SECTION EC
ENGINE CONTROL SYSTEM

CONTENTS

APPLICATION NOTICE 21
How to Check Vehicle Type 21

CR (WITH EURO-OBD)

INDEX FOR DTC 22
DTC No. Index 22
Alphabetical Index 24
PRECAUTIONS 26
Precautions for Supplemental Restraint System (SRS) “AIR BAG” and “SEAT BELT PRE-TENSIONER” 26
Maintenance Information 26
Precautions for Procedures without Cowl Top Cover.. 26
On Board Diagnostic (OBD) System of Engine 26
Precaution 27
PREPARATION 31
Special Service Tools 31
Commercial Service Tools 32
ENGINE CONTROL SYSTEM 33
System Diagram 33
Multiport Fuel Injection (MFI) System 34
Electronic Ignition (EI) System 36
Fuel Cut Control (at No Load and High Engine Speed) 36
AIR CONDITIONING CUT CONTROL 38
Input/Output Signal Chart 38
CAN COMMUNICATION 39
System Description 39
EVAPORATIVE EMISSION SYSTEM 40
Description 40
Component Inspection 43
NATS (NISSAN ANTI-THEFT SYSTEM) 44
Description 44
POSITIVE CRANKCASE VENTILATION 45
Description 45
Component Inspection 45
ON BOARD DIAGNOSTIC (OBD) SYSTEM 47
Introduction 47
Two Trip Detection Logic 47
Emission-related Diagnostic Information 48
Malfunction Indicator (MI) 58
OBD System Operation Chart 61
BASIC SERVICE PROCEDURE 66
Basic Inspection 66
Idle Speed Check 69
Accelerator Pedal Released Position Learning 69
Throttle Valve Closed Position Learning 69
Idle Air Volume Learning 69
Fuel Pressure Check 71
TROUBLE DIAGNOSIS 74
Trouble Diagnosis Introduction 74
DTC Inspection Priority Chart 80
Fail-Safe Chart 81
Symptom Matrix Chart 82
Engine Control Component Parts Location 86
Vacuum Hose Drawing 92
Circuit Diagram 93
ECM Harness Connector Terminal Layout 95
ECM Terminals and Reference Value 95
CONSULT-II Function (ENGINE) 102
Generic Scan Tool (GST) Function 111
CONSULT-II Reference Value in Data Monitor Mode . 112
Major Sensor Reference Graph in Data Monitor Mode 115
TROUBLE DIAGNOSIS - SPECIFICATION VALUE 117
Description 117
Testing Condition 117
Inspection Procedure 117
Diagnostic Procedure 118
TROUBLE DIAGNOSIS FOR INTERMITTENT INCIDENT 127
Description 127
Diagnostic Procedure 127
POWER SUPPLY AND GROUND CIRCUIT 128
Wiring Diagram 128
Diagnostic Procedure 129
Ground Inspection 133

DTC U1001 CAN COMMUNICATION LINE 134
Description 134
On Board Diagnosis Logic 134
DTC Confirmation Procedure 134
Wiring Diagram 135
Diagnostic Procedure 136
DTC U1010 CAN COMMUNICATION 137
Description 137
On Board Diagnosis Logic 137
DTC Confirmation Procedure 137
Diagnostic Procedure 138
DTC P0011 IVT CONTROL 139
Description 139
CONSULT-II Reference Value in Data Monitor Mode . 139
On Board Diagnosis Logic 140
DTC Confirmation Procedure 140
Diagnostic Procedure 141
Component Inspection 142
Removal and Installation 142
DTC P0031, P0032 HO2S1 HEATER 143
Description 143
CONSULT-II Reference Value in Data Monitor Mode . 143
On Board Diagnosis Logic 143
DTC Confirmation Procedure 144
Wiring Diagram 145
Diagnostic Procedure 146
Component Inspection 148
Removal and Installation 148
DTC P0037, P0038 HO2S2 HEATER 149
Description 149
CONSULT-II Reference Value in Data Monitor Mode . 149
On Board Diagnosis Logic 149
DTC Confirmation Procedure 149
Wiring Diagram 151
Diagnostic Procedure 152
Component Inspection 154
Removal and Installation 154
DTC P0107, P0108 MANIFOLD ABSOLUTE PRESSURE SENSOR 155
Component Description 155
On Board Diagnosis Logic 155
DTC Confirmation Procedure 155
Wiring Diagram 156
Diagnostic Procedure 157
Component Inspection 159
Removal and Installation 160
DTC P0112, P0113 IAT SENSOR 161
Component Description 161
On Board Diagnosis Logic 161
DTC Confirmation Procedure 162
Wiring Diagram 163
Diagnostic Procedure 164
Component Inspection 165
Removal and Installation 165
DTC P0117, P0118 ECT SENSOR 166
Component Description 166
On Board Diagnosis Logic 166
DTC Confirmation Procedure 167
Wiring Diagram 168
Diagnostic Procedure 169
Component Inspection 170
Removal and Installation 170
DTC P0122, P0123 TP SENSOR 171
Component Description 171
CONSULT-II Reference Value in Data Monitor Mode . 171
On Board Diagnosis Logic 171
DTC Confirmation Procedure 172
Wiring Diagram 173
Diagnostic Procedure 174
Component Inspection 177
Removal and Installation 177
DTC P0132 HO2S1 178
Component Description 178
CONSULT-II Reference Value in Data Monitor Mode . 178
On Board Diagnosis Logic 178
DTC Confirmation Procedure 179
Wiring Diagram 180
Diagnostic Procedure 181
Component Inspection 183
Removal and Installation 184
DTC P0133 HO2S1 185
Component Description 185
CONSULT-II Reference Value in Data Monitor Mode . 185
On Board Diagnosis Logic 185
DTC Confirmation Procedure 186
Overall Function Check 187
Wiring Diagram 188
Diagnostic Procedure 189
Component Inspection 193
Removal and Installation 194
DTC P0134 HO2S1 195
Component Description 195
CONSULT-II Reference Value in Data Monitor Mode . 195
On Board Diagnosis Logic 195
DTC Confirmation Procedure 196
Overall Function Check 197
Wiring Diagram 198
Diagnostic Procedure 199
Component Inspection 201
Removal and Installation 202
DTC P0138 HO2S2 203
Component Description 203
CONSULT-II Reference Value in Data Monitor Mode . 203
On Board Diagnosis Logic 203
DTC Confirmation Procedure 204
Wiring Diagram 205
Diagnostic Procedure 206
Component Inspection 208
Removal and Installation 209

DTC P0139 HO2S2 210
Component Description 210
CONSULT-II Reference Value in Data Monitor Mode . 210
On Board Diagnosis Logic 210
DTC Confirmation Procedure 211
Overall Function Check 212
Wiring Diagram 213
Diagnostic Procedure 214
Component Inspection 216
Removal and Installation 217
DTC P0171 FUEL INJECTION SYSTEM FUNCTION 218
On Board Diagnosis Logic 218
DTC Confirmation Procedure 218
Wiring Diagram 220
Diagnostic Procedure 222
DTC P0172 FUEL INJECTION SYSTEM FUNCTION 226
On Board Diagnosis Logic 226
DTC Confirmation Procedure 226
Wiring Diagram 228
Diagnostic Procedure 230
DTC P0222, P0223 TP SENSOR 233
Component Description 233
CONSULT-II Reference Value in Data Monitor Mode . 233
On Board Diagnosis Logic 233
DTC Confirmation Procedure 234
Wiring Diagram 235
Diagnostic Procedure 236
Component Inspection 239
Removal and Installation 239
DTC P0300 - P0304 MULTIPLE CYLINDER MISFIRE, NO. 1 - 4 CYLINDER MISFIRE 240
On Board Diagnosis Logic 240
DTC Confirmation Procedure 240
Diagnostic Procedure 241
DTC P0327, P0328 KS 246
Component Description 246
On Board Diagnosis Logic 246
DTC Confirmation Procedure 246
Wiring Diagram 247
Diagnostic Procedure 248
Component Inspection 249
Removal and Installation 249
DTC P0335 CKP SENSOR (POS) 250
Component Description 250
CONSULT-II Reference Value in Data Monitor Mode . 250
On Board Diagnosis Logic 250
DTC Confirmation Procedure 250
Wiring Diagram 252
Diagnostic Procedure 254
Component Inspection 256
Removal and Installation 256
DTC P0340 CMP SENSOR (PHASE) 257
Component Description 257
On Board Diagnosis Logic 257
DTC Confirmation Procedure 257
Wiring Diagram 259
Diagnostic Procedure 260
Component Inspection 263
Removal and Installation 263
DTC P0420 THREE WAY CATALYST FUNCTION . 264
On Board Diagnosis Logic 264
DTC Confirmation Procedure 264
Overall Function Check 265
Diagnostic Procedure 266
DTC P0444 EVAP CANISTER PURGE VOLUME CONTROL SOLENOID VALVE 270
Description 270
CONSULT-II Reference Value in Data Monitor Mode . 270
On Board Diagnosis Logic 270
DTC Confirmation Procedure 271
Wiring Diagram 272
Diagnostic Procedure 274
Component Inspection 275
Removal and Installation 276
DTC P0500 VSS 277
Description 277
On Board Diagnosis Logic 277
DTC Confirmation Procedure 277
Overall Function Check 278
Diagnostic Procedure 278
DTC P0605 ECM 279
Component Description 279
On Board Diagnosis Logic 279
DTC Confirmation Procedure 279
Diagnostic Procedure 280
DTC P1065 ECM POWER SUPPLY 282
Component Description 282
On Board Diagnosis Logic 282
DTC Confirmation Procedure 282
Wiring Diagram 283
Diagnostic Procedure 284
DTC P1111 IVT CONTROL SOLENOID VALVE 286
Component Description 286
CONSULT-II Reference Value in Data Monitor Mode . 286
On Board Diagnosis Logic 286
DTC Confirmation Procedure 286
Wiring Diagram 287
Diagnostic Procedure 289
Component Inspection 290
Removal and Installation 290
DTC P1121 ELECTRIC THROTTLE CONTROL ACTUATOR 291
Component Description 291
On Board Diagnosis Logic 291
DTC Confirmation Procedure 291
Diagnostic Procedure 292
DTC P1122 ELECTRIC THROTTLE CONTROL FUNCTION 293
Description 293
On Board Diagnosis Logic 293
DTC Confirmation Procedure 293
Wiring Diagram 294
Diagnostic Procedure 295

Component Inspection 298
Removal and Installation 298
DTC P1124, P1126 THROTTLE CONTROL MOTOR RELAY 299
Component Description 299
CONSULT-II Reference Value in Data Monitor Mode . 299
On Board Diagnosis Logic 299
DTC Confirmation Procedure 299
Wiring Diagram 301
Diagnostic Procedure 302
DTC P1128 THROTTLE CONTROL MOTOR 305
Component Description 305
On Board Diagnosis Logic 305
DTC Confirmation Procedure 305
Wiring Diagram 306
Diagnostic Procedure 307
Component Inspection 308
Removal and Installation 309
DTC P1143 HO2S1 310
Component Description 310
CONSULT-II Reference Value in Data Monitor Mode . 310
On Board Diagnosis Logic 310
DTC Confirmation Procedure 311
Overall Function Check 312
Diagnostic Procedure 312
Component Inspection 314
Removal and Installation 315
DTC P1144 HO2S1 316
Component Description 316
CONSULT-II Reference Value in Data Monitor Mode . 316
On Board Diagnosis Logic 316
DTC Confirmation Procedure 317
Overall Function Check 318
Diagnostic Procedure 318
Component Inspection 320
Removal and Installation 321
DTC P1146 HO2S2 322
Component Description 322
CONSULT-II Reference Value in Data Monitor Mode . 322
On Board Diagnosis Logic 322
DTC Confirmation Procedure 322
Overall Function Check 324
Wiring Diagram 325
Diagnostic Procedure 326
Component Inspection 328
Removal and Installation 329
DTC P1147 HO2S2 330
Component Description 330
CONSULT-II Reference Value in Data Monitor Mode . 330
On Board Diagnosis Logic 330
DTC Confirmation Procedure 331
Overall Function Check 332
Wiring Diagram 333
Diagnostic Procedure 334
Component Inspection 336
Removal and Installation 337
DTC P1171 INTAKE ERROR 338
On Board Diagnosis Logic 338
DTC Confirmation Procedure 338
Wiring Diagram 339
Diagnostic Procedure 340
DTC P1211 TCS CONTROL UNIT 343
Description 343
On Board Diagnosis Logic 343
DTC Confirmation Procedure 343
Diagnostic Procedure 343
DTC P1212 TCS COMMUNICATION LINE 344
Description 344
On Board Diagnosis Logic 344
DTC Confirmation Procedure 344
Diagnostic Procedure 344
DTC P1217 ENGINE OVER TEMPERATURE 345
System Description 345
CONSULT-II Reference Value in Data Monitor Mode . 346
On Board Diagnosis Logic 346
Overall Function Check 347
Wiring Diagram 349
Diagnostic Procedure 351
Main 12 Causes of Overheating 357
Component Inspection 358
DTC P1225 TP SENSOR 359
Component Description 359
On Board Diagnosis Logic 359
DTC Confirmation Procedure 359
Diagnostic Procedure 360
Removal and Installation 360
DTC P1226 TP SENSOR 361
Component Description 361
On Board Diagnosis Logic 361
DTC Confirmation Procedure 361
Diagnostic Procedure 362
Removal and Installation 362
DTC P1229 SENSOR POWER SUPPLY 363
On Board Diagnosis Logic 363
DTC Confirmation Procedure 363
Wiring Diagram 364
Diagnostic Procedure 368
DTC P1706 PNP SWITCH 371
Component Description 371
CONSULT-II Reference Value in Data Monitor Mode . 371
On Board Diagnosis Logic 371
DTC Confirmation Procedure 371
Overall Function Check 372
Wiring Diagram 373
Diagnostic Procedure 374
DTC P1805 BRAKE SWITCH 377
Description 377
CONSULT-II Reference Value in Data Monitor Mode . 377
On Board Diagnosis Logic 377
DTC Confirmation Procedure 377

Wiring Diagram 379
Diagnostic Procedure 380
Component Inspection 382
DTC P2122, P2123 APP SENSOR 383
Component Description 383
CONSULT-II Reference Value in Data Monitor Mode . 383
On Board Diagnosis Logic 383
DTC Confirmation Procedure 384
Wiring Diagram 385
Diagnostic Procedure 388
Component Inspection 390
Removal and Installation 391
DTC P2127, P2128 APP SENSOR 392
Component Description 392
CONSULT-II Reference Value in Data Monitor Mode . 392
On Board Diagnosis Logic 392
DTC Confirmation Procedure 393
Wiring Diagram 394
Diagnostic Procedure 397
Component Inspection 400
Removal and Installation 401
DTC P2135 TP SENSOR 402
Component Description 402
CONSULT-II Reference Value in Data Monitor Mode . 402
On Board Diagnosis Logic 402
DTC Confirmation Procedure 403
Wiring Diagram 404
Diagnostic Procedure 405
Component Inspection 408
Removal and Installation 408
DTC P2138 APP SENSOR 409
Component Description 409
CONSULT-II Reference Value in Data Monitor Mode . 409
On Board Diagnosis Logic 409
DTC Confirmation Procedure 410
Wiring Diagram 411
Diagnostic Procedure 414
Component Inspection 418
Removal and Installation 418
ELECTRICAL LOAD SIGNAL 419
Description 419
CONSULT-II Reference Value in Data Monitor Mode . 419
Diagnostic Procedure 419
FUEL INJECTOR 421
Component Description 421
CONSULT-II Reference Value in Data Monitor Mode . 421
Wiring Diagram 422
Diagnostic Procedure 423
Component Inspection 426
Removal and Installation 426
FUEL PUMP 427
Description 427
CONSULT-II Reference Value in Data Monitor Mode . 427
Wiring Diagram 428
Diagnostic Procedure 429
Component Inspection 431
Removal and Installation 432
IGNITION SIGNAL 433
Component Description 433
Wiring Diagram 434
Diagnostic Procedure 437
Component Inspection 441
Removal and Installation 442
REFRIGERANT PRESSURE SENSOR 443
Component Description 443
Wiring Diagram 444
Diagnostic Procedure 445
Removal and Installation 447
MI & DATA LINK CONNECTORS 448
Wiring Diagram 448
SERVICE DATA AND SPECIFICATIONS (SDS) ... 449
Fuel Pressure 449
Idle Speed 449
Calculated Load Value 449
Manifold Absolute Pressure Sensor 449
Intake Air Temperature Sensor 449
Engine Coolant Temperature Sensor 449
Knock Sensor 449
Crankshaft Position Sensor (POS) 449
Camshaft Position Sensor (PHASE) 449
Heated Oxygen Sensor 1 Heater 449
Heated Oxygen Sensor 2 Heater 449
Intake Valve Timing Control Solenoid Valve 449
Throttle Control Motor 450
Fuel Injector 450
Fuel Pump 450

CR (WITHOUT EURO-OBD)

INDEX FOR DTC 451
DTC No. Index 451
Alphabetical Index 453
PRECAUTIONS 455
Precautions for Supplemental Restraint System (SRS) “AIR BAG” and “SEAT BELT PRE-TENSIONER” 455
Maintenance Information 455
Precautions for Procedures without Cowl Top Cover 455
On Board Diagnostic (OBD) System of Engine ... 455
Precaution 456
PREPARATION 460
Special Service Tools 460
Commercial Service Tools 461
ENGINE CONTROL SYSTEM 462
System Diagram 462
Multiport Fuel Injection (MFI) System 463
Electronic Ignition (EI) System 465
Fuel Cut Control (at No Load and High Engine Speed) 465
AIR CONDITIONING CUT CONTROL 467
Input/Output Signal Chart 467

CAN COMMUNICATION 468
System Description 468
EVAPORATIVE EMISSION SYSTEM 469
Description 469
Component Inspection 472
NATS (NISSAN ANTI-THEFT SYSTEM) 473
Description 473
POSITIVE CRANKCASE VENTILATION 474
Description 474
Component Inspection 474
ON BOARD DIAGNOSTIC (OBD) SYSTEM 476
Introduction 476
Two Trip Detection Logic 476
Emission-related Diagnostic Information 476
Malfunction Indicator (MI) 479
BASIC SERVICE PROCEDURE 483
Basic Inspection 483
Idle Speed Check 486
Accelerator Pedal Released Position Learning ... 486
Throttle Valve Closed Position Learning 486
Idle Air Volume Learning 486
Fuel Pressure Check 488
TROUBLE DIAGNOSIS 491
Trouble Diagnosis Introduction 491
DTC Inspection Priority Chart 497
Fail-Safe Chart 498
Symptom Matrix Chart 499
Engine Control Component Parts Location 503
Vacuum Hose Drawing 509
Circuit Diagram 510
ECM Harness Connector Terminal Layout 512
ECM Terminals and Reference Value 512
CONSULT-II Function (ENGINE) 519
CONSULT-II Reference Value in Data Monitor Mode .527
Major Sensor Reference Graph in Data Monitor Mode 530
TROUBLE DIAGNOSIS - SPECIFICATION VALUE 532
Description 532
Testing Condition 532
Inspection Procedure 532
Diagnostic Procedure 533
TROUBLE DIAGNOSIS FOR INTERMITTENT INCIDENT 542
Description 542
Diagnostic Procedure 542
POWER SUPPLY AND GROUND CIRCUIT 543
Wiring Diagram 543
Diagnostic Procedure 544
Ground Inspection 548
DTC U1001 CAN COMMUNICATION LINE 549
Description 549
On Board Diagnosis Logic 549
DTC Confirmation Procedure 549
Wiring Diagram 550
Diagnostic Procedure 551
DTC U1010 CAN COMMUNICATION 552
Description 552
On Board Diagnosis Logic 552
DTC Confirmation Procedure 552
Diagnostic Procedure 553
DTC P0011 IVT CONTROL 554
Description 554
CONSULT-II Reference Value in Data Monitor Mode .554
On Board Diagnosis Logic 555
DTC Confirmation Procedure 555
Overall Function Check 556
Diagnostic Procedure 556
Component Inspection 557
Removal and Installation 558
DTC P0107, P0108 MANIFOLD ABSOLUTE PRESSURE SENSOR 559
Component Description 559
On Board Diagnosis Logic 559
DTC Confirmation Procedure 559
Wiring Diagram 560
Diagnostic Procedure 561
Component Inspection 563
Removal and Installation 564
DTC P0117, P0118 ECT SENSOR 565
Component Description 565
On Board Diagnosis Logic 565
DTC Confirmation Procedure 566
Wiring Diagram 567
Diagnostic Procedure 568
Component Inspection 569
Removal and Installation 569
DTC P0122, P0123 TP SENSOR 570
Component Description 570
CONSULT-II Reference Value in Data Monitor Mode .570
On Board Diagnosis Logic 570
DTC Confirmation Procedure 571
Wiring Diagram 572
Diagnostic Procedure 573
Component Inspection 576
Removal and Installation 576
DTC P0132 HO2S1 577
Component Description 577
CONSULT-II Reference Value in Data Monitor Mode .577
On Board Diagnosis Logic 577
DTC Confirmation Procedure 578
Wiring Diagram 579
Diagnostic Procedure 580
Component Inspection 582
Removal and Installation 583
DTC P0134 HO2S1 584
Component Description 584
CONSULT-II Reference Value in Data Monitor Mode .584
On Board Diagnosis Logic 584
Overall Function Check 585
Wiring Diagram 586
Diagnostic Procedure 587
Component Inspection 589
Removal and Installation 590

DTC P0138 HO2S2 591
Component Description 591
CONSULT-II Reference Value in Data Monitor Mode . 591
On Board Diagnosis Logic 591
DTC Confirmation Procedure 591
Wiring Diagram 593
Diagnostic Procedure 594
Component Inspection 596
Removal and Installation 597
DTC P0222, P0223 TP SENSOR 598
Component Description 598
CONSULT-II Reference Value in Data Monitor Mode . 598
On Board Diagnosis Logic 598
DTC Confirmation Procedure 598
Wiring Diagram 600
Diagnostic Procedure 601
Component Inspection 604
Removal and Installation 604
DTC P0327, P0328 KS 605
Component Description 605
On Board Diagnosis Logic 605
DTC Confirmation Procedure 605
Wiring Diagram 606
Diagnostic Procedure 607
Component Inspection 608
Removal and Installation 608
DTC P0335 CKP SENSOR (POS) 609
Component Description 609
CONSULT-II Reference Value in Data Monitor Mode . 609
On Board Diagnosis Logic 609
DTC Confirmation Procedure 609
Wiring Diagram 611
Diagnostic Procedure 613
Component Inspection 615
Removal and Installation 615
DTC P0340 CMP SENSOR (PHASE) 616
Component Description 616
On Board Diagnosis Logic 616
DTC Confirmation Procedure 616
Wiring Diagram 618
Diagnostic Procedure 619
Component Inspection 622
Removal and Installation 622
DTC P0605 ECM 623
Component Description 623
On Board Diagnosis Logic 623
DTC Confirmation Procedure 623
Diagnostic Procedure 625
DTC P1065 ECM POWER SUPPLY 626
Component Description 626
On Board Diagnosis Logic 626
DTC Confirmation Procedure 626
Wiring Diagram 627
Diagnostic Procedure 628
DTC P1111 IVT CONTROL SOLENOID VALVE ... 630
Component Description 630
CONSULT-II Reference Value in Data Monitor Mode . 630
On Board Diagnosis Logic 630
DTC Confirmation Procedure 630
Wiring Diagram 631
Diagnostic Procedure 633
Component Inspection 634
Removal and Installation 634
DTC P1121 ELECTRIC THROTTLE CONTROL ACTUATOR 635
Component Description 635
On Board Diagnosis Logic 635
DTC Confirmation Procedure 635
Diagnostic Procedure 636
DTC P1122 ELECTRIC THROTTLE CONTROL FUNCTION 637
Description 637
On Board Diagnosis Logic 637
DTC Confirmation Procedure 637
Wiring Diagram 638
Diagnostic Procedure 639
Component Inspection 642
Removal and Installation 642
DTC P1124, P1126 THROTTLE CONTROL MOTOR RELAY 643
Component Description 643
CONSULT-II Reference Value in Data Monitor Mode . 643
On Board Diagnosis Logic 643
DTC Confirmation Procedure 643
Wiring Diagram 645
Diagnostic Procedure 646
DTC P1128 THROTTLE CONTROL MOTOR 649
Component Description 649
On Board Diagnosis Logic 649
DTC Confirmation Procedure 649
Wiring Diagram 650
Diagnostic Procedure 651
Component Inspection 652
Removal and Installation 653
DTC P1171 INTAKE ERROR 654
On Board Diagnosis Logic 654
DTC Confirmation Procedure 654
Wiring Diagram 656
Diagnostic Procedure 657
DTC P1211 TCS CONTROL UNIT 660
Description 660
On Board Diagnosis Logic 660
DTC Confirmation Procedure 660
Diagnostic Procedure 660
DTC P1212 TCS COMMUNICATION LINE 661
Description 661
On Board Diagnosis Logic 661
DTC Confirmation Procedure 661
Diagnostic Procedure 661
DTC P1217 ENGINE OVER TEMPERATURE 662
System Description 662
CONSULT-II Reference Value in Data Monitor Mode . 663

On Board Diagnosis Logic 663
Overall Function Check 664
Wiring Diagram 666
Diagnostic Procedure 668
Main 12 Causes of Overheating 674
Component Inspection 675
DTC P1225 TP SENSOR 676
Component Description 676
On Board Diagnosis Logic 676
DTC Confirmation Procedure 676
Diagnostic Procedure 677
Removal and Installation 677
DTC P1226 TP SENSOR 678
Component Description 678
On Board Diagnosis Logic 678
DTC Confirmation Procedure 678
Diagnostic Procedure 679
Removal and Installation 679
DTC P1229 SENSOR POWER SUPPLY 680
On Board Diagnosis Logic 680
DTC Confirmation Procedure 680
Wiring Diagram 681
Diagnostic Procedure 685
DTC P1706 PNP SWITCH 688
Component Description 688
CONSULT-II Reference Value in Data Monitor Mode 688
On Board Diagnosis Logic 688
Overall Function Check 688
Wiring Diagram 689
Diagnostic Procedure 690
DTC P1805 BRAKE SWITCH 693
Description 693
CONSULT-II Reference Value in Data Monitor Mode 693
On Board Diagnosis Logic 693
DTC Confirmation Procedure 693
Wiring Diagram 695
Diagnostic Procedure 696
Component Inspection 698
DTC P2122, P2123 APP SENSOR 699
Component Description 699
CONSULT-II Reference Value in Data Monitor Mode 699
On Board Diagnosis Logic 699
DTC Confirmation Procedure 699
Wiring Diagram 701
Diagnostic Procedure 704
Component Inspection 706
Removal and Installation 707
DTC P2127, P2128 APP SENSOR 708
Component Description 708
CONSULT-II Reference Value in Data Monitor Mode 708
On Board Diagnosis Logic 708
DTC Confirmation Procedure 708
Wiring Diagram 710
Diagnostic Procedure 713
Component Inspection 716
Removal and Installation 717
DTC P2135 TP SENSOR 718
Component Description 718
CONSULT-II Reference Value in Data Monitor Mode 718
On Board Diagnosis Logic 718
DTC Confirmation Procedure 718
Wiring Diagram 720
Diagnostic Procedure 721
Component Inspection 724
Removal and Installation 724
DTC P2138 APP SENSOR 725
Component Description 725
CONSULT-II Reference Value in Data Monitor Mode 725
On Board Diagnosis Logic 725
DTC Confirmation Procedure 726
Wiring Diagram 727
Diagnostic Procedure 730
Component Inspection 734
Removal and Installation 734
ELECTRICAL LOAD SIGNAL 735
Description 735
CONSULT-II Reference Value in Data Monitor Mode 735
Diagnostic Procedure 735
EVAP CANISTER PURGE VOLUME CONTROL SOLENOID VALVE 737
Description 737
CONSULT-II Reference Value in Data Monitor Mode 737
Wiring Diagram 738
Diagnostic Procedure 740
Component Inspection 743
Removal and Installation 743
FUEL INJECTOR 744
Component Description 744
CONSULT-II Reference Value in Data Monitor Mode 744
Wiring Diagram 745
Diagnostic Procedure 746
Component Inspection 749
Removal and Installation 749
FUEL PUMP 750
Description 750
CONSULT-II Reference Value in Data Monitor Mode 750
Wiring Diagram 751
Diagnostic Procedure 752
Component Inspection 754
Removal and Installation 755
HO2S1 756
Component Description 756
CONSULT-II Reference Value in Data Monitor Mode 756
Wiring Diagram 757
Diagnostic Procedure 759

Component Inspection 760
Removal and Installation 762
HO2S1 HEATER 763
Description 763
CONSULT-II Reference Value in Data Monitor Mode . 763
Wiring Diagram 764
Diagnostic Procedure 765
Component Inspection 767
Removal and Installation 767
HO2S2 768
Component Description 768
CONSULT-II Reference Value in Data Monitor Mode . 768
Wiring Diagram 769
Diagnostic Procedure 770
Component Inspection 772
Removal and Installation 773
HO2S2 HEATER 774
Description 774
CONSULT-II Reference Value in Data Monitor Mode . 774
Wiring Diagram 775
Diagnostic Procedure 776
Component Inspection 778
Removal and Installation 778
IAT SENSOR 779
Component Description 779
Wiring Diagram 780
Diagnostic Procedure 781
Component Inspection 783
Removal and Installation 783
IGNITION SIGNAL 784
Component Description 784
Wiring Diagram 785
Diagnostic Procedure 788
Component Inspection 792
Removal and Installation 793
REFRIGERANT PRESSURE SENSOR 794
Component Description 794
Wiring Diagram 795
Diagnostic Procedure 796
Removal and Installation 798
VSS 799
Description 799
Diagnostic Procedure 799
MI & DATA LINK CONNECTORS 800
Wiring Diagram 800
SERVICE DATA AND SPECIFICATIONS (SDS) ... 801
Fuel Pressure 801
Idle Speed 801
Manifold Absolute Pressure Sensor 801
Intake Air Temperature Sensor 801
Engine Coolant Temperature Sensor 801
Knock Sensor 801
Crankshaft Position Sensor (POS) 801
Camshaft Position Sensor (PHASE) 801
Heated Oxygen Sensor 1 Heater 801
Heated Oxygen Sensor 2 Heater 801
Intake Valve Timing Control Solenoid Valve 801
Throttle Control Motor 801
Fuel Injector 801
Fuel Pump 802

HR (WITH EURO-OBD)

INDEX FOR DTC 803
DTC No. Index 803
Alphabetical Index 806
PRECAUTIONS 809
Precautions for Supplemental Restraint System (SRS) “AIR BAG” and “SEAT BELT PRE-TENSIONER” 809
Maintenance Information 809
Precautions for Procedures without Cowl Top Cover 809
On Board Diagnostic (OBD) System of Engine and A/T 809
Precaution 810
PREPARATION 814
Special Service Tools 814
Commercial Service Tools 815
ENGINE CONTROL SYSTEM 816
System Diagram 816
Multiport Fuel Injection (MFI) System 817
Electronic Ignition (EI) System 819
Fuel Cut Control (at No Load and High Engine Speed) 820
AIR CONDITIONING CUT CONTROL 821
Input/Output Signal Chart 821
System Description 821
CAN COMMUNICATION 822
System Description 822
EVAPORATIVE EMISSION SYSTEM 823
Description 823
Component Inspection 826
NATS (NISSAN ANTI-THEFT SYSTEM) 827
Description 827
POSITIVE CRANKCASE VENTILATION 828
Description 828
Component Inspection 828
ON BOARD DIAGNOSTIC (OBD) SYSTEM 830
Introduction 830
Two Trip Detection Logic 830
Emission-related Diagnostic Information 831
Malfunction Indicator (MI) 843
OBD System Operation Chart 846
BASIC SERVICE PROCEDURE 851
Basic Inspection 851
Idle Speed and Ignition Timing Check 856
Accelerator Pedal Released Position Learning ... 857
Throttle Valve Closed Position Learning 857
Idle Air Volume Learning 858
Fuel Pressure Check 860
TROUBLE DIAGNOSIS 863
Trouble Diagnosis Introduction 863
DTC Inspection Priority Chart 869
Fail-Safe Chart 870
Symptom Matrix Chart 871

Engine Control Component Parts Location 875
Vacuum Hose Drawing 880
Circuit Diagram 881
ECM Harness Connector Terminal Layout 883
ECM Terminals and Reference Value 883
CONSULT-II Function (ENGINE) 891
Generic Scan Tool (GST) Function 900
CONSULT-II Reference Value in Data Monitor 902
Major Sensor Reference Graph in Data Monitor Mode 905
TROUBLE DIAGNOSIS - SPECIFICATION VALUE 907
Description 907
Testing Condition 907
Inspection Procedure 907
Diagnostic Procedure 908
TROUBLE DIAGNOSIS FOR INTERMITTENT INCI-DENT 917
Description 917
Diagnostic Procedure 917
POWER SUPPLY AND GROUND CIRCUIT 918
Wiring Diagram 918
Diagnostic Procedure 919
Ground Inspection 924
DTC U1000, U1001 CAN COMMUNICATION LINE 925
Description 925
On Board Diagnosis Logic 925
DTC Confirmation Procedure 925
Wiring Diagram 926
Diagnostic Procedure 927
DTC U1010 CAN COMMUNICATION 928
Description 928
On Board Diagnosis Logic 928
DTC Confirmation Procedure 928
Diagnostic Procedure 929
DTC P0011 IVT CONTROL 930
Description 930
CONSULT-II Reference Value in Data Monitor Mode .930
On Board Diagnosis Logic 931
DTC Confirmation Procedure 931
Diagnostic Procedure 932
Component Inspection 933
Removal and Installation 934
DTC P0102, P0103 MAF SENSOR 935
Component Description 935
CONSULT-II Reference Value in Data Monitor Mode .935
On Board Diagnosis Logic 935
DTC Confirmation Procedure 936
Wiring Diagram 937
Diagnostic Procedure 938
Component Inspection 940
Removal and Installation 941
DTC P0112, P0113 IAT SENSOR 942
Component Description 942
On Board Diagnosis Logic 942
DTC Confirmation Procedure 942
Wiring Diagram 944
Diagnostic Procedure 945
Component Inspection 946
Removal and Installation 946
DTC P0117, P0118 ECT SENSOR 947
Component Description 947
On Board Diagnosis Logic 947
DTC Confirmation Procedure 948
Wiring Diagram 949
Diagnostic Procedure 950
Component Inspection 951
Removal and Installation 952
DTC P0122, P0123 TP SENSOR 953
Component Description 953
CONSULT-II Reference Value in Data Monitor Mode .953
On Board Diagnosis Logic 953
DTC Confirmation Procedure 954
Wiring Diagram 955
Diagnostic Procedure 956
Component Inspection 958
Removal and Installation 958
DTC P0132 HO2S1 959
Component Description 959
CONSULT-II Reference Value in Data Monitor Mode .959
On Board Diagnosis Logic 959
DTC Confirmation Procedure 960
Wiring Diagram 961
Diagnostic Procedure 962
Component Inspection 965
Removal and Installation 966
DTC P0133 HO2S1 967
Component Description 967
CONSULT-II Reference Value in Data Monitor Mode .967
On Board Diagnosis Logic 967
DTC Confirmation Procedure 968
Overall Function Check 969
Wiring Diagram 970
Diagnostic Procedure 971
Component Inspection 975
Removal and Installation 976
DTC P0134 HO2S1 977
Component Description 977
CONSULT-II Reference Value in Data Monitor Mode .977
On Board Diagnosis Logic 977
DTC Confirmation Procedure 978
Overall Function Check 979
Wiring Diagram 980
Diagnostic Procedure 981
Component Inspection 983
Removal and Installation 984
DTC P0135 HO2S1 HEATER 985
Description 985
CONSULT-II Reference Value in Data Monitor Mode .985
On Board Diagnosis Logic 985
DTC Confirmation Procedure 986
Wiring Diagram 987

Diagnostic Procedure 988
Component Inspection 990
Removal and Installation 990
DTC P0138 HO2S2 991
Component Description 991
CONSULT-II Reference Value in Data Monitor Mode . 991
On Board Diagnosis Logic 991
DTC Confirmation Procedure 992
Wiring Diagram 993
Diagnostic Procedure 994
Component Inspection 995
Removal and Installation 997
DTC P0139 HO2S2 998
Component Description 998
CONSULT-II Reference Value in Data Monitor Mode . 998
On Board Diagnosis Logic 998
DTC Confirmation Procedure 999
Overall Function Check 1000
Wiring Diagram 1001
Diagnostic Procedure 1002
Component Inspection 1004
Removal and Installation 1005
DTC P0141 HO2S2 HEATER 1006
Description 1006
CONSULT-II Reference Value in Data Monitor Mode 1006
On Board Diagnosis Logic 1006
DTC Confirmation Procedure 1007
Wiring Diagram 1008
Diagnostic Procedure 1009
Component Inspection 1011
Removal and Installation 1011
DTC P0171 FUEL INJECTION SYSTEM FUNCTION 1012
On Board Diagnosis Logic 1012
DTC Confirmation Procedure 1012
Wiring Diagram 1014
Diagnostic Procedure 1016
DTC P0172 FUEL INJECTION SYSTEM FUNCTION 1019
On Board Diagnosis Logic 1019
DTC Confirmation Procedure 1019
Wiring Diagram 1021
Diagnostic Procedure 1023
DTC P0222, P0223 TP SENSOR 1026
Component Description 1026
CONSULT-II Reference Value in Data Monitor Mode 1026
On Board Diagnosis Logic 1026
DTC Confirmation Procedure 1027
Wiring Diagram 1028
Diagnostic Procedure 1029
Component Inspection 1031
Removal and Installation 1031
DTC P0300 - P0304 MULTIPLE CYLINDER MISFIRE, NO. 1 - 4 CYLINDER MISFIRE 1032
On Board Diagnosis Logic 1032
DTC Confirmation Procedure 1033
Diagnostic Procedure 1033
DTC P0327, P0328 KS 1038
Component Description 1038
On Board Diagnosis Logic 1038
DTC Confirmation Procedure 1038
Wiring Diagram 1039
Diagnostic Procedure 1040
Component Inspection 1041
Removal and Installation 1041
DTC P0335 CKP SENSOR (POS) 1042
Component Description 1042
CONSULT-II Reference Value in Data Monitor Mode 1042
On Board Diagnosis Logic 1042
DTC Confirmation Procedure 1043
Wiring Diagram 1044
Diagnostic Procedure 1046
Component Inspection 1048
Removal and Installation 1048
DTC P0340 CMP SENSOR (PHASE) 1049
Component Description 1049
On Board Diagnosis Logic 1049
DTC Confirmation Procedure 1050
Wiring Diagram 1051
Diagnostic Procedure 1052
Component Inspection 1054
Removal and Installation 1055
DTC P0420 THREE WAY CATALYST FUNCTION 1056
On Board Diagnosis Logic 1056
DTC Confirmation Procedure 1056
Overall Function Check 1057
Diagnostic Procedure 1059
DTC P0444 EVAP CANISTER PURGE VOLUME CONTROL SOLENOID VALVE 1063
Description 1063
CONSULT-II Reference Value in Data Monitor Mode 1063
On Board Diagnosis Logic 1063
DTC Confirmation Procedure 1064
Wiring Diagram 1065
Diagnostic Procedure 1067
Component Inspection 1068
Removal and Installation 1069
DTC P0500 VSS 1070
Description 1070
On Board Diagnosis Logic 1070
DTC Confirmation Procedure 1070
Overall Function Check 1071
Diagnostic Procedure 1071
DTC P0605 ECM 1072
Component Description 1072
On Board Diagnosis Logic 1072
DTC Confirmation Procedure 1072
Diagnostic Procedure 1073
DTC P1065 ECM 1075
Component Description 1075
On Board Diagnosis Logic 1075
DTC Confirmation Procedure 1075
Diagnostic Procedure 1076

DTC P1111 IVT CONTROL SOLENOID VALVE ..1077
Component Description 1077
CONSULT-II Reference Value in Data Monitor Mode 1077
On Board Diagnosis Logic 1077
DTC Confirmation Procedure 1077
Wiring Diagram 1078
Diagnostic Procedure 1080
Component Inspection 1081
Removal and Installation 1081
DTC P1121 ELECTRIC THROTTLE CONTROL ACTUATOR 1082
Component Description 1082
On Board Diagnosis Logic 1082
DTC Confirmation Procedure 1082
Diagnostic Procedure 1083
Removal and Installation 1083
DTC P1122 ELECTRIC THROTTLE CONTROL FUNCTION 1084
Description 1084
On Board Diagnosis Logic 1084
DTC Confirmation Procedure 1084
Wiring Diagram 1085
Diagnostic Procedure 1086
Component Inspection 1089
Removal and Installation 1089
DTC P1124, P1126 THROTTLE CONTROL MOTOR RELAY 1090
Component Description 1090
CONSULT-II Reference Value in Data Monitor Mode 1090
On Board Diagnosis Logic 1090
DTC Confirmation Procedure 1090
Wiring Diagram 1092
Diagnostic Procedure 1093
DTC P1128 THROTTLE CONTROL MOTOR 1096
Component Description 1096
On Board Diagnosis Logic 1096
DTC Confirmation Procedure 1096
Wiring Diagram 1097
Diagnostic Procedure 1098
Component Inspection 1100
Removal and Installation 1100
DTC P1143 HO2S1 1101
Component Description 1101
CONSULT-II Reference Value in Data Monitor Mode 1101
On Board Diagnosis Logic 1101
DTC Confirmation Procedure 1102
Overall Function Check 1103
Diagnostic Procedure 1103
Component Inspection 1105
Removal and Installation 1106
DTC P1144 HO2S1 1107
Component Description 1107
CONSULT-II Reference Value in Data Monitor Mode 1107
On Board Diagnosis Logic 1107
DTC Confirmation Procedure 1108
Overall Function Check 1109
Diagnostic Procedure 1109
Component Inspection 1111
Removal and Installation 1112
DTC P1146 HO2S2 1113
Component Description 1113
CONSULT-II Reference Value in Data Monitor Mode 1113
On Board Diagnosis Logic 1113
DTC Confirmation Procedure 1114
Overall Function Check 1115
Wiring Diagram 1116
Diagnostic Procedure 1117
Component Inspection 1119
Removal and Installation 1120
DTC P1147 HO2S2 1121
Component Description 1121
CONSULT-II Reference Value in Data Monitor Mode 1121
On Board Diagnosis Logic 1121
DTC Confirmation Procedure 1122
Overall Function Check 1123
Wiring Diagram 1124
Diagnostic Procedure 1125
Component Inspection 1127
Removal and Installation 1128
DTC P1212 TCS COMMUNICATION LINE 1129
Description 1129
On Board Diagnosis Logic 1129
DTC Confirmation Procedure 1129
Diagnostic Procedure 1129
DTC P1217 ENGINE OVER TEMPERATURE 1130
System Description 1130
CONSULT-II Reference Value in Data Monitor Mode 1131
On Board Diagnosis Logic 1131
Overall Function Check 1132
Wiring Diagram 1135
Diagnostic Procedure 1137
Main 12 Causes of Overheating 1144
Component Inspection 1145
DTC P1225 TP SENSOR 1146
Component Description 1146
On Board Diagnosis Logic 1146
DTC Confirmation Procedure 1146
Diagnostic Procedure 1147
Removal and Installation 1147
DTC P1226 TP SENSOR 1148
Component Description 1148
On Board Diagnosis Logic 1148
DTC Confirmation Procedure 1148
Diagnostic Procedure 1149
Removal and Installation 1149
DTC P1229 SENSOR POWER SUPPLY 1150
On Board Diagnosis Logic 1150
DTC Confirmation Procedure 1150
Wiring Diagram 1151
Diagnostic Procedure 1155

DTC P1706 PNP SWITCH 1158
Component Description 1158
CONSULT-II Reference Value in Data Monitor Mode 1158
On Board Diagnosis Logic 1158
DTC Confirmation Procedure 1158
Overall Function Check 1159
Wiring Diagram 1160
Diagnostic Procedure 1163
DTC P1805 BRAKE SWITCH 1167
Description 1167
CONSULT-II Reference Value in Data Monitor Mode 1167
On Board Diagnosis Logic 1167
FAIL-SAFE MODE 1167
DTC Confirmation Procedure 1167
Wiring Diagram 1168
Diagnostic Procedure 1169
Component Inspection 1171
DTC P2122, P2123 APP SENSOR 1172
Component Description 1172
CONSULT-II Reference Value in Data Monitor Mode 1172
On Board Diagnosis Logic 1172
DTC Confirmation Procedure 1173
Wiring Diagram 1174
Diagnostic Procedure 1177
Component Inspection 1180
Removal and Installation 1180
DTC P2127, P2128 APP SENSOR 1181
Component Description 1181
CONSULT-II Reference Value in Data Monitor Mode 1181
On Board Diagnosis Logic 1181
DTC Confirmation Procedure 1182
Wiring Diagram 1183
Diagnostic Procedure 1187
Component Inspection 1190
Removal and Installation 1190
DTC P2135 TP SENSOR 1191
Component Description 1191
CONSULT-II Reference Value in Data Monitor Mode 1191
On Board Diagnosis Logic 1191
DTC Confirmation Procedure 1192
Wiring Diagram 1193
Diagnostic Procedure 1194
Component Inspection 1196
Removal and Installation 1196
DTC P2138 APP SENSOR 1197
Component Description 1197
CONSULT-II Reference Value in Data Monitor Mode 1197
On Board Diagnosis Logic 1197
DTC Confirmation Procedure 1198
Wiring Diagram 1199
Diagnostic Procedure 1203
Component Inspection 1206
Removal and Installation 1206
ELECTRICAL LOAD SIGNAL 1207
CONSULT-II Reference Value in Data Monitor Mode 1207
Diagnostic Procedure 1207
FUEL INJECTOR 1209
Component Description 1209
CONSULT-II Reference Value in Data Monitor Mode 1209
Wiring Diagram 1210
Diagnostic Procedure 1211
Component Inspection 1214
Removal and Installation 1214
FUEL PUMP 1215
Description 1215
CONSULT-II Reference Value in Data Monitor Mode 1215
Wiring Diagram 1216
Diagnostic Procedure 1217
Component Inspection 1220
Removal and Installation 1220
IGNITION SIGNAL 1221
Component Description 1221
Wiring Diagram 1222
Diagnostic Procedure 1225
Component Inspection 1229
Removal and Installation 1230
REFRIGERANT PRESSURE SENSOR 1231
Component Description 1231
Wiring Diagram 1232
Diagnostic Procedure 1233
Removal and Installation 1235
MI & DATA LINK CONNECTORS 1236
Wiring Diagram 1236
SERVICE DATA AND SPECIFICATIONS (SDS) ..1237
Fuel Pressure 1237
Idle Speed and Ignition Timing 1237
Calculated Load Value 1237
Mass Air Flow Sensor 1237
Intake Air Temperature Sensor 1237
Engine Coolant Temperature Sensor 1237
Knock Sensor 1237
Heated Oxygen Sensor 1 Heater 1237
Heated Oxygen sensor 2 Heater 1237
Crankshaft Position Sensor (POS) 1238
Camshaft Position Sensor (PHASE) 1238
Intake Valve Timing Control Solenoid Valve 1238
Throttle Control Motor 1238
Fuel Injector 1238
Fuel Pump 1238

HR (WITHOUT EURO-OBD)

INDEX FOR DTC 1239
DTC No. Index 1239
Alphabetical Index 1241
PRECAUTIONS 1243
Precautions for Supplemental Restraint System (SRS) “AIR BAG” and “SEAT BELT PRE-TENSIONER” 1243

Maintenance Information 1243
Precautions for Procedures without Cowl Top Cover 1243
On Board Diagnostic (OBD) System of Engine .1243
Precaution 1244
PREPARATION 1248
Special Service Tools 1248
Commercial Service Tools 1249
ENGINE CONTROL SYSTEM 1250
System Diagram 1250
Multiport Fuel Injection (MFI) System 1251
Electronic Ignition (EI) System 1253
Fuel Cut Control (at No Load and High Engine Speed) 1254
AIR CONDITIONING CUT CONTROL 1255
Input/Output Signal Chart 1255
System Description 1255
CAN COMMUNICATION 1256
System Description 1256
EVAPORATIVE EMISSION SYSTEM 1257
Description 1257
Component Inspection 1260
NATS (NISSAN ANTI-THEFT SYSTEM) 1261
Description 1261
POSITIVE CRANKCASE VENTILATION 1262
Description 1262
Component Inspection 1262
ON BOARD DIAGNOSTIC (OBD) SYSTEM 1264
Introduction 1264
Two Trip Detection Logic 1264
Emission-related Diagnostic Information 1264
Malfunction Indicator (MI) 1268
BASIC SERVICE PROCEDURE 1272
Basic Inspection 1272
Idle Speed and Ignition Timing Check 1277
Accelerator Pedal Released Position Learning .1278
Throttle Valve Closed Position Learning 1279
Idle Air Volume Learning 1279
Fuel Pressure Check 1281
TROUBLE DIAGNOSIS 1284
Trouble Diagnosis Introduction 1284
DTC Inspection Priority Chart 1290
Fail-Safe Chart 1291
Symptom Matrix Chart 1292
Engine Control Component Parts Location 1296
Vacuum Hose Drawing 1301
Circuit Diagram 1302
ECM Harness Connector Terminal Layout 1304
ECM Terminals and Reference Value 1304
CONSULT-II Function (ENGINE) 1312
CONSULT-II Reference Value in Data Monitor ...1321
Major Sensor Reference Graph in Data Monitor Mode 1324
TROUBLE DIAGNOSIS - SPECIFICATION VALUE 1326
Description 1326
Testing Condition 1326
Inspection Procedure 1326
Diagnostic Procedure 1327
TROUBLE DIAGNOSIS FOR INTERMITTENT INCI-DENT 1336
Description 1336
Diagnostic Procedure 1336
POWER SUPPLY AND GROUND CIRCUIT 1337
Wiring Diagram 1337
Diagnostic Procedure 1338
Ground Inspection 1342
DTC U1000, U1001 CAN COMMUNICATION LINE 1344
Description 1344
On Board Diagnosis Logic 1344
DTC Confirmation Procedure 1344
Wiring Diagram 1345
Diagnostic Procedure 1346
DTC U1010 CAN COMMUNICATION 1347
Description 1347
On Board Diagnosis Logic 1347
DTC Confirmation Procedure 1347
Diagnostic Procedure 1348
DTC P0011 IVT CONTROL 1349
Description 1349
CONSULT-II Reference Value in Data Monitor Mode 1349
On Board Diagnosis Logic 1350
DTC Confirmation Procedure 1350
Overall Function Check 1351
Diagnostic Procedure 1352
Component Inspection 1353
Removal and Installation 1353
DTC P0102, P0103 MAF SENSOR 1354
Component Description 1354
CONSULT-II Reference Value in Data Monitor Mode 1354
On Board Diagnosis Logic 1354
DTC Confirmation Procedure 1355
Wiring Diagram 1356
Diagnostic Procedure 1357
Component Inspection 1359
Removal and Installation 1360
DTC P0117, P0118 ECT SENSOR 1361
Component Description 1361
On Board Diagnosis Logic 1361
DTC Confirmation Procedure 1362
Wiring Diagram 1363
Diagnostic Procedure 1364
Component Inspection 1365
Removal and Installation 1366
DTC P0122, P0123 TP SENSOR 1367
Component Description 1367
CONSULT-II Reference Value in Data Monitor Mode 1367
On Board Diagnosis Logic 1367
DTC Confirmation Procedure 1368
Wiring Diagram 1369
Diagnostic Procedure 1370
Component Inspection 1372
Removal and Installation 1372
DTC P0132 HO2S1 1373
Component Description 1373
CONSULT-II Reference Value in Data Monitor Mode

1373
On Board Diagnosis Logic 1373
DTC Confirmation Procedure 1374
Wiring Diagram 1375
Diagnostic Procedure 1376
Component Inspection 1379
Removal and Installation 1380
DTC P0134 HO2S1 1381
Component Description 1381
CONSULT-II Reference Value in Data Monitor Mode 1381
On Board Diagnosis Logic 1381
Overall Function Check 1382
Wiring Diagram 1383
Diagnostic Procedure 1384
Component Inspection 1385
Removal and Installation 1387
DTC P0138 HO2S2 1388
Component Description 1388
CONSULT-II Reference Value in Data Monitor Mode 1388
On Board Diagnosis Logic 1388
DTC Confirmation Procedure 1389
Wiring Diagram 1390
Diagnostic Procedure 1391
Component Inspection 1392
Removal and Installation 1394
DTC P0222, P0223 TP SENSOR 1395
Component Description 1395
CONSULT-II Reference Value in Data Monitor Mode 1395
On Board Diagnosis Logic 1395
DTC Confirmation Procedure 1396
Wiring Diagram 1397
Diagnostic Procedure 1398
Component Inspection 1400
Removal and Installation 1400
DTC P0327, P0328 KS 1401
Component Description 1401
On Board Diagnosis Logic 1401
DTC Confirmation Procedure 1401
Wiring Diagram 1402
Diagnostic Procedure 1403
Component Inspection 1404
Removal and Installation 1404
DTC P0335 CKP SENSOR (POS) 1405
Component Description 1405
CONSULT-II Reference Value in Data Monitor Mode 1405
On Board Diagnosis Logic 1405
DTC Confirmation Procedure 1406
Wiring Diagram 1407
Diagnostic Procedure 1409
Component Inspection 1412
Removal and Installation 1412
DTC P0340 CMP SENSOR (PHASE) 1413
Component Description 1413
On Board Diagnosis Logic 1413
DTC Confirmation Procedure 1414
Wiring Diagram 1415
Diagnostic Procedure 1416
Component Inspection 1418
Removal and Installation 1419
DTC P0605 ECM 1420
Component Description 1420
On Board Diagnosis Logic 1420
DTC Confirmation Procedure 1420
Diagnostic Procedure 1422
DTC P1065 ECM 1423
Component Description 1423
On Board Diagnosis Logic 1423
DTC Confirmation Procedure 1423
Diagnostic Procedure 1424
DTC P1111 IVT CONTROL SOLENOID VALVE ...1425
Component Description 1425
CONSULT-II Reference Value in Data Monitor Mode 1425
On Board Diagnosis Logic 1425
DTC Confirmation Procedure 1425
Wiring Diagram 1426
Diagnostic Procedure 1428
Component Inspection 1429
Removal and Installation 1429
DTC P1121 ELECTRIC THROTTLE CONTROL ACTUATOR 1430
Component Description 1430
On Board Diagnosis Logic 1430
DTC Confirmation Procedure 1430
Diagnostic Procedure 1431
Removal and Installation 1432
DTC P1122 ELECTRIC THROTTLE CONTROL FUNCTION 1433
Description 1433
On Board Diagnosis Logic 1433
DTC Confirmation Procedure 1433
Wiring Diagram 1434
Diagnostic Procedure 1435
Component Inspection 1438
Removal and Installation 1438
DTC P1124, P1126 THROTTLE CONTROL MOTOR RELAY 1439
Component Description 1439
CONSULT-II Reference Value in Data Monitor Mode 1439
On Board Diagnosis Logic 1439
DTC Confirmation Procedure 1439
Wiring Diagram 1441
Diagnostic Procedure 1442
DTC P1128 THROTTLE CONTROL MOTOR 1445
Component Description 1445
On Board Diagnosis Logic 1445
DTC Confirmation Procedure 1445
Wiring Diagram 1446
Diagnostic Procedure 1447
Component Inspection 1449
Removal and Installation 1449
DTC P1212 TCS COMMUNICATION LINE 1450
Description 1450

On Board Diagnosis Logic 1450
DTC Confirmation Procedure 1450
Diagnostic Procedure 1450
DTC P1217 ENGINE OVER TEMPERATURE 1451
System Description 1451
CONSULT-II Reference Value in Data Monitor Mode 1452
On Board Diagnosis Logic 1452
Overall Function Check 1453
Wiring Diagram 1456
Diagnostic Procedure 1458
Main 12 Causes of Overheating 1465
Component Inspection 1466
DTC P1225 TP SENSOR 1467
Component Description 1467
On Board Diagnosis Logic 1467
DTC Confirmation Procedure 1467
Diagnostic Procedure 1468
Removal and Installation 1468
DTC P1226 TP SENSOR 1469
Component Description 1469
On Board Diagnosis Logic 1469
DTC Confirmation Procedure 1469
Diagnostic Procedure 1470
Removal and Installation 1470
DTC P1229 SENSOR POWER SUPPLY 1471
On Board Diagnosis Logic 1471
DTC Confirmation Procedure 1471
Wiring Diagram 1472
Diagnostic Procedure 1476
DTC P1706 PNP SWITCH 1479
Component Description 1479
CONSULT-II Reference Value in Data Monitor Mode 1479
On Board Diagnosis Logic 1479
Overall Function Check 1479
Wiring Diagram 1480
Diagnostic Procedure 1483
DTC P1805 BRAKE SWITCH 1487
Description 1487
CONSULT-II Reference Value in Data Monitor Mode 1487
On Board Diagnosis Logic 1487
FAIL-SAFE MODE 1487
DTC Confirmation Procedure 1487
Wiring Diagram 1488
Diagnostic Procedure 1489
Component Inspection 1491
DTC P2122, P2123 APP SENSOR 1492
Component Description 1492
CONSULT-II Reference Value in Data Monitor Mode 1492
On Board Diagnosis Logic 1492
DTC Confirmation Procedure 1493
Wiring Diagram 1494
Diagnostic Procedure 1497
Component Inspection 1499
Removal and Installation 1500
DTC P2127, P2128 APP SENSOR 1501
Component Description 1501
CONSULT-II Reference Value in Data Monitor Mode 1501
On Board Diagnosis Logic 1501
DTC Confirmation Procedure 1502
Wiring Diagram 1503
Diagnostic Procedure 1507
Component Inspection 1509
Removal and Installation 1510
DTC P2135 TP SENSOR 1511
Component Description 1511
CONSULT-II Reference Value in Data Monitor Mode 1511
On Board Diagnosis Logic 1511
DTC Confirmation Procedure 1512
Wiring Diagram 1513
Diagnostic Procedure 1514
Component Inspection 1516
Removal and Installation 1516
DTC P2138 APP SENSOR 1517
Component Description 1517
CONSULT-II Reference Value in Data Monitor Mode 1517
On Board Diagnosis Logic 1517
DTC Confirmation Procedure 1518
Wiring Diagram 1519
Diagnostic Procedure 1523
Component Inspection 1527
Removal and Installation 1527
ELECTRICAL LOAD SIGNAL 1528
CONSULT-II Reference Value in Data Monitor Mode 1528
Diagnostic Procedure 1528
EVAP CANISTER PURGE VOLUME CONTROL SOLENOID VALVE 1530
Description 1530
CONSULT-II Reference Value in Data Monitor Mode 1530
Wiring Diagram 1531
Diagnostic Procedure 1533
Component Inspection 1536
Removal and Installation 1536
FUEL INJECTOR 1537
Component Description 1537
CONSULT-II Reference Value in Data Monitor Mode 1537
Wiring Diagram 1538
Diagnostic Procedure 1539
Component Inspection 1542
Removal and Installation 1542
FUEL PUMP 1543
Description 1543
CONSULT-II Reference Value in Data Monitor Mode 1543
Wiring Diagram 1544
Diagnostic Procedure 1545
Component Inspection 1548
Removal and Installation 1548

HO2S1 1549
Component Description 1549
CONSULT-II Reference Value in Data Monitor Mode 1549
Wiring Diagram 1550
Diagnostic Procedure 1552
Component Inspection 1555
Removal and Installation 1556
HO2S1 HEATER 1557
Description 1557
CONSULT-II Reference Value in Data Monitor Mode 1557
Wiring Diagram 1558
Diagnostic Procedure 1560
Component Inspection 1562
Removal and Installation 1562
HO2S2 1563
Component Description 1563
CONSULT-II Reference Value in Data Monitor Mode 1563
Wiring Diagram 1564
Diagnostic Procedure 1565
Component Inspection 1567
Removal and Installation 1568
HO2S2 HEATER 1569
Description 1569
CONSULT-II Reference Value in Data Monitor Mode 1569
Wiring Diagram 1570
Diagnostic Procedure 1572
Component Inspection 1574
Removal and Installation 1574
IAT SENSOR 1575
Component Description 1575
Wiring Diagram 1576
Diagnostic Procedure 1577
Component Inspection 1579
Removal and Installation 1579
IGNITION SIGNAL 1580
Component Description 1580
Wiring Diagram 1581
Diagnostic Procedure 1584
Component Inspection 1588
Removal and Installation 1589
REFRIGERANT PRESSURE SENSOR 1590
Component Description 1590
Wiring Diagram 1591
Diagnostic Procedure 1592
Removal and Installation 1594
VSS 1595
Description 1595
Diagnostic Procedure 1595
MI & DATA LINK CONNECTORS 1596
Wiring Diagram 1596
SERVICE DATA AND SPECIFICATIONS (SDS) ..1597
Fuel Pressure 1597
Idle Speed and Ignition Timing 1597
Mass Air Flow Sensor 1597
Intake Air Temperature Sensor 1597
Engine Coolant Temperature Sensor 1597
Knock Sensor 1597
Heated Oxygen Sensor 1 Heater 1597
Heated Oxygen sensor 2 Heater 1597
Crankshaft Position Sensor (POS) 1597
Camshaft Position Sensor (PHASE) 1597
Intake Valve Timing Control Solenoid Valve 1597
Throttle Control Motor 1598
Fuel Injector 1598
Fuel Pump 1598

K9K

INDEX FOR DTC 1599
DTC No. Index 1599
Alphabetical Index 1601
PRECAUTIONS 1603
Precautions for Supplemental Restraint System (SRS) “AIR BAG” and “SEAT BELT PRE-TENSIONER” 1603
Maintenance Information 1603
Precautions for Procedures without Cowl Top Cover 1603
On Board Diagnostic (OBD) System of Engine ..1603
Precautions 1604
Cleanliness 1606
ENGINE CONTROL SYSTEM 1609
System Diagram 1609
Vacuum Hose Drawing 1611
System Overview 1612
Fuel Injection Control 1612
Functions Performed 1613
Idle Speed Control 1616
Air Conditioning Control 1618
Pre/Postheating (Glow Plug) Control 1619
Glow Plugs 1620
Cooling Fan Control 1620
Oil Vapour Rebreathing 1622
Exhaust Gas Recirculation (EGR) 1622
CAN Communication 1624
BASIC SERVICE PROCEDURE 1625
Fuel Filter 1625
Injector Adjustment Value Registration 1625
Tightening The High Pressure Pipes 1626
Checking Sealing After Repair 1626
Replacing ECM 1626
Replacing Fuel Injectors 1627
ON BOARD DIAGNOSTIC (OBD) SYSTEM 1628
Introduction 1628
How to Erase DTC 1628
NATS (Nissan Anti-Theft System) 1629
TROUBLE DIAGNOSIS 1630
Trouble Diagnosis Introduction 1630
Trouble Diagnosis - Symptom 1634
Trouble Diagnosis - Basic Test Procedure 1660
Engine Control Component Parts Location 1668
Wiring Diagram — ECM — 1671
ECM Harness Connector Terminal Layout 1673
ECM Terminals And Reference Value 1673

Conformity Check 1680
CONSULT-II Reference Value in Data Monitor Mode 1694
TROUBLE DIAGNOSIS FOR INTERMITTENT INCIDENT 1697
Description 1697
Diagnostic Procedure 1697
POWER SUPPLY AND GROUND CIRCUIT 1698
Wiring Diagram 1698
Diagnostic Procedure 1699
Ground Inspection 1703
DTC PC001 CAN COMMUNICATION LINE 1705
Description 1705
On Board Diagnosis Logic 1705
Wiring Diagram 1706
Diagnostic Procedure 1707
DTC P0016 CKP - CMP CORRELATION 1708
On Board Diagnosis Logic 1708
Diagnostic Procedure 1708
DTC P0045 TC BOOST CONTROL SORENOID VALVE 1710
Description 1710
On Board Diagnosis Logic 1710
Wiring Diagram 1711
Diagnostic Procedure 1713
Component Inspection 1714
DTC P0070 IAT SENSOR 1715
Component Description 1715
On Board Diagnosis Logic 1715
Wiring Diagram 1716
Diagnostic Procedure 1717
Component Inspection 1718
Removal and Installation 1718
DTC P0087 FUEL SYSTEM 1719
On Board Diagnosis Logic 1719
Diagnostic Procedure 1719
Removal and Installation 1720
DTC P0089 FUEL PUMP 1721
On Board Diagnosis Logic 1721
Diagnostic Procedure 1721
Removal and Installation 1721
DTC P0100 MAF SENSOR 1722
Component Description 1722
CONSULT-II Reference Value in Data Monitor Mode 1722
On Board Diagnosis Logic 1722
Wiring Diagram 1723
Diagnostic Procedure 1724
Component Inspection 1726
Removal and Installation 1726
DTC P0115 ECT SENSOR 1727
Description 1727
On Board Diagnosis Logic 1727
Wiring Diagram 1728
Diagnostic Procedure 1729
Component Inspection 1730
Removal and Installation 1730
DTC P0170 FUEL INJECTOR ADJUSTMENT VALUE 1731
On Board Diagnosis Logic 1731
Diagnostic Procedure 1731
DTC P0180 FUEL PUMP TEMPERATURE SENSOR 1732
Description 1732
CONSULT-II Reference Value in Data Monitor Mode 1732
On Board Diagnosis Logic 1732
Wiring Diagram 1733
Diagnostic Procedure 1734
Component Inspection 1735
Removal and Installation 1735
DTC P0190 FRP SENSOR 1736
CONSULT-II Reference Value in Data Monitor Mode 1736
On Board Diagnosis Logic 1736
Wiring Diagram 1737
Diagnostic Procedure 1738
Component Inspection 1739
Removal and Installation 1739
DTC P0200 FUEL INJECTOR 1740
Component Description 1740
CONSULT-II Reference Value in Data Monitor Mode 1740
On Board Diagnosis Logic 1740
Wiring Diagram 1741
Diagnostic Procedure 1743
Removal and Installation 1744
DTC P0201 - P0204 FUEL INJECTOR 1745
Component Description 1745
CONSULT-II Reference Value in Data Monitor Mode 1745
On Board Diagnosis Logic 1745
Wiring Diagram 1746
Diagnostic Procedure 1747
Component Inspection 1750
Removal and Installation 1750
DTC P0225 APP SENSOR 1751
Description 1751
CONSULT-II Reference Value in Data Monitor Mode 1751
On Board Diagnosis Logic 1751
Wiring Diagram 1752
Diagnostic Procedure 1755
Component Inspection 1757
Removal and Installation 1758
DTC P0231 FUEL PUMP 1759
Description 1759
CONSULT-II Reference Value in Data Monitor Mode 1759
On Board Diagnosis Logic 1759
Wiring Diagram 1760
Diagnostic Procedure 1761
Component Inspection 1762
Removal and Installation 1762
DTC P0235 TC BOOST SENSOR 1763
Component Description 1763
CONSULT-II Reference Value in Data Monitor Mode

1763
On Board Diagnosis Logic 1763
Wiring Diagram 1764
Diagnostic Procedure 1765
Removal and Installation 1767
DTC P0263, P0266, P0269, P0272 NO.1 - 4 CYLINDER MISFIRE 1768
On Board Diagnosis Logic 1768
Diagnostic Procedure 1769
DTC P0325 KNOCK SENSOR (KS) 1770
Component Description 1770
On Board Diagnosis Logic 1770
Wiring Diagram 1771
Diagnostic Procedure 1772
Removal and Installation 1773
DTC P0335 CKP SENSOR 1774
Description 1774
CONSULT-II Reference Value in Data Monitor Mode 1774
On Board Diagnosis Logic 1774
Wiring Diagram 1775
Diagnostic Procedure 1776
Component Inspection 1777
Removal and Installation 1777
DTC P0340 CMP SENSOR 1778
Description 1778
On Board Diagnosis Logic 1778
Wiring Diagram 1779
Diagnostic Procedure 1780
Component Inspection 1783
Removal and Installation 1783
DTC P0380 GLOW CONTROL UNIT 1784
On Board Diagnosis Logic 1784
Wiring Diagram 1785
Diagnostic Procedure 1786
DTC P0382 GLOW CONTROL UNIT 1788
On Board Diagnosis Logic 1788
Wiring Diagram 1789
Diagnostic Procedure 1790
DTC P0400 EGR FUNCTION 1791
CONSULT-II Reference Value in Data Monitor Mode 1791
On Board Diagnosis Logic 1791
Wiring Diagram 1792
Diagnostic Procedure 1794
DTC P0403 EGR VOLUME CONTROL VALVE ...1795
CONSULT-II Reference Value in Data Monitor Mode 1795
On Board Diagnosis Logic 1795
Wiring Diagram 1796
Diagnostic Procedure 1798
Component Inspection 1799
Removal and Installation 1799
DTC P0409 EGR VOLUME CONTROL VALVE CONTROL POSITION SENSOR 1800
CONSULT-II Reference Value in Data Monitor Mode 1800
On Board Diagnosis Logic 1800
Wiring Diagram 1801
Diagnostic Procedure 1803
Component Inspection 1804
Removal and Installation 1804
DTC P0487 EGR VOLUME CONTROL VALVE CONTROL POSITION SENSOR 1805
CONSULT-II Reference Value in Data Monitor Mode 1805
On Board Diagnosis Logic 1805
Wiring Diagram 1806
Diagnostic Procedure 1808
Component Inspection 1809
Removal and Installation 1809
DTC P0500 VSS 1810
Description 1810
On Board Diagnosis Logic 1810
Diagnostic Procedure 1810
DTC P0530 REFRIGERANT PRESSURE SENSOR 1811
Component Description 1811
CONSULT-II Reference Value in Data Monitor Mode 1811
On Board Diagnosis Logic 1811
Wiring Diagram 1812
Diagnostic Procedure 1813
Removal and Installation 1815
DTC P0560 BATTERY VOLTAGE 1816
On Board Diagnosis Logic 1816
Wiring Diagram 1817
Diagnostic Procedure 1818
DTC P0571 BRAKE SWITCH 1820
Description 1820
On Board Diagnosis Logic 1820
Wiring Diagram 1821
Diagnostic Procedure 1822
Component Inspection 1824
DTC P0604 ECM 1825
Description 1825
On Board Diagnosis Logic 1825
Diagnostic Procedure 1825
DTC P0606 ECM 1826
Description 1826
On Board Diagnosis Logic 1826
Diagnostic Procedure 1826
DTC P062F ECM 1828
Description 1828
On Board Diagnosis Logic 1828
Diagnostic Procedure 1828
DTC P0641 SENSOR POWER SUPPLY 1830
On Board Diagnosis Logic 1830
Wiring Diagram 1831
Diagnostic Procedure 1835
DTC P0651 APP SENSOR 1837
Description 1837
CONSULT-II Reference Value in Data Monitor Mode 1837
On Board Diagnosis Logic 1837
Wiring Diagram 1838
Diagnostic Procedure 1841
Component Inspection 1843
Removal and Installation 1844

DTC P0685 ECM RELAY 1845
On Board Diagnosis Logic 1845
Wiring Diagram 1846
Diagnostic Procedure 1847
DTC P0703 BRAKE SWITCH 1850
Description 1850
On Board Diagnosis Logic 1850
Wiring Diagram 1851
Diagnostic Procedure 1852
Component Inspection 1854
DTC P2120 APP SENSOR 1855
Description 1855
CONSULT-II Reference Value in Data Monitor Mode 1855
On Board Diagnosis Logic 1855
Wiring Diagram 1856
Diagnostic Procedure 1859
Component Inspection 1861
Removal and Installation 1862
DTC P2226 BARO SENSOR 1863
Description 1863
On Board Diagnosis Logic 1863
Diagnostic Procedure 1863
COOLING FAN 1864
System Description 1864
Wiring Diagram 1866
Diagnostic Procedure 1867
Component Inspection 1868
MI & DATA LINK CONNECTORS 1869
Wiring Diagram 1869
SERVICE DATA AND SPECIFICATIONS (SDS) .1870
.....1870

APPLICATION NOTICE

PFP:00000

How to Check Vehicle Type

BBS002T8

CR ENGINE AND HR ENGINE

Check the Euro-OBD (E-OBD) discrimination of the vehicle (refer to GI-45, "IDENTIFICATION INFORMATION") to confirm the service information in EC section.

K9K ENGINE

Confirm K9K engine type with “Model” written on the “IDENTIFICATION PLATE” (Refe to GI-45, "IDENTIFICATION INFORMATION"), then refer to service information in EC section.

Vehicle type	Engine type
xTKxxxxE11xxE	50kw
xTKxxxxE11xxA	63kw

INDEX FOR DTC

PFP:00024

DTC No. Index

BBS002TA

NOTE:

- **If DTC U1001 is displayed with other DTC, first perform the trouble diagnosis for DTC U1001. Refer to EC-134, "DTC U1001 CAN COMMUNICATION LINE" .**
- **If DTC U1010 is displayed with other DTC, first perform the trouble diagnosis for DTC U1010. Refer to EC-137, "DTC U1010 CAN COMMUNICATION" .**

DTC*1		Items (CONSULT-II screen terms)	Reference page
CONSULT-II GST*2	ECM*3		
No DTC	Flashing*4	NO DTC IS DETECTED. FURTHER TESTING MAY BE REQUIRED.	EC-59
U1001	1001*5	CAN COMM CIRCUIT	EC-134
U1010	1010	CONTROL UNIT(CAN)	EC-137
P0000	**0000**	**NO DTC IS DETECTED. FURTHER TESTING MAY BE REQUIRED.**	—
P0011	0011	INT/V TIM CONT-B1	EC-139
P0031	0031	HO2S1 HTR (B1)	EC-143
P0032	0032	HO2S1 HTR (B1)	EC-143
P0037	0037	HO2S2 HTR (B1)	EC-149
P0038	0038	HO2S2 HTR (B1)	EC-149
P0107	0107	ABSL PRES SEN/CIRC	EC-155
P0108	0108	ABSL PRES SEN/CIRC	EC-155
P0112	0112	IAT SEN/CIRCUIT	EC-161
P0113	0113	IAT SEN/CIRCUIT	EC-161
P0117	0117	ECT SEN/CIRC	EC-166
P0118	0118	ECT SEN/CIRC	EC-166
P0122	0122	TP SEN 2/CIRC	EC-171
P0123	0123	TP SEN 2/CIRC	EC-171
P0132	0132	HO2S1 (B1)	EC-178
P0133	0133	HO2S1 (B1)	EC-185
P0134	0134	HO2S1 (B1)	EC-195
P0138	0138	HO2S2 (B1)	EC-203
P0139	0139	HO2S2 (B1)	EC-210
P0171	0171	FUEL SYS-LEAN-B1	EC-218
P0172	0172	FUEL SYS-RICH-B1	EC-226
P0222	0222	TP SEN 1/CIRC	EC-233
P0223	0223	TP SEN 1/CIRC	EC-233
P0300	0300	MULTI CYL MISFIRE	EC-240
P0301	0301	CYL 1 MISFIRE	EC-240
P0302	0302	CYL 2 MISFIRE	EC-240
P0303	0303	CYL 3 MISFIRE	EC-240
P0304	0304	CYL 4 MISFIRE	EC-240
P0327	0327	KNOCK SEN/CIRC-B1	EC-246
P0328	0328	KNOCK SEN/CIRC-B1	EC-246

DTC*1		Items (CONSULT-II screen terms)	Reference page
CONSULT-II GST*2	ECM*3		
P0335	0335	CKP SEN/CIRCUIT	EC-250
P0340	0340	CMP SEN/CIRC-B1	EC-257
P0420	0420	TW CATALYST SYS-B1	EC-264
P0444	0444	PURG VOLUME CONT/V	EC-270
P0500	0500	VEH SPEED SEN/CIRC	EC-277
P0605	0605	ECM	EC-279
P1065	1065	ECM BACK UP/CIRCUIT	EC-282
P1111	1111	INT/V TIM V/CIR-B1	EC-286
P1121	1121	ETC ACTR	EC-291
P1122	1122	ETC FUNCTION/CIRC	EC-293
P1124	1124	ETC MOT PWR	EC-299
P1126	1126	ETC MOT PWR	EC-299
P1128	1128	ETC MOT	EC-305
P1143	1143	HO2S1 (B1)	EC-310
P1144	1144	HO2S1 (B1)	EC-316
P1146	1146	HO2S2 (B1)	EC-322
P1147	1147	HO2S2 (B1)	EC-330
P1171	1171	INTAKE ERROR	EC-338
P1211	1211	TCS C/U FUNCTN	EC-343
P1212	1212	TCS/CIRC	EC-344
P1217	1217	ENG OVER TEMP	EC-345
P1225	1225	CTP LEARNING	EC-359
P1226	1226	CTP LEARNING	EC-361
P1229	1229	SENSOR POWER/CIRC	EC-363
P1610 - P1615	1610 - 1615	NATS MALFUNCTION	EC-44
P1706	1706	P-N POS SW/CIRCUIT	EC-371
P1805	1805	BRAKE SW/CIRCUIT	EC-377
P2122	2122	APP SEN 1/CIRC	EC-383
P2123	2123	APP SEN 1/CIRC	EC-383
P2127	2127	APP SEN 2/CIRC	EC-392
P2128	2128	APP SEN 2/CIRC	EC-392
P2135	2135	TP SENSOR	EC-402
P2138	2138	APP SENSOR	EC-409

*1: 1st trip DTC No. is the same as DTC No.
*2: This number is prescribed by ISO 15031-5.
*3: In Diagnostic Test Mode II (Self-diagnostic results), this number is controlled by NISSAN.
*4: When engine is running.
*5: The troubleshooting for this DTC needs CONSULT-II.

Alphabetical Index

BBS002T9

NOTE:

- **If DTC U1001 is displayed with other DTC, first perform the trouble diagnosis for DTC U1001. Refer to EC-134, "DTC U1001 CAN COMMUNICATION LINE" .**
- **If DTC U1010 is displayed with other DTC, first perform the trouble diagnosis for DTC U1010. Refer to EC-137, "DTC U1010 CAN COMMUNICATION" .**

Items (CONSULT-II screen terms)	DTC*1		Reference page
	CONSULT-II GST*2	ECM*3	
ABSL PRES SEN/CIRC	P0107	0107	EC-155
ABSL PRES SEN/CIRC	P0108	0108	EC-155
APP SEN 1/CIRC	P2122	2122	EC-383
APP SEN 1/CIRC	P2123	2123	EC-383
APP SEN 2/CIRC	P2127	2127	EC-392
APP SEN 2/CIRC	P2128	2128	EC-392
APP SENSOR	P2138	2138	EC-409
BRAKE SW/CIRCUIT	P1805	1805	EC-377
CAN COMM CIRCUIT	U1001	1001*5	EC-134
CKP SEN/CIRCUIT	P0335	0335	EC-250
CMP SEN/CIRC-B1	P0340	0340	EC-257
CONTROL UNIT(CAN)	U1010	1010	EC-137
CTP LEARNING	P1225	1225	EC-359
CTP LEARNING	P1226	1226	EC-361
CYL 1 MISFIRE	P0301	0301	EC-240
CYL 2 MISFIRE	P0302	0302	EC-240
CYL 3 MISFIRE	P0303	0303	EC-240
CYL 4 MISFIRE	P0304	0304	EC-240
ECM	P0605	0605	EC-279
ECM BACK UP/CIRCUIT	P1065	1065	EC-282
ECT SEN/CIRC	P0117	0117	EC-166
ECT SEN/CIRC	P0118	0118	EC-166
ENG OVER TEMP	P1217	1217	EC-345
ETC ACTR	P1121	1121	EC-291
ETC FUNCTION/CIRC	P1122	1122	EC-293
ETC MOT	P1128	1128	EC-305
ETC MOT PWR	P1124	1124	EC-299
ETC MOT PWR	P1126	1126	EC-299
FUEL SYS-LEAN-B1	P0171	0171	EC-218
FUEL SYS-RICH-B1	P0172	0172	EC-226
HO2S1 (B1)	P0132	0132	EC-178
HO2S1 (B1)	P0133	0133	EC-185
HO2S1 (B1)	P0134	0134	EC-195
HO2S1 (B1)	P1143	1143	EC-310
HO2S1 (B1)	P1144	1144	EC-316
HO2S1 HTR (B1)	P0031	0031	EC-143
HO2S1 HTR (B1)	P0032	0032	EC-143

Items (CONSULT-II screen terms)	DTC*1		Reference page
	CONSULT-II GST*2	ECM*3	
HO2S2 (B1)	P0138	0138	EC-203
HO2S2 (B1)	P0139	0139	EC-210
HO2S2 (B1)	P1146	1146	EC-322
HO2S2 (B1)	P1147	1147	EC-330
HO2S2 HTR (B1)	P0037	0037	EC-149
HO2S2 HTR (B1)	P0038	0038	EC-149
IAT SEN/CIRCUIT	P0112	0112	EC-161
IAT SEN/CIRCUIT	P0113	0113	EC-161
INTAKE ERROR	P1171	1171	EC-338
INT/V TIM CONT-B1	P0011	0011	EC-139
INT/V TIM V/CIR-B1	P1111	1111	EC-286
KNOCK SEN/CIRC-B1	P0327	0327	EC-246
KNOCK SEN/CIRC-B1	P0328	0328	EC-246
MULTI CYL MISFIRE	P0300	0300	EC-240
NATS MALFUNCTION	P1610 - P1615	1610 - 1615	EC-44
NO DTC IS DETECTED. FURTHER TESTING MAY BE REQUIRED.	No DTC	Flashing*4	EC-59
NO DTC IS DETECTED. FURTHER TESTING MAY BE REQUIRED.	**P0000**	**0000**	**—**
P-N POS SW/CIRCUIT	P1706	1706	EC-371
PURG VOLUME CONT/V	P0444	0444	EC-270
SENSOR POWER/CIRC	P1229	1229	EC-363
TCS C/U FUNCTN	P1211	1211	EC-343
TCS/CIRC	P1212	1212	EC-344
TP SEN 1/CIRC	P0222	0222	EC-233
TP SEN 1/CIRC	P0223	0223	EC-233
TP SEN 2/CIRC	P0122	0122	EC-171
TP SEN 2/CIRC	P0123	0123	EC-171
TP SENSOR	P2135	2135	EC-402
TW CATALYST SYS-B1	P0420	0420	EC-264
VEH SPEED SEN/CIRC	P0500	0500	EC-277

*1: 1st trip DTC No. is the same as DTC No.
*2: This number is prescribed by ISO 15031-5.
*3: In Diagnostic Test Mode II (Self-diagnostic results), this number is controlled by NISSAN.
*4: When engine is running.
*5: The troubleshooting for this DTC needs CONSULT-II.

PRECAUTIONS

PFP:00001

Precautions for Supplemental Restraint System (SRS) “AIR BAG” and “SEAT BELT PRE-TENSIONER”

BBS003ZU

The Supplemental Restraint System such as “AIR BAG” and “SEAT BELT PRE-TENSIONER”, used along with a front seat belt, helps to reduce the risk or severity of injury to the driver and front passenger for certain types of collision. Information necessary to service the system safely is included in the SRS and SB section of this Service Manual.

WARNING:

- **To avoid rendering the SRS inoperative, which could increase the risk of personal injury or death in the event of a collision which would result in air bag inflation, all maintenance must be performed by an authorized NISSAN/INFINITI dealer.**
- **Improper maintenance, including incorrect removal and installation of the SRS, can lead to personal injury caused by unintentional activation of the system. For removal of Spiral Cable and Air Bag Module, see the SRS section.**
- **Do not use electrical test equipment on any circuit related to the SRS unless instructed to in this Service Manual. SRS wiring harnesses can be identified by yellow and/or orange harnesses or harness connectors.**

Maintenance Information

BBS005AP

If any of following part is replaced, always replace with new* one.
If it's not (or fail to do so), the electrical system may not be operated properly.
*: New one means a virgin control unit that has never been energized on-board.

RHD MODELS

- BCM (Models without Intelligent Key system)
- Intelligent Key unit (Models with Intelligent Key system)
- ECM
- IPDM E/R
- Combination meter
- EPS control unit

LHD MODELS

- BCM (Models without Intelligent Key system)
- Intelligent Key unit (Models with Intelligent Key system)
- ECM

Precautions for Procedures without Cowl Top Cover

BBS003ZV

When performing the procedure after removing cowl top cover, cover the lower end of windshield with urethane, etc.

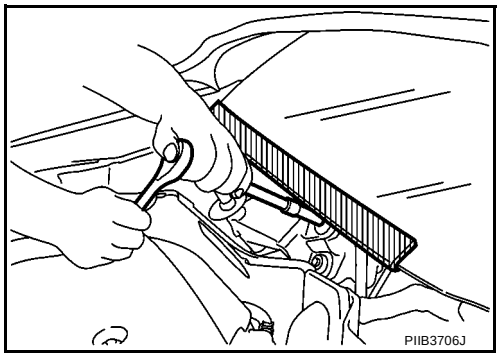

On Board Diagnostic (OBD) System of Engine

BBS002TD

The ECM has an on board diagnostic system. It will light up the malfunction indicator (MI) to warn the driver of a malfunction causing emission deterioration.

CAUTION:

- **Be sure to turn the ignition switch OFF and disconnect the battery ground cable before any repair or inspection work. The open/short circuit of related switches, sensors, solenoid valves, etc. will cause the MI to light up.**

- Be sure to connect and lock the connectors securely after work. A loose (unlocked) connector will cause the MI to light up due to the open circuit. (Be sure the connector is free from water, grease, dirt, bent terminals, etc.)
- Certain systems and components, especially those related to OBD, may use a new style slide-locking type harness connector. For description and how to disconnect, refer to PG-88, "HARNESS CONNECTOR" .
- Be sure to route and secure the harnesses properly after work. The interference of the harness with a bracket, etc. may cause the MI to light up due to the short circuit.
- Be sure to connect rubber tubes properly after work. A misconnected or disconnected rubber tube may cause the MI to light up due to the malfunction of the fuel injection system, etc.
- Be sure to erase the unnecessary malfunction information (repairs completed) from the ECM before returning the vehicle to the customer.

Precaution

BBS002TE

- Always use a 12 volt battery as power source.
- Do not attempt to disconnect battery cables while engine is running.
- Before connecting or disconnecting the ECM harness connector, turn ignition switch OFF and disconnect negative battery cable. Failure to do so may damage the ECM because battery voltage is applied to ECM even if ignition switch is turned off.
- Before removing parts, turn ignition switch OFF and then disconnect negative battery cable.

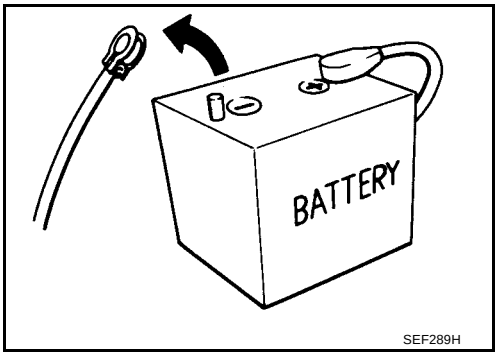

- Do not disassemble ECM.
- If battery cable is disconnected, the memory will return to the initial ECM values.
  The ECM will now start to self-control at its initial values. Engine operation can vary slightly when the cable is disconnected. However, this is not an indication of a malfunction. Do not replace parts because of a slight variation.
- If the battery is disconnected, the following emission related diagnostic information will be lost within 24 hours.
  - Diagnostic trouble codes
  - 1st trip diagnostic trouble codes
  - Freeze frame data
  - 1st freeze frame data
  - System readiness test (SRT) codes
  - Test values

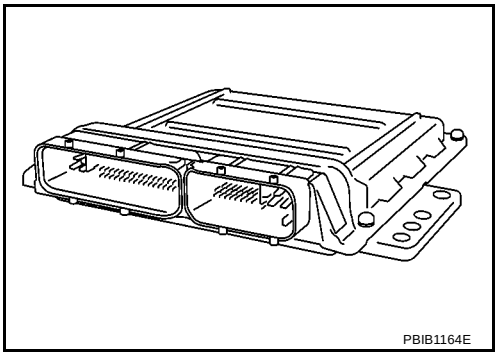

- When connecting ECM harness connector, fasten it securely with levers as far as they will go as shown in the figure.

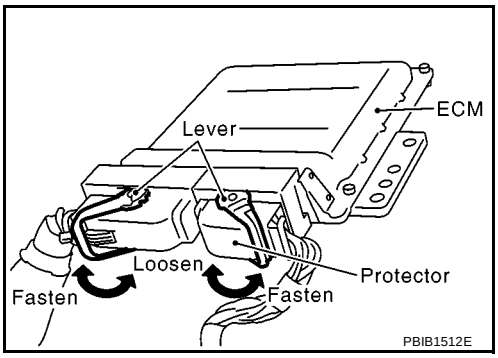

- When connecting or disconnecting pin connectors into or from ECM, take care not to damage pin terminals (bend or break).
  Make sure that there are not any bends or breaks on ECM pin terminal, when connecting pin connectors.

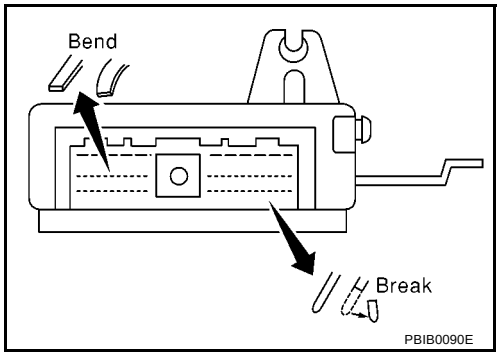

- Securely connect ECM harness connectors.
  A poor connection can cause an extremely high (surge) voltage to develop in coil and condenser, thus resulting in damage to ICs.
- Keep engine control system harness at least 10 cm (4 in) away from adjacent harness, to prevent engine control system malfunctions due to receiving external noise, degraded operation of ICs, etc.
- Keep engine control system parts and harness dry.
- Before replacing ECM, perform ECM Terminals and Reference Value inspection and make sure ECM functions properly. Refer to EC-95, "ECM Terminals and Reference Value" .

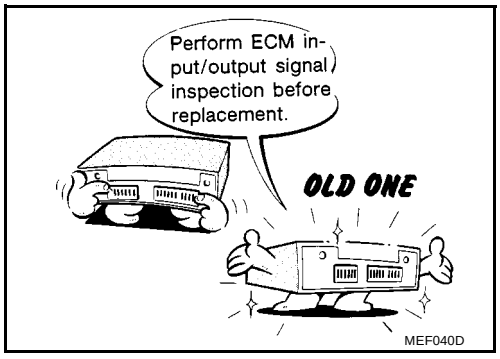

- Handle manifold absolute pressure sensor carefully to avoid damage.
- Do not clean air clear element with any type of detergent.
- Do not disassemble electric throttle control actuator.
- Even a slight leak in the air intake system can cause serious incidents.
- Do not shock or jar the camshaft position sensor (PHASE), crankshaft position sensor (POS).
- After performing each TROUBLE DIAGNOSIS, perform DTC Confirmation Procedure or Overall Function Check.
  The DTC should not be displayed in the DTC Confirmation Procedure if the repair is completed. The Overall Function Check should be a good result if the repair is completed.

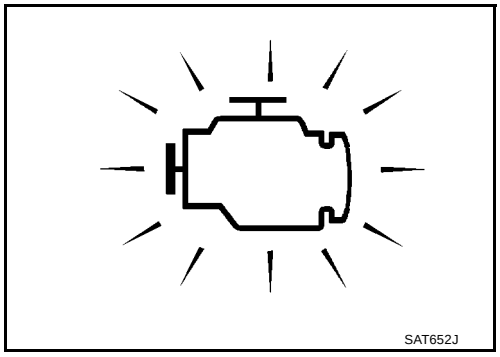

- **When measuring ECM signals with a circuit tester, connect a break-out box (SST) and Y-cable adapter (SST) between the ECM and ECM harness connector.**
- **When measuring ECM signals with a circuit tester, never allow the two tester probes to contact.**
  Accidental contact of probes will cause a short circuit and damage the ECM power transistor.
- **Do not use ECM ground terminals when measuring input/output voltage. Doing so may result in damage to the ECM's transistor. Use a ground other than ECM terminals, such as the ground.**

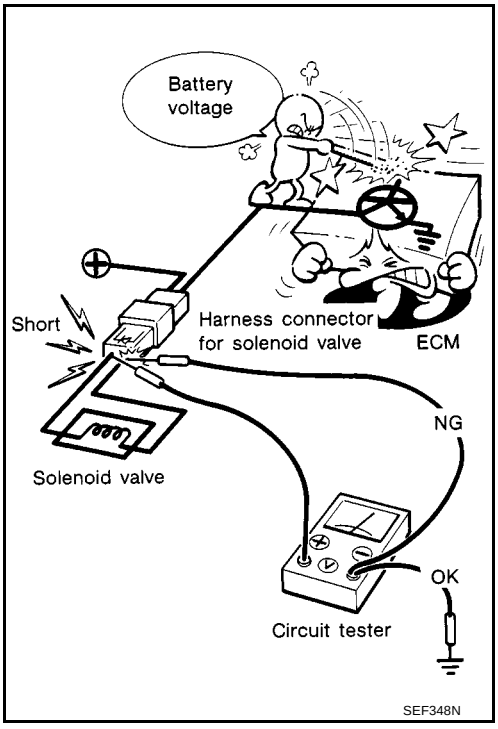

- **Do not operate fuel pump when there is no fuel in lines.**
- **Tighten fuel hose clamps to the specified torque.**

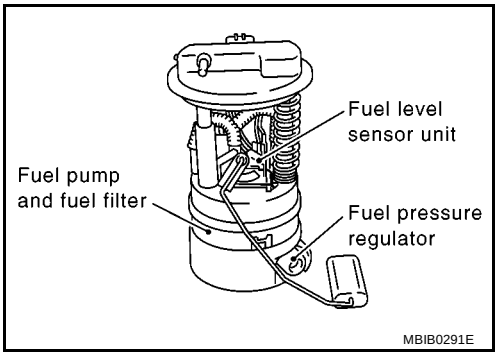

- **Do not depress accelerator pedal when starting.**
- **Immediately after starting, do not rev up engine unnecessarily.**
- **Do not rev up engine just prior to shutdown.**

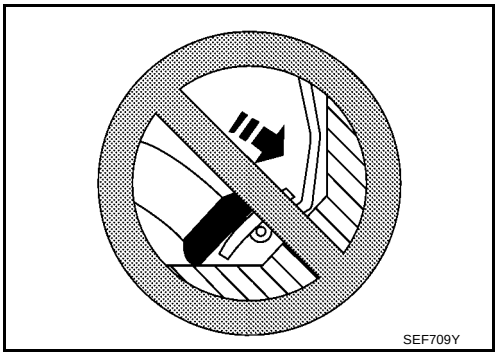

- **When installing C.B. ham radio or a mobile phone, be sure to observe the following as it may adversely affect electronic control systems depending on installation location.**
  - **Keep the antenna as far as possible from the electronic control units.**
  - **Keep the antenna feeder line more than 20 cm (8 in) away from the harness of electronic controls.**
    Do not let them run parallel for a long distance.
  - **Adjust the antenna and feeder line so that the standing-wave radio can be kept smaller.**
  - **Be sure to ground the radio to vehicle body.**

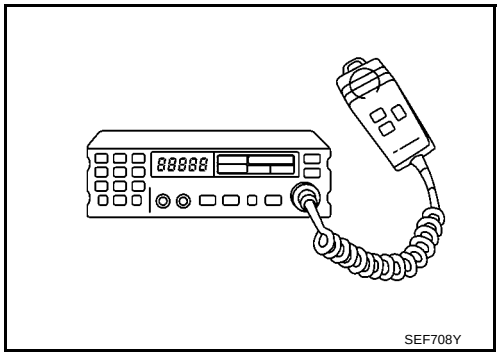

PREPARATION

PFP:00002

Special Service Tools

BBS002TG

Tool number Tool name		Description
EG17650301 Radiator cap tester adapter	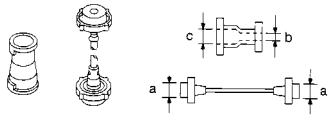 S-NT564	Adapting radiator cap tester to radiator cap and radiator filler neck **a: 28 (1.10) dia.** **b: 31.4 (1.236) dia.** **c: 41.3 (1.626) dia.** Unit: mm (in)
KV10117100 Heated oxygen sensor wrench	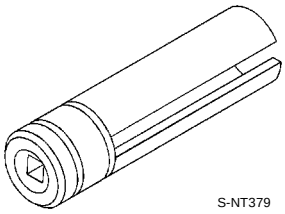 S-NT379	Loosening or tightening heated oxygen sensors with 22 mm (0.87 in) hexagon nut
KV10114400 Heated oxygen sensor wrench	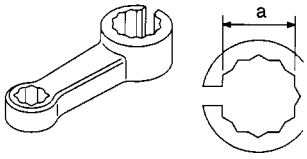 S-NT636	Loosening or tightening heated oxygen sensors **a: 22 mm (0.87 in)**
KV109E0010 Break-out box	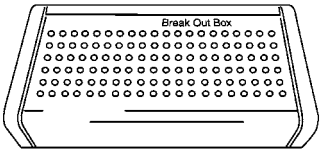 NT825	Measuring ECM signals with a circuit tester
KV109E0080 Y-cable adapter	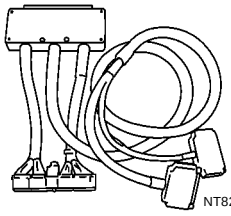 NT826	Measuring ECM signals with a circuit tester

Commercial Service Tools

BBS002TH

Tool name	Description
Quick connector release 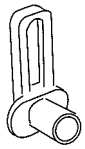 PBIC0198E	Removing fuel tube quick connectors in engine room (Available in SEC. 164 of PARTS CATALOG: Part No. 16441 6N210)
Fuel filler cap adapter S-NT653	Checking fuel tank vacuum relief valve opening pressure
Socket wrench 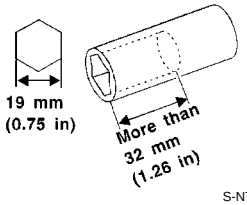 S-NT705	Removing and installing engine coolant temperature sensor
Oxygen sensor thread cleaner 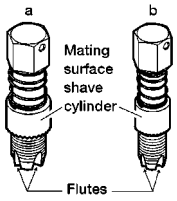 AEM488	Reconditioning the exhaust system threads before installing a new oxygen sensor. Use with anti-seize lubricant shown below. **a: 18 mm diameter with pitch 1.5 mm for Zirconia Oxygen Sensor** **b: 12 mm diameter with pitch 1.25 mm for Titania Oxygen Sensor**
Anti-seize lubricant i.e.: (Permatex™ 133AR or equivalent meeting MIL specification MIL-A-907) 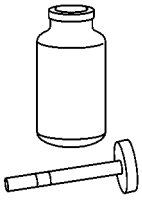 S-NT779	Lubricating oxygen sensor thread cleaning tool when reconditioning exhaust system threads.

ENGINE CONTROL SYSTEM

PFP:23710

System Diagram

BBS002TI

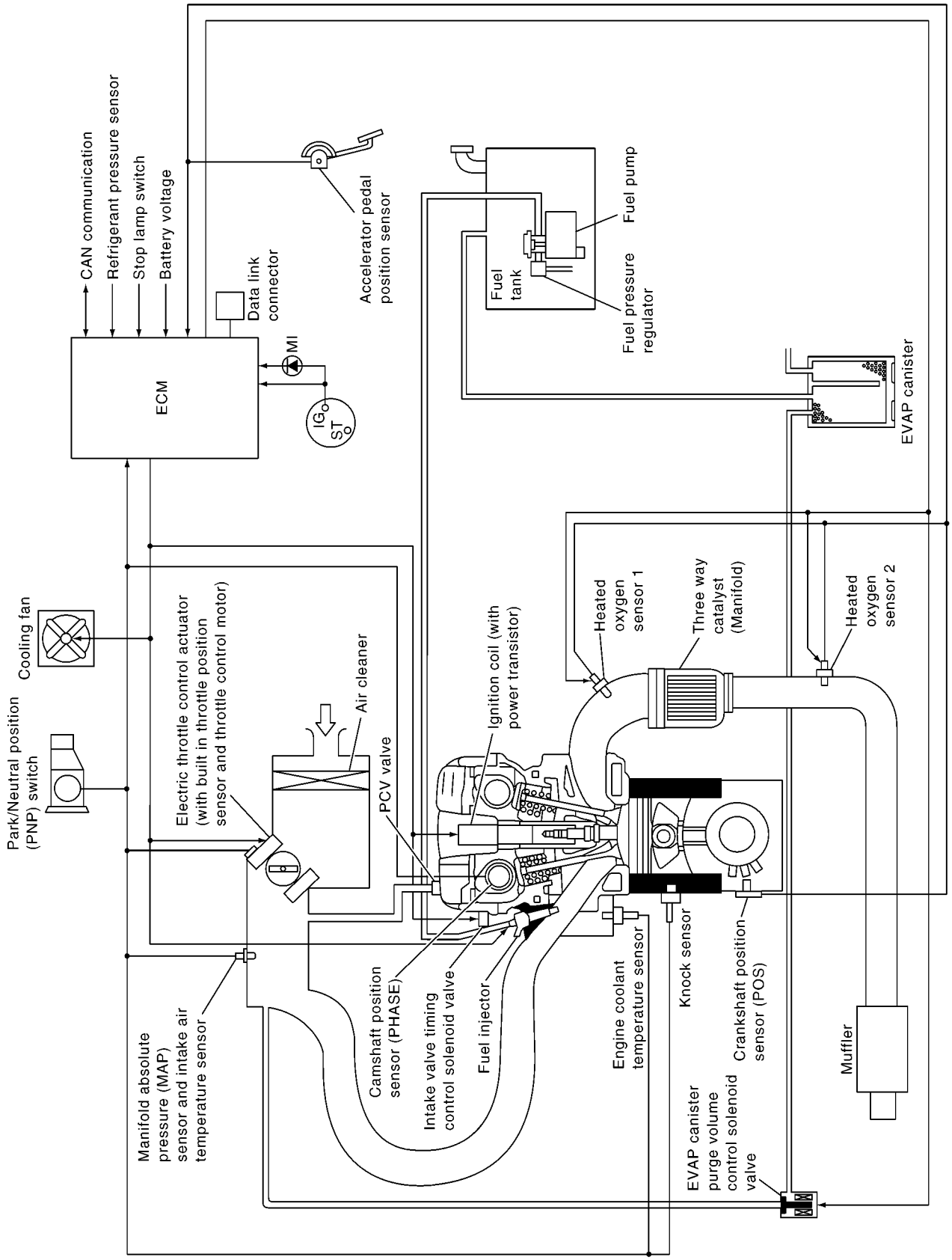

MBIB1551E

Multiport Fuel Injection (MFI) System

BBS002TL

INPUT/OUTPUT SIGNAL CHART

Sensor	Input Signal to ECM	ECM Function	Actuator
Crankshaft position sensor (POS) Camshaft position sensor (PHASE)	Engine speed*3 Piston position	Fuel injection & mixture ratio control	Fuel injector
Manifold absolute pressure sensor	Amount of intake air		
Engine coolant temperature sensor	Engine coolant temperature		
Heated oxygen sensor 1	Density of oxygen in exhaust gas		
Throttle position sensor	Throttle position		
Accelerator pedal position sensor	Accelerator pedal position		
Park/neutral position (PNP) switch	Gear position		
Knock sensor	Engine knocking condition		
Battery	Battery voltage*3		
EPS control unit	Power steering operation*2		
Heated oxygen sensor 2*1	Density of oxygen in exhaust gas		
Wheel sensor	Vehicle speed*2		
Air conditioner switch	Air conditioner operation*2		

*1: This sensor is not used to control the engine system under normal conditions.
*2: This signal is sent to the ECM through CAN communication line.
*3: ECM determines the start signal status by the signals of engine speed and battery voltage.

SYSTEM DESCRIPTION

The amount of fuel injected from the fuel injector is determined by the ECM. The ECM controls the length of time the valve remains open (injection pulse duration). The amount of fuel injected is a program value in the ECM memory. The program value is preset by engine operating conditions. These conditions are determined by input signals (for engine speed and intake air volume) from the crankshaft position sensor (POS), camshaft position sensor (PHASE) and the manifold absolute pressure sensor.

VARIOUS FUEL INJECTION INCREASE/DECREASE COMPENSATION

In addition, the amount of fuel injected is compensated to improve engine performance under various operating conditions as listed below.

<Fuel increase>

- During warm-up
- When starting the engine
- During acceleration
- Hot-engine operation
- High-load, high-speed operation

<Fuel decrease>

- During deceleration
- During high engine speed operation

MIXTURE RATIO FEEDBACK CONTROL (CLOSED LOOP CONTROL)

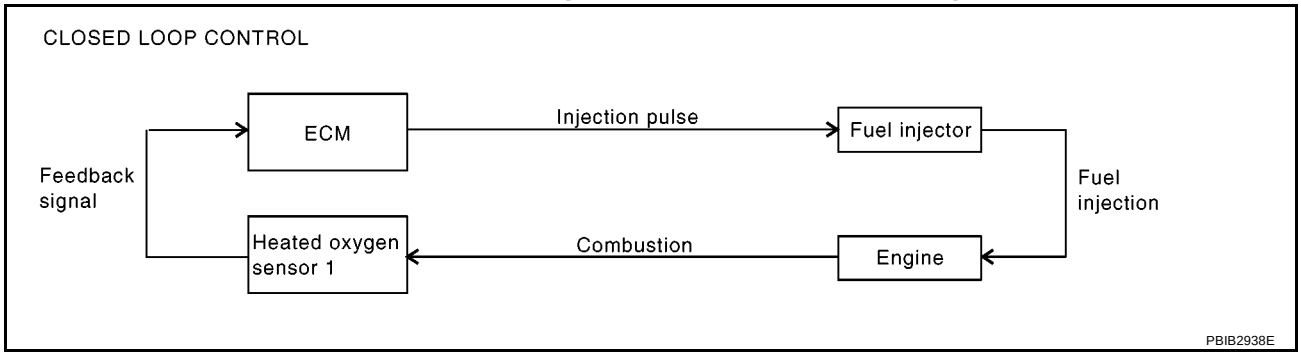

The mixture ratio feedback system provides the best air-fuel mixture ratio for driveability and emission control. The three way catalyst (manifold) can then better reduce CO, HC and NOx emissions. This system uses heated oxygen sensor 1 in the exhaust manifold to monitor whether the engine operation is rich or lean. The ECM adjusts the injection pulse width according to the sensor voltage signal. For more information about heated oxygen sensor 1, refer to EC-178 . This maintains the mixture ratio within the range of stoichiometric (ideal air-fuel mixture).
This stage is referred to as the closed loop control condition.
Heated oxygen sensor 2 is located downstream of the three way catalyst (manifold). Even if the switching characteristics of heated oxygen sensor 1 shift, the air-fuel ratio is controlled to stoichiometric by the signal from heated oxygen sensor 2.

Open Loop Control

The open loop system condition refers to when the ECM detects any of the following conditions.
Feedback control stops in order to maintain stabilized fuel combustion.

- Deceleration and acceleration
- High-load, high-speed operation
- Malfunction of heated oxygen sensor 1 or its circuit
- Insufficient activation of heated oxygen sensor 1 at low engine coolant temperature
- High engine coolant temperature
- During warm-up
- When starting the engine

MIXTURE RATIO SELF-LEARNING CONTROL

The mixture ratio feedback control system monitors the mixture ratio signal transmitted from heated oxygen sensor 1. This feedback signal is then sent to the ECM. The ECM controls the basic mixture ratio as close to the theoretical mixture ratio as possible. However, the basic mixture ratio is not necessarily controlled as originally designed. Both manufacturing differences (i.e., manifold absolute pressure sensor silicon diaphragm) and characteristic changes during operation (i.e., fuel injector clogging) directly affect mixture ratio.
Accordingly, the difference between the basic and theoretical mixture ratios is monitored in this system. This is then computed in terms of “injection pulse duration” to automatically compensate for the difference between the two ratios.
“Fuel trim” refers to the feedback compensation value compared against the basic injection duration. Fuel trim includes short term fuel trim and long term fuel trim.
“Short term fuel trim” is the short-term fuel compensation used to maintain the mixture ratio at its theoretical value. The signal from heated oxygen sensor 1 indicates whether the mixture ratio is RICH or LEAN compared to the theoretical value. The signal then triggers a reduction in fuel volume if the mixture ratio is rich, and an increase in fuel volume if it is lean.
“Long term fuel trim” is overall fuel compensation carried out long-term to compensate for continual deviation of the short term fuel trim from the central value. Such deviation will occur due to individual engine differences, wear over time and changes in the usage environment.

FUEL INJECTION TIMING

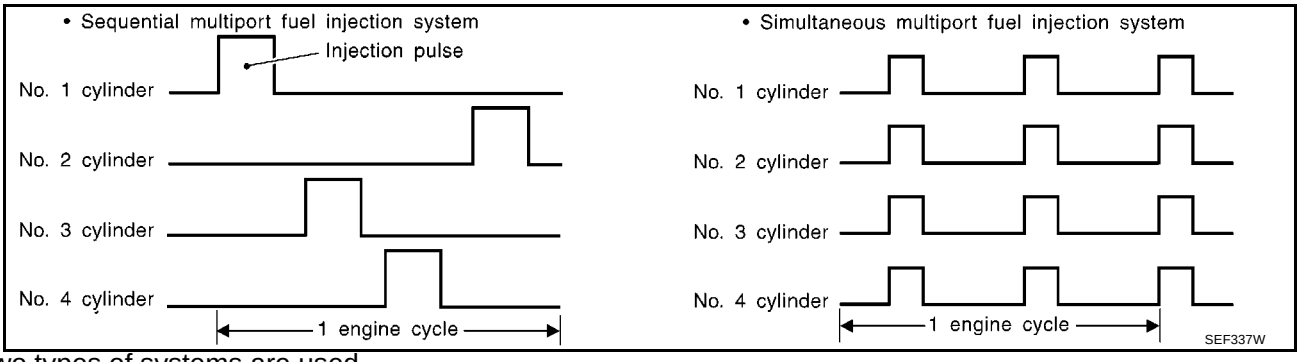

Two types of systems are used.

Sequential Multiport Fuel Injection System

Fuel is injected into each cylinder during each engine cycle according to the firing order. This system is used when the engine is running.

Simultaneous Multiport Fuel Injection System

Fuel is injected simultaneously into all four cylinders twice each engine cycle. In other words, pulse signals of the same width are simultaneously transmitted from the ECM.
The four fuel injectors will then receive the signals two times for each engine cycle.
This system is used when the engine is being started and/or if the fail-safe system (CPU) is operating.

FUEL SHUT-OFF

Fuel to each cylinder is cut off during deceleration or operation of the engine at excessively high speeds or operation of the vehicle at excessively high speeds.

Electronic Ignition (EI) System

BBS002TM

INPUT/OUTPUT SIGNAL CHART

Sensor	Input Signal to ECM	ECM Function	Actuator
Crankshaft position sensor (POS) Camshaft position sensor (PHASE)	Engine speed*2 Piston position	Ignition timing control	Power transistor
Manifold absolute pressure sensor	Amount of intake air		
Engine coolant temperature sensor	Engine coolant temperature		
Throttle position sensor	Throttle position		
Accelerator pedal position sensor	Accelerator pedal position		
Knock sensor	Engine knocking		
Park/neutral position (PNP) switch	Gear position		
Battery	Battery voltage*2		
Wheel sensor	Vehicle speed*1		

*1: This signal is sent to the ECM through CAN communication line.
*2: ECM determines the start signal status by the signals of engine speed and battery voltage.

SYSTEM DESCRIPTION

Firing order: 1 - 3 - 4 - 2
The ignition timing is controlled by the ECM to maintain the best air-fuel ratio for every running condition of the engine. The ignition timing data is stored in the ECM.
The ECM receives information such as the injection pulse width and camshaft position sensor signal. Computing this information, ignition signals are transmitted to the power transistor.
During the following conditions, the ignition timing is revised by the ECM according to the other data stored in the ECM.

- At starting
- During warm-up
- At idle
- At low battery voltage
- During acceleration

The knock sensor retard system is designed only for emergencies. The basic ignition timing is programmed within the anti-knocking zone, if recommended fuel is used under dry conditions. The retard system does not operate under normal driving conditions. If engine knocking occurs, the knock sensor monitors the condition. The signal is transmitted to the ECM. The ECM retards the ignition timing to eliminate the knocking condition.

Fuel Cut Control (at No Load and High Engine Speed)

BBS002TO

INPUT/OUTPUT SIGNAL CHART

Sensor	Input Signal to ECM	ECM Function	Actuator
Park/neutral position (PNP) switch	Neutral position	Fuel cut control	Fuel injector
Accelerator pedal position sensor	Accelerator pedal position		
Engine coolant temperature sensor	Engine coolant temperature		
Crankshaft position sensor (POS) Camshaft position sensor (PHASE)	Engine speed		
Wheel sensor	Vehicle speed*		

*: This signal is sent to the ECM through CAN communication line.

SYSTEM DESCRIPTION

If the engine speed is above 2,500 rpm with no load (for example, the shift position is neutral and engine speed is over 2,500 rpm) fuel will be cut off after some time. The exact time when the fuel is cut off varies based on engine speed.
Fuel cut will operate until the engine speed reaches 2,000 rpm, then fuel cut is cancelled.

NOTE:
This function is different from deceleration control listed under EC-34, "Multiport Fuel Injection (MFI) System" .

AIR CONDITIONING CUT CONTROL

PFP:23710

Input/Output Signal Chart

BBS003ZD

Sensor	Input Signal to ECM	ECM Function	Actuator
Air conditioner switch	Air conditioner ON signal*1	Air conditioner cut control	Air conditioner relay
Accelerator pedal position sensor	Accelerator pedal position		
Crankshaft position sensor (POS) Camshaft position sensor (PHASE)	Engine speed*2		
Engine coolant temperature sensor	Engine coolant temperature		
Refrigerant pressure sensor	Refrigerant pressure		
EPS control unit	Power steering operation*1		
Wheel sensor	Vehicle speed*1		
Battery	Battery voltage*2		

*1: This signal is sent to the ECM through CAN communication line.
*2: ECM determines the start signal status by the signals of engine speed and battery voltage.

SYSTEM DESCRIPTION

This system improves engine operation when the air conditioner is used.
Under the following conditions, the air conditioner is turned OFF.

- When the accelerator pedal is fully depressed.
- When cranking the engine.
- At high engine speeds.
- When the engine coolant temperature becomes excessively high.
- When operating power steering during low engine speed or low vehicle speed.
- When engine speed is excessively low.
- When refrigerant pressure is excessively low or high.

CAN COMMUNICATION

PFP:23710

System Description

BBS003ZE

CAN (Controller Area Network) is a serial communication line for real time application. It is an on-vehicle multiplex communication line with high data communication speed and excellent error detection ability. Many electronic control units are equipped onto a vehicle, and each control unit shares information and links with other control units during operation (not independent). In CAN communication, control units are connected with 2 communication lines (CAN H line, CAN L line) allowing a high rate of information transmission with less wiring. Each control unit transmits/receives data but selectively reads required data only.
Refer to LAN-21, "CAN COMMUNICATION" , about CAN communication for detail.

EVAPORATIVE EMISSION SYSTEM

PFP:14950

Description

BBS00343

SYSTEM DESCRIPTION

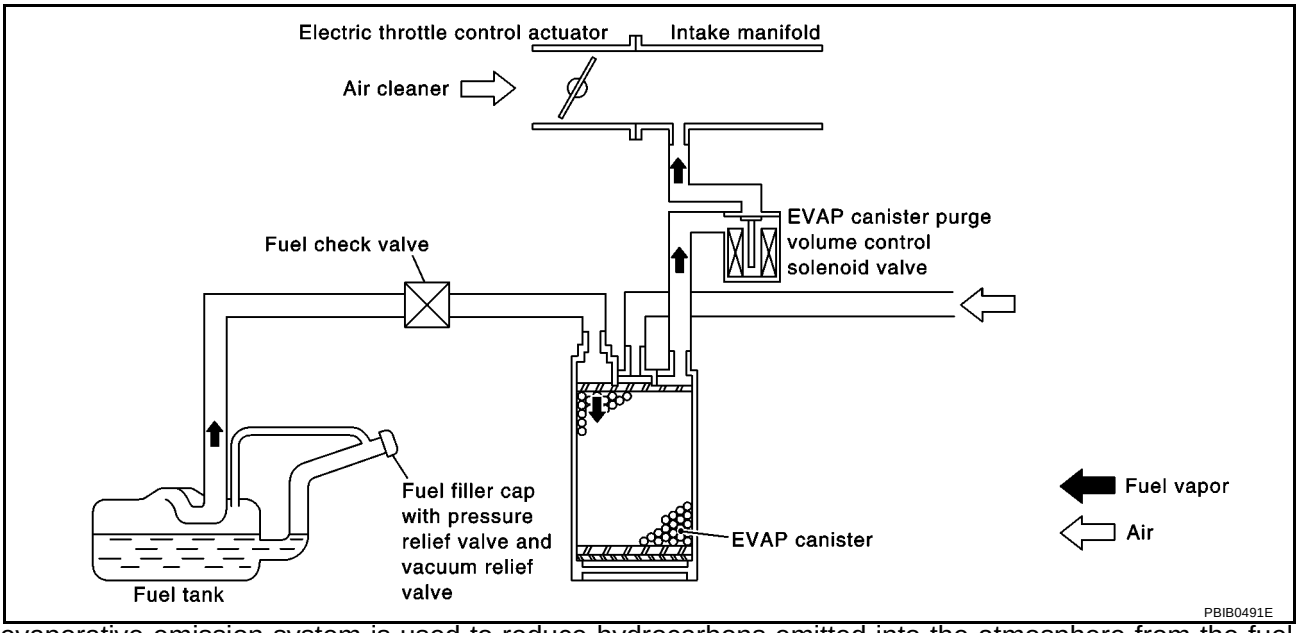

The evaporative emission system is used to reduce hydrocarbons emitted into the atmosphere from the fuel system. This reduction of hydrocarbons is accomplished by activated charcoals in the EVAP canister.

The fuel vapor in the sealed fuel tank is led into the EVAP canister which contains activated carbon and the vapor is stored there when the engine is not operating or when refueling to the fuel tank.

The vapor in the EVAP canister is purged by the air through the purge line to the intake manifold when the engine is operating. EVAP canister purge volume control solenoid valve is controlled by ECM. When the engine operates, the flow rate of vapor controlled by EVAP canister purge volume control solenoid valve is proportionally regulated as the air flow increases.

EVAP canister purge volume control solenoid valve also shuts off the vapor purge line during decelerating and idling.

EVAPORATIVE EMISSION LINE DRAWING

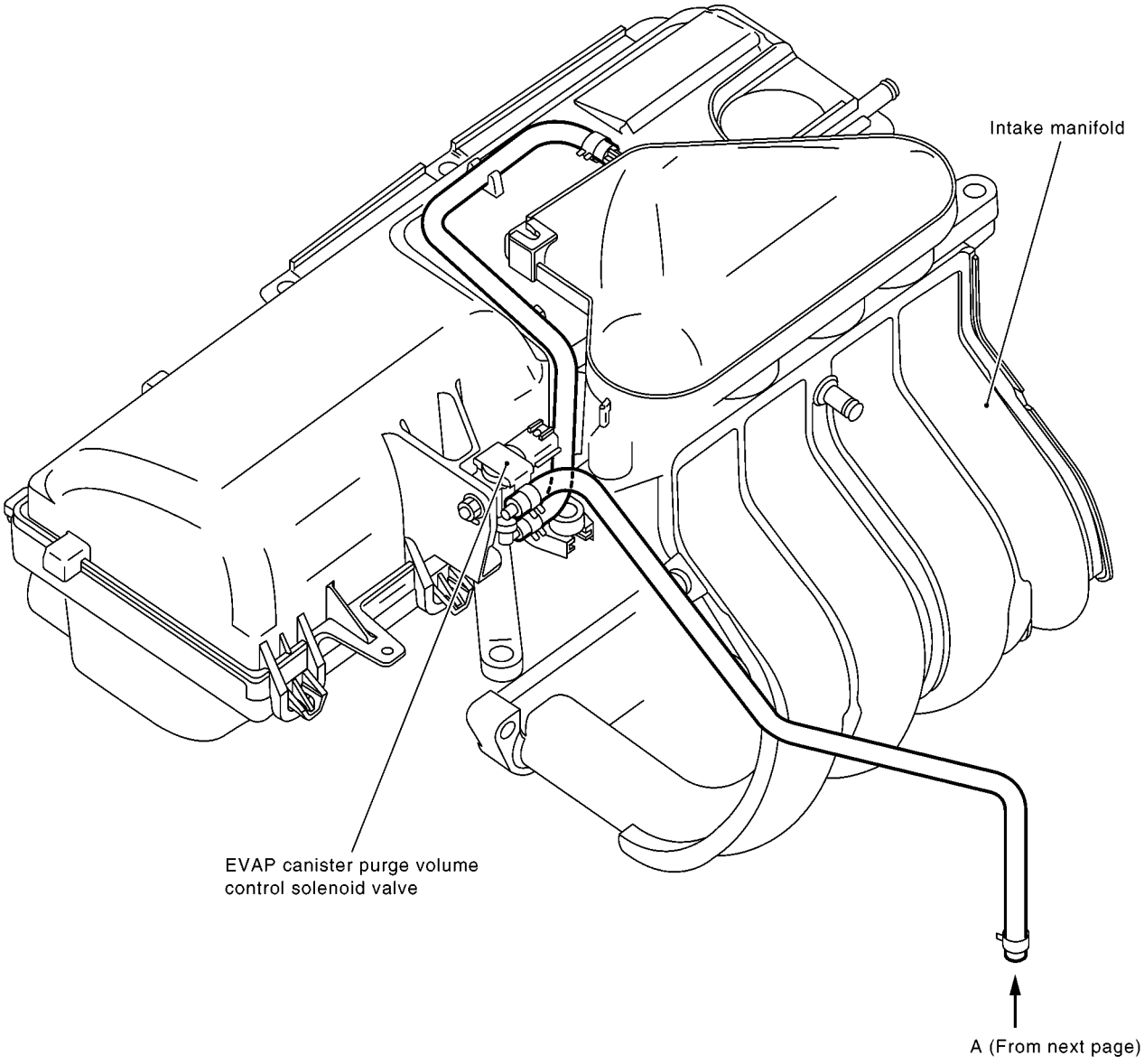

NOTE: Do not use soapy water or any type of solvent while installing vacuum hose or purge hoses.

MBIB0544E

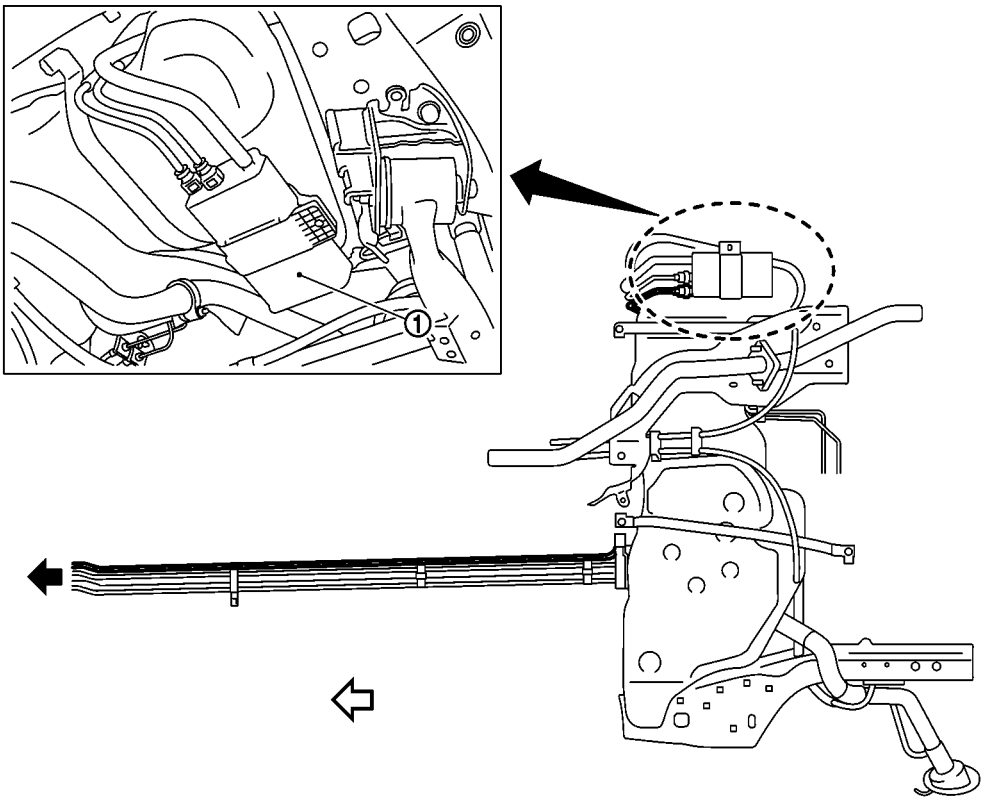

MBIB1450E

⇦: Vehicle front

⬅: To previous page

1. EVAP canister

Component Inspection

BBS00344

EVAP CANISTER

Check EVAP canister as follows:

1. Block port (B).
2. Blow air into port (A) and check that it flows freely out of port (C).
3. Release blocked port (B).
4. Apply vacuum pressure to port (B) and check that vacuum pressure exists at the ports (A) and (C).
5. Block port (A) and (B).
6. Apply pressure to port (C) and check that there is no leakage.

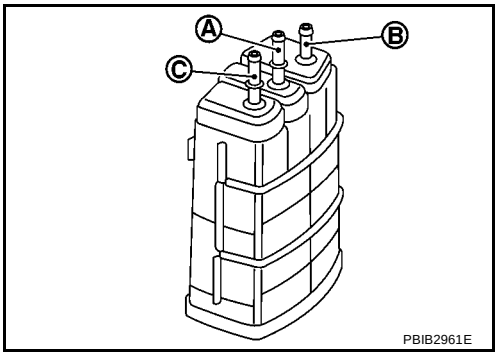

FUEL CHECK VALVE

1. Blow air through connector on fuel tank side.
   A considerable resistance should be felt and a portion of air flow should be directed toward the EVAP canister side.
2. Blow air through connector on EVAP canister side.
   Air flow should be smoothly directed toward fuel tank side.
3. If fuel check valve is suspected of not properly functioning in steps 1 and 2 above, replace it.

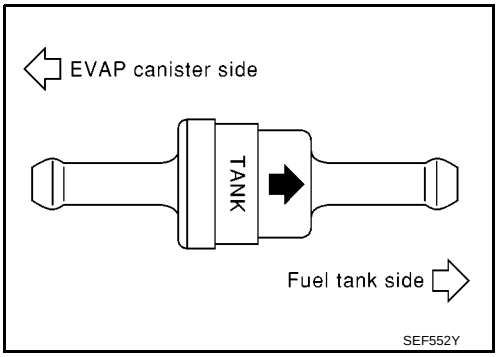

FUEL TANK VACUUM RELIEF VALVE (BUILT INTO FUEL FILLER CAP)

1. Wipe clean valve housing.

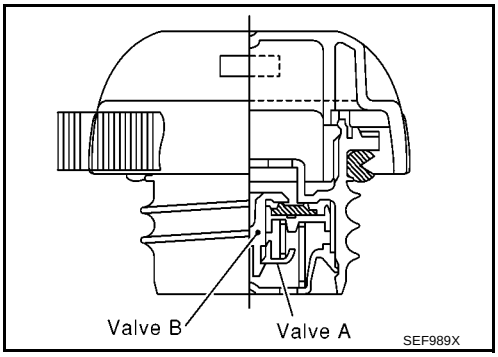

2. Check valve opening pressure and vacuum.

Pressure:	**15.3 - 20.0 kPa (0.153 - 0.200 bar, 0.156 - 0.204 kg/cm^2 , 2.22 - 2.90 psi)**
Vacuum:	**–6.0 to –3.4 kPa (–0.060 to –0.034 bar, –0.061 to –0.035 kg/cm^2 , –0.87 to –0.49 psi)**

3. If out of specification, replace fuel filler cap as an assembly.

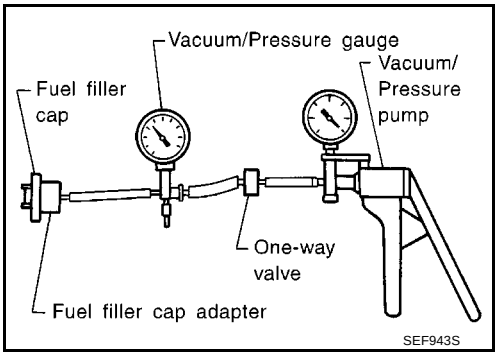

EVAP CANISTER PURGE VOLUME CONTROL SOLENOID VALVE

Refer to EC-275, "Component Inspection" .

NATS (NISSAN ANTI-THEFT SYSTEM)

PFP:25386

Description

BBS003ZF

- **If the security indicator lights up with the ignition switch in the ON position or "NATS MALFUNCTION" is displayed on "SELF-DIAG RESULTS" screen, perform self-diagnostic results mode with CONSULT-II using NATS program card. Refer to BL-215, "NATS (Nissan Anti-Theft System)" .**
- **Confirm no self-diagnostic results of NATS is displayed before touching "ERASE" in "SELF-DIAG RESULTS" mode with CONSULT-II.**
- **When replacing ECM, initialization of NATS system and registration of all NATS ignition key IDs must be carried out with CONSULT-II using NATS program card.**
  Therefore, be sure to receive all keys from vehicle owner.
  Regarding the procedures of NATS initialization and all NATS ignition key ID registration, refer to CONSULT-II Operation Manual, NATS.

SELF DIAG RESULTS	
DTC RESULTS	TIME
NATS MALFUNCTION [P1610]	0

SEF515Y

POSITIVE CRANKCASE VENTILATION

PFP:11810

Description

BBS00345

SYSTEM DESCRIPTION

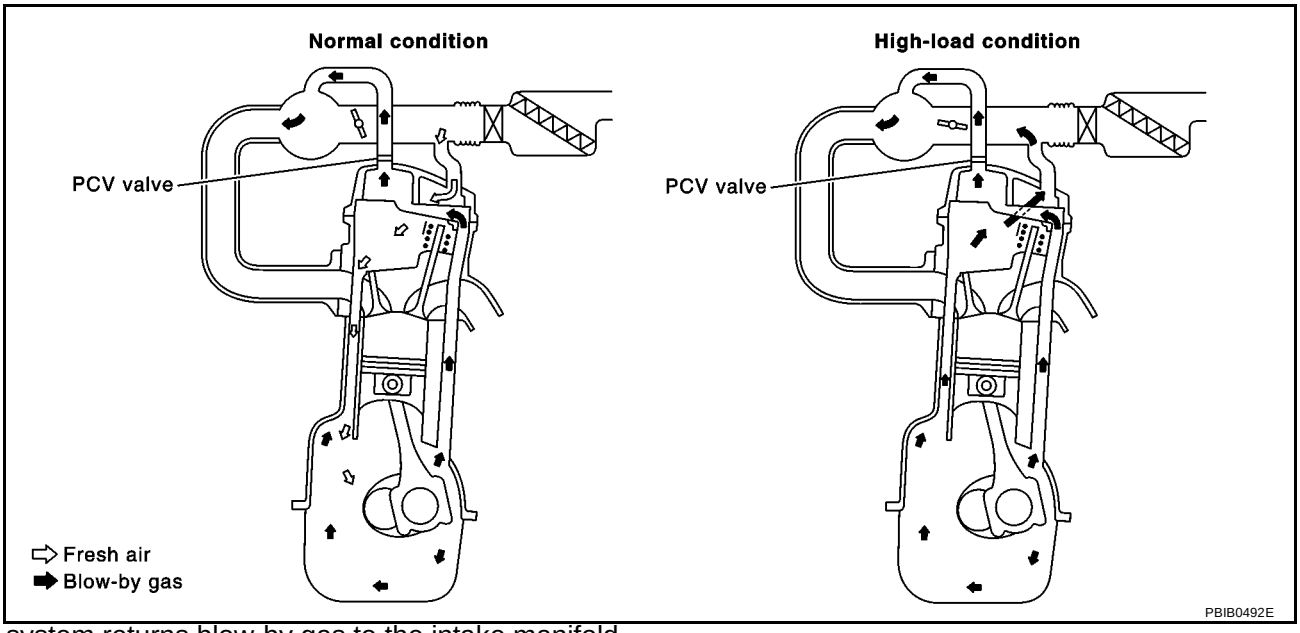

This system returns blow-by gas to the intake manifold.

The positive crankcase ventilation (PCV) valve is provided to conduct crankcase blow-by gas to the intake manifold. During partial throttle operation of the engine, the intake manifold sucks the blow-by gas through the PCV valve. Normally, the capacity of the valve is sufficient to handle any blow-by and a small amount of ventilating air. The ventilating air is then drawn from the air inlet tubes into the crankcase. In this process the air passes through the hose connecting air inlet tubes to rocker cover. Under full-throttle condition, the manifold vacuum is insufficient to draw the blow-by flow through the valve. The flow goes through the hose connection in the reverse direction.

On vehicles with an excessively high blow-by, the valve does not meet the requirement. This is because some of the flow will go through the hose connection to the air inlet tubes under all conditions.

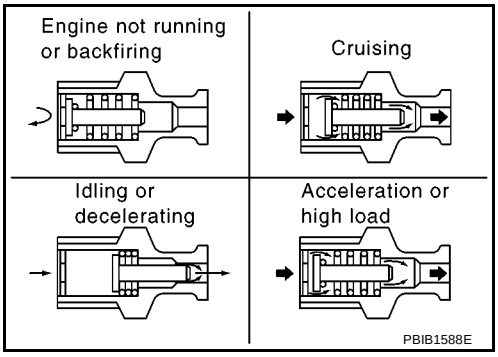

Component Inspection

BBS00346

PCV (POSITIVE CRANKCASE VENTILATION) VALVE

With engine running at idle, remove PCV valve from rocker cover. A properly working valve makes a hissing noise as air passes through it. A strong vacuum should be felt immediately when a finger is placed over valve inlet.

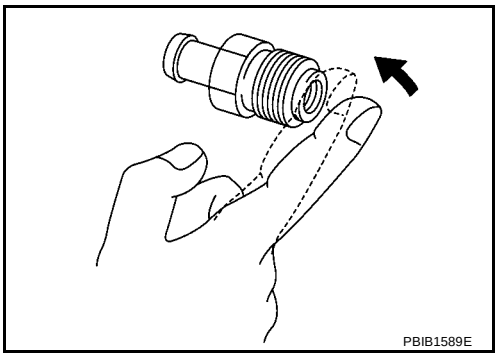

PCV VALVE VENTILATION HOSE

1. Check hoses and hose connections for leaks.
2. Disconnect all hoses and clean with compressed air. If any hose cannot be freed of obstructions, replace.

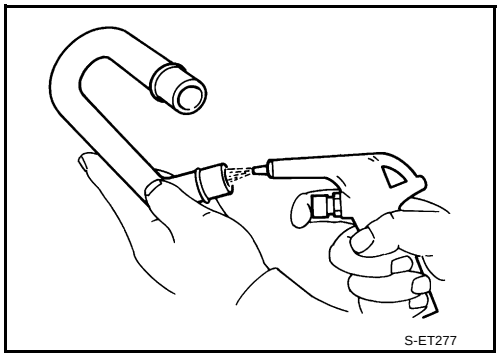

ON BOARD DIAGNOSTIC (OBD) SYSTEM

PFP:00028

Introduction

BBS002TV

The ECM has an on board diagnostic system, which detects malfunctions related to engine sensors or actuators. The ECM also records various emission-related diagnostic information including:

Emission-related diagnostic information	ISO Standard
Diagnostic Trouble Code (DTC)	Service $03 of ISO 15031-5
Freeze Frame data	Service $02 of ISO 15031-5
System Readiness Test (SRT) code	Service $01 of ISO 15031-5
1st Trip Diagnostic Trouble Code (1st Trip DTC)	Service $07 of ISO 15031-5
1st Trip Freeze Frame data	
Test values and Test limits	Service $06 of ISO 15031-5
Calibration ID	Service $09 of ISO 15031-5

The above information can be checked using procedures listed in the table below.

×: Applicable —: Not applicable

	DTC	1st trip DTC	Freeze Frame data	1st trip Freeze Frame data	SRT code	Test value
CONSULT-II	×	×	×	×	×	—
GST	×	×	×	—	×	×
ECM	×	×*	—	—	—	—

*: When DTC and 1st trip DTC simultaneously appear on the display, they cannot be clearly distinguished from each other.

The malfunction indicator (MI) on the instrument panel lights up when the same malfunction is detected in two consecutive trips (Two trip detection logic), or when the ECM enters fail-safe mode. (Refer to EC-81 .)

Two Trip Detection Logic

BBS002TW

When a malfunction is detected for the first time, 1st trip DTC and 1st trip Freeze Frame data are stored in the ECM memory. The MI will not light up at this stage. <1st trip>
If the same malfunction is detected again during the next drive, the DTC and Freeze Frame data are stored in the ECM memory, and the MI lights up. The MI lights up at the same time when the DTC is stored. <2nd trip>
The “trip” in the “Two Trip Detection Logic” means a driving mode in which self-diagnosis is performed during vehicle operation. Specific on board diagnostic items will cause the ECM to light up or blink the MI, and store DTC and Freeze Frame data, even in the 1st trip, as shown below.

×: Applicable —: Not applicable

Items	MI				DTC		1st trip DTC	
	1st trip		2nd trip		1st trip displaying	2nd trip displaying	1st trip displaying	2nd trip displaying
	Blinking	Lighting up	Blinking	Lighting up				
Misfire (Possible three way catalyst damage) — DTC: P0300 - P0304 is being detected	×	—	—	—	—	—	×	—
Misfire (Possible three way catalyst damage) — DTC: P0300 - P0304 is being detected	—	—	×	—	—	×	—	—
One trip detection diagnoses (Refer to EC-48)	—	×	—	—	×	—	—	—
Except above	—	—	—	×	—	×	×	—

When there is an open circuit on MI circuit, the ECM can not warn the driver by lighting up MI when there is a malfunction on engine control system.
Therefore, when electrical controlled throttle and part of ECM related diagnoses are continuously detected as NG for 5 trips, ECM warns the driver that engine control system has malfunction and MI circuit is open by means of operating fail-safe function.

The fail-safe function also operate when above diagnoses except MI circuit are detected and demands the driver to repair the malfunction.

Engine operating condition in fail-safe mode	Engine speed will not rise more than 2,500 rpm due to the fuel cut

Emission-related Diagnostic Information

BBS002TX

EMISSION-RELATED DIAGNOSTIC INFORMATION ITEMS

×: Applicable —: Not applicable

Items (CONSULT-II screen terms)	DTC*1		SRT code	Test Valve/ Test Limit (GST only)	Trip	MI lighting up	Reference page
	CONSULT-II GST*2	ECM*3					
CAN COMM CIRCUIT	U1001	1001*4	—	—	2	—	EC-134
CONTROL UNIT(CAN)	U1010	1010	—	—	2	—	EC-137
NO DTC IS DETECTED. FURTHER TESTING MAY BE REQUIRED.	**P0000**	**0000**	—	—	—	—	—
INT/V TIM CONT-B1	P0011	0011	—	—	2	—	EC-139
HO2S1 HTR (B1)	P0031	0031	×	×	2	×	EC-143
HO2S1 HTR (B1)	P0032	0032	×	×	2	×	EC-143
HO2S2 HTR (B1)	P0037	0037	×	×	2	×	EC-149
HO2S2 HTR (B1)	P0038	0038	×	×	2	×	EC-149
ABSL PRES SEN/CIRC	P0107	0107	—	—	2	×	EC-155
ABSL PRES SEN/CIRC	P0108	0108	—	—	2	×	EC-155
IAT SEN/CIRCUIT	P0112	0112	—	—	2	×	EC-161
IAT SEN/CIRCUIT	P0113	0113	—	—	2	×	EC-161
ECT SEN/CIRC	P0117	0117	—	—	1	×	EC-166
ECT SEN/CIRC	P0118	0118	—	—	1	×	EC-166
TP SEN 2/CIRC	P0122	0122	—	—	1	×	EC-171
TP SEN 2/CIRC	P0123	0123	—	—	1	×	EC-171
HO2S1 (B1)	P0132	0132	×	×	2	×	EC-178
HO2S1 (B1)	P0133	0133	×	×	2	×	EC-185
HO2S1 (B1)	P0134	0134	×	×	2	×	EC-195
HO2S2 (B1)	P0138	0138	×	×	2	×	EC-203
HO2S2 (B1)	P0139	0139	×	×	2	×	EC-210
FUEL SYS-LEAN-B1	P0171	0171	—	—	2	×	EC-218
FUEL SYS-RICH-B1	P0172	0172	—	—	2	×	EC-226
TP SEN 1/CIRC	P0222	0222	—	—	1	×	EC-233
TP SEN 1/CIRC	P0223	0223	—	—	1	×	EC-233
MULTI CYL MISFIRE	P0300	0300	—	—	2	×	EC-240
CYL 1 MISFIRE	P0301	0301	—	—	2	×	EC-240
CYL 2 MISFIRE	P0302	0302	—	—	2	×	EC-240
CYL 3 MISFIRE	P0303	0303	—	—	2	×	EC-240
CYL 4 MISFIRE	P0304	0304	—	—	2	×	EC-240
KNOCK SEN/CIRC-B1	P0327	0327	—	—	2	—	EC-246
KNOCK SEN/CIRC-B1	P0328	0328	—	—	2	—	EC-246
CKP SEN/CIRCUIT	P0335	0335	—	—	2	×	EC-250
CMP SEN/CIRC-B1	P0340	0340	—	—	2	×	EC-257
TW CATALYST SYS-B1	P0420	0420	×	×	2	×	EC-264
PURG VOLUME CONT/V	P0444	0444	—	—	2	×	EC-270

Items (CONSULT-II screen terms)	DTC*1		SRT code	Test Valve/ Test Limit (GST only)	Trip	MI lighting up	Reference page
	CONSULT-II GST*2	ECM*3					
VEH SPEED SEN/CIRC	P0500	0500	—	—	2	×	EC-277
ECM	P0605	0605	—	—	1 or 2	× or —	EC-279
ECM BACK UP/CIRCUIT	P1065	1065	—	—	2	×	EC-282
INT/V TIM V/CIR-B1	P1111	1111	—	—	2	×	EC-286
ETC ACTR	P1121	1121	—	—	1	×	EC-291
ETC FUNCTION/CIRC	P1122	1122	—	—	1	×	EC-293
ETC MOT PWR	P1124	1124	—	—	1	×	EC-299
ETC MOT PWR	P1126	1126	—	—	1	×	EC-299
ETC MOT	P1128	1128	—	—	1	×	EC-305
HO2S1 (B1)	P1143	1143	×	×	2	×	EC-310
HO2S1 (B1)	P1144	1144	×	×	2	×	EC-316
HO2S2 (B1)	P1146	1146	×	×	2	×	EC-322
HO2S2 (B1)	P1147	1147	×	×	2	×	EC-330
INTAKE ERROR	P1171	1171	—	—	1	×	EC-338
TCS C/U FUNCTN	P1211	1211	—	—	2	—	EC-343
TCS/CIRC	P1212	1212	—	—	2	—	EC-344
ENG OVER TEMP	P1217	1217	—	—	1	×	EC-345
CTP LEARNING	P1225	1225	—	—	2	—	EC-359
CTP LEARNING	P1226	1226	—	—	2	—	EC-361
SENSOR POWER/CIRC	P1229	1229	—	—	1	×	EC-363
NATS MALFUNCTION	P1610 - P1615	1610 - 1615	—	—	2	—	EC-44
P-N POS SW/CIRCUIT	P1706	1706	—	—	2	×	EC-371
BRAKE SW/CIRCUIT	P1805	1805	—	—	2	—	EC-377
APP SEN 1/CIRC	P2122	2122	—	—	1	×	EC-383
APP SEN 1/CIRC	P2123	2123	—	—	1	×	EC-383
APP SEN 2/CIRC	P2127	2127	—	—	1	×	EC-392
APP SEN 2/CIRC	P2128	2128	—	—	1	×	EC-392
TP SENSOR	P2135	2135	—	—	1	×	EC-402
APP SENSOR	P2138	2138	—	—	1	×	EC-409

*1: 1st trip DTC No. is the same as DTC No.
*2: This number is prescribed by ISO 15031-5.
*3: In Diagnostic Test Mode II (Self-diagnostic results), this number is controlled by NISSAN.
*4: The troubleshooting for this DTC needs CONSULT-II.

DTC AND 1ST TRIP DTC

The 1st trip DTC (whose number is the same as the DTC number) is displayed for the latest self-diagnostic result obtained. If the ECM memory was cleared previously, and the 1st trip DTC did not reoccur, the 1st trip DTC will not be displayed.
If a malfunction is detected during the 1st trip, the 1st trip DTC is stored in the ECM memory. The MI will not light up (two trip detection logic). If the same malfunction is not detected in the 2nd trip (meeting the required driving pattern), the 1st trip DTC is cleared from the ECM memory. If the same malfunction is detected in the 2nd trip, both the 1st trip DTC and DTC are stored in the ECM memory and the MI lights up. In other words, the DTC is stored in the ECM memory and the MI lights up when the same malfunction occurs in two consecutive trips. If a 1st trip DTC is stored and a non-diagnostic operation is performed between the 1st and 2nd trips, only the 1st trip DTC will continue to be stored. For malfunctions that blink or light up the MI during the 1st trip, the DTC and 1st trip DTC are stored in the ECM memory.

Procedures for clearing the DTC and the 1st trip DTC from the ECM memory are described in EC-57, "HOW TO ERASE EMISSION-RELATED DIAGNOSTIC INFORMATION" .
For malfunctions in which 1st trip DTCs are displayed, refer to EC-48, "EMISSION-RELATED DIAGNOSTIC INFORMATION ITEMS" . These items are required by legal regulations to continuously monitor the system/component. In addition, the items monitored non-continuously are also displayed on CONSULT-II.
1st trip DTC is specified in Service $07 of ISO 15031-5. 1st trip DTC detection occurs without lighting up the MI and therefore does not warn the driver of a malfunction. However, 1st trip DTC detection will not prevent the vehicle from being tested, for example during Inspection/Maintenance (I/M) tests.
When a 1st trip DTC is detected, check, print out or write down and erase (1st trip) DTC and Freeze Frame data as specified in Work Flow procedure Step 2, refer to EC-75, "WORK FLOW" . Then perform DTC Confirmation Procedure or Overall Function Check to try to duplicate the malfunction. If the malfunction is duplicated, the item requires repair.

How to Read DTC and 1st Trip DTC

DTC and 1st trip DTC can be read by the following methods.

With CONSULT-II

With GST

CONSULT-II or GST (Generic Scan Tool) Examples: P0112, P1217, P1805, etc.
These DTCs are prescribed by ISO 15031-5.
(CONSULT-II also displays the malfunctioning component or system.)

No Tools

The number of blinks of the MI in the Diagnostic Test Mode II (Self-Diagnostic Results) indicates the DTC. Example: 0112, 1217, 1805 etc.
These DTCs are controlled by NISSAN.

- **1st trip DTC No. is the same as DTC No.**
- **Output of a DTC indicates a malfunction. However, GST or the Diagnostic Test Mode II do not indicate whether the malfunction is still occurring or has occurred in the past and has returned to normal. CONSULT-II can identify malfunction status as shown below. Therefore, using CONSULT-II (if available) is recommended.**

A sample of CONSULT-II display for DTC and 1st trip DTC is shown below. DTC or 1st trip DTC of a malfunction is displayed in SELF-DIAGNOSTIC RESULTS mode of CONSULT-II. Time data indicates how many times the vehicle was driven after the last detection of a DTC.
If the DTC is being detected currently, the time data will be [0].
If a 1st trip DTC is stored in the ECM, the time data will be [1t].

DTC display

SELF DIAG RESULTS	
DTC RESULTS	TIME
CKP SEN/CIRCUIT [P0335]	0

1st trip DTC display

SELF DIAG RESULTS	
DTC RESULTS	TIME
CKP SEN/CIRCUIT [P0335]	1t

PBIB0911E

FREEZE FRAME DATA AND 1ST TRIP FREEZE FRAME DATA

The ECM records the driving conditions such as fuel system status, calculated load value, engine coolant temperature, short term fuel trim, long term fuel trim, engine speed, vehicle speed, base fuel schedule and intake air temperature at the moment a malfunction is detected.
Data which are stored in the ECM memory, along with the 1st trip DTC, are called 1st trip freeze frame data. The data, stored together with the DTC data, are called freeze frame data and displayed on CONSULT-II or GST. The 1st trip freeze frame data can only be displayed on the CONSULT-II screen, not on the GST. For details, see EC-104, "Freeze Frame Data and 1st Trip Freeze Frame Data" .
Only one set of freeze frame data (either 1st trip freeze frame data or freeze frame data) can be stored in the ECM. 1st trip freeze frame data is stored in the ECM memory along with the 1st trip DTC. There is no priority for 1st trip freeze frame data and it is updated each time a different 1st trip DTC is detected. However, once freeze frame data (2nd trip detection/MI on) is stored in the ECM memory, 1st trip freeze frame data is no longer stored. Remember, only one set of freeze frame data can be stored in the ECM. The ECM has the following priorities to update the data.

Priority	Items	
1	Freeze frame data	Misfire — DTC: P0300 - P0304 Fuel Injection System Function — DTC: P0171, P0172
2		Except the above items
3	1st trip freeze frame data	

For example, the EGR malfunction (Priority: 2) was detected and the freeze frame data was stored in the 2nd trip. After that when the misfire (Priority: 1) is detected in another trip, the freeze frame data will be updated from the EGR malfunction to the misfire. The 1st trip freeze frame data is updated each time a different malfunction is detected. There is no priority for 1st trip freeze frame data. However, once freeze frame data is stored in the ECM memory, 1st trip freeze data is no longer stored (because only one freeze frame data or 1st trip freeze frame data can be stored in the ECM). If freeze frame data is stored in the ECM memory and freeze frame data with the same priority occurs later, the first (original) freeze frame data remains unchanged in the ECM memory.
Both 1st trip freeze frame data and freeze frame data (along with the DTCs) are cleared when the ECM memory is erased. Procedures for clearing the ECM memory are described in EC-57, "HOW TO ERASE EMISSION-RELATED DIAGNOSTIC INFORMATION" .

SYSTEM READINESS TEST (SRT) CODE

System Readiness Test (SRT) code is specified in Service $01 of ISO 15031-5.
As part of an enhanced emissions test for Inspection & Maintenance (I/M), certain states require the status of SRT be used to indicate whether the ECM has completed self-diagnosis of major emission systems and components. Completion must be verified in order for the emissions inspection to proceed.
If a vehicle is rejected for a State emissions inspection due to one or more SRT items indicating “INCMP”, use the information in this Service Manual to set the SRT to “CMPLT”.
In most cases the ECM will automatically complete its self-diagnosis cycle during normal usage, and the SRT status will indicate “CMPLT” for each application system. Once set as “CMPLT”, the SRT status remains “CMPLT” until the self-diagnosis memory is erased.
Occasionally, certain portions of the self-diagnostic test may not be completed as a result of the customer's normal driving pattern; the SRT will indicate “INCMP” for these items.

NOTE:
The SRT will also indicate “INCMP” if the self-diagnosis memory is erased for any reason or if the ECM memory power supply is interrupted for several hours.
If, during the state emissions inspection, the SRT indicates “CMPLT” for all test items, the inspector will continue with the emissions test. However, if the SRT indicates “INCMP” for one or more of the SRT items the vehicle is returned to the customer untested.

NOTE:
If MI is ON during the state emissions inspection, the vehicle is also returned to the customer untested even though the SRT indicates “CMPLT” for all test items. Therefore, it is important to check SRT (“CMPLT”) and DTC (No DTCs) before the inspection.

SRT Item

The table below shows required self-diagnostic items to set the SRT to “CMPLT”.

SRT item (CONSULT-II indication)	Performance Priority*	Required self-diagnostic items to set the SRT to “CMPLT”	Corresponding DTC No.
CATALYST	2	Three way catalyst function	P0420
HO2S	1	Heated oxygen sensor 1	P0132
		Heated oxygen sensor 1	P0133
		Heated oxygen sensor 1	P0134
		Heated oxygen sensor 1	P1143
		Heated oxygen sensor 1	P1144
		Heated oxygen sensor 2	P0138
		Heated oxygen sensor 2	P0139
		Heated oxygen sensor 2	P1146
		Heated oxygen sensor 2	P1147

SRT item (CONSULT-II indication)	Performance Priority*	Required self-diagnostic items to set the SRT to “CMPLT”	Corresponding DTC No.
HO2S HTR	1	Heated oxygen sensor 1 heater	P0031, P0032
		Heated oxygen sensor 2 heater	P0037, P0038

*: If completion of several SRTs is required, perform driving patterns (DTC confirmation procedure), one by one based on the priority for models with CONSULT-II.

SRT Set Timing

SRT is set as “CMPLT” after self-diagnosis has been performed one or more times. Completion of SRT is done regardless of whether the result is OK or NG. The set timing is different between OK and NG results and is shown in the table below.

Self-diagnosis result		Example				
		Diagnosis	Ignition cycle ← ON →	OFF ← ON →	OFF ← ON →	OFF ← ON →
All OK	Case 1	P0400	OK (1)	— (1)	OK (2)	— (2)
		P0402	OK (1)	— (1)	— (1)	OK (2)
		P1402	OK (1)	OK (2)	— (2)	— (2)
		SRT of EGR	“CMPLT”	“CMPLT”	“CMPLT”	“CMPLT”
	Case 2	P0400	OK (1)	— (1)	— (1)	— (1)
		P0402	— (0)	— (0)	OK (1)	— (1)
		P1402	OK (1)	OK (2)	— (2)	— (2)
		SRT of EGR	“INCMP”	“INCMP”	“CMPLT”	“CMPLT”
NG exists	Case 3	P0400	OK	OK	—	—
		P0402	—	—	—	—
		P1402	NG	—	NG	NG (Consecutive NG)
		(1st trip) DTC	1st trip DTC	—	1st trip DTC	DTC (= MI “ON”)
		SRT of EGR	“INCMP”	“INCMP”	“INCMP”	“CMPLT”

OK: Self-diagnosis is carried out and the result is OK.
NG: Self-diagnosis is carried out and the result is NG.
—: Self-diagnosis is not carried out.

When all SRT related self-diagnoses showed OK results in a single cycle (Ignition OFF-ON-OFF), the SRT will indicate “CMPLT”. → Case 1 above
When all SRT related self-diagnoses showed OK results through several different cycles, the SRT will indicate “CMPLT” at the time the respective self-diagnoses have at least one OK result. → Case 2 above
If one or more SRT related self-diagnoses showed NG results in 2 consecutive cycles, the SRT will also indicate “CMPLT”. → Case 3 above
The table above shows that the minimum number of cycles for setting SRT as “INCMP” is one (1) for each self-diagnosis (Case 1 & 2) or two (2) for one of self-diagnoses (Case 3). However, in preparation for the state emissions inspection, it is unnecessary for each self-diagnosis to be executed twice (Case 3) for the following reasons:

- The SRT will indicate “CMPLT” at the time the respective self-diagnoses have one (1) OK result.
- The emissions inspection requires “CMPLT” of the SRT only with OK self-diagnosis results.
- When, during SRT driving pattern, 1st trip DTC (NG) is detected prior to “CMPLT” of SRT, the self-diagnosis memory must be erased from ECM after repair.
- If the 1st trip DTC is erased, all the SRT will indicate “INCMP”.

  NOTE:
  SRT can be set as “CMPLT” together with the DTC (s). Therefore, DTC check must always be carried out prior to the state emission inspection even though the SRT indicates “CMPLT”.

SRT Service Procedure

If a vehicle has failed the state emissions inspection due to one or more SRT items indicating “INCMP”, review the flowchart diagnostic sequence on the next page.

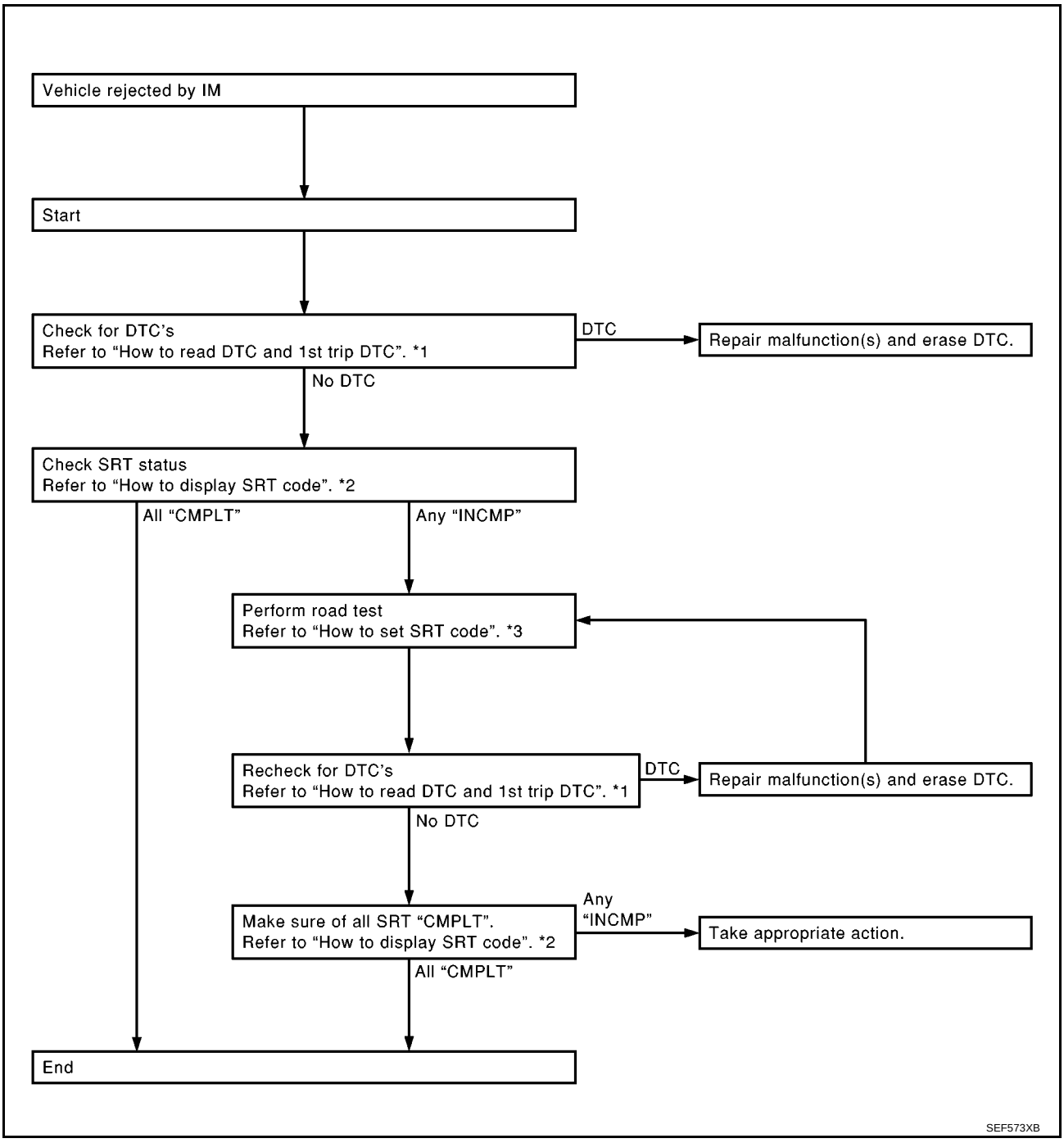

*1 EC-50 *2 EC-54 *3 EC-54

How to Display SRT Code

WITH CONSULT-II

Selecting “SRT STATUS” in “DTC & SRT CONFIRMATION” mode with CONSULT-II.

For items whose SRT codes are set, a “CMPLT” is displayed on the CONSULT-II screen; for items whose SRT codes are not set, “INCMP” is displayed.

A sample of CONSULT-II display for SRT code is shown at right.

“INCMP” means the self-diagnosis is incomplete and SRT is not set.

“CMPLT” means the self-diagnosis is complete and SRT is set.

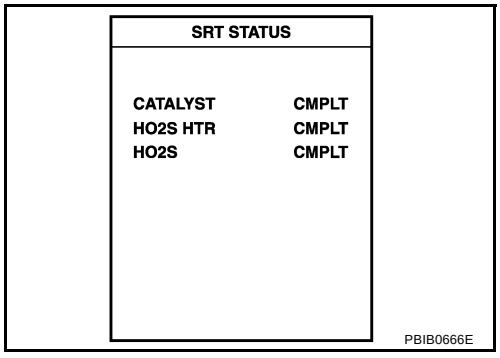

WITH GST

Selecting Service $01 with GST (Generic Scan Tool)

How to Set SRT Code

To set all SRT codes, self-diagnosis for the items indicated above must be performed one or more times. Each diagnosis may require a long period of actual driving under various conditions.

WITH CONSULT-II

Perform corresponding DTC Confirmation Procedure one by one based on Performance Priority in the table on EC-51 .

WITHOUT CONSULT-II

The most efficient driving pattern in which SRT codes can be properly set is explained on the next page. The driving pattern should be performed one or more times to set all SRT codes.

Driving Pattern

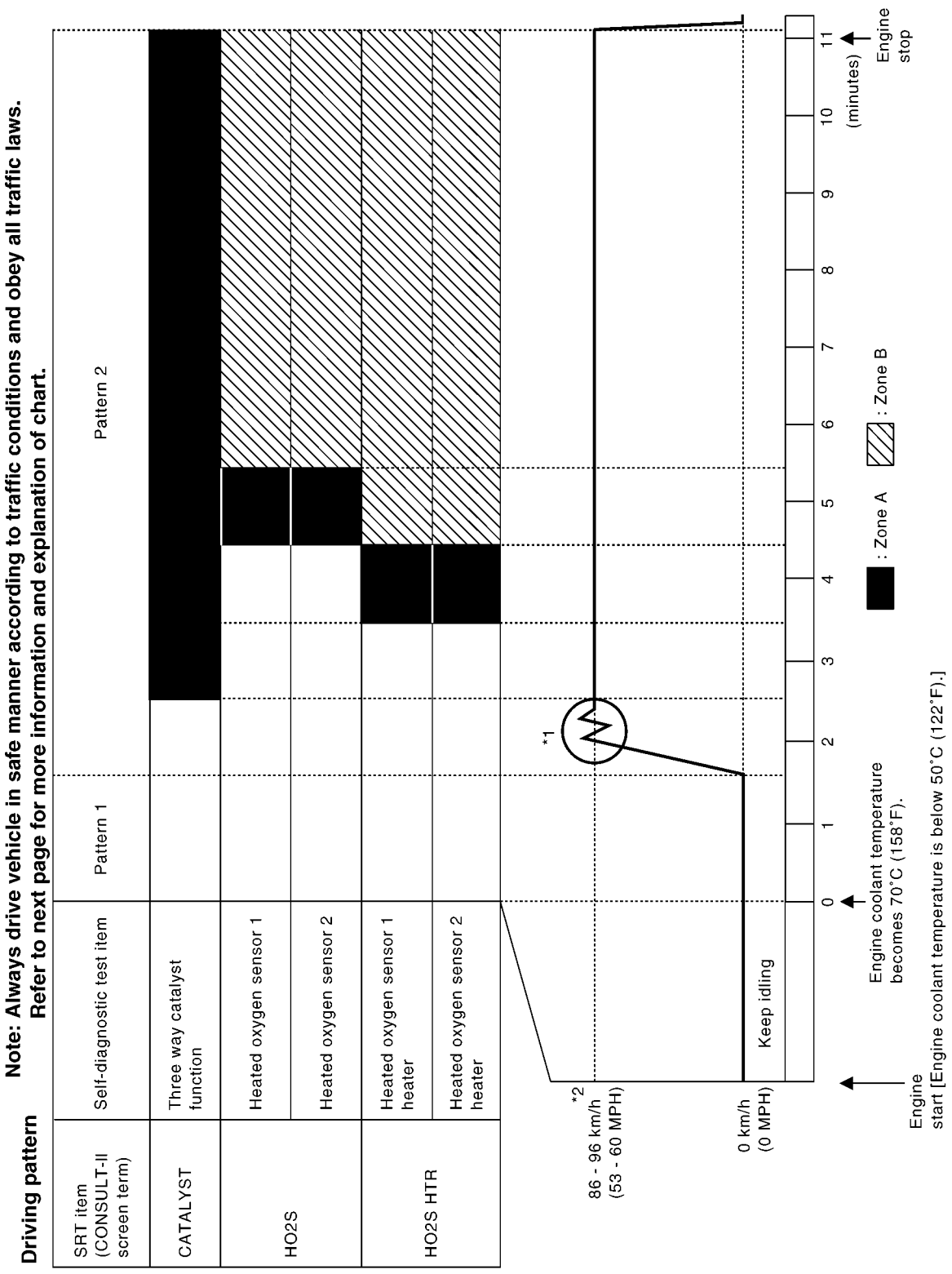

PBIB2451E

- The time required for each diagnosis varies with road surface conditions, weather, altitude, individual driving habits, etc.
  Zone A refers to the range where the time, required for the diagnosis under normal conditions*, is the shortest.
  Zone B refers to the range where the diagnosis can still be performed if the diagnosis is not completed within zone A.

*: Normal conditions refer to the following:

- Sea level
- Flat road
- Ambient air temperature: 20 - 30°C (68 - 86°F)
- Diagnosis is performed as quickly as possible under normal conditions.
  Under different conditions [For example: ambient air temperature other than 20 - 30°C (68 - 86°F)], diagnosis may also be performed.

Pattern 1:

- **The engine is started at the engine coolant temperature of –10 to 35°C (14 to 95°F) (where the voltage between the ECM terminal 72 and ground is 3.0 - 4.3V).**
- **The engine must be operated at idle speed until the engine coolant temperature is greater than 70°C (158°F) (where the voltage between the ECM terminal 72 and ground is lower than 1.4V).**

Pattern 2:

- When steady-state driving is performed again even after it is interrupted, each diagnosis can be conducted. In this case, the time required for diagnosis may be extended.

*1: Depress the accelerator pedal until vehicle speed is 90 km/h (56 MPH), then release the accelerator pedal and keep it released for more than 10 seconds. Depress the accelerator pedal until vehicle speed is 90 km/h (56 MPH) again.
*2: Checking the vehicle speed with GST is advised.

TEST VALUE AND TEST LIMIT (GST ONLY — NOT APPLICABLE TO CONSULT-II)

The following is the information specified in Service $06 of ISO 15031-5.
The test value is a parameter used to determine whether a system/circuit diagnostic test is OK or NG while being monitored by the ECM during self-diagnosis. The test limit is a reference value which is specified as the maximum or minimum value and is compared with the test value being monitored.
These data (test value and test limit) are specified by Test ID (TID) and Component ID (CID) and can be displayed on the GST screen.

SRT item	Self-diagnostic test item	DTC	Test value (GST display)		Test limit
			TID	CID	
CATALYST	Three way catalyst function	P0420	01H	01H	Max.
		P0420	02H	81H	Min.
HO2S	Heated oxygen sensor 1	P0133	09H	04H	Max.
		P1143	0AH	84H	Min.
		P1144	0BH	04H	Max.
		P0132	0CH	04H	Max.
		P0134	0DH	04H	Max.
	Heated oxygen sensor 2	P0139	19H	86H	Min.
		P1147	1AH	86H	Min.
		P1146	1BH	06H	Max.
		P0138	1CH	06H	Max.
HO2S HTR	Heated oxygen sensor 1 heater	P0032	29H	08H	Max.
		P0031	2AH	88H	Min.
	Heated oxygen sensor 2 heater	P0038	2DH	0AH	Max.
		P0037	2EH	8AH	Min.

HOW TO ERASE EMISSION-RELATED DIAGNOSTIC INFORMATION

How to Erase DTC

With CONSULT-II

The emission related diagnostic information in the ECM can be erased by selecting “ERASE” in the “SELF-DIAG RESULTS” mode with CONSULT-II.

1. If the ignition switch stays ON after repair work, be sure to turn ignition switch OFF once.
   Wait at least 10 seconds and then turn it ON (engine stopped) again.
2. Touch “ENGINE”.
3. Touch “SELF-DIAG RESULTS”.
4. Touch “ERASE”. (The DTC in the ECM will be erased.)

How to erase DTC (With CONSULT-II)

1. If the ignition switch stays “ON” after repair work, be sure to turn ignition switch “OFF” once.
   Wait at least 10 seconds and then turn it “ON” again.

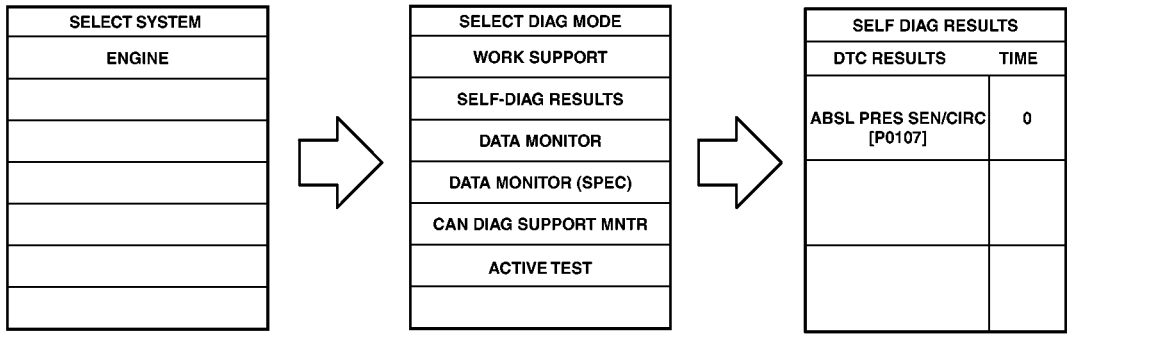

2. Turn **CONSULT-II** “ON” and touch “ENGINE”.
3. Touch “SELF-DIAG RESULTS”.
4. Touch “ERASE”. (The DTC in the ECM will be erased.)

MBIB1303E

With GST

The emission related diagnostic information in the ECM can be erased by selecting Service $04 with GST.

1. If the ignition switch stays ON after repair work, be sure to turn ignition switch OFF once.
   Wait at least 10 seconds and then turn it ON (engine stopped) again.
2. Select Service $04 with GST (Generic Scan Tool).

No Tools

1. If the ignition switch stays ON after repair work, be sure to turn ignition switch OFF once.
2. Wait at least 10 seconds and then turn it ON (engine stopped) again.
3. Change the diagnostic test mode from Mode II to Mode I by depressing the accelerator pedal. Refer to EC-59, "HOW TO SWITCH DIAGNOSTIC TEST MODE" .

- **If the battery is disconnected, the emission-related diagnostic information will be lost within 24 hours.**
- **The following data are cleared when the ECM memory is erased.**
  - Diagnostic trouble codes
  - 1st trip diagnostic trouble codes
  - Freeze frame data
  - 1st trip freeze frame data
  - System readiness test (SRT) codes
  - Test values

Actual work procedures are explained using a DTC as an example. Be careful so that not only the DTC, but all of the data listed above, are cleared from the ECM memory during work procedures.

Malfunction Indicator (MI)

BBS002TZ

DESCRIPTION

The MI is located on the instrument panel.

1. The MI will light up when the ignition switch is turned ON without the engine running. This is a bulb check.
   If the MI does not light up, refer to DI-32, "WARNING LAMPS" or see EC-448 .
2. When the engine is started, the MI should go off.
   If the MI remains on, the on board diagnostic system has detected an engine system malfunction.

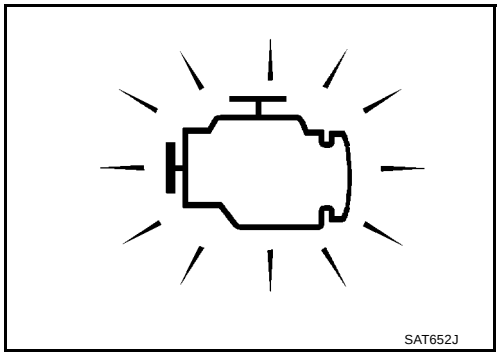

ON BOARD DIAGNOSTIC SYSTEM FUNCTION

The on board diagnostic system has the following four functions.

Diagnostic Test Mode	KEY and ENG. Status	Function	Explanation of Function
Mode I	Ignition switch in ON position Engine stopped	BULB CHECK	This function checks the MI bulb for damage (blown, open circuit, etc.). If the MI does not come on, check MI circuit.
	Engine running	MALFUNCTION WARNING	This is a usual driving condition. When a malfunction is detected twice in two consecutive driving cycles (two trip detection logic), the MI will light up to inform the driver that a malfunction has been detected. The following malfunctions will light up or blink the MI in the 1st trip. ● Misfire (Possible three way catalyst damage) ● One trip detection diagnoses
Mode II	Ignition switch in ON position Engine stopped	SELF-DIAGNOSTIC RESULTS	This function allows DTCs and 1st trip DTCs to be read.
	Engine running	HEATED OXYGEN SENSOR 1 MONITOR	This function allows the fuel mixture condition (lean or rich), monitored by heated oxygen sensor 1, to be read.

When there is an open circuit on MI circuit, the ECM can not warn the driver by lighting up MI when there is malfunction on engine control system.
Therefore, when electrical controlled throttle and part of ECM related diagnoses are continuously detected as NG for 5 trips, ECM warns the driver that engine control system has a malfunction and MI circuit is open by means of operating fail-safe function.
The fail-safe function also operate when above diagnoses except MI circuit are detected and demands the driver to repair the a malfunction.

Engine operating condition in fail-safe mode	Engine speed will not rise more than 2,500 rpm due to the fuel cut

MI Flashing without DTC

If the ECM is in Diagnostic Test Mode II, MI may flash when engine is running. In this case, check ECM diagnostic test mode. EC-59, "HOW TO SWITCH DIAGNOSTIC TEST MODE" .
How to switch the diagnostic test (function) modes, and details of the above functions are described later, EC-59, "HOW TO SWITCH DIAGNOSTIC TEST MODE" .
The following emission-related diagnostic information is cleared when the ECM memory is erased.

- Diagnostic trouble codes
- 1st trip diagnostic trouble codes
- Freeze frame data
- 1st trip freeze frame data
- System readiness test (SRT) codes
- Test values

HOW TO SWITCH DIAGNOSTIC TEST MODE

NOTE:

- **It is better to count the time accurately with a clock.**
- **It is impossible to switch the diagnostic mode when an accelerator pedal position sensor circuit has a malfunction.**
- **Always ECM returns to Diagnostic Test Mode I after ignition switch is turned OFF.**

How to Set Diagnostic Test Mode II (Self-diagnostic Results)

1. Confirm that accelerator pedal is fully released, turn ignition switch ON and wait 3 seconds.
2. Repeat the following procedure quickly five times within 5 seconds.

a. Fully depress the accelerator pedal.
b. Fully release the accelerator pedal.

3. Wait 7 seconds, fully depress the accelerator pedal and keep it for approx. 10 seconds until the MI starts blinking.
4. Fully release the accelerator pedal.
   ECM has entered to Diagnostic Test Mode II (Self-diagnostic results).

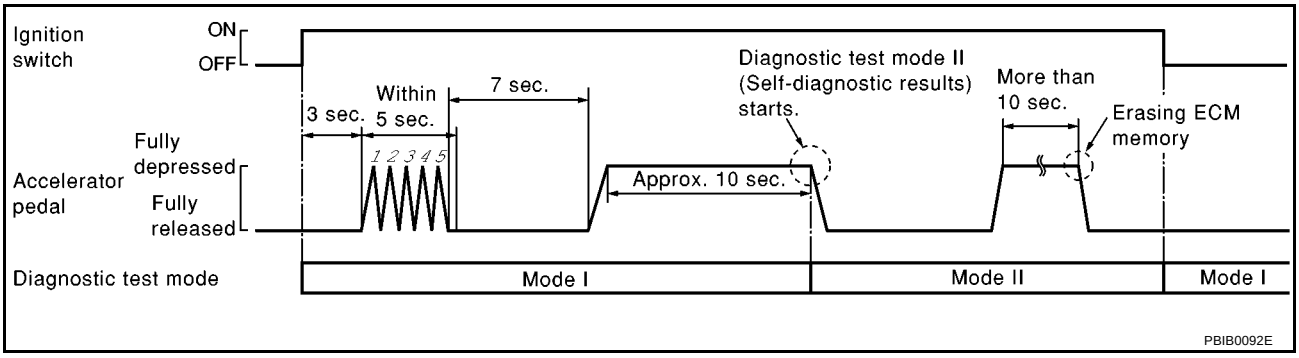

How to Set Diagnostic Test Mode II (Heated Oxygen Sensor 1 Monitor)

1. Set the ECM in Diagnostic Test Mode II (Self-diagnostic results). Refer to EC-59, "How to Set Diagnostic Test Mode II (Self-diagnostic Results)" .
2. Start Engine.
   ECM has entered to Diagnostic Test Mode II (Heated oxygen sensor 1 monitor).

How to Erase Diagnostic Test Mode II (Self-diagnostic Results)

1. Set ECM in Diagnostic Test Mode II (Self-diagnostic results). Refer to EC-59, "How to Erase Diagnostic Test Mode II (Self-diagnostic Results)" .
2. Fully depress the accelerator pedal and keep it for more than 10 seconds.
   The emission-related diagnostic information has been erased from the backup memory in the ECM.
3. Fully release the accelerator pedal, and confirm the DTC 0000 is displayed.

DIAGNOSTIC TEST MODE I — BULB CHECK

In this mode, the MI on the instrument panel should stay ON. If it remains OFF, check the bulb. Refer to DI-32, "WARNING LAMPS" or see EC-448 .

DIAGNOSTIC TEST MODE I — MALFUNCTION WARNING

MI	Condition
ON	When the malfunction is detected.
OFF	No malfunction.

- These DTC numbers are clarified in Diagnostic Test Mode II (SELF-DIAGNOSTIC RESULTS)

DIAGNOSTIC TEST MODE II — SELF-DIAGNOSTIC RESULTS

In this mode, the DTC and 1st trip DTC are indicated by the number of blinks of the MI as shown below.
The DTC and 1st trip DTC are displayed at the same time. If the MI does not illuminate in diagnostic test mode I (Malfunction warning), all displayed items are 1st trip DTCs. If only one code is displayed when the MI illuminates in diagnostic test mode II (SELF-DIAGNOSTIC RESULTS), it is a DTC; if two or more codes are displayed, they may be either DTCs or 1st trip DTCs. DTC No. is same as that of 1st trip DTC. These unidentified codes can be identified by using the CONSULT-II or GST. A DTC will be used as an example for how to read a code.

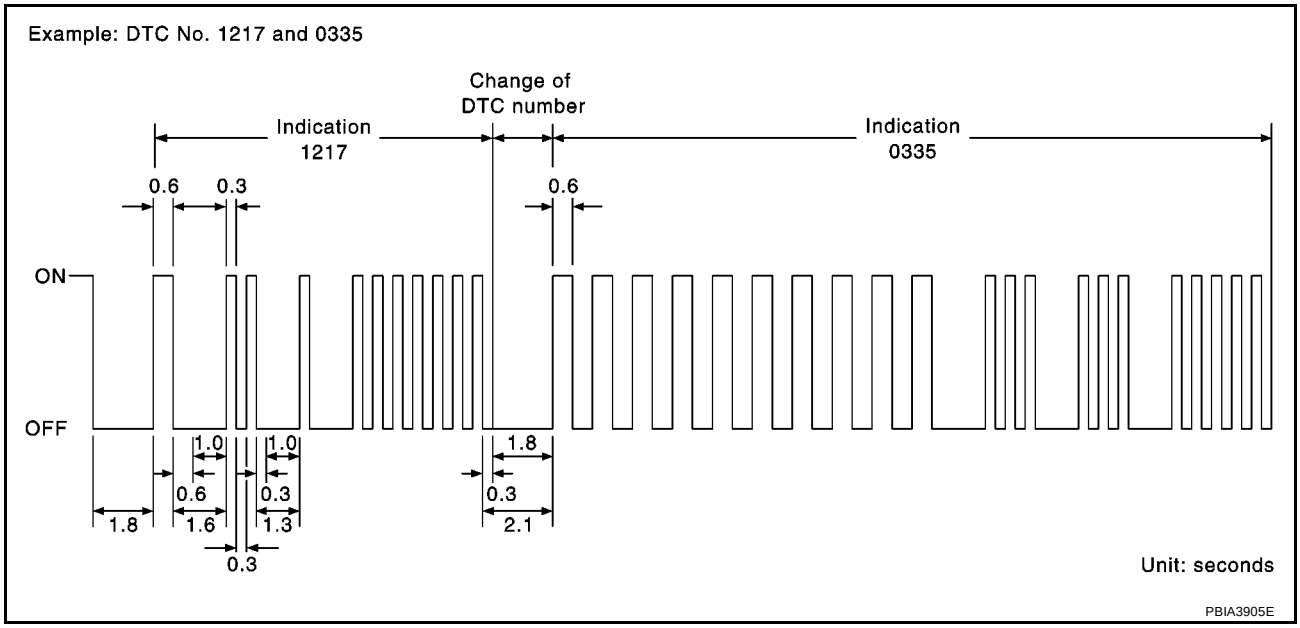

A particular trouble code can be identified by the number of four-digit numeral flashes. The “zero” is indicated by the number of ten flashes. The length of time the 1,000th-digit numeral flashes on and off is 1.2 seconds consisting of an ON (0.6-second) - OFF (0.6-second) cycle.
The 100th-digit numeral and lower digit numerals consist of a 0.3-second ON and 0.3-second OFF cycle.
A change from one digit numeral to another occurs at an interval of 1.0-second OFF. In other words, the later numeral appears on the display 1.3 seconds after the former numeral has disappeared.
A change from one trouble code to another occurs at an interval of 1.8-second OFF.
In this way, all the detected malfunctions are classified by their DTC numbers. The DTC 0000 refers to no malfunction. (See EC-22, "INDEX FOR DTC")

How to Erase Diagnostic Test Mode II (Self-diagnostic Results)

The DTC can be erased from the back up memory in the ECM by depressing accelerator pedal. Refer to EC-59, "HOW TO SWITCH DIAGNOSTIC TEST MODE" .

- **If the battery is disconnected, the DTC will be lost from the backup memory within 24 hours.**
- **Be careful not to erase the stored memory before starting trouble diagnoses.**

DIAGNOSTIC TEST MODE II — HEATED OXYGEN SENSOR 1 MONITOR

In this mode, the MI displays the condition of the fuel mixture (lean or rich) which is monitored by the heated oxygen sensor 1.

MI	Fuel mixture condition in the exhaust gas	Air-fuel ratio feedback control condition
ON	Lean	Closed loop system
OFF	Rich	
*Remains ON or OFF	Any condition	Open loop system

*: Maintains conditions just before switching to open loop.

To check the heated oxygen sensor 1 function, start engine in the Diagnostic Test Mode II and warm it up until engine coolant temperature indicator points to the middle of the gauge.
Next run engine at about 2,000 rpm for about 2 minutes under no load conditions. Then make sure that the MI comes ON more than 5 times within 10 seconds with engine running at 2,000 rpm under no load.

OBD System Operation Chart

BBS002U0

RELATIONSHIP BETWEEN MI, 1ST TRIP DTC, DTC, AND DETECTABLE ITEMS

- When a malfunction is detected for the first time, the 1st trip DTC and the 1st trip freeze frame data are stored in the ECM memory.
- When the same malfunction is detected in two consecutive trips, the DTC and the freeze frame data are stored in the ECM memory, and the MI will come on. For details, refer to EC-47, "Two Trip Detection Logic" .
- The MI will go off after the vehicle is driven 3 times (driving pattern B) with no malfunction. The drive is counted only when the recorded driving pattern is met (as stored in the ECM). If another malfunction occurs while counting, the counter will reset.
- The DTC and the freeze frame data will be stored until the vehicle is driven 40 times (driving pattern A) without the same malfunction recurring (except for Misfire and Fuel Injection System). For Misfire and Fuel Injection System, the DTC and freeze frame data will be stored until the vehicle is driven 80 times (driving pattern C) without the same malfunction recurring. The “TIME” in “SELF-DIAGNOSTIC RESULTS” mode of CONSULT-II will count the number of times the vehicle is driven.
- The 1st trip DTC is not displayed when the self-diagnosis results in OK for the 2nd trip.

SUMMARY CHART

Items	Fuel Injection System	Misfire	Other
MI (goes off)	3 (pattern B)	3 (pattern B)	3 (pattern B)
DTC, Freeze Frame Data (no display)	80 (pattern C)	80 (pattern C)	40 (pattern A)
1st Trip DTC (clear)	1 (pattern C), *1	1 (pattern C), *1	1 (pattern B)
1st Trip Freeze Frame Data (clear)	*1 , *2	*1 , *2	1 (pattern B)

For details about patterns “B” and “C” under “Fuel Injection System” and “Misfire”, see EC-63 .
For details about patterns “A” and “B” under “Other”, see EC-65 .
*1: Clear timing is at the moment OK is detected.
*2: Clear timing is when the same malfunction is detected in the 2nd trip.

RELATIONSHIP BETWEEN MI, DTC, 1ST TRIP DTC AND DRIVING PATTERNS FOR “MISFIRE” <EXHAUST QUALITY DETERIORATION>, “FUEL INJECTION SYSTEM”

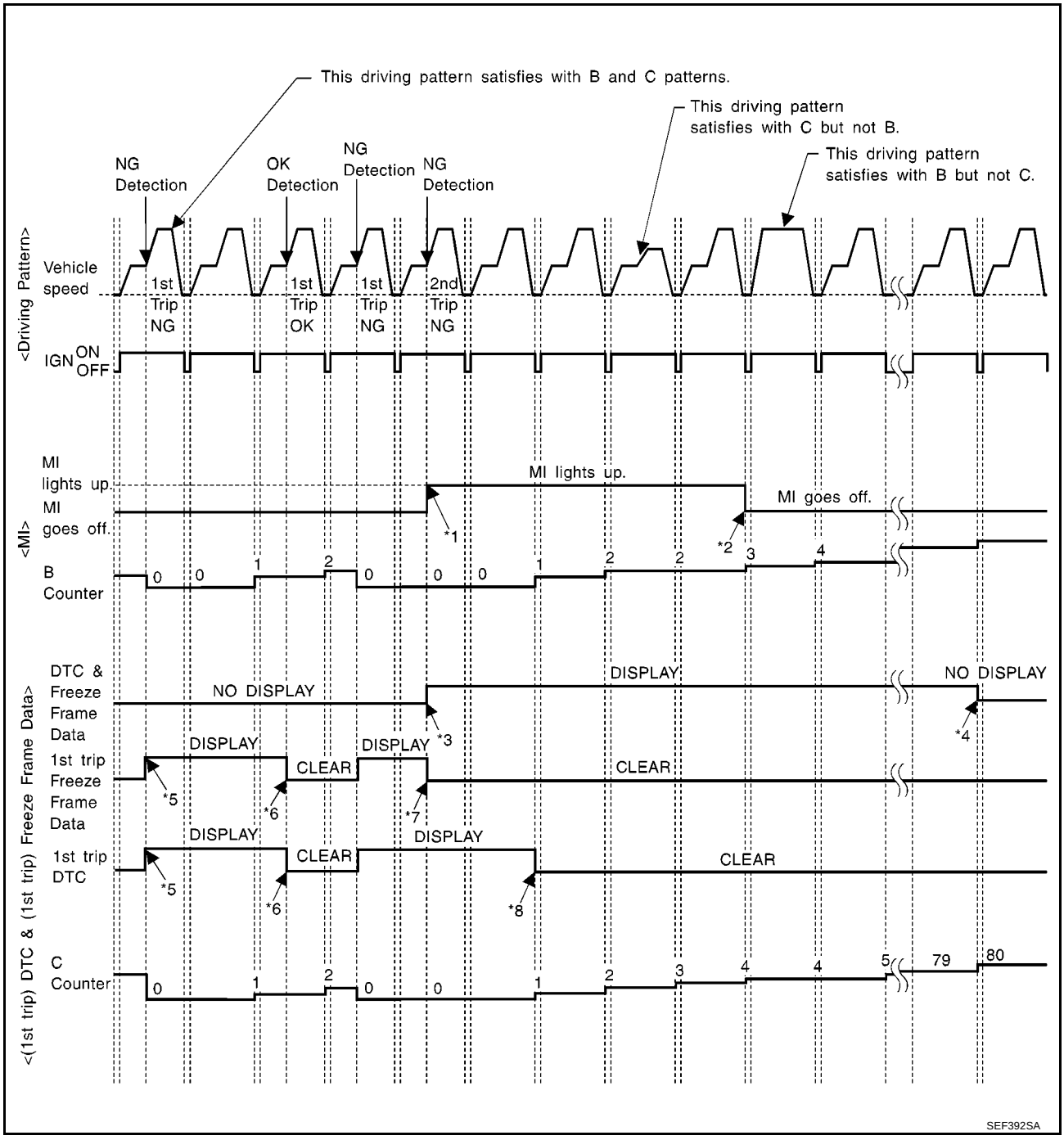

*1: When the same malfunction is detected in two consecutive trips, MI will light up.

*2: MI will go off after vehicle is driven 3 times (pattern B) without any malfunctions.

*3: When the same malfunction is detected in two consecutive trips, the DTC and the freeze frame data will be stored in ECM.

*4: The DTC and the freeze frame data will not be displayed any longer after vehicle is driven 80 times (pattern C) without the same malfunction. (The DTC and the freeze frame data still remain in ECM.)

*5: When a malfunction is detected for the first time, the 1st trip DTC and the 1st trip freeze frame data will be stored in ECM.

*6: The 1st trip DTC and the 1st trip freeze frame data will be cleared at the moment OK is detected.

*7: When the same malfunction is detected in the 2nd trip, the 1st trip freeze frame data will be cleared.

*8: 1st trip DTC will be cleared when vehicle is driven once (pattern C) without the same malfunction after DTC is stored in ECM.

EXPLANATION FOR DRIVING PATTERNS FOR “MISFIRE <EXHAUST QUALITY DETERIORATION>”, “FUEL INJECTION SYSTEM”

<Driving Pattern B>

Driving pattern B means the vehicle operation as follows:
All components and systems should be monitored at least once by the OBD system.

- The B counter will be cleared when the malfunction is detected once regardless of the driving pattern.
- The B counter will be counted up when driving pattern B is satisfied without any malfunction.
- The MI will go off when the B counter reaches 3. (*2 in OBD SYSTEM OPERATION CHART)

<Driving Pattern C>

Driving pattern C means the vehicle operation as follows:

1. The following conditions should be satisfied at the same time:
   Engine speed: (Engine speed in the freeze frame data) ±375 rpm
   Calculated load value: (Calculated load value in the freeze frame data) x (1±0.1) [%]
   Engine coolant temperature (T) condition:

- When the freeze frame data shows lower than 70°C (158°F), T should be lower than 70°C (158°F).
- When the freeze frame data shows higher than or equal to 70°C (158°F), T should be higher than or equal to 70°C (158°F).

Example:
If the stored freeze frame data is as follows:
Engine speed: 850 rpm, Calculated load value: 30%, Engine coolant temperature: 80°C (176°F)
To be satisfied with driving pattern C, the vehicle should run under the following conditions:
Engine speed: 475 - 1,225 rpm, Calculated load value: 27 - 33%, Engine coolant temperature: more than 70°C (158°F)

- The C counter will be cleared when the malfunction is detected regardless of vehicle conditions above.
- The C counter will be counted up when vehicle conditions above is satisfied without the same malfunction.
- The DTC will not be displayed after C counter reaches 80.
- The 1st trip DTC will be cleared when C counter is counted once without the same malfunction after DTC is stored in ECM.

RELATIONSHIP BETWEEN MI, DTC, 1ST TRIP DTC AND DRIVING PATTERNS EXCEPT FOR "MISFIRE <EXHAUST QUALITY DETERIORATION>", "FUEL INJECTION SYSTEM"

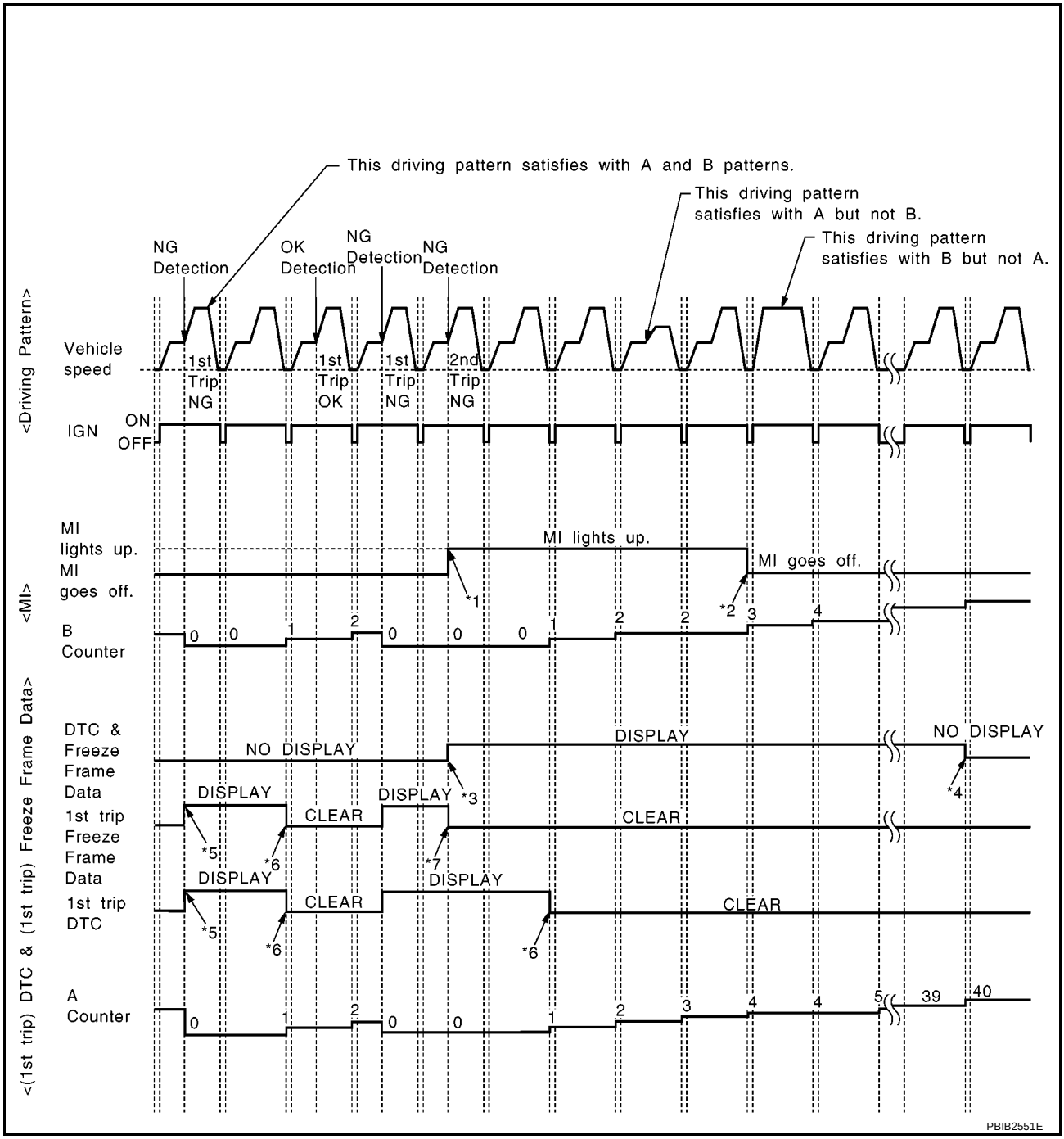

*1: When the same malfunction is detected in two consecutive trips, MI will light up.

*2: MI will go off after vehicle is driven 3 times (pattern B) without any malfunctions.

*3: When the same malfunction is detected in two consecutive trips, the DTC and the freeze frame data will be stored in ECM.

*4: The DTC and the freeze frame data will not be displayed any longer after vehicle is driven 40 times (pattern A) without the same malfunction. (The DTC and the freeze frame data still remain in ECM.)

*5: When a malfunction is detected for the first time, the 1st trip DTC and the 1st trip freeze frame data will be stored in ECM.

*6: 1st trip DTC will be cleared after vehicle is driven once (pattern B) without the same malfunction.

*7: When the same malfunction is detected in the 2nd trip, the 1st trip freeze frame data will be cleared.

EXPLANATION FOR DRIVING PATTERNS EXCEPT FOR “MISFIRE <EXHAUST QUALITY DETERIORATION>”, “FUEL INJECTION SYSTEM”

<Driving Pattern A>

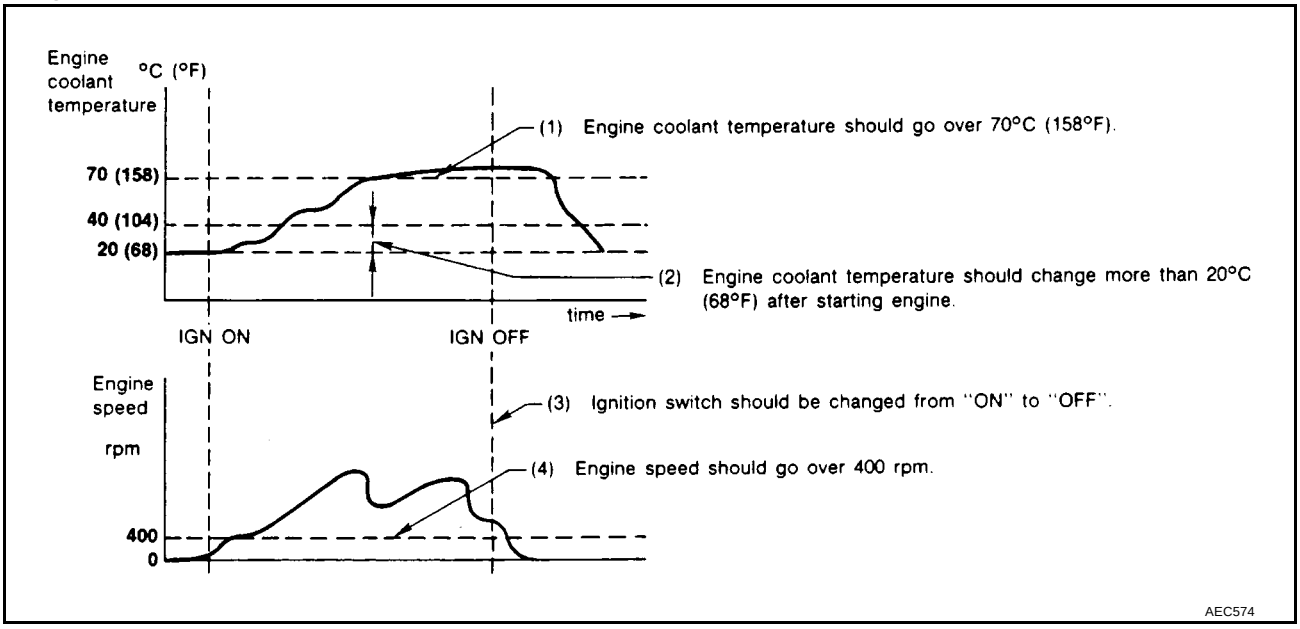

- The A counter will be cleared when the malfunction is detected regardless of (1) - (4).
- The A counter will be counted up when (1) - (4) are satisfied without the same malfunction.
- The DTC will not be displayed after the A counter reaches 40.

<Driving Pattern B>

Driving pattern B means the vehicle operation as follows:
All components and systems should be monitored at least once by the OBD system.

- The B counter will be cleared when the malfunction is detected once regardless of the driving pattern.
- The B counter will be counted up when driving pattern B is satisfied without any malfunctions.
- The MI will go off when the B counter reaches 3 (*2 in OBD SYSTEM OPERATION CHART).

BASIC SERVICE PROCEDURE

PFP:00018

Basic Inspection

BBS002U4

1. INSPECTION START

1. Check service records for any recent repairs that may indicate a related malfunction, or a current need for scheduled maintenance.
2. Open engine hood and check the following:
- Harness connectors for improper connections
- Wiring harness for improper connections, pinches and cut
- Vacuum hoses for splits, kinks and improper connections
- Hoses and ducts for leaks
- Air cleaner clogging
- Gasket
3. Confirm that electrical or mechanical loads are not applied.
- Headlamp switch is OFF.
- Air conditioner switch is OFF.
- Rear window defogger switch is OFF.
- Steering wheel is in the straight-ahead position, etc.

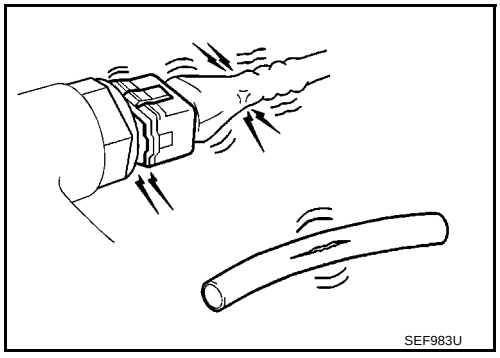

4. Start engine and warm it up until engine coolant temperature indicator points the middle of gauge.
   Ensure engine stays below 1,000 rpm.

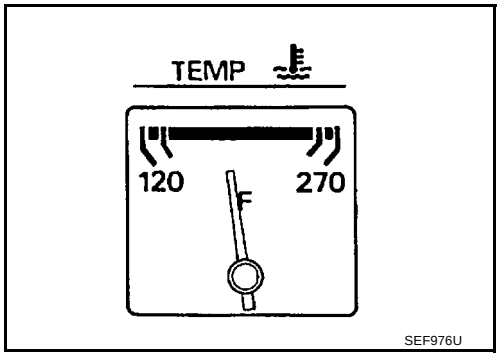

5. Run engine at about 2,000 rpm for about 2 minutes under no load.
6. Make sure that no DTC is displayed with CONSULT-II or GST.

OK or NG

OK >> GO TO 3.
NG >> GO TO 2.

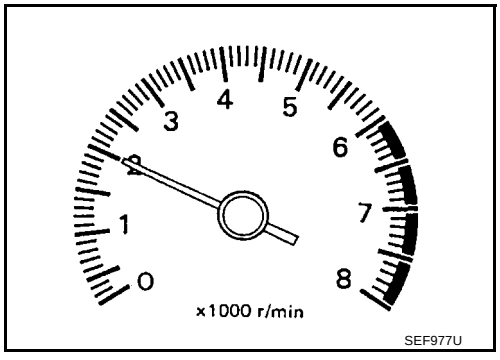

2. REPAIR OR REPLACE

Repair or replace components as necessary according to corresponding Diagnostic Procedure.

>> GO TO 3

3. CHECK TARGET IDLE SPEED

With CONSULT-II

1. Run engine at about 2,000 rpm for about 2 minutes under no load.
2. Rev engine (2,000 to 3,000 rpm) two or three times under no load, then run engine at idle speed for about 1 minute.

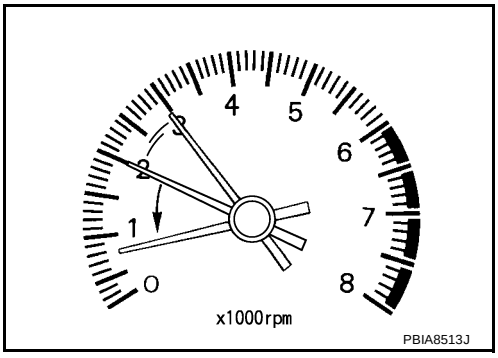

3. Read idle speed in “DATA MONITOR” mode with CONSULT-II. Refer to EC-69, "IDLE SPEED" .

   650 ± 50 rpm (in Neutral position)

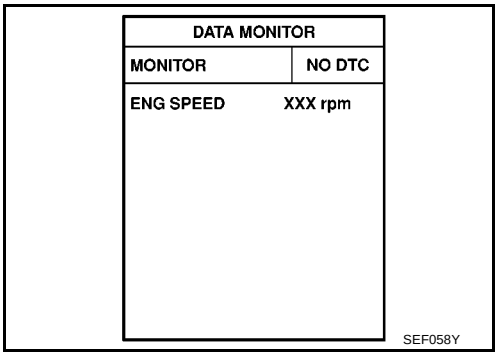

Without CONSULT-II

1. Run engine at about 2,000 rpm for about 2 minutes under no load.
2. Rev engine (2,000 to 3,000 rpm) two or three times under no load, then run engine at idle speed for about 1 minute.
3. Check idle speed. Refer to EC-69, "IDLE SPEED" .

   650 ± 50 rpm (in Neutral position)

OK or NG

OK >> **INSPECTION END**
NG >> GO TO 4.

4. PERFORM ACCELERATOR PEDAL RELEASED POSITION LEARNING

1. Stop engine.
2. Perform EC-69, "Accelerator Pedal Released Position Learning" .

>> GO TO 5.

5. PERFORM THROTTLE VALVE CLOSED POSITION LEARNING

Perform EC-69, "Throttle Valve Closed Position Learning" .

>> GO TO 6.

6. PERFORM IDLE AIR VOLUME LEARNING

Refer to EC-69, "Idle Air Volume Learning" .
Is Idle Air Volume Learning carried out successfully?

Yes or No

Yes >> GO TO 7.
No >> 1. Follow the instruction of Idle Air Volume Learning.
2. GO TO 4.

7. CHECK TARGET IDLE SPEED AGAIN

With CONSULT-II

1. Start engine and warm it up to normal operating temperature.
2. Read idle speed in “DATA MONITOR” mode with CONSULT-II.
Refer to EC-69, "IDLE SPEED" .

650 ± 50 rpm (in Neutral position)

Without CONSULT-II

1. Start engine and warm it up to normal operating temperature.
2. Check idle speed. Refer to EC-69, "IDLE SPEED" .

650 ± 50 rpm (in Neutral position)

OK or NG

OK >> **INSPECTION END**
NG >> GO TO 8.

8. DETECT MALFUNCTIONING PART

Check the following.

- Check camshaft position sensor (PHASE) and circuit. Refer to EC-257 .
- Check crankshaft position sensor (POS) and circuit. Refer to EC-250 .

OK or NG

OK >> GO TO 9.
NG >> 1. Repair or replace.
2. GO TO 4.

9. CHECK ECM FUNCTION

1. Substitute another known-good ECM to check ECM function. (ECM may be the cause of an incident, but this is a rare case.)
2. Perform initialization of NATS system and registration of all NATS ignition key IDs. Refer to BL-218, "ECM Re-communicating Function" .

>> GO TO 4.

Idle Speed Check

BBS002TQ

IDLE SPEED

With CONSULT-II

Check idle speed in “DATA MONITOR” mode with CONSULT-II.

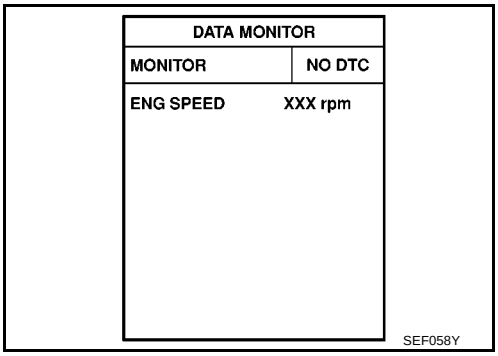

With GST

Check idle speed with GST.

Accelerator Pedal Released Position Learning

BBS002TR

DESCRIPTION

Accelerator Pedal Released Position Learning is an operation to learn the fully released position of the accelerator pedal by monitoring the accelerator pedal position sensor output signal. It must be performed each time harness connector of accelerator pedal position sensor or ECM is disconnected.

OPERATION PROCEDURE

1. Make sure that accelerator pedal is fully released.
2. Turn ignition switch ON and wait at least 2 seconds.
3. Turn ignition switch OFF and wait at least 10 seconds.
4. Turn ignition switch ON and wait at least 2 seconds.
5. Turn ignition switch OFF and wait at least 10 seconds.

Throttle Valve Closed Position Learning

BBS002TS

DESCRIPTION

Throttle Valve Closed Position Learning is an operation to learn the fully closed position of the throttle valve by monitoring the throttle position sensor output signal. It must be performed each time harness connector of electric throttle control actuator or ECM is disconnected.

OPERATION PROCEDURE

1. Make sure that accelerator pedal is fully released.
2. Turn ignition switch ON.
3. Turn ignition switch OFF and wait at least 10 seconds.
   Make sure that throttle valve moves during above 10 seconds by confirming the operating sound.

Idle Air Volume Learning

BBS002TT

DESCRIPTION

Idle Air Volume Learning is an operation to learn the idle air volume that keeps each engine within the specific range. It must be performed under any of the following conditions:

- Each time electric throttle control actuator or ECM is replaced.
- Idle speed is out of specification.

PREPARATION

Before performing Idle Air Volume Learning, make sure that all of the following conditions are satisfied.
Learning will be cancelled if any of the following conditions are missed for even a moment.

- Battery voltage: More than 12.9V (At idle)
- Engine coolant temperature: 70 - 100°C (158 - 212°F)
- PNP switch: ON
- Electric load switch: OFF
  (Air conditioner, headlamp, rear window defogger)

On vehicles equipped with daytime light systems, set lighting switch to the 1st position to light only small lamps.

- Steering wheel: Neutral (Straight-ahead position)
- Vehicle speed: Stopped
- Transmission: Warmed-up

– Drive vehicle for 10 minutes.

OPERATION PROCEDURE

With CONSULT-II

1. Perform EC-69, "Accelerator Pedal Released Position Learning" .
2. Perform EC-69, "Throttle Valve Closed Position Learning" .
3. Start engine and warm it up to normal operating temperature.
4. Check that all items listed under the topic PREPARATION (previously mentioned) are in good order.
5. Select “IDLE AIR VOL LEARN” in “WORK SUPPORT” mode.

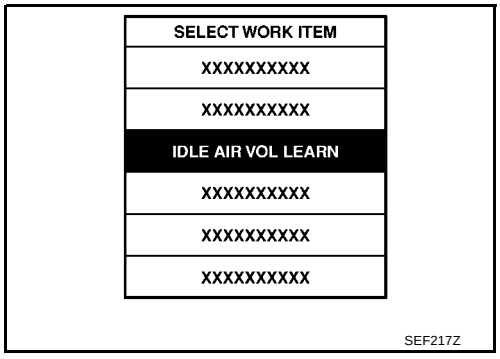

6. Touch “START” and wait 20 seconds.

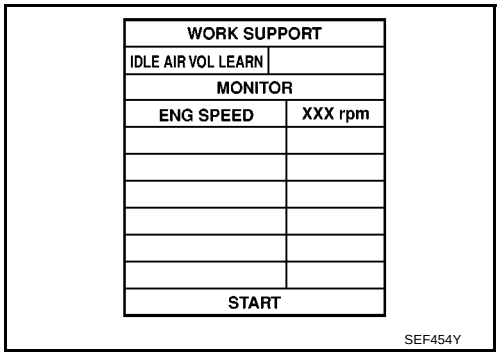

7. Make sure that “CMPLT” is displayed on CONSULT-II screen. If “CMPLT” is not displayed, Idle Air Volume Learning will not be carried out successfully. In this case, find the cause of the incident by referring to the Diagnostic Procedure below.
8. Rev up the engine two or three times and make sure that idle speed is within the specification.

ITEM	SPECIFICATION
Idle speed	650 ± 50 rpm (in Neutral position)

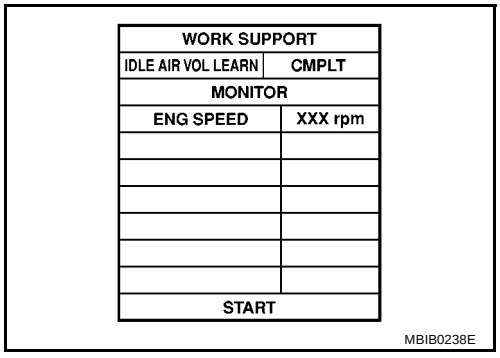

Without CONSULT-II

NOTE:

- **It is better to count the time accurately with a clock.**
- **It is impossible to switch the diagnostic mode when an accelerator pedal position sensor circuit has a malfunction.**

1. Perform EC-69, "Accelerator Pedal Released Position Learning" .
2. Perform EC-69, "Throttle Valve Closed Position Learning" .

3. Start engine and warm it up to normal operating temperature.
4. Check that all items listed under the topic PREPARATION (previously mentioned) are in good order.
5. Turn ignition switch OFF and wait at least 10 seconds.
6. Confirm that accelerator pedal is fully released, turn ignition switch ON and wait 3 seconds.
7. Repeat the following procedure quickly five times within 5 seconds.
a. Fully depress the accelerator pedal.
b. Fully release the accelerator pedal.
8. Wait 7 seconds, fully depress the accelerator pedal and keep it for approx. 20 seconds until the MI stops blinking and turned ON.
9. Fully release the accelerator pedal within 3 seconds after the MI turned ON.
10. Start engine and let it idle.
11. Wait 20 seconds.

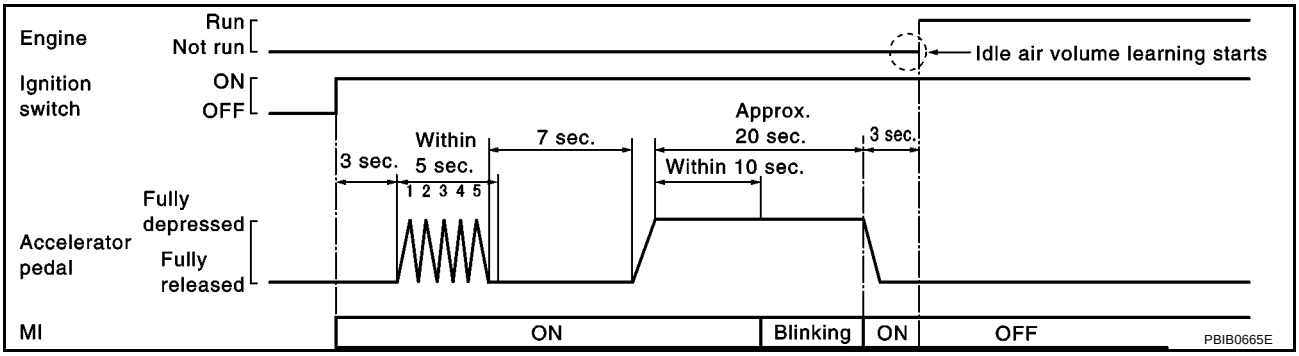

12. Rev up the engine two or three times and make sure that idle speed is within the specification.

ITEM	SPECIFICATION
Idle speed	650 ± 50 rpm (in Neutral position)

13. If idle speed is not within the specification, Idle Air Volume Learning will not be carried out successfully. In this case, find the cause of the incident by referring to the Diagnostic Procedure below.

DIAGNOSTIC PROCEDURE

If idle air volume learning cannot be performed successfully, proceed as follows:

1. **Check that throttle valve is fully closed.**
2. **Check PCV valve operation.**
3. **Check that downstream of throttle valve is free from air leakage.**
4. **When the above three items check out OK, engine component parts and their installation condition are questionable. Check and eliminate the cause of the incident.**
   It is useful to perform **EC-117, "TROUBLE DIAGNOSIS - SPECIFICATION VALUE"** **.**
5. **If any of the following conditions occur after the engine has started, eliminate the cause of the incident and perform Idle Air Volume Learning all over again:**
   - **Engine stalls.**
   - **Erroneous idle.**

Fuel Pressure Check

BBS002TU

FUEL PRESSURE RELEASE

With CONSULT-II

1. Turn ignition switch ON.

2. Perform “FUEL PRESSURE RELEASE” in “WORK SUPPORT” mode with CONSULT-II.
3. Start engine.
4. After engine stalls, crank it 2 or 3 times to release all fuel pressure.
5. Turn ignition switch OFF.

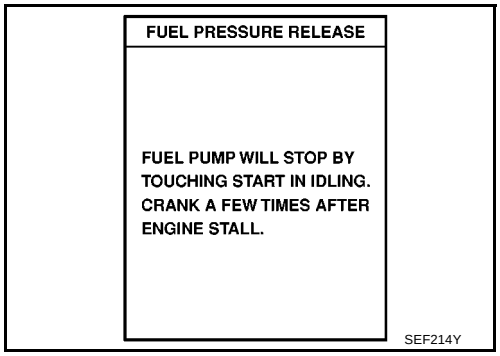

Without CONSULT-II

1. Remove fuel pump fuse located in IPDM E/R.
2. Start engine.
3. After engine stalls, crank it 2 or 3 times to release all fuel pressure.
4. Turn ignition switch OFF.
5. Reinstall fuel pump fuse after servicing fuel system.

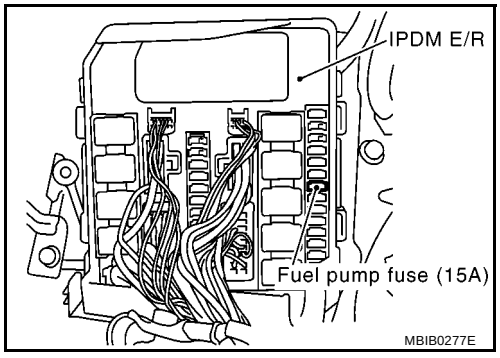

FUEL PRESSURE CHECK

CAUTION:

- **Before disconnecting fuel line, release fuel pressure from fuel line to eliminate danger.**
- **The fuel hose connection method used when taking fuel pressure check must not be used for other purposes.**
- **Be careful not to scratch or put debris around connection area when servicing, so that the quick connector maintains sealability with O-rings inside.**
- **When installing fuel hose quick connector, refer to EM-18, "AIR CLEANER AND AIR DUCT" .**

NOTE:

Prepare pans or saucers under the disconnected fuel line because the fuel may spill out. The fuel pressure cannot be completely released because E11 models do not have fuel return system.

1. Release fuel pressure to zero. Refer to EC-71, "FUEL PRESSURE RELEASE" .
2. Prepare fuel hose and fuel hose clamp for fuel pressure check, and connect fuel pressure gauge.
   - Use suitable fuel hose for fuel pressure check (genuine NISSAN fuel hose without quick connector).
   - To avoid unnecessary force or tension to hose, use moderately long fuel hose for fuel pressure check.
   - Do not use the fuel hose for checking fuel pressure with damage or cracks on it.
   - Use Pressure Gauge to check fuel pressure.
3. Remove fuel hose. Refer to EM-18, "AIR CLEANER AND AIR DUCT" .
   - Do not twist or kink fuel hose because it is plastic hose.
   - Do not remove fuel hose from quick connector.
   - Keep the original fuel hose to be free from intrusion of dust or foreign substances with a suitable cover.

4. Install the fuel pressure gauge as shown in the figure.
   - Wipe off oil or dirt from hose insertion part using cloth moistened with gasoline.
   - Apply proper amount of gasoline between top of the fuel tube and No.1 spool.
   - Insert fuel hose for fuel pressure check until it touches the No.1 spool on fuel tube.
   - Use NISSAN genuine hose clamp (part number: 16439 N4710 or 16439 40U00).
   - When reconnecting fuel line, always use new clamps.
   - When reconnecting fuel hose, check the original fuel hose for damage and abnormality.
   - Use a torque driver to tighten clamps.
   - Install hose clamp to the position within 1 - 2 mm (0.04 - 0.08 in).
   - A: Fuel pressure gauge

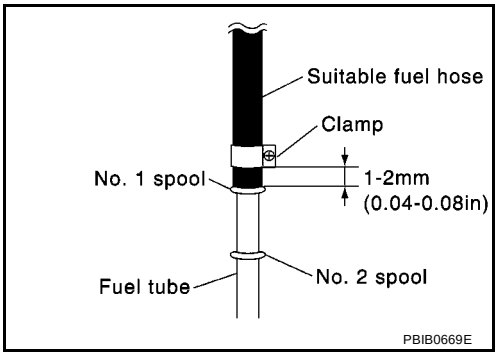

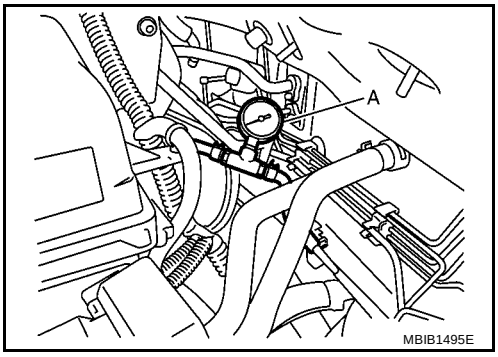

Tightening torque: 1 - 1.5 N·m (0.1 - 0.15 kg-m, 9 - 13 in-lb)

   - Make sure that clamp screw does not contact adjacent parts.
5. After connecting fuel hose for fuel pressure check, pull the hose with a force of approximately 98 N (10 kg, 22 lb) to confirm fuel tube does not come off.
6. Turn ignition switch ON, and check for fuel leakage.
7. Start engine and check for fuel leakage.
8. Read the indication of fuel pressure gauge.
   - Do not perform fuel pressure check with system operating. Fuel pressure gauge may indicate false readings.
   - During fuel pressure check, confirm for fuel leakage from fuel connection every 3 minutes.

At idling: Approximately 350 kPa (3.5 bar, 3.57 kg/cm^2 , 51 psi)

9. If result is unsatisfactory, go to next step.
10. Check the following.
    - Fuel hoses and fuel tubes for clogging
    - Fuel filter for clogging
    - Fuel pump
    - Fuel pressure regulator for clogging

    If OK, replace fuel pressure regulator.
    If NG, repair or replace.

TROUBLE DIAGNOSIS

PFP:00004

Trouble Diagnosis Introduction

BBS002U1

INTRODUCTION

The engine has an ECM to control major systems such as fuel control, ignition control, idle air control system, etc. The ECM accepts input signals from sensors and instantly drives actuators. It is essential that both input and output signals are proper and stable. At the same time, it is important that there are no malfunctions such as vacuum leaks, fouled spark plugs, or other malfunctions with the engine.

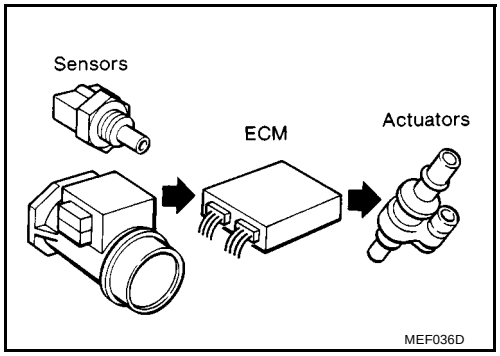

It is much more difficult to diagnose an incident that occurs intermittently rather than continuously. Most intermittent incidents are caused by poor electric connections or improper wiring. In this case, careful checking of suspected circuits may help prevent the replacement of good parts.

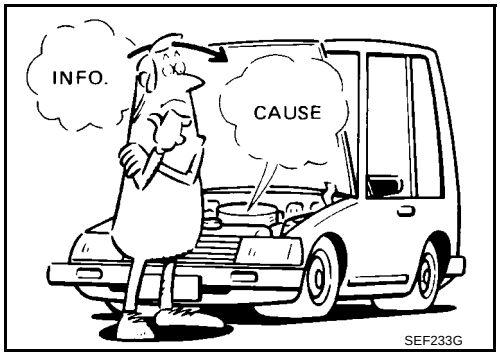

A visual check only may not find the cause of the incidents. A road test with CONSULT-II (or GST) or a circuit tester connected should be performed. Follow the Work Flow on EC-75 .

Before undertaking actual checks, take a few minutes to talk with a customer who approaches with a driveability complaint. The customer can supply good information about such incidents, especially intermittent ones. Find out what symptoms are present and under what conditions they occur. A Diagnostic Worksheet like the example on EC-79 should be used.

Start your diagnosis by looking for conventional malfunctions first. This will help troubleshoot driveability malfunctions on an electronically controlled engine vehicle.

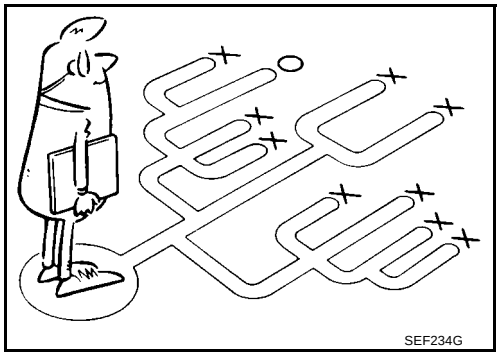

WORK FLOW
Overall Sequence

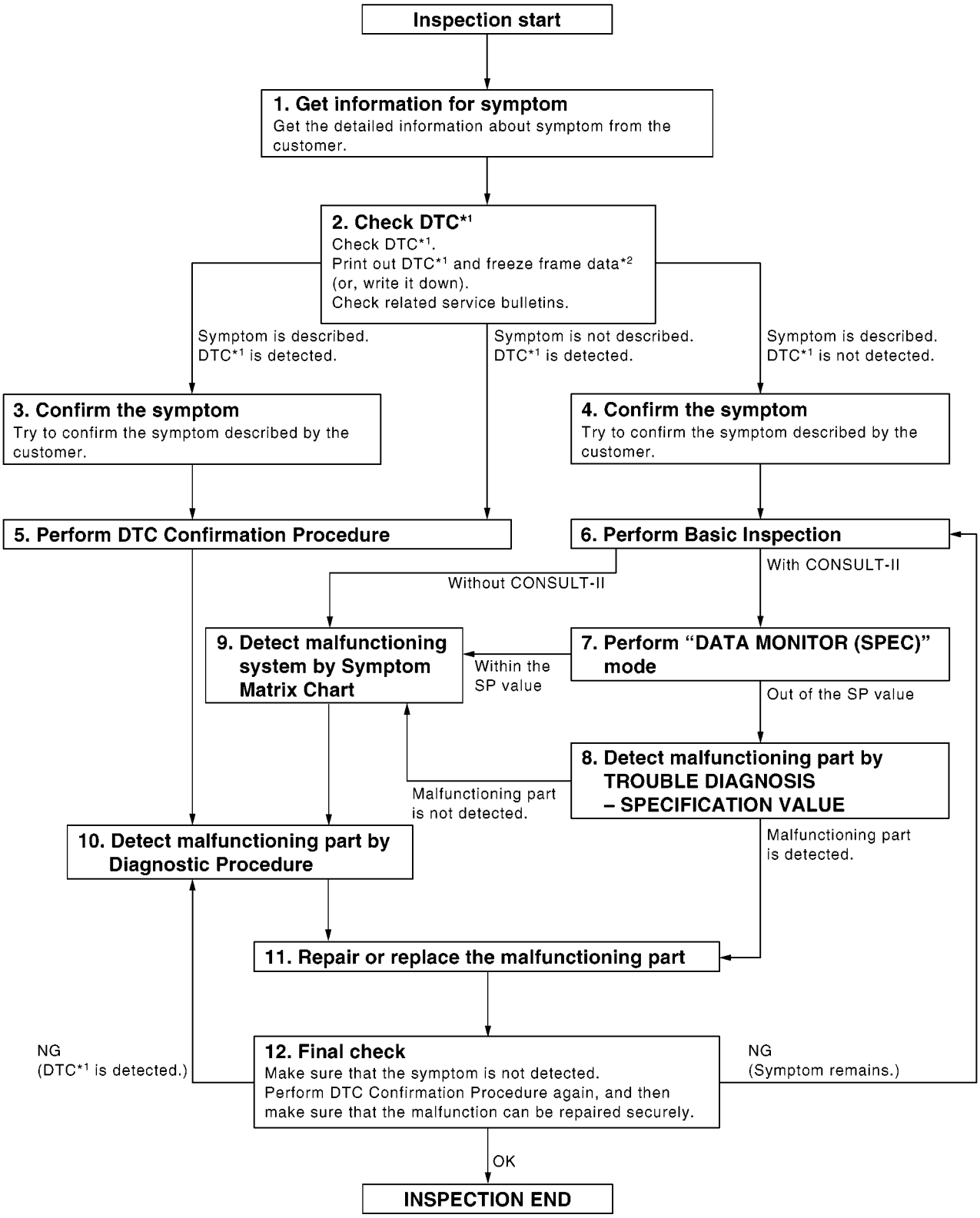

*1: Include 1st trip DTC.
*2: Include 1st trip freeze frame data.

PBIB2267E

Detailed Flow

1. GET INFORMATION FOR SYMPTOM

Get the detailed information from the customer about the symptom (the condition and the environment when the incident/malfunction occurred) using the EC-78, "DIAGNOSTIC WORKSHEET" .

>> GO TO 2.

2. CHECK DTC*1

1. Check DTC*1 .
2. Perform the following procedure if DTC*1 is displayed.

- Record DTC*1 and freeze frame data*2 . (Print them out with CONSULT-II or GST.)
- Erase DTC*1 . (Refer to EC-57, "HOW TO ERASE EMISSION-RELATED DIAGNOSTIC INFORMATION" .)
- Study the relationship between the cause detected by DTC*1 and the symptom described by the customer. (Symptom Matrix Chart is useful. Refer to EC-82, "Symptom Matrix Chart" .)

3. Check related service bulletins for information.

Is any symptom described and any DTC detected?

Symptom is described, DTC*1 is displayed>>GO TO 3.
Symptom is described, DTC*1 is not displayed>>GO TO 4.
Symptom is not described, DTC*1 is displayed>>GO TO 5.

3. CONFIRM THE SYMPTOM

Try to confirm the symptom described by the customer (except MI ON).
DIAGNOSIS WORK SHEET is useful to verify the incident.
Connect CONSULT-II to the vehicle in “DATA MONITOR (AUTO TRIG)” mode and check real time diagnosis results.
Verify relation between the symptom and the condition when the symptom is detected.

>> GO TO 5.

4. CONFIRM THE SYMPTOM

Try to confirm the symptom described by the customer.
DIAGNOSIS WORK SHEET is useful to verify the incident.
Connect CONSULT-II to the vehicle in “DATA MONITOR (AUTO TRIG)” mode and check real time diagnosis results.
Verify relation between the symptom and the condition when the symptom is detected.

>> GO TO 6.

5. PERFORM DTC CONFIRMATION PROCEDURE

Perform DTC Confirmation Procedure for the displayed DTC*1 , and then make sure that DTC*1 is detected again.
At this time, always connect CONSULT-II to the vehicle, and check diagnostic results in real time on “DATA MONITOR (AUTO TRIG)”.

If two or more DTCs*1 are detected, refer to EC-80, "DTC Inspection Priority Chart" and determine trouble diagnosis order.

NOTE:

- Freeze frame data*2 is useful if the DTC*1 is not detected.
- Perform Overall Function Check if DTC Confirmation Procedure is not included on Service Manual. This simplified check procedure is an effective alternative though DTC*1 cannot be detected during this check. If the result of Overall Function Check is NG, it is the same as the detection of DTC*1 by DTC Confirmation Procedure.

Is DTC*1 detected?

Yes >> GO TO 10.
No >> Check according to EC-127, "TROUBLE DIAGNOSIS FOR INTERMITTENT INCIDENT" .

6. PERFORM BASIC INSPECTION

Perform EC-66, "Basic Inspection" .

With CONSULT-II>>GO TO 7.
Without CONSULT-II>>GO TO 9.

7. PERFORM DATA MONITOR (SPEC) MODE

With CONSULT-II
Make sure that “B/FUEL SCHDL”, and “A/F ALPHA-B1” are within the SP value using CONSULT-II “DATA MONITOR (SPEC)” mode. Refer to EC-118, "Diagnostic Procedure" .

Are they within the SP value?

Yes >> GO TO 9.
No >> GO TO 8.

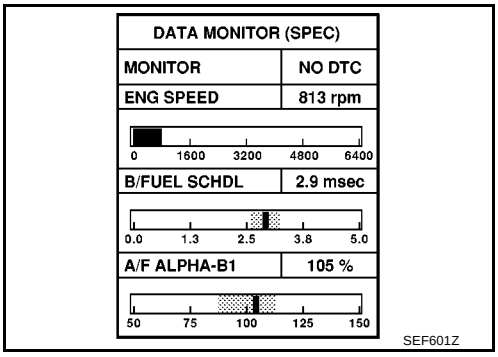

8. DETECT MALFUNCTIONING PART BY TROUBLE DIAGNOSIS - SPECIFICATION VALUE

Detect malfunctioning part according to EC-117, "TROUBLE DIAGNOSIS - SPECIFICATION VALUE" .

Is malfunctioning part detected?

Yes >> GO TO 11.
No >> GO TO 9.

9. DETECT MALFUNCTIONING SYSTEM BY SYMPTOM MATRIX CHART

Detect malfunctioning system according to EC-82, "Symptom Matrix Chart" based on the confirmed symptom in step 4, and determine the trouble diagnosis order based on possible causes and symptom.

>> GO TO 10.

10. DETECT MALFUNCTIONING PART BY DIAGNOSTIC PROCEDURE

Inspect according to Diagnostic Procedure of the system.

NOTE:
The Diagnostic Procedure in EC section described based on open circuit inspection. A short circuit inspection is also required for the circuit check in the Diagnostic Procedure. For details, refer to Circuit Inspection in GI-25, "How to Perform Efficient Diagnosis for an Electrical Incident" .

Is malfunctioning part detected?

Yes >> GO TO 11.
No >> Monitor input data from related sensors or check voltage of related ECM terminals using CONSULT-II. Refer to EC-95, "ECM Terminals and Reference Value" , EC-112, "CONSULT-II Reference Value in Data Monitor Mode" .

11. REPAIR OR REPLACE THE MALFUNCTIONING PART

1. Repair or replace the malfunctioning part.
2. Reconnect parts or connectors disconnected during Diagnostic Procedure again after repair and replacement.
3. Check DTC. If DTC is displayed, erase it, refer to EC-57, "HOW TO ERASE EMISSION-RELATED DIAGNOSTIC INFORMATION" .

>> GO TO 12.

12. FINAL CHECK

When DTC was detected in step 2, perform DTC Confirmation Procedure or Overall Function Check again, and then make sure that the malfunction have been repaired securely.
When symptom was described from the customer, refer to confirmed symptom in step 3 or 4, and make sure that the symptom is not detected.

OK or NG

NG (DTC*1 is detected)>>GO TO 10.
NG (Symptom remains)>>GO TO 6.
OK >> 1. Before returning the vehicle to the customer, make sure to erase unnecessary DTC*1 in ECM. (Refer to EC-57, "HOW TO ERASE EMISSION-RELATED DIAGNOSTIC INFORMATION" .)
2. If the completion of SRT is needed, drive vehicle under the specific driving pattern. Refer to EC-55, "Driving Pattern" .
3. **INSPECTION END**

*1: Include 1st trip DTC.
*2: Include 1st trip freeze frame data.

DIAGNOSTIC WORKSHEET

Description

There are many operating conditions that lead to the malfunction of engine components. A good grasp of such conditions can make troubleshooting faster and more accurate.
In general, each customer feels differently about a incident. It is important to fully understand the symptoms or conditions for a customer complaint.
Utilize a diagnostic worksheet like the one on the next page in order to organize all the information for troubleshooting.
Some conditions may cause the MI to come on steady or blink and DTC to be detected. Examples:

- Vehicle ran out of fuel, which caused the engine to misfire.

KEY POINTS

WHAT ..... Vehicle & engine model
WHEN ..... Date, Frequencies
WHERE..... Road conditions
HOW ..... Operating conditions, Weather conditions, Symptoms

SEF907L

Worksheet Sample

Customer name MR/MS		Model & Year	VIN
Engine #		Trans.	Mileage
Incident Date		Manuf. Date	In Service Date
Fuel and fuel filler cap		☐ Vehicle ran out of fuel causing misfire ☐ Fuel filler cap was left off or incorrectly screwed on.	
Symptoms	☐ Startability	☐ Impossible to start ☐ No combustion ☐ Partial combustion ☐ Partial combustion affected by throttle position ☐ Partial combustion NOT affected by throttle position ☐ Possible but hard to start ☐ Others [ ]	
	☐ Idling	☐ No fast idle ☐ Unstable ☐ High idle ☐ Low idle ☐ Others [ ]	
	☐ Driveability	☐ Stumble ☐ Surge ☐ Knock ☐ Lack of power ☐ Intake backfire ☐ Exhaust backfire ☐ Others [ ]	
	☐ Engine stall	☐ At the time of start ☐ While idling ☐ While accelerating ☐ While decelerating ☐ Just after stopping ☐ While loading	
Incident occurrence		☐ Just after delivery ☐ Recently ☐ In the morning ☐ At night ☐ In the daytime	
Frequency		☐ All the time ☐ Under certain conditions ☐ Sometimes	
Weather conditions		☐ Not affected	
	Weather	☐ Fine ☐ Raining ☐ Snowing ☐ Others [ ]	
	Temperature	☐ Hot ☐ Warm ☐ Cool ☐ Cold ☐ Humid °F	
Engine conditions		☐ Cold ☐ During warm-up ☐ After warm-up Engine speed 0 2,000 4,000 6,000 8,000 rpm	
Road conditions		☐ In town ☐ In suburbs ☐ Highway ☐ Off road (up/down)	
Driving conditions		☐ Not affected ☐ At starting ☐ While idling ☐ At racing ☐ While accelerating ☐ While cruising ☐ While decelerating ☐ While turning (RH/LH) Vehicle speed 0 10 20 30 40 50 60 MPH	
Malfunction indicator lamp		☐ Turned on ☐ Not turned on	

MTBL0017

DTC Inspection Priority Chart

BBS002U2

If some DTCs are displayed at the same time, perform inspections one by one based on the following priority chart.

NOTE:

- **If DTC U1001 is displayed with other DTC, first perform the trouble diagnosis for DTC U1001. Refer to EC-134, "DTC U1001 CAN COMMUNICATION LINE" .**
- **If DTC U1010 is displayed with other DTC, first perform the trouble diagnosis for DTC U1010. Refer to EC-137, "DTC U1010 CAN COMMUNICATION" .**

Priority	Detected items (DTC)
1	● U1001 CAN communication line ● U1010 CAN communication ● P0107 P0108 Manifold absolute pressure sensor ● P0112 P0113 Intake air temperature sensor ● P0117 P0118 Engine coolant temperature sensor ● P0122 P0123 P0222 P0223 P1225 P1226 P2135 Throttle position sensor ● P0327 P0328 Knock sensor ● P0335 Crankshaft position sensor (POS) ● P0340 Camshaft position sensor (PHASE) ● P0500 Vehicle speed sensor ● P0605 ECM ● P1171 Intake error ● P1229 Sensor power supply ● P1610-P1615 NATS ● P1706 Park/Neutral position (PNP) switch ● P2122 P2123 P2127 P2128 P2138 Accelerator pedal position sensor
2	● P0031 P0032 Heated oxygen sensor 1 heater ● P0037 P0038 Heated oxygen sensor 2 heater ● P0132 P0133 P0134 P1143 P1144 Heated oxygen sensor 1 ● P0138 P0139 P1146 P1147 Heated oxygen sensor 2 ● P0444 EVAP canister purge volume control solenoid valve ● P1065 ECM power supply ● P1111 Intake valve timing control solenoid valve ● P1122 Electric throttle control function ● P1124 P1126 Throttle control motor relay ● P1128 Throttle control mother ● P1805 Brake switch
3	● P0011 Intake valve timing control ● P0171 P0172 Fuel injection system function ● P0300 - P0304 Misfire ● P0420 Three way catalyst function ● P1121 Electric throttle control actuator ● P1211 ESP control unit ● P1212 ESP communication line ● P1217 Engine over temperature (OVERHEAT)

Fail-Safe Chart

BBS002U3

When the DTC listed bellow is detected, the ECM enters fail-safe mode and the MI lights up.

DTC No.	Detected items	Engine operating condition in fail-safe mode
P0117 P0118	Engine coolant temperature sensor circuit	Engine coolant temperature will be determined by ECM based on the time after turning ignition switch ON or START. CONSULT-II displays the engine coolant temperature decided by ECM.
		Condition: Engine coolant temperature decided (CONSULT-II display) Just as ignition switch is turned ON or START: 40°C (104°F) More than approx. 4 minutes after ignition ON or START: 80°C (176°F) Except as shown above: 40 - 80°C (104 - 176°F) (Depends on the time)
		When the fail-safe system for engine coolant temperature sensor is activated, the cooling fan operates while engine is running.
P0122 P0123 P0222 P0223 P2135	Throttle position sensor	The ECM controls the electric throttle control actuator in regulating the throttle opening in order for the idle position to be within +10 degrees. The ECM regulates the opening speed of the throttle valve to be slower than the normal condition. So, the acceleration will be poor.
P1121	Electric throttle control actuator	(When electric throttle control actuator does not function properly due to the return spring malfunction:) ECM controls the electric throttle control actuator by regulating the throttle opening around the idle position. The engine speed will not rise more than 2,000 rpm.
		(When throttle valve opening angle in fail-safe mode is not in specified range:) ECM controls the electric throttle control actuator by regulating the throttle opening to 20 degrees or less.
		(When ECM detects the throttle valve is stuck open:) While the vehicle is driving, it slows down gradually by fuel cut. After the vehicle stops, the engine stalls. The engine can restart in Neutral position, and engine speed will not exceed 1,000 rpm or more.
P1122	Electric throttle control function	ECM stops the electric throttle control actuator control, throttle valve is maintained at a fixed opening (approx. 5 degrees) by the return spring.
P1124 P1126	Throttle control motor relay	ECM stops the electric throttle control actuator control, throttle valve is maintained at a fixed opening (approx. 5 degrees) by the return spring.
P1128	Throttle control motor	ECM stops the electric throttle control actuator control, throttle valve is maintained at a fixed opening (approx. 5 degrees) by the return spring.
P1171	Intake air system	When accelerator pedal is depressed, engine speed will not rise more than 2,500 rpm due to fuel cut.
P1229	Sensor power supply	ECM stops the electric throttle control actuator control, throttle valve is maintained at a fixed opening (approx. 5 degrees) by the return spring.
P2122 P2123 P2127 P2128 P2138	Accelerator pedal position sensor	The ECM controls the electric throttle control actuator in regulating the throttle opening in order for the idle position to be within +10 degrees. The ECM regulates the opening speed of the throttle valve to be slower than the normal condition. So, the acceleration will be poor.

- When there is an open circuit on MI circuit, the ECM can not warn the driver by lighting up MI when there is a malfunction on engine control system.
  Therefore, when electrical controlled throttle and part of ECM related diagnoses is continuously detected as NG for 5 trips, ECM warns the driver that engine control system has a malfunction and MI circuit is open by means of operating fail-safe function.
  The fail-safe function also operate when above diagnoses except MI circuit are detected and demands the driver to repair the malfunction.

Engine operating condition in fail-safe mode	Engine speed will not rise more than 2,500 rpm due to the fuel cut

Symptom Matrix Chart

BBS002U5

SYSTEM — BASIC ENGINE CONTROL SYSTEM

		SYMPTOM													Reference page
		HARD/NO START/RESTART (EXCP. HA)	ENGINE STALL	HESITATION/SURGING/FLAT SPOT	SPARK KNOCK/DETONATION	LACK OF POWER/POOR ACCELERATION	HIGH IDLE/LOW IDLE	ROUGH IDLE/HUNTING	IDLING VIBRATION	SLOW/NO RETURN TO IDLE	OVERHEATS/WATER TEMPERATURE HIGH	EXCESSIVE FUEL CONSUMPTION	EXCESSIVE OIL CONSUMPTION	BATTERY DEAD (UNDER CHARGE)	
Warranty symptom code		AA	AB	AC	AD	AE	AF	AG	AH	AJ	AK	AL	AM	HA	
Fuel	Fuel pump circuit	1	1	2	3	2		2	2			3		2	EC-427
	Fuel pressure regulator system	3	3	4	4	4	4	4	4	4		4			EC-72
	Fuel injector circuit	1	1	2	3	2		2	2			2			EC-421
	Evaporative emission system	3	3	4	4	4	4	4	4	4		4			EC-40
Air	Positive crankcase ventilation system	3	3	4	4	4	4	4	4	4		4	1		EC-45
	Incorrect idle speed adjustment	3	3				1	1	1	1		1			EC-66
	Electric throttle control actuator	1	1	2	3	3	2	2	2	2		2		2	EC-291, EC-293 , EC-299 , EC-305
Ignition	Incorrect ignition timing adjustment	3	3	1	1	1		1	1			1			EC-66
	Ignition circuit	1	1	2	2	2		2	2			2			EC-433
Power supply and ground circuit		2	2	3	3	3		3	3		2	3			EC-128
Manifold absolute pressure sensor circuit		1	1	2	2	2		2	2			2			EC-155
Engine coolant temperature sensor circuit		1	1	2	2	2	3	2	2	3	1	2			EC-166
Throttle position sensor circuit			1	2		2	2	2	2	2		2			EC-171, EC-233 , EC-359 , EC-361 , EC-402
Accelerator pedal position sensor circuit				3	2	1	2			2					EC-363, EC-383 , EC-392 , EC-409
Heated oxygen sensor 1 circuit			1	2	3	2		2	2			2			EC-178, EC-185 , EC-195 , EC-310 , EC-316
Knock sensor circuit				2	2							3			EC-246
Crankshaft position sensor (POS) circuit		2	2												EC-250
Camshaft position sensor (PHASE) circuit		2	2												EC-257
Vehicle speed signal circuit			2	3		3						3			EC-277

	SYMPTOM													Reference page
	HARD/NO START/RESTART (EXCP. HA)	ENGINE STALL	HESITATION/SURGING/FLAT SPOT	SPARK KNOCK/DETONATION	LACK OF POWER/POOR ACCELERATION	HIGH IDLE/LOW IDLE	ROUGH IDLE/HUNTING	IDLING VIBRATION	SLOW/NO RETURN TO IDLE	OVERHEATS/WATER TEMPERATURE HIGH	EXCESSIVE FUEL CONSUMPTION	EXCESSIVE OIL CONSUMPTION	BATTERY DEAD (UNDER CHARGE)	
Warranty symptom code	AA	AB	AC	AD	AE	AF	AG	AH	AJ	AK	AL	AM	HA	
ECM	2	2	3	3	3	3	3	3	3	3	3			EC-279, EC-282
Intake valve timing control solenoid valve circuit	3	3	2		1	3	2	2	3		3			EC-286
PNP switch circuit			3		3	3	3	3	3		3			EC-371
Refrigerant pressure sensor circuit		2				3	3	3	3		4			EC-443
Electrical load signal circuit						3	3	3	3					EC-419
Air conditioner circuit	2	2	3	3	3	3	3	3	3		3		2	ATC-26, MTC-23
ABS actuator and electric unit (control unit)			4											BRC-8 or BRC-49

1 - 6: The numbers refer to the order of inspection.
(continued on next page)

SYSTEM — ENGINE MECHANICAL & OTHER

		SYMPTOM													Reference page
		HARD/NO START/RESTART (EXCP. HA)	ENGINE STALL	HESITATION/SURGING/FLAT SPOT	SPARK KNOCK/DETONATION	LACK OF POWER/POOR ACCELERATION	HIGH IDLE/LOW IDLE	ROUGH IDLE/HUNTING	IDLING VIBRATION	SLOW/NO RETURN TO IDLE	OVERHEATS/WATER TEMPERATURE HIGH	EXCESSIVE FUEL CONSUMPTION	EXCESSIVE OIL CONSUMPTION	BATTERY DEAD (UNDER CHARGE)	
Warranty symptom code		AA	AB	AC	AD	AE	AF	AG	AH	AJ	AK	AL	AM	HA	
Fuel	Fuel tank	5	5												FL-8
	Fuel piping			5	5	5		5	5			5			FL-3, EM-32
	Vapor lock														—
	Valve deposit	5		5	5	5		5	5			5			—
	Poor fuel (Heavy weight gasoline, Low octane)														—
Air	Air duct	5	5	5	5	5	5	5	5	5		5			EM-18
	Air cleaner														
	Air leakage from air duct (Manifold absolute pressure sensor —electric throttle control actuator)														
	Electric throttle control actuator														
	Air leakage from intake manifold/Collector/Gasket														EM-22
Cranking	Battery	1	1	1		1		1	1			1		1	SC-5
	Alternator circuit														SC-15
	Starter circuit	3													SC-45
	Signal plate/Flywheel/Drive plate	6													EM-74
	PNP switch	4													AT-109, MT-16
Engine	Cylinder head	5	5	5	5	5		5	5			5			EM-60
	Cylinder head gasket										4		3		
	Cylinder block	6	6	6	6	6		6	6			6	4		EM-74
	Piston														
	Piston ring														
	Connecting rod														
	Bearing														
	Crankshaft														

		SYMPTOM													Reference page
		HARD/NO START/RESTART (EXCP. HA)	ENGINE STALL	HESITATION/SURGING/FLAT SPOT	SPARK KNOCK/DETONATION	LACK OF POWER/POOR ACCELERATION	HIGH IDLE/LOW IDLE	ROUGH IDLE/HUNTING	IDLING VIBRATION	SLOW/NO RETURN TO IDLE	OVERHEATS/WATER TEMPERATURE HIGH	EXCESSIVE FUEL CONSUMPTION	EXCESSIVE OIL CONSUMPTION	BATTERY DEAD (UNDER CHARGE)	
Warranty symptom code		AA	AB	AC	AD	AE	AF	AG	AH	AJ	AK	AL	AM	HA	
Valve mechanism	Timing chain	5	5	5	5	5		5	5			5			EM-50
	Camshaft														EM-38
	Intake valve timing control														EM-50
	Intake valve												3		EM-60
	Exhaust valve														
Exhaust	Exhaust manifold/Tube/Muffler/Gasket	5	5	5	5	5		5	5			5			EM-24, EX-3
	Three way catalyst														
Lubrication	Oil pan/Oil strainer/Oil pump/Oil filter/Oil gallery	5	5	5	5	5		5	5			5	2		EM-26, LU-9 , LU-10 , LU-5
	Oil level (Low)/Filthy oil														LU-6
Cooling	Radiator/Hose/Radiator filler cap	5	5	5	5	5		5	5		2	5			CO-12
	Thermostat									5					CO-19
	Water pump														CO-17
	Water gallery														CO-7
	Cooling fan									5					CO-12
	Coolant level (low)/Contaminated coolant														CO-8
NATS (Nissan Anti-theft System)		1	1												BL-215 or EC-44

1 - 6: The numbers refer to the order of inspection.

Engine Control Component Parts Location

BBS002U6

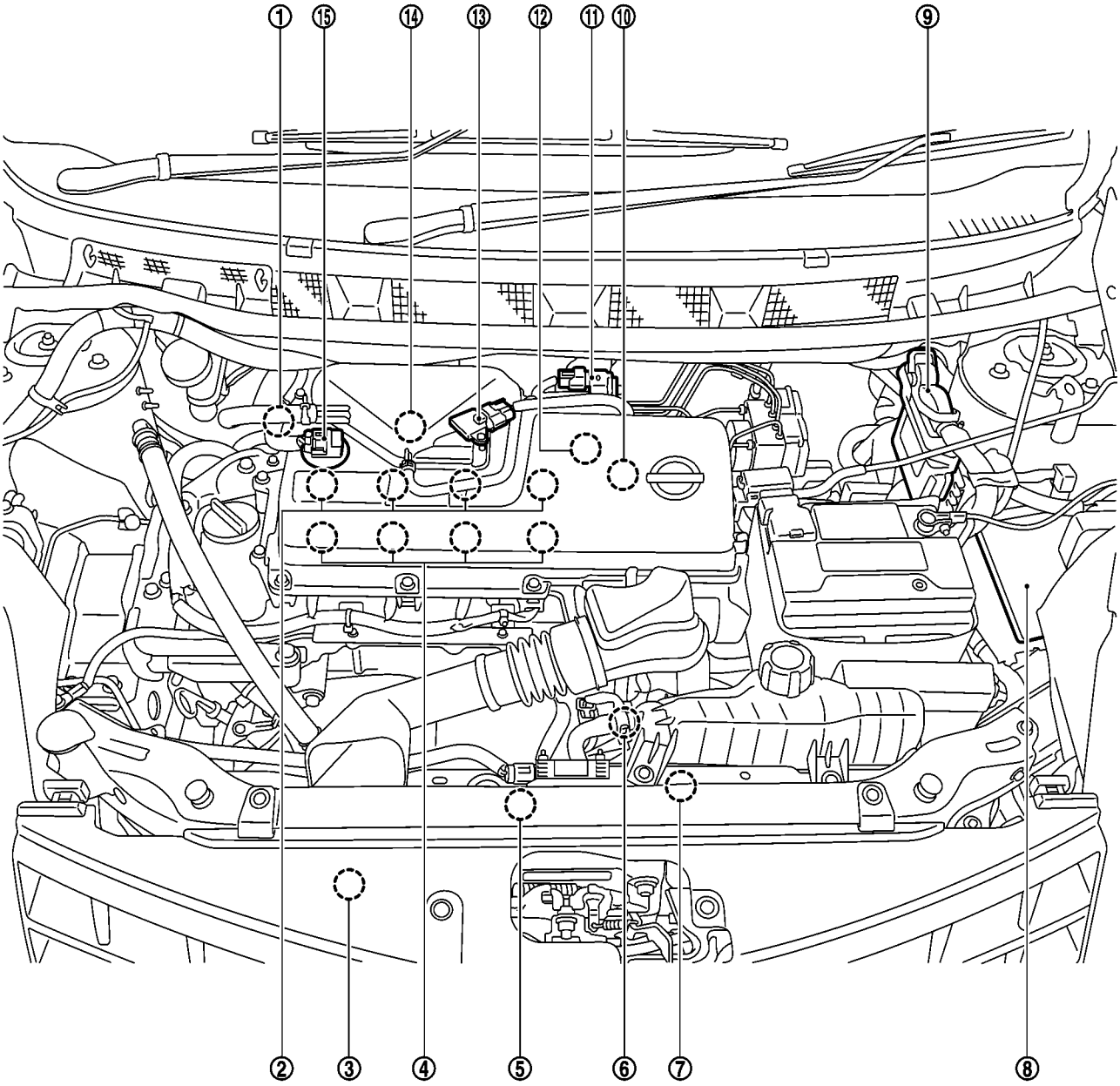

MBIB1491E

1. Intake valve timing control solenoid valve	2. Fuel injector	3. Refrigerant pressure sensor
4. Ignition coil (with power transistor) and spark plug	5. Heated oxygen sensor 1	6. Crankshaft position sensor (POS)
7. Cooling fan motor	8. IPDM E/R	9. ECM
10. Camshaft position sensor (PHASE)	11. EVAP canister purge volume control solenoid valve	12. Engine coolant temperature sensor
13. Manifold absolute pressure sensor (with intake air temperature sensor)	14. Knock sensor	15. Electric throttle control actuator

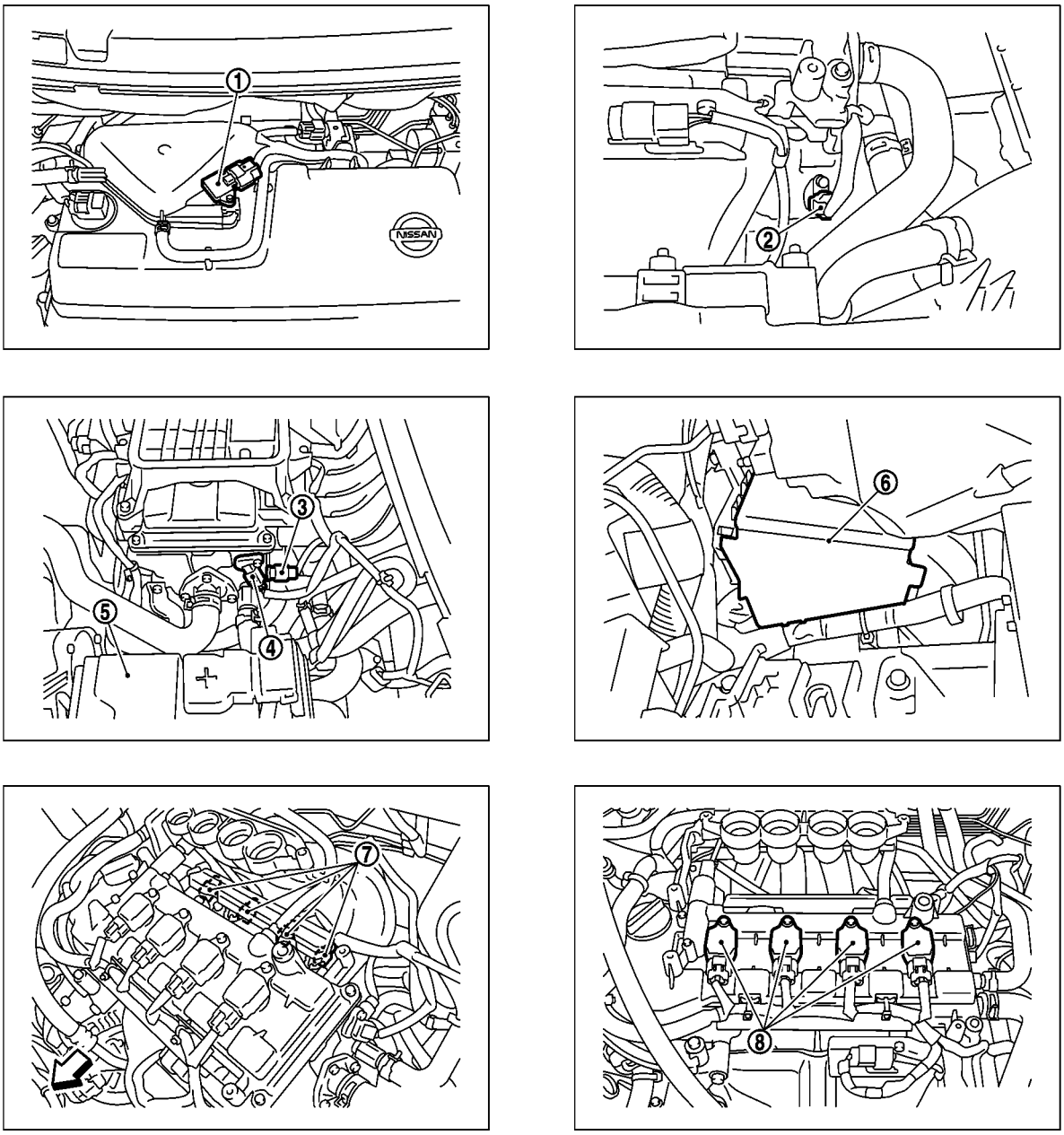

MBIB1498E

⇦ Vehicle front

1. Manifold absolute pressure sensor (with intake air temperature sensor)
2. Crankshaft position sensor (POS)
3. Engine coolant temperature sensor
4. Camshaft position sensor (PHASE)
5. Battery
6. IPDM E/R
7. Fuel injector
8. Ignition coil (with power transistor)

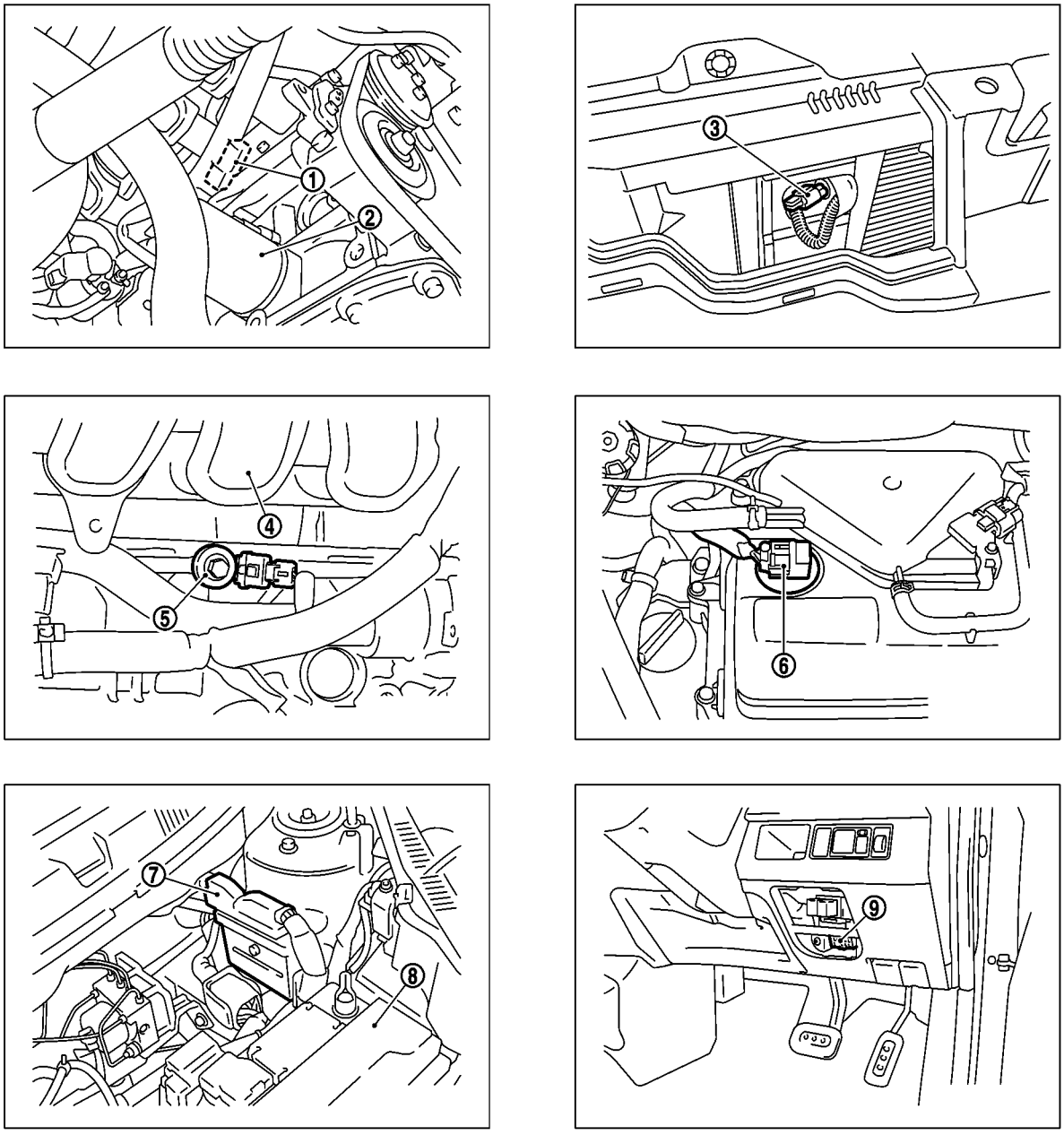

MBIB1499E

1. Condenser
2. Oil filter
3. Refrigerant pressure sensor
4. Intake manifold
5. Knock sensor
6. Electric throttle control actuator
7. ECM
8. Battery
9. Data link connector

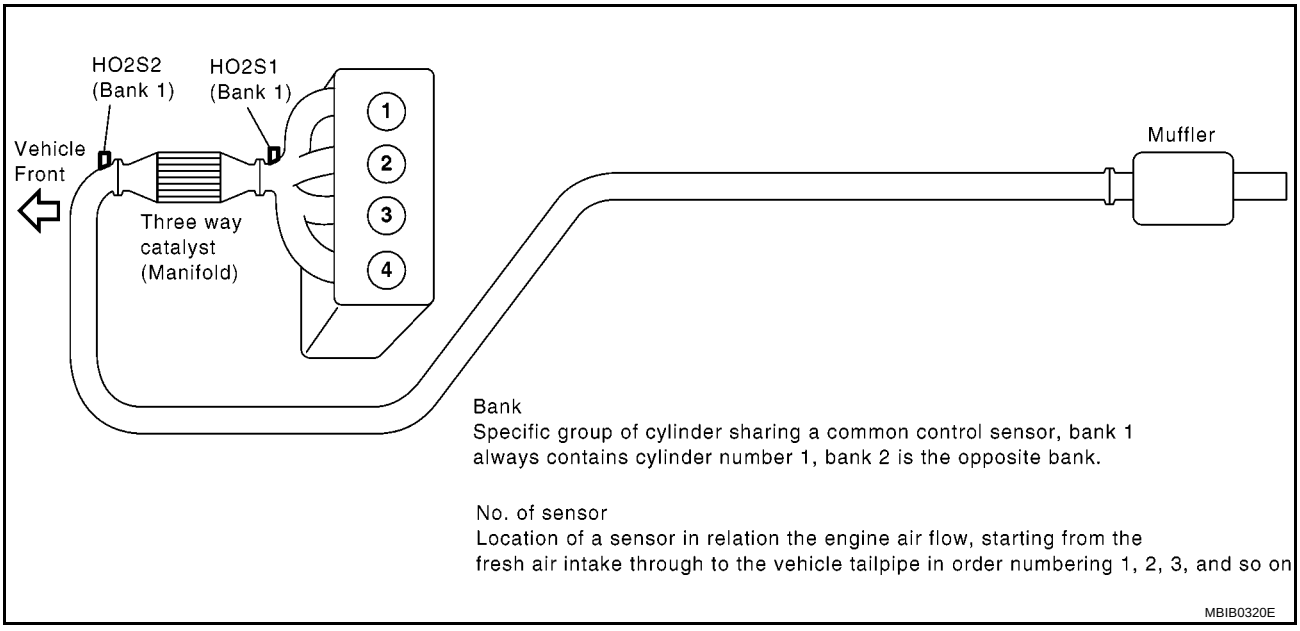

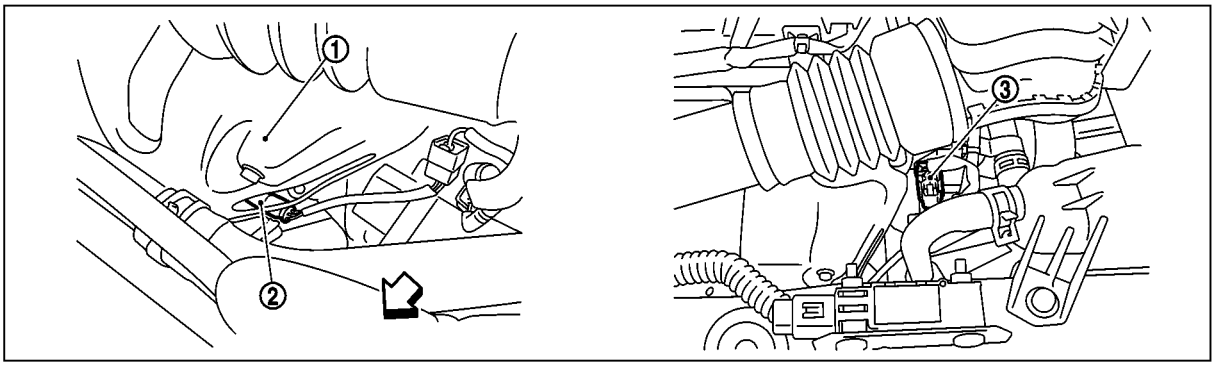

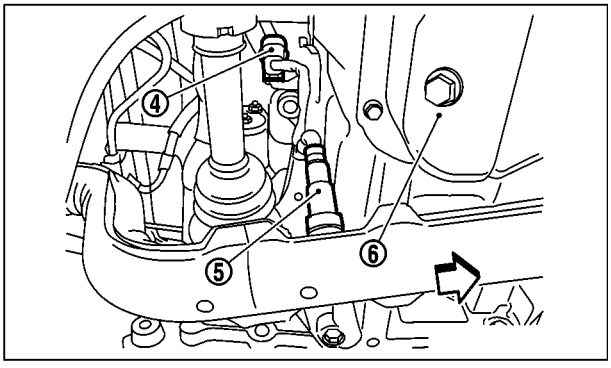

MBIB1460E

⇦ Vehicle front

1. Exhaust manifold cover
2. Heated oxygen sensor 1
3. Heated oxygen sensor 1 harness connector
4. Heated oxygen sensor 2 harness connector
5. Heated oxygen sensor 2
6. Oil pan

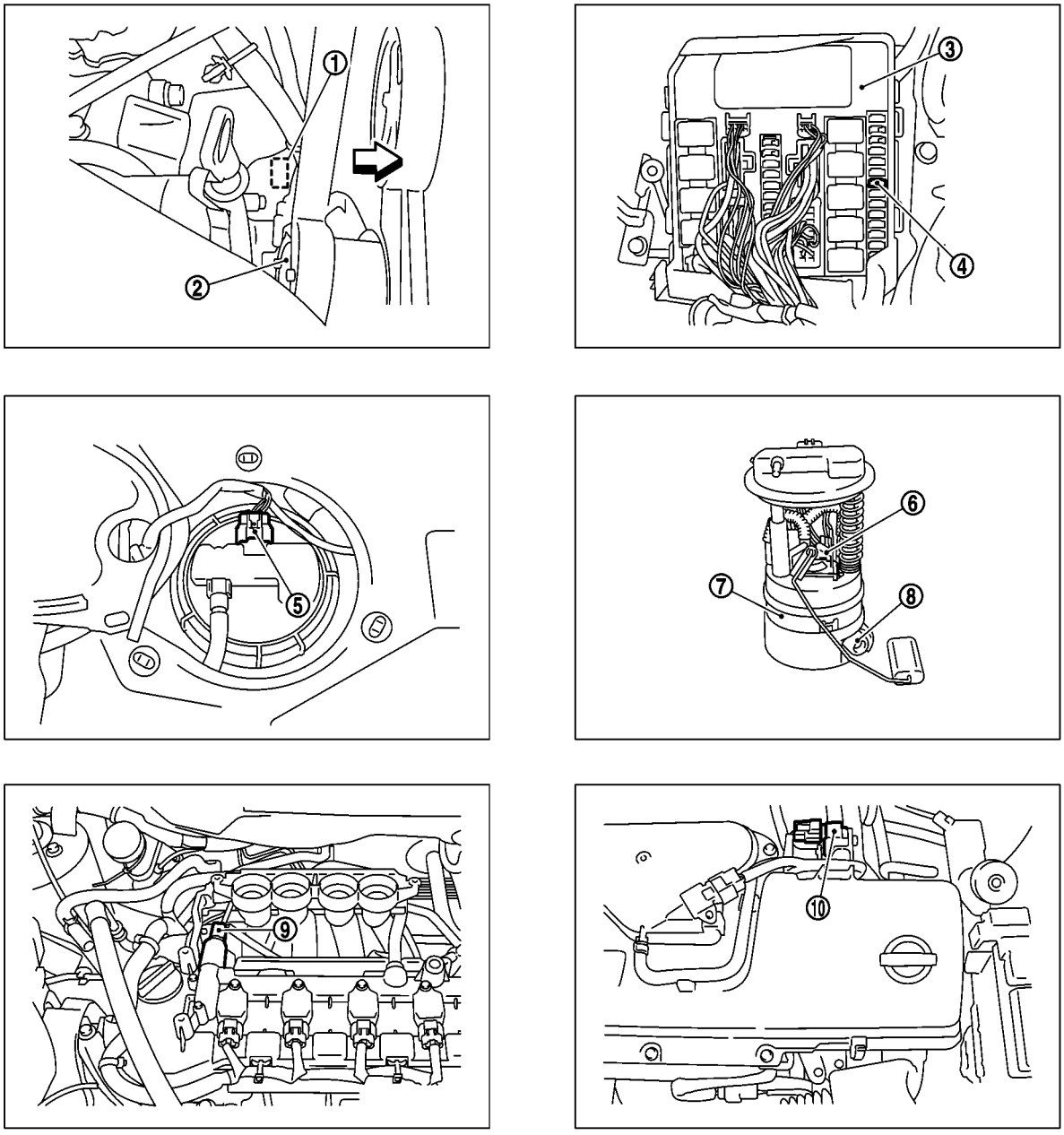

MBIB1500E

⇦ Vehicle front

1. Park/neutral position switch
2. Cooling fan motor
3. IPDM E/R
4. Fuel pump fuse (15A)
5. Fuel level sensor unit and fuel pump harness connector
6. Fuel level sensor unit
7. Fuel pump and fuel filter
8. Fuel pressure regulator
9. Intake valve timing control solenoid valve
10. EVAP canister purge volume control solenoid valve

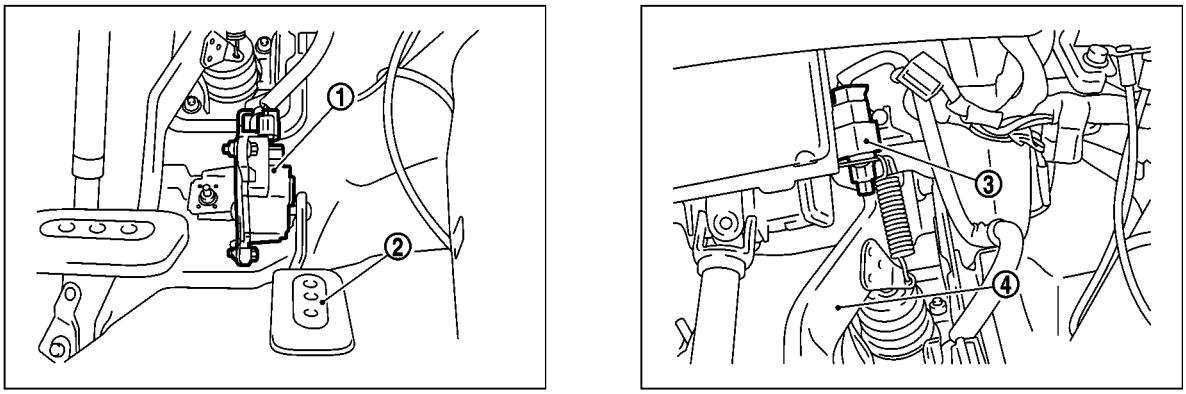

MBIB1501E

1. Accelerator pedal position sensor
2. Accelerator pedal
3. Stop lamp switch
4. Brake pedal

Vacuum Hose Drawing

BBS002TJ

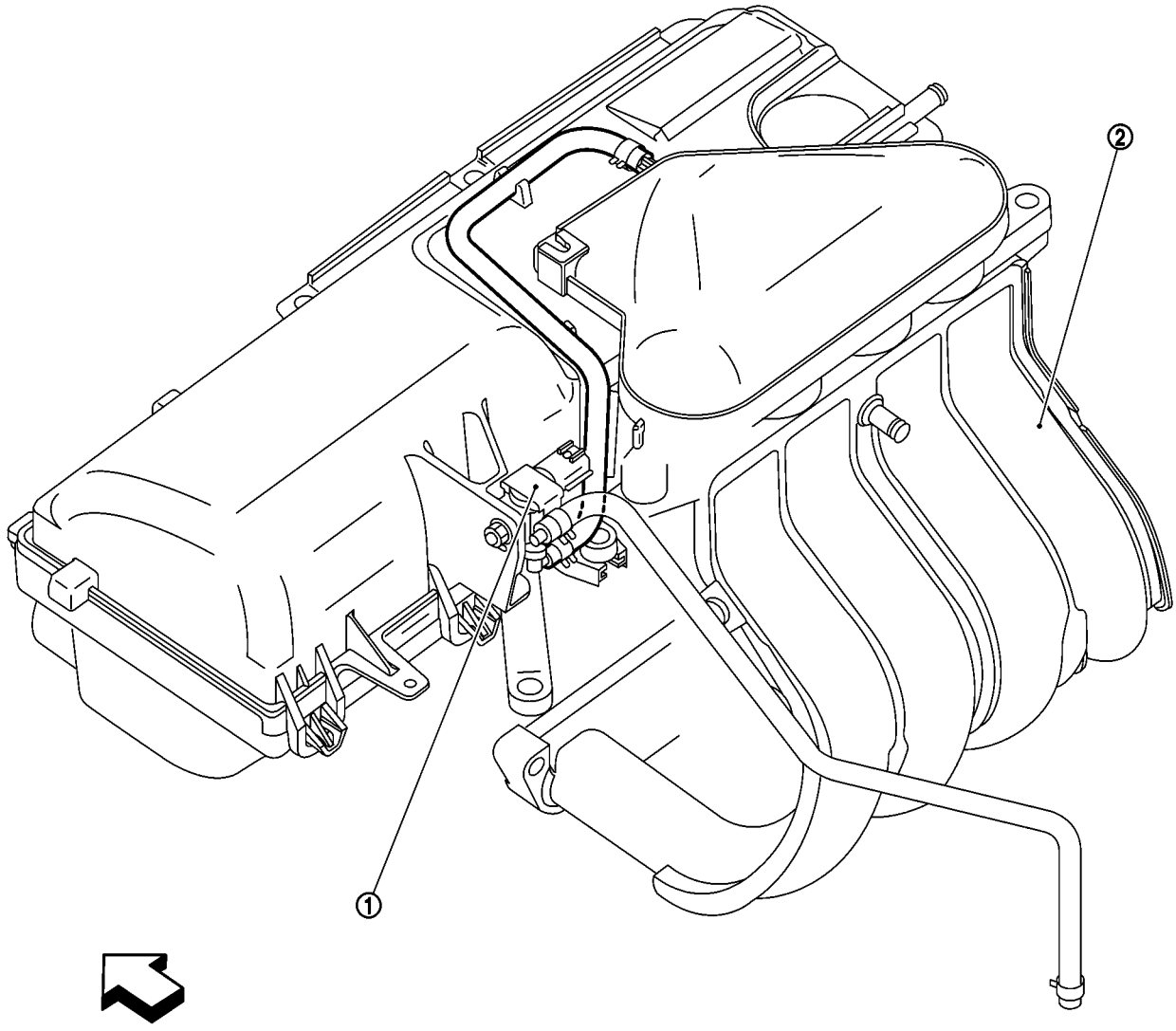

MBIB1440E

⇦ : Vehicle front

1. EVAP canister purge volume control solenoid valve
2. Intake manifold

NOTE:
Do not use soapy water or any type of solvent while installing vacuum hose or purge hoses.

Refer to EC-33, "System Diagram" for Vacuum Control System.

Circuit Diagram

BBS002U7

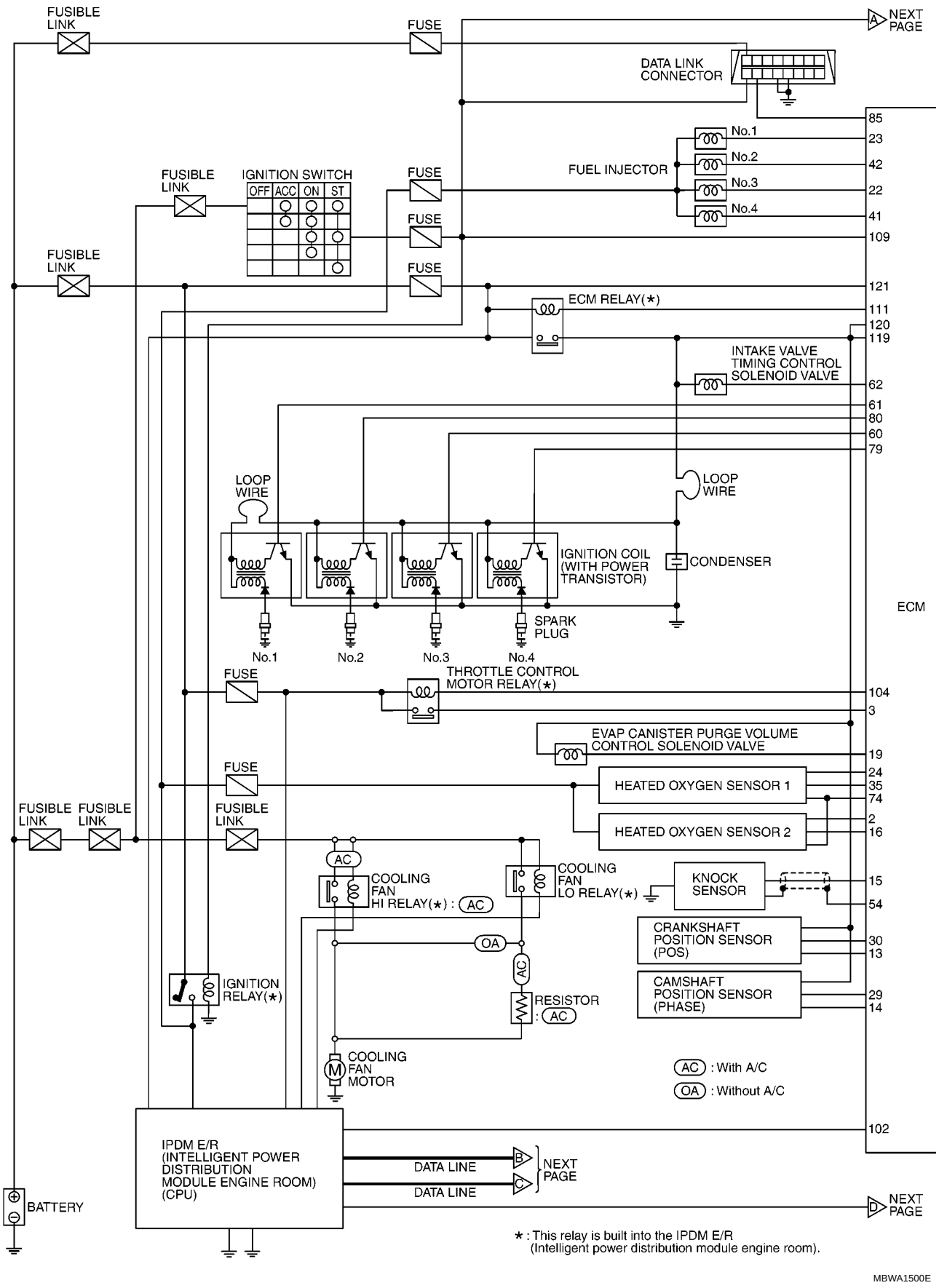

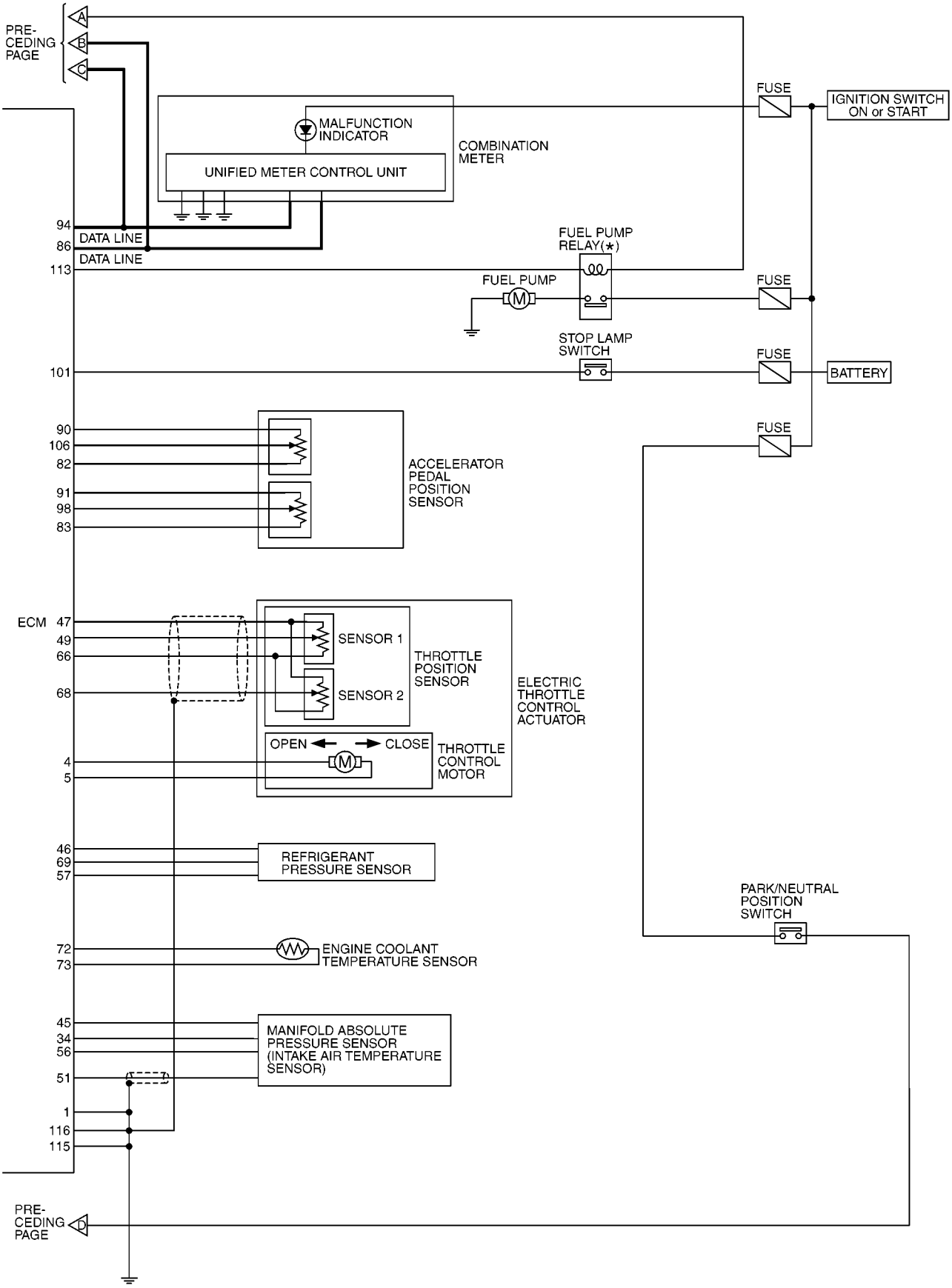
PRE-CEDING PAGE
A
B
C
FUSE
IGNITION SWITCH ON or START
MALFUNCTION INDICATOR
COMBINATION METER
UNIFIED METER CONTROL UNIT
94
86
113
DATA LINE
DATA LINE
FUEL PUMP RELAY(*)
FUEL PUMP
M
FUSE
STOP LAMP SWITCH
FUSE
101
BATTERY
FUSE
90
106
82
91
98
83
ACCELERATOR PEDAL POSITION SENSOR
ECM
47
49
66
68
SENSOR 1
SENSOR 2
THROTTLE POSITION SENSOR
ELECTRIC THROTTLE CONTROL ACTUATOR
OPEN
CLOSE
M
THROTTLE CONTROL MOTOR
4
5
46
69
57
REFRIGERANT PRESSURE SENSOR
PARK/NEUTRAL POSITION SWITCH
72
73
ENGINE COOLANT TEMPERATURE SENSOR
45
34
56
51
MANIFOLD ABSOLUTE PRESSURE SENSOR (INTAKE AIR TEMPERATURE SENSOR)
1
116
115
PRE-CEDING PAGE
D

MBWA1501E

ECM Harness Connector Terminal Layout

BBS002U8

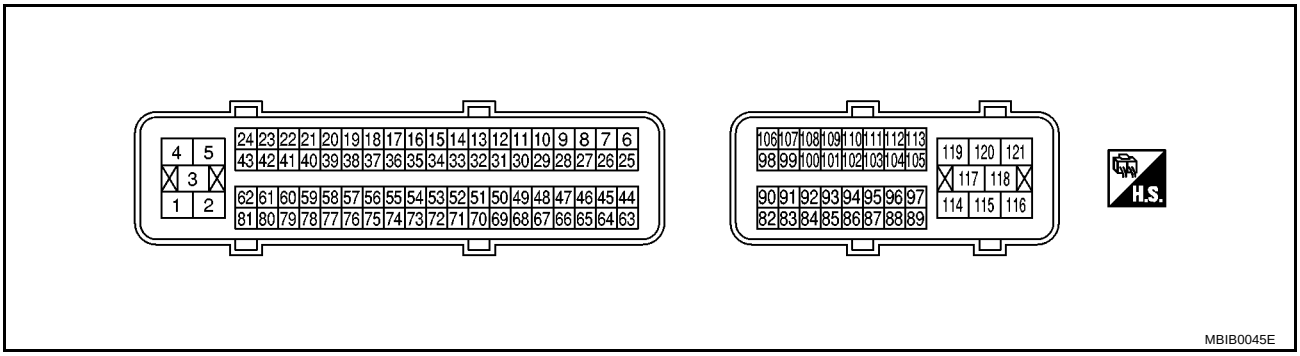

ECM Terminals and Reference Value

BBS002U9

PREPARATION

1. ECM is located left hand side of the engine room.
2. Remove ECM harness protector.

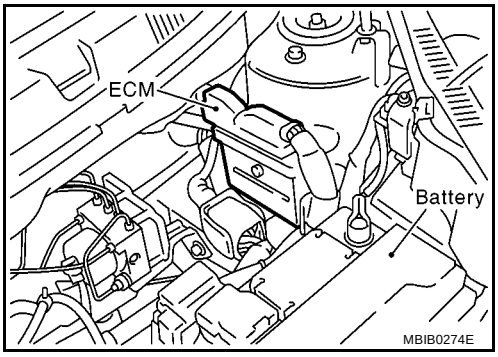

3. When disconnecting ECM harness connector, loosen it with levers as far as they will go as shown at right.
4. Connect a break-out box (SST) and Y-cable adapter (SST) between the ECM and ECM harness connector.
   - Use extreme care not to touch 2 pins at one time.
   - Data is for comparison and may not be exact.

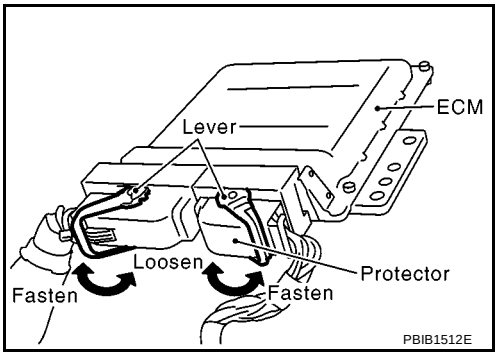

ECM INSPECTION TABLE

Specification data are reference values and are measured between each terminal and ground.
Pulse signal is measured by CONSULT-II.

CAUTION:

Do not use ECM ground terminals when measuring input/output voltage. Doing so may result in damage to the ECM's transistor. Use a ground other than ECM terminals, such as the ground.

TERMINAL NO.	WIRE COLOR	ITEM	CONDITION	DATA (DC Voltage)
1	B	ECM ground	**[Engine is running]** ● Idle speed	Body ground

TERMINAL NO.	WIRE COLOR	ITEM	CONDITION	DATA (DC Voltage)
2	GR	Heated oxygen sensor 2 heater	**[Engine is running]** ● Engine speed: Below 3,800 rpm after the following conditions are met. – Engine: After warming up – Keeping the engine speed between 3,500 and 4,000 rpm for 1 minute and at idle for 1 minute under no load.	0 - 1.0V
			[Ignition switch: ON] ● Engine stopped **[Engine is running]** ● Engine speed: Above 3,800 rpm	BATTERY VOLTAGE (11 - 14V)
3	LG	Throttle control motor relay power supply	**[Ignition switch: ON]**	BATTERY VOLTAGE (11 - 14V)
4	L	Throttle control motor (Close)	**[Ignition switch: ON]** ● **Engine stopped** ● Shift lever position: 1st ● Accelerator pedal: Fully released	0 - 14V★ 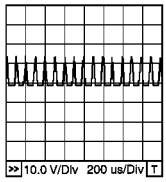 PBIB0534E
5	P	Throttle control motor (Open)	**[Ignition switch: ON]** ● **Engine stopped** ● Shift lever position: 1st ● Accelerator pedal: Fully depressed	0 - 14V★ 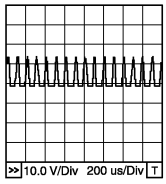 PBIB0533E
13	Y	Crankshaft position sensor (POS)	**[Engine is running]** ● **Warm-up condition** ● Idle speed **NOTE:** The pulse cycle changes depending on rpm at idle.	Approximately 3.0V★ 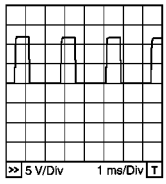 PBIB0527E
			[Engine is running] ● Engine speed: 2,000 rpm	Approximately 3.0V★ 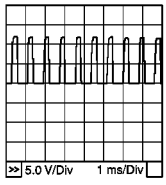 PBIB0528E

TERMINAL NO.	WIRE COLOR	ITEM	CONDITION	DATA (DC Voltage)
14	R	Camshaft position sensor (PHASE)	**[Engine is running]** ● **Warm-up condition** ● Idle speed **NOTE:** The pulse cycle changes depending on rpm at idle.	1.0 - 4.0V★ 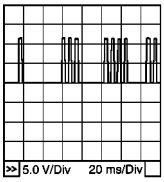 PBIB0525E
			[Engine is running] ● Engine speed: 2,000 rpm	1.0 - 4.0V★ 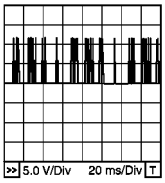 PBIB0526E
15	W	Knock sensor	**[Engine is running]** ● Idle speed	Approximately 2.5V
16	LG	Heated oxygen sensor 2	**[Engine is running]** ● Revving engine from idle to 3,000rpm quickly after the following conditions are met. – Engine: After warming up – Keeping the engine speed between 3,500 and 4,000 rpm for 1 minute and at idle for 1 minute under no load.	0 - Approximately 1.0V
19	LG	EVAP canister purge volume control solenoid valve	**[Engine is running]** ● Idle speed	BATTERY VOLTAGE (11 - 14V)★ 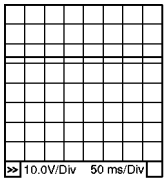 PBIB0050E
			[Engine is running] ● Engine speed: About 2,000 rpm (More than 100 seconds after starting engine)	Approximately 10V★ 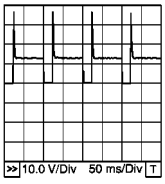 PBIB0520E

TERMINAL NO.	WIRE COLOR	ITEM	CONDITION	DATA (DC Voltage)
22 23 41 42	O L R GR	Fuel injector No. 3 Fuel injector No. 1 Fuel injector No. 4 Fuel injector No. 2	**[Engine is running]** ● **Warm-up condition** ● Idle speed **NOTE:** The pulse cycle changes depending on rpm at idle.	BATTERY VOLTAGE (11 - 14V)★ 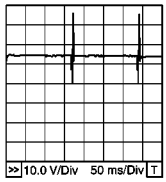 PBIB0529E
			[Engine is running] ● **Warm-up condition** ● Engine speed: 2,000 rpm	BATTERY VOLTAGE (11 - 14V)★ 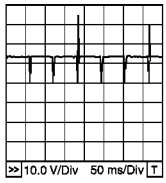 PBIB0530E
24	Y	Heated oxygen sensor 1 heater	**[Engine is running]** ● **Warm-up condition** ● Engine speed: Below 3,600 rpm	Approximately 7.0V★ 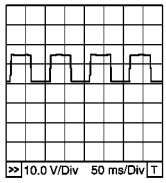 PBIB0519E
			[Engine is running] ● Engine speed: Above 3,600 rpm	BATTERY VOLTAGE (11 - 14V)
29	B	Sensor ground (Camshaft position sensor)	**[Engine is running]** ● **Warm-up condition** ● Idle speed	Approximately 0V
30	L	Sensor ground (Crankshaft position sensor)	**[Engine is running]** ● **Warm-up condition** ● Idle speed	Approximately 0V
34	O	Intake air temperature sensor	**[Engine is running]**	Approximately 0 - 4.8V Output voltage varies with intake air temperature.
35	BR	Heated oxygen sensor 1	**[Engine is running]** ● **Warm-up condition** ● Engine speed: 2,000 rpm	0 - Approximately 1.0V (Periodically change)
45	L	Sensor power supply	**[Ignition switch: ON]**	Approximately 5V
46	W	Sensor power supply (Refrigerant pressure sensor)	**[Ignition switch: ON]**	Approximately 5V
47	L	Sensor power supply (Throttle position sensor)	**[Ignition switch: ON]**	Approximately 5V

TERMINAL NO.	WIRE COLOR	ITEM	CONDITION	DATA (DC Voltage)
49	Y	Throttle position sensor 1	**[Ignition switch: ON]** ● **Engine stopped** ● Shift lever position: 1st ● Accelerator pedal: Fully released	More than 0.36V
			[Ignition switch: ON] ● **Engine stopped** ● Shift lever position: 1st ● Accelerator pedal: Fully depressed	Less than 4.75V
51	W	Manifold absolute pressure sensor	**[Engine is running]** ● **Warm-up condition** ● Idle speed	Approximately 1.5V
			[Engine is running] ● **Warm-up condition** ● Engine speed: 2,000 rpm	Approximately 1.2V
54	—	Sensor ground (Knock sensor)	**[Engine is running]** ● **Warm-up condition** ● Idle speed	Approximately 0V
56	B	Sensor ground (Manifold absolute pressure sensor)	**[Engine is running]** ● **Warm-up condition** ● Idle speed	Approximately 0V
57	Y	Sensor ground (Refrigerant pressure sensor)	**[Engine is running]** ● **Warm-up condition** ● Idle speed	Approximately 0V
60 61 79 80	Y V G BR	Ignition signal No. 3 Ignition signal No. 1 Ignition signal No. 4 Ignition signal No. 2	**[Engine is running]** ● **Warm-up condition** ● Idle speed **NOTE:** The pulse cycle changes depending on rpm at idle.	0 - 0.1V★ 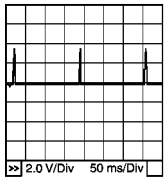 PBIB0521E
			[Engine is running] ● **Warm-up condition** ● Engine speed: 2,000 rpm	0 - 0.2V★ 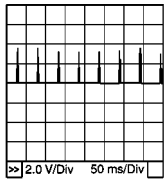 PBIB0522E

TERMINAL NO.	WIRE COLOR	ITEM	CONDITION	DATA (DC Voltage)
62	LG	Intake valve timing control solenoid valve	**[Engine is running]** ● **Warm-up condition** ● Idle speed	BATTERY VOLTAGE (11 - 14V)★
			[Engine is running] ● **Warm-up condition** ● Engine speed: 2,000 rpm	Approximately 4V - BATTERY VOLTAGE (11 - 14V)★ 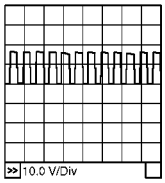 PBIB1790E
66	B	Sensor ground (Throttle position sensor)	**[Engine is running]** ● **Warm-up condition** ● Idle speed	Approximately 0V
68	R	Throttle position sensor 2	**[Ignition switch: ON]** ● **Engine stopped** ● Shift lever position: 1st ● Accelerator pedal: Fully released	Less than 4.75V
			[Ignition switch: ON] ● **Engine stopped** ● Shift lever position: 1st ● Accelerator pedal: Fully depressed	More than 0.36V
69	BR	Refrigerant pressure sensor	**[Engine is running]** ● **Warm-up condition** ● Both A/C switch and blower fan switch: ON (Compressor operates.)	1.0 - 4.0V
72	P	Engine coolant temperature sensor	**[Engine is running]**	Approximately 0 - 4.8V Output voltage varies with engine coolant temperature.
73	B	Sensor ground (Engine coolant temperature sensor)	**[Engine is running]** ● **Warm-up condition** ● Idle speed	Approximately 0V
74	B	Sensor ground (Heated oxygen sensor)	**[Engine is running]** ● **Warm-up condition** ● Idle speed	Approximately 0V
82	B	Sensor ground (APP sensor 1)	**[Engine is running]** ● **Warm-up condition** ● Idle speed	Approximately 0V
83	B	Sensor ground (APP sensor 2)	**[Engine is running]** ● **Warm-up condition** ● Idle speed	Approximately 0V
85	LG	DATA link connector	**[Ignition switch: ON]** ● CONSULT-II or GST: Disconnected	BATTERY VOLTAGE (11 - 14V)
86	Y	CAN communication line	**[Ignition switch: ON]**	1.0 - 2.5V
90	O	Sensor power supply (APP sensor 1)	**[Ignition switch: ON]**	Approximately 5V
91	BR	Sensor power supply (APP sensor 2)	**[Ignition switch: ON]**	Approximately 5V

TERMINAL NO.	WIRE COLOR	ITEM	CONDITION	DATA (DC Voltage)
94	L	CAN communication line	**[Ignition switch: ON]**	2.5 - 4.0V
98	G	Accelerator pedal position sensor 2	**[Ignition switch: ON]** ● **Engine stopped** ● Accelerator pedal: Fully released	0.3 - 0.6V
			[Ignition switch: ON] ● **Engine stopped** ● Accelerator pedal: Fully depressed	1.95 - 2.4V
101	R	Stop lamp switch	**[Ignition switch: OFF]** ● Brake pedal: Fully released	Approximately 0V
			[Ignition switch: OFF] ● Brake pedal: Slightly depressed	BATTERY VOLTAGE (11 - 14V)
102	GR	PNP switch	**[Ignition switch: ON]** ● Gear position: Neutral	Approximately 0V
			[Ignition switch: ON] ● Except the above gear position	BATTERY VOLTAGE (11 - 14V)
104	G	Throttle control motor relay	**[Ignition switch: OFF]**	BATTERY VOLTAGE (11 - 14V)
			[Ignition switch: ON]	0 - 1.0V
106	W	Accelerator pedal position sensor 1	**[Ignition switch: ON]** ● **Engine stopped** ● Accelerator pedal: Fully released	0.6 - 0.9V
			[Ignition switch: ON] ● **Engine stopped** ● Accelerator pedal: Fully depressed	3.9 - 4.7V
109	O	Ignition switch	**[Ignition switch: OFF]**	0V
			[Ignition switch: ON]	BATTERY VOLTAGE (11 - 14V)
111	P	ECM relay (Self shut-off)	**[Engine is running]** **[Ignition switch: OFF]** ● For a few seconds after turning ignition switch OFF	0 - 1.0V
			[Ignition switch: OFF] ● More than a few seconds passed after turning ignition switch OFF	BATTERY VOLTAGE (11 - 14V)
113	R	Fuel pump relay	**[Ignition switch: ON]** ● For 1 second after turning ignition switch ON **[Engine is running]**	0 - 1.0V
			[Ignition switch: ON] ● More than 1 second after turning ignition switch ON	BATTERY VOLTAGE (11 - 14V)
115 116	B B	ECM ground	**[Engine is running]** ● Idle speed	Body ground
119 120	G G	Power supply for ECM	**[Ignition switch: ON]**	BATTERY VOLTAGE (11 - 14V)
121	BR	Power supply for ECM (Back-up)	**[Ignition switch: OFF]**	BATTERY VOLTAGE (11 - 14V)

★: Average voltage for pulse signal (Actual pulse signal can be confirmed by oscilloscope.)

CONSULT-II Function (ENGINE)

BBS002UA

FUNCTION

Diagnostic test mode	Function
Work support	This mode enables a technician to adjust some devices faster and more accurately by following the indications on the CONSULT-II unit.
Self-diagnostic results	Self-diagnostic results such as 1st trip DTC, DTCs and 1st trip freeze frame data or freeze frame data can be read and erased quickly.*
Data monitor	Input/Output data in the ECM can be read.
Data monitor (SPEC)	Input/Output of the specification for Basic fuel schedule, A/F feedback control value and the other data monitor items can be read.
CAN diagnostic support monitor	The results of transmit/receive diagnosis of CAN communication can be read.
Active test	Diagnostic Test Mode in which CONSULT-II drives some actuators apart from the ECMs and also shifts some parameters in a specified range.
Function test	This mode is used to inform customers when their vehicle condition requires periodic maintenance.
DTC & SRT confirmation	The status of system monitoring tests and the self-diagnosis status/result can be confirmed.
ECM part number	ECM part number can be read.

*: The following emission-related diagnostic information is cleared when the ECM memory is erased.

- Diagnostic trouble codes
- 1st trip diagnostic trouble codes
- Freeze frame data
- 1st trip freeze frame data
- System readiness test (SRT) codes
- Test values

ENGINE CONTROL COMPONENT PARTS/CONTROL SYSTEMS APPLICATION

Item			DIAGNOSTIC TEST MODE							
			WORK SUP-PORT	SELF-DIAGNOSTIC RESULTS		DATA MONI-TOR	DATA MONI-TOR (SPEC)	ACTIVE TEST	DTC & SRT CONFIRMATION	
				DTC*1	FREEZE FRAME DATA*2				SRT STATUS	DTC WORK SUP-PORT
ENGINE CONTROL COMPONENT PARTS	INPUT	Crankshaft position sensor (POS)		×	×	×	×			
		Camshaft position sensor (PHASE)		×		×	×			
		Manifold absolute pressure sensor		×		×	×			
		Engine coolant temperature sensor		×	×	×	×	×		
		Heated oxygen sensor 1		×		×	×		×	×
		Heated oxygen sensor 2		×		×	×		×	×
		Wheel sensor		×	×	×	×			
		Accelerator pedal position sensor		×		×	×			
		Throttle position sensor		×		×	×			
		Intake air temperature sensor		×	×	×	×			
		Knock sensor		×						
		Refrigerant pressure sensor				×	×			
		Closed throttle position switch (accelerator pedal position sensor signal)				×	×			
		Air conditioner switch				×	×			
		Park/neutral position (PNP) switch		×		×	×			
		Stop lamp switch		×		×	×			
		EPS control unit				×	×			
		Battery voltage				×	×			
		Electrical load signal				×	×			
ENGINE CONTROL COMPONENT PARTS	OUTPUT	Fuel injector				×	×	×		
		Power transistor (Ignition timing)				×	×	×		
		Throttle control motor relay		×		×	×			
		Throttle control motor		×						
		EVAP canister purge volume control solenoid valve		×		×	×	×		
		Air conditioner relay				×	×			
		Fuel pump relay	×			×	×	×		
		Cooling fan relay		×		×	×	×		
		Heated oxygen sensor 1 heater		×		×	×		×	
		Heated oxygen sensor 2 heater		×		×	×		×	
		Intake valve timing control solenoid valve		×		×	×	×		
		Calculated load value			×	×	×			

X: Applicable
*1: This item includes 1st trip DTCs.
*2: This mode includes 1st trip freeze frame data or freeze frame data. The items appear on CONSULT-II screen in freeze frame data mode only if a 1st trip DTC or DTC is detected. For details, refer to EC-50 .

INSPECTION PROCEDURE

Refer to GI-38, "CONSULT-II Data Link Connector (DLC) Circuit" .

WORK SUPPORT MODE

Work Item

WORK ITEM	CONDITION	USAGE
FUEL PRESSURE RELEASE	● FUEL PUMP WILL STOP BY TOUCHING “START” DURING IDLING. CRANK A FEW TIMES AFTER ENGINE STALLS.	When releasing fuel pressure from fuel line
IDLE AIR VOL LEARN	● THE IDLE AIR VOLUME THAT KEEPS THE ENGINE WITHIN THE SPECIFIED RANGE IS MEMORIZED IN ECM.	When learning the idle air volume
SELF-LEARNING CONT	● THE COEFFICIENT OF SELF-LEARNING CONTROL MIXTURE RATIO RETURNS TO THE ORIGINAL COEFFICIENT.	When clearing the coefficient of self-learning control value
TARGET IGN TIM ADJ*	● IDLE CONDITION	When adjusting target ignition timing
TARGET IDLE RPM ADJ*	● IDLE CONDITION	When setting target idle speed

*: This function is not necessary in the usual service procedure.

SELF-DIAG RESULTS MODE

Self Diagnostic Item

Regarding items of DTC and 1st trip DTC, refer to EC-48, "EMISSION-RELATED DIAGNOSTIC INFORMATION ITEMS" .

Freeze Frame Data and 1st Trip Freeze Frame Data

Freeze frame data item*	Description
DIAG TROUBLE CODE [PXXXX]	● The engine control component part/control system has a trouble code, it is displayed as PXXXX. (Refer to EC-22, "INDEX FOR DTC" .)
FUEL SYS-B1	● Fuel injection system status at the moment a malfunction is detected is displayed. ● One mode in the following is displayed. Mode2: Open loop due to detected system malfunction Mode3: Open loop due to driving conditions (power enrichment, deceleration enleanment) Mode4: Closed loop - using oxygen sensor(s) as feedback for fuel control Mode5: Open loop - has not yet satisfied condition to go to closed loop
CAL/LD VALUE [%]	● The calculated load value at the moment a malfunction is detected is displayed.
COOLANT TEMP [°C] or [°F]	● The engine coolant temperature at the moment a malfunction is detected is displayed.
L-FUEL TRM-B1 [%]	● “Long-term fuel trim” at the moment a malfunction is detected is displayed. ● The long-term fuel trim indicates much more gradual feedback compensation to the base fuel schedule than short-term fuel trim.
S-FUEL TRM-B1 [%]	● “Short-term fuel trim” at the moment a malfunction is detected is displayed. ● The short-term fuel trim indicates dynamic or instantaneous feedback compensation to the base fuel schedule.
ENGINE SPEED [rpm]	● The engine speed at the moment a malfunction is detected is displayed.
VEHICL SPEED [km/h] or [mph]	● The vehicle speed at the moment a malfunction is detected is displayed.
B/FUEL SCHDL [msec]	● The base fuel schedule at the moment a malfunction is detected is displayed.
INT/A TEMP SE [°C] or [°F]	● The intake air temperature at the moment a malfunction is detected is displayed.

*: The items are the same as those of 1st trip freeze frame data.

DATA MONITOR MODE
Monitored Item

×: Applicable

Monitored item [Unit]	ECM INPUT SIG-NALS	MAIN SIG-NALS	Description	Remarks
ENG SPEED [rpm]	×	×	● Indicates the engine speed computed from the signals of the crankshaft position sensor (POS) and camshaft position sensor (PHASE).	● Accuracy becomes poor if engine speed drops below the idle rpm. ● If the signal is interrupted while the engine is running, an abnormal value may be indicated.
COOLAN TEMP/S [°C] or [°F]	×	×	● The engine coolant temperature (determined by the signal voltage of the engine coolant temperature sensor) is displayed.	● When the engine coolant temperature sensor is open or short-circuited, ECM enters fail-safe mode. The engine coolant temperature determined by the ECM is displayed.
HO2S1 (B1) [V]	×	×	● The signal voltage of the heated oxygen sensor 1 is displayed.	
HO2S2 (B1) [V]	×		● The signal voltage of the heated oxygen sensor 2 is displayed.	
HO2S1 MNTR (B1) [RICH/LEAN]	×	×	● Display of heated oxygen sensor 1 signal during air-fuel ratio feedback control: RICH: means the mixture became “rich”, and control is being affected toward a leaner mixture. LEAN: means the mixture became “lean”, and control is being affected toward a rich mixture.	● After turning ON the ignition switch, “RICH” is displayed until air-fuel mixture ratio feedback control begins. ● When the air-fuel ratio feedback is clamped, the value just before the clamping is displayed continuously.
HO2S2 MNTR (B1) [RICH/LEAN]	×		● Display of heated oxygen sensor 2 signal: RICH: means the amount of oxygen after three way catalyst is relatively small. LEAN: means the amount of oxygen after three way catalyst is relatively large.	● When the engine is stopped, a certain value is indicated.
A/F ALPHA-B1 [%]		×	● The mean value of the air-fuel ratio feedback correction factor per cycle is indicated.	● When the engine is stopped, a certain value is indicated. ● This data also includes the data for the air-fuel ratio learning control.
VHCL SPEED SE [km/h] or [mph]	×	×	● The vehicle speed computed from the vehicle speed signal is displayed.	
BATTERY VOLT [V]	×	×	● The power supply voltage of ECM is displayed.	
B/FUEL SCHDL [msec]		×	● “Base fuel schedule” indicates the fuel injection pulse width programmed into ECM, prior to any learned on board correction.	
ACCEL SEN 1 [V]	×	×	● The accelerator pedal position sensor signal voltage is displayed.	● ACCEL SEN 2 signal is converted by ECM internally. Thus, it differs from ECM terminal voltage signal.
ACCEL SEN 2 [V]	×			
THRTL SEN 1 [V]	×	×	● The throttle position sensor signal voltage is displayed.	● THRTL SEN 2 signal is converted by ECM internally. Thus, it differs from ECM terminal voltage signal.
THRTL SEN 2 [V]	×			
INT/A TEMP SE [°C] or [°F]	×	×	● The intake air temperature (determined by the signal voltage of the intake air temperature sensor) is indicated.	
TURBO BST SEN [V]	×		● The signal voltage of the manifold absolute pressure sensor is displayed.	

Monitored item [Unit]	ECM INPUT SIG-NALS	MAIN SIG-NALS	Description	Remarks
START SIGNAL [ON/OFF]	×	×	● Indicates start signal status [ON/OFF] computed by the ECM according to the signals of engine speed and battery voltage.	● After starting the engine, [OFF] is displayed regardless of the starter signal.
CLSD THL POS [ON/OFF]	×	×	● Indicates idle position [ON/OFF] computed by the ECM according to the accelerator pedal position sensor signal.	
AIR COND SIG [ON/OFF]	×	×	● Indicates [ON/OFF] condition of the air conditioner switch as determined by the air conditioner signal.	
P/N POSI SW [ON/OFF]	×	×	● Indicates [ON/OFF] condition from the park/neutral position (PNP) switch signal.	
PW/ST SIGNAL [ON/OFF]	×	×	● [ON/OFF] condition of the power steering system (determined by the signal sent from EPS control unit) is indicated.	
LOAD SIGNAL [ON/OFF]	×	×	● Indicates [ON/OFF] condition from the electrical load signal. ON: Rear window defogger switch is ON and/or lighting switch is in 2nd position. OFF: Both rear window defogger switch and lighting switch are OFF.	
IGNITION SW [ON/OFF]	×		● Indicates [ON/OFF] condition from ignition switch.	
HEATER FAN SW [ON/OFF]	×		● Indicates [ON/OFF] condition from the heater fan switch signal.	
BRAKE SW [ON/OFF]	×		● Indicates [ON/OFF] condition from the stop lamp switch signal.	
INJ PULSE-B1 [msec]		×	● Indicates the actual fuel injection pulse width compensated by ECM according to the input signals.	● When the engine is stopped, a certain computed value is indicated.
IGN TIMING [BTDC]		×	● Indicates the ignition timing computed by ECM according to the input signals.	● When the engine is stopped, a certain value is indicated.
CAL/LD VALUE [%]			● “Calculated load value” indicates the value of the current airflow divided by peak airflow.	
PURG VOL C/V [%]			● Indicates the EVAP canister purge volume control solenoid valve control value computed by the ECM according to the input signals. ● The opening becomes larger as the value increases.	
INT/V TIM (B1) [°CA]			● Indicates [°CA] of intake camshaft advanced angle.	
INT/V SOL (B1) [%]			● The control value of the intake valve timing control solenoid valve (determined by ECM according to the input signals) is indicated. ● The advance angle becomes larger as the value increases.	
AIR COND RLY [ON/OFF]		×	● The air conditioner relay control condition (determined by ECM according to the input signals) is indicated.	

Monitored item [Unit]	ECM INPUT SIG-NALS	MAIN SIG-NALS	Description	Remarks
FUEL PUMP RLY [ON/OFF]		×	● Indicates the fuel pump relay control condition determined by ECM according to the input signals.	
THRTL RELAY [ON/OFF]		×	● Indicates the throttle control motor relay control condition determined by the ECM according to the input signals.	
COOLING FAN [HI/LOW/OFF]		×	● Indicates the condition of the cooling fan (determined by ECM according to the input signals). HI: High speed operation LOW: Low speed operation OFF: Stop	
HO2S1 HTR (B1) [ON/OFF]			● Indicates [ON/OFF] condition of heated oxygen sensor 1 heater determined by ECM according to the input signals.	
HO2S2 HTR (B1) [ON/OFF]			● Indicates [ON/OFF] condition of heated oxygen sensor 2 heater determined by ECM according to the input signals.	
IDL A/V LEARN [YET/CMPLT]			● Display the condition of idle air volume learning YET: Idle air volume learning has not been performed yet. CMPLT: Idle air volume learning has already been performed successfully.	
TRVL AFTER MIL [km] or [mile]			● Distance traveled while MI is activated.	
O2 SEN HTR DTY [%]			● Indicates the heated oxygen sensor 1 heater control valve computed by the ECM according to the input signals.	
AC PRESS SEN [V]	×		● The signal voltage from the refrigerant pressure sensor is displayed.	
Voltage [V]			● Voltage, frequency, duty cycle or pulse width measured by the probe.	● Only “#” is displayed if item is unable to be measured. ● Figures with “#”s are temporary ones. They are the same figures as an actual piece of data which was just previously measured.
Frequency [msec], [Hz] or [%]				
DUTY-HI				
DUTY-LOW				
PLS WIDTH-HI				
PLS WIDTH-LOW				

NOTE:
- Any monitored item that does not match the vehicle being diagnosed is deleted from the display automatically.

DATA MONITOR (SPEC) MODE

Monitored Item

Monitored item [Unit]	ECM INPUT SIGNALS	MAIN SIGNALS	Description	Remarks
ENG SPEED [rpm]	×		● Indicates the engine speed computed from the signal of the crankshaft position sensor (POS) and camshaft position sensor (PHASE).	
B/FUEL SCHDL [msec]			● “Base fuel schedule” indicates the fuel injection pulse width programmed into ECM, prior to any learned on board correction.	● When engine is running specification range is indicated.
A/F ALPHA-B1 [%]		×	● The mean value of the air-fuel ratio feedback correction factor per cycle is indicated.	● When engine is running specification range is indicated. ● This data also includes the data for the air-fuel ratio learning control.

NOTE:
- Any monitored item that does not match the vehicle being diagnosed is deleted from the display automatically.

ACTIVE TEST MODE

Test Item

TEST ITEM	CONDITION	JUDGEMENT	CHECK ITEM (REMEDY)
FUEL INJECTION	● Engine: Return to the original trouble condition ● Change the amount of fuel injection using CONSULT-II.	If trouble symptom disappears, see CHECK ITEM.	● Harness and connectors ● Fuel injector ● Heated oxygen sensor 1
IGNITION TIMING	● Engine: Return to the original trouble condition ● Timing light: Set ● Retard the ignition timing using CONSULT-II.	If trouble symptom disappears, see CHECK ITEM.	● Perform Idle Air Volume Learning.
POWER BALANCE	● Engine: After warming up, idle the engine. ● A/C switch: OFF ● Shift lever: Neutral ● Cut off each fuel injector signal one at a time using CONSULT-II.	Engine runs rough or dies.	● Harness and connectors ● Compression ● Fuel injector ● Power transistor ● Spark plug ● Ignition coil
COOLING FAN*	● Ignition switch: ON ● Turn the cooling fan “HI”, “LOW” and “OFF” with CONSULT-II.	Cooling fan moves and stops.	● Harness and connectors ● Cooling fan relay ● Cooling fan motor
ENG COOLANT TEMP	● Engine: Return to the original trouble condition ● Change the engine coolant temperature using CONSULT-II.	If trouble symptom disappears, see CHECK ITEM.	● Harness and connectors ● Engine coolant temperature sensor ● Fuel injector
FUEL PUMP RELAY	● Ignition switch: ON (Engine stopped) ● Turn the fuel pump relay ON and OFF using CONSULT-II and listen to operating sound.	Fuel pump relay makes the operating sound.	● Harness and connectors ● Fuel pump relay

TEST ITEM	CONDITION	JUDGEMENT	CHECK ITEM (REMEDY)
PURG VOL CONT/V	● Engine: After warming up, run engine at 1,500 rpm. ● Change the EVAP canister purge volume control solenoid valve opening percent using CONSULT-II.	Engine speed changes according to the opening percent.	● Harness and connectors ● Solenoid valve
V/T ASSIGN ANGLE	● Engine: Return to the original trouble condition ● Change intake valve timing using CONSULT-II.	If trouble symptom disappears, see CHECK ITEM.	● Harness and connectors ● Intake valve timing control solenoid valve

*: Leaving cooling fan OFF with CONSULT-II while engine is running may cause the engine to overheat.

DTC & SRT CONFIRMATION MODE

SRT STATUS Mode

For details, refer to EC-51, "SYSTEM READINESS TEST (SRT) CODE" .

SRT Work Support Mode

This mode enables a technician to drive a vehicle to set the SRT while monitoring the SRT status.

DTC Work Support Mode

Test mode	Test item	Condition	Reference page
HO2S1	HO2S1 (B1) P0133	Refer to corresponding trouble diagnosis for DTC.	EC-185
	HO2S1 (B1) P0134		EC-195
	HO2S1 (B1) P1143		EC-310
	HO2S1 (B1) P1144		EC-316
HO2S2	HO2S2 (B1) P0139		EC-210
	HO2S2 (B1) P1146		EC-322
	HO2S2 (B1) P1147		EC-330

REAL TIME DIAGNOSIS IN DATA MONITOR MODE (RECORDING VEHICLE DATA)

Description

CONSULT-II has two kinds of triggers and they can be selected by touching “SETTING” in “DATA MONITOR” mode.

1. “AUTO TRIG” (Automatic trigger):
   - The malfunction will be identified on the CONSULT-II screen in real time.
     In other words, DTC/1st trip DTC and malfunction item will be displayed if the malfunction is detected by ECM.
     At the moment a malfunction is detected by ECM, “MONITOR” in “DATA MONITOR” screen is changed to “Recording Data ... xx%” as shown in the figure, and the data after the malfunction detection is recorded. Then when the percentage reached 100%, “REAL-TIME DIAG” screen is displayed. If “STOP” is touched on the screen during “Recording Data ... xx%”, “REAL-TIME DIAG” screen is also displayed.
     The recording time after the malfunction detection and the

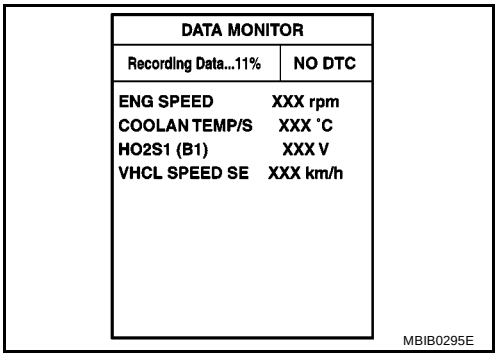

recording speed can be changed by “TRIGGER POINT” and “Recording Speed”. Refer to CONSULT-II OPERATION MANUAL.

2. “MANU TRIG” (Manual trigger):
   - DTC/1st trip DTC and malfunction item will not be displayed automatically on CONSULT-II screen even though a malfunction is detected by ECM.
     DATA MONITOR can be performed continuously even though a malfunction is detected.

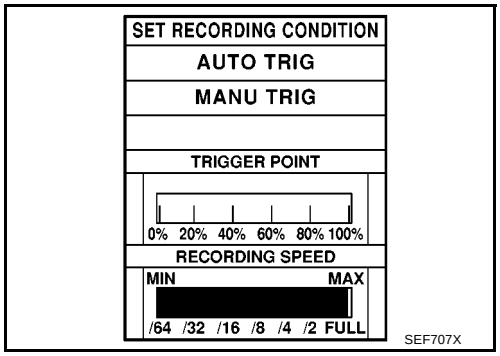

Operation

1. “AUTO TRIG”
   - While trying to detect the DTC/1st trip DTC by performing the DTC Confirmation Procedure, be sure to select to “DATA MONITOR (AUTO TRIG)” mode. You can confirm the malfunction at the moment it is detected.
   - While narrowing down the possible causes, CONSULT-II should be set in “DATA MONITOR (AUTO TRIG)” mode, especially in case the incident is intermittent.
     When you are inspecting the circuit by gently shaking (or twisting) the suspicious connectors, components and harness in the DTC Confirmation Procedure, the moment a malfunction is found the DTC/1st trip DTC will be displayed. (Refer to Incident Simulation Tests in GI-25, "How to Perform Efficient Diagnosis for an Electrical Incident" .)
2. “MANU TRIG”
   - If the malfunction is displayed as soon as “DATA MONITOR” is selected, reset CONSULT-II to “MANU TRIG”. By selecting “MANU TRIG” you can monitor and store the data. The data can be utilized for further diagnosis, such as a comparison with the value for the normal operating condition.

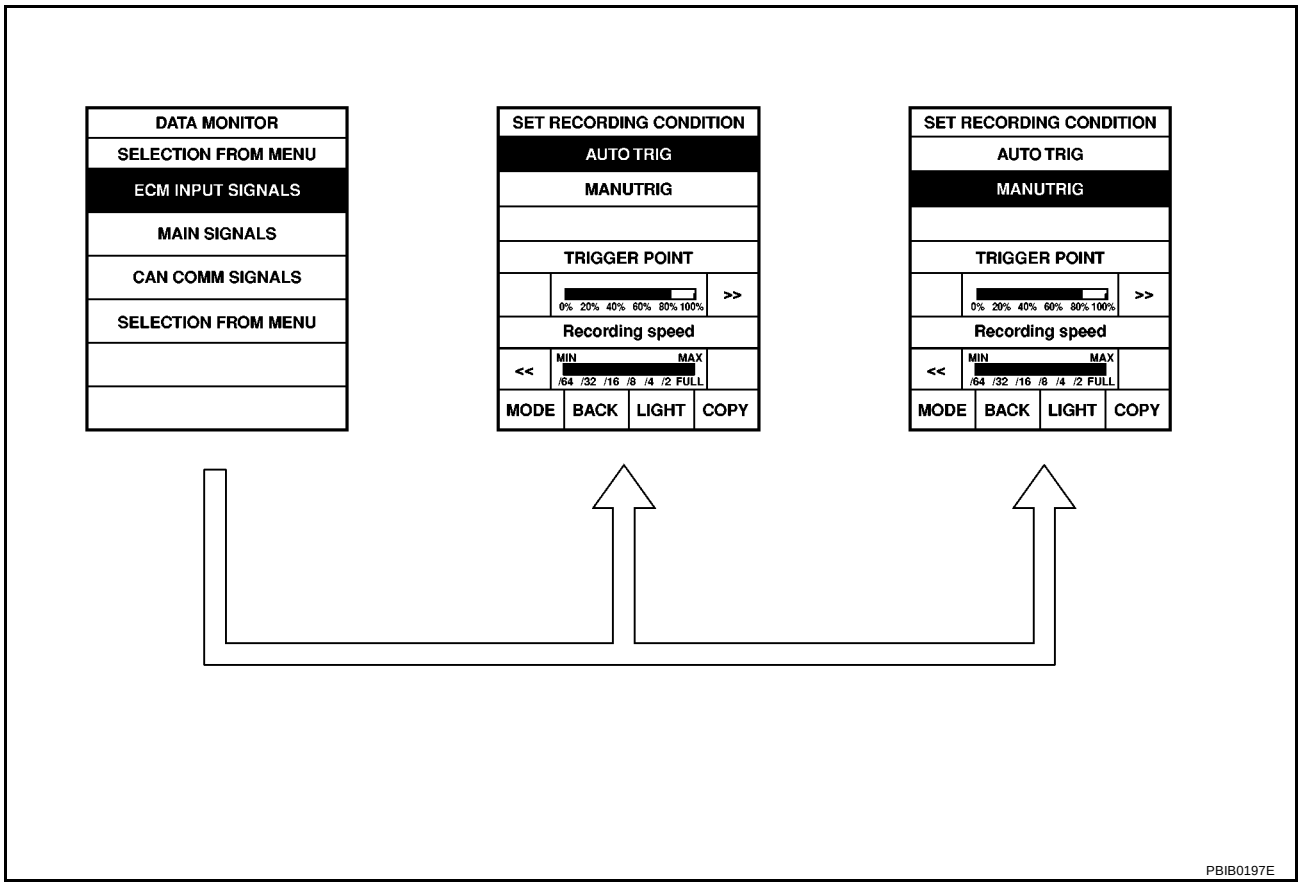

Generic Scan Tool (GST) Function

BBS002UB

DESCRIPTION

Generic Scan Tool (OBDII scan tool) complying with ISO 15031 has 8 different functions explained below.
ISO9141 is used as the protocol.
The name GST or Generic Scan Tool is used in this service manual.

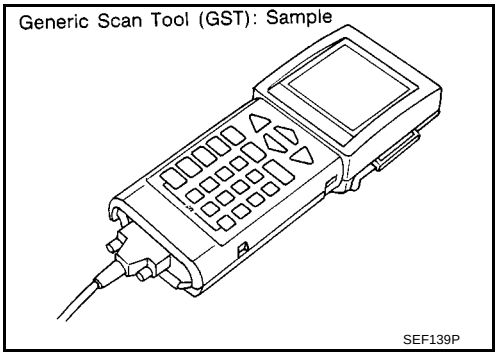

FUNCTION

Diagnostic test mode		Function
Service $01	READINESS TESTS	This diagnostic service gains access to current emission-related data values, including analog inputs and outputs, digital inputs and outputs, and system status information.
Service $02	(FREEZE DATA)	This diagnostic service gains access to emission-related data value which were stored by ECM during the freeze frame. For details, refer to EC-50, "FREEZE FRAME DATA AND 1ST TRIP FREEZE FRAME DATA" .
Service $03	DTCs	This diagnostic service gains access to emission-related power train trouble codes which were stored by ECM.
Service $04	CLEAR DIAG INFO	This diagnostic service can clear all emission-related diagnostic information. This includes: ● Clear number of diagnostic trouble codes (Service $01) ● Clear diagnostic trouble codes (Service $03) ● Clear trouble code for freeze frame data (Service $01) ● Clear freeze frame data (Service $02) ● Reset status of system monitoring test (Service $01) ● Clear on board monitoring test results (Service $06 and Service $07)
Service $06	(ON BOARD TESTS)	This diagnostic service accesses the results of on board diagnostic monitoring tests of specific components/systems that are not continuously monitored.
Service $07	(ON BOARD TESTS)	This diagnostic service enables the off board test drive to obtain test results for emission-related powertrain components/systems that are continuously monitored during normal driving conditions.
Service $08	—	This diagnostic service is not applicable on this vehicle.
Service $09	(CALIBRATION ID)	This diagnostic service enables the off-board test device to request specific vehicle information such as Vehicle Identification Number (VIN) and Calibration IDs.

INSPECTION PROCEDURE

1. Turn ignition switch OFF.
2. Connect GST to data link connector, which is located under drivers side dash panel near the fuse box cover.
3. Turn ignition switch ON.

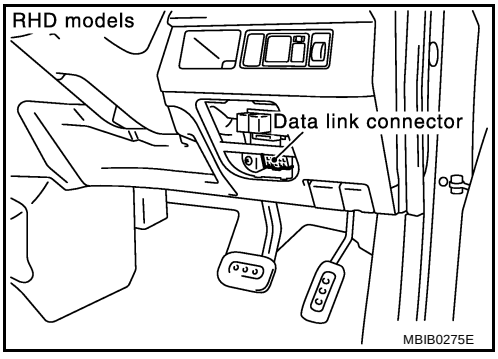

4. Enter the program according to instruction on the screen or in the operation manual.

(*: Regarding GST screens in this section, sample screens are shown.)

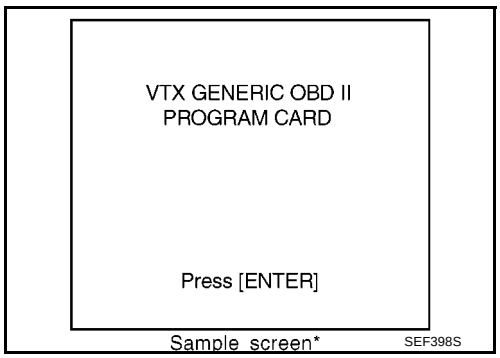

5. Perform each diagnostic mode according to each service procedure.

For further information, see the GST Operation Manual of the tool maker.

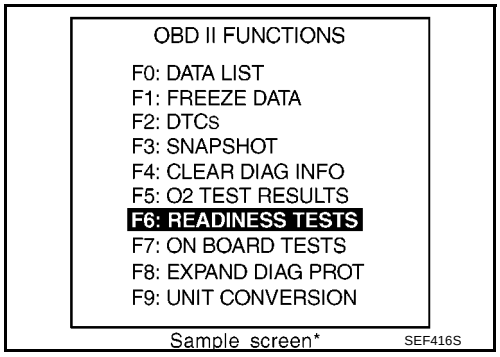

CONSULT-II Reference Value in Data Monitor Mode

BBS002UC

Remarks:
- Specification data are reference values.
- Specification data are output/input values which are detected or supplied by the ECM at the connector.
  * Specification data may not be directly related to their components signals/values/operations.

MONITOR ITEM	CONDITION		SPECIFICATION
ENG SPEED	● Run engine and compare CONSULT-II value with the tachometer indication.		Almost the same speed as the tachometer indication.
B/FUEL SCHDL	● See EC-117, "TROUBLE DIAGNOSIS - SPECIFICATION VALUE" .		
A/F ALPHA-B1	● See EC-117, "TROUBLE DIAGNOSIS - SPECIFICATION VALUE" .		
COOLAN TEMP/S	● Engine: After warming up		More than 70°C (158°F)
HO2S1 (B1)	● Engine: After warming up	Maintaining engine speed at 2,000 rpm	0 - 0.3V ←→ Approx. 0.6 - 1.0V
HO2S2 (B1)	● Revving engine from idle to 3,000 rpm quickly after the following conditions are met. – Engine: After warming up – Keeping the engine speed between 3,500 and 4,000 rpm for 1 minute and at idle for 1 minute under no load.		0 - 0.3V ←→ Approx. 0.6 - 1.0V
HO2S1 MNTR (B1)	● Engine: After warming up	Maintaining engine speed at 2,000 rpm	LEAN ←→ RICH Changes more than 5 times during 10 seconds.
HO2S2 MNTR (B1)	● Revving engine from idle to 3,000 rpm quickly after the following conditions are met. – Engine: After warming up – Keeping the engine speed between 3,500 and 4,000 rpm for 1 minute and at idle for 1 minute under no load.		LEAN ←→ RICH
VHCL SPEED SE	● Turn drive wheels and compare CONSULT-II value with the speedometer indication.		Almost the same speed as the speedometer indication.
BATTERY VOLT	● Ignition switch: ON (Engine stopped)		11 - 14V
ACCEL SEN 1	● Ignition switch: ON (Engine stopped)	Accelerator pedal: Fully released	0.6 - 0.9V
		Accelerator pedal: Fully depressed	4.0 - 4.8V

MONITOR ITEM	CONDITION		SPECIFICATION
ACCEL SEN 2*1	● Ignition switch: ON (Engine stopped)	Accelerator pedal: Fully released	0.6 - 0.9V
		Accelerator pedal: Fully depressed	3.9 - 4.8V
THRTL SEN 1 THRTL SEN 2*1	● Ignition switch: ON (Engine stopped) ● Shift lever: 1st	Accelerator pedal: Fully released	More than 0.36V
		Accelerator pedal: Fully depressed	Less than 4.75V
TURBO BST SEN	● Engine: After warming up ● Air conditioner switch: OFF ● Shift lever: Neutral ● No load	Idle	Approximately 1.5V
		2,500 rpm	Approximately 1.2V
START SIGNAL	● Ignition switch: ON → START → ON		OFF → ON → OFF
CLSD THL POS	● Ignition switch: ON (Engine stopped)	Accelerator pedal: Fully released	ON
		Accelerator pedal: Slightly depressed	OFF
AIR COND SIG	● Engine: After warming up, idle the engine	Air conditioner switch: OFF	OFF
		Air conditioner switch: ON (Compressor operates.)	ON
P/N POSI SW	● Ignition switch: ON	Shift lever: Neutral	ON
		Shift lever: Except above	OFF
PW/ST SIGNAL	● Engine: After warming up, idle the engine	Steering wheel: Not being turned.	OFF
		Steering wheel: Being turned.	ON
LOAD SIGNAL	● Ignition switch: ON	Rear window defogger switch is ON and/or lighting switch is in 2nd.	ON
		Rear window defogger switch is OFF and lighting switch is OFF.	OFF
IGNITION SW	● Ignition switch: ON → OFF → ON		ON → OFF → ON
HEATER FAN SW	● Engine: After warming up, idle the engine	Heater fan: Operating.	ON
		Heater fan: Not operating	OFF
BRAKE SW	● Ignition switch: ON	Brake pedal: Fully released	OFF
		Brake pedal: Slightly depressed	ON
INJ PULSE-B1	● Engine: After warming up ● Shift lever: Neutral ● Air conditioner switch: OFF ● No load	Idle	2.0 - 3.0 msec
		2,000 rpm	1.9 - 2.9 msec
IGN TIMING	● Engine: After warming up ● Shift lever: Neutral ● Air conditioner switch: OFF ● No load	Idle	0° - 10° BTDC
		2,000 rpm	25° - 45° BTDC
CAL/LD VALUE	● Engine: After warming up ● Shift lever: Neutral ● Air conditioner switch: OFF ● No load	Idle	10% - 35%
		2,500 rpm	10% - 35%
PURG VOL C/V	● Engine: After warming up ● Shift lever: Neutral ● Air conditioner switch: OFF ● No load	Idle	0%
		2,000 rpm	20 - 30%

MONITOR ITEM	CONDITION		SPECIFICATION
INT/V TIM (B1)	● Engine: After warming up ● Shift lever: Neutral ● Air conditioner switch: OFF ● No load	Idle	–5° - 5°CA
		2,000 rpm	Approx. 0° - 20°CA
INT/V SOL (B1)	● Engine: After warming up ● Shift lever: Neutral ● Air conditioner switch: OFF ● No load	Idle	0% - 2%
		2,000 rpm	Approx. 0% - 50%
AIR COND RLY	● Engine: After warming up, idle the engine	Air conditioner switch: OFF	OFF
		Air conditioner switch: ON (Compressor operates)	ON
FUEL PUMP RLY	● For 1 second after turning ignition switch ON ● Engine running or cranking		ON
	● Except above conditions		OFF
THRTL RELAY	● Ignition switch: ON		ON
COOLING FAN	● Engine: After warming up, idle the engine ● Air conditioner switch: OFF	Engine coolant temperature: 94°C (201°F) or less	OFF
		Engine coolant temperature: Between 95°C (203°F) and 104°C (210°F)	LOW*2
		Engine coolant temperature: 105°C (212°F) or more	HIGH*2
HO2S1 HTR (B1)	● Engine: After warming up ● Engine speed: Below 3,600 rpm		ON
	● Engine speed: Above 3,600 rpm		OFF
HO2S2 HTR (B1)	● Engine speed: Below 3,800 rpm after the following conditions are met. – Engine: After warming up – Keeping the engine speed between 3,500 and 4,000 rpm for 1 minute and at idle for 1 minute under no load.		ON
	● Engine speed: Above 3,800 rpm		OFF
TRVL AFTER MIL	● Ignition switch: ON	Vehicle has traveled after MI has turned ON.	0 - 65,535 km (0 - 40,723 mile)
O2SEN HTR DTY	● Engine coolant temperature when engine started: More than 80°C (176°F) ● Engine speed: Below 3,600 rpm		Approx. 50%
AC PRESS SEN	● Engine: Idle ● Both A/C switch and blower fan switch: ON (Compressor operates)		1.0 - 4.0V

*1 : Accelerator pedal position sensor 2 signal and throttle position sensor 2 signal are converted by ECM internally. Thus, they differ from ECM terminals voltage signal.
*2: Models without air conditioner, cooling fan operates only ON and OFF operation, but CONSULT-II display will change OFF, LOW and HI depends on engine coolant temperature.

Major Sensor Reference Graph in Data Monitor Mode

BBS002UD

The following are the major sensor reference graphs in “DATA MONITOR” mode.

CLSD THL POS, ACCEL SEN 1, THRTL SEN 1

Below is the data for “CLSD THL POS”, “ACCEL SEN 1” and “THRTL SEN 1” when depressing the accelerator pedal with the ignition switch ON and with shift lever in 1st position.
The signal of “ACCEL SEN 1” and “THRTL SEN 1” should rise gradually without any intermittent drop or rise after “CLSD THL POS” is changed from “ON” to “OFF”.

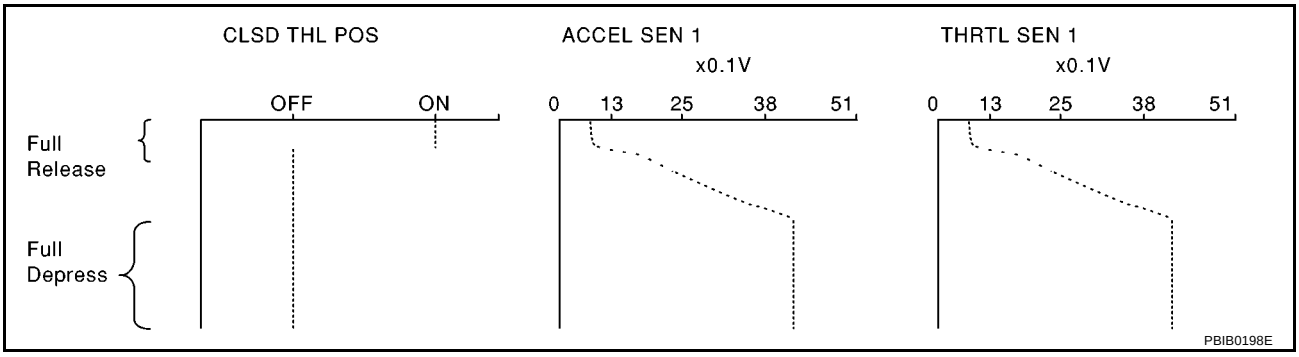

ENG SPEED, THRTL SEN 1, HO2S2 (B1), HO2S1 (B1), INJ PULSE-B1

Below is the data for “ENG SPEED”, “THRTL SEN 1”, “HO2S2 (B1)”, “HO2S1 (B1)” and “INJ PULSE-B1” when revving engine quickly up to 4,800 rpm under no load after warming up engine sufficiently.
Each value is for reference, the exact value may vary.

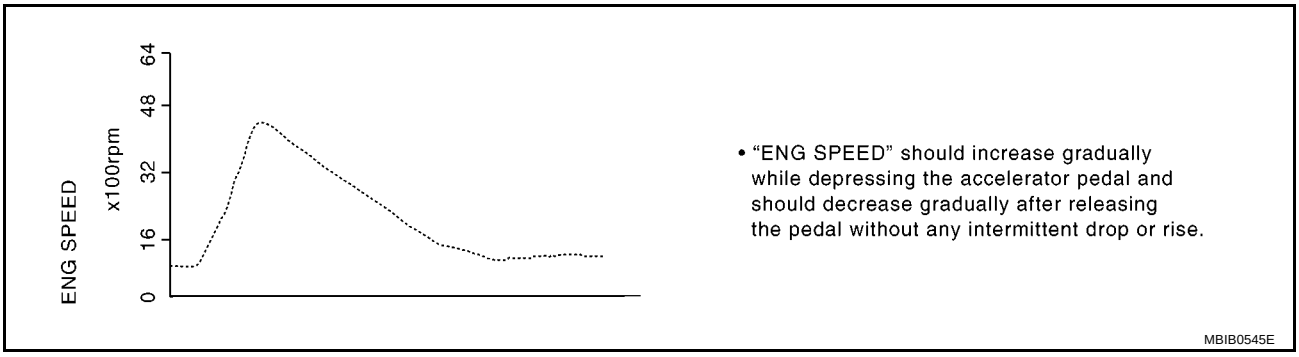

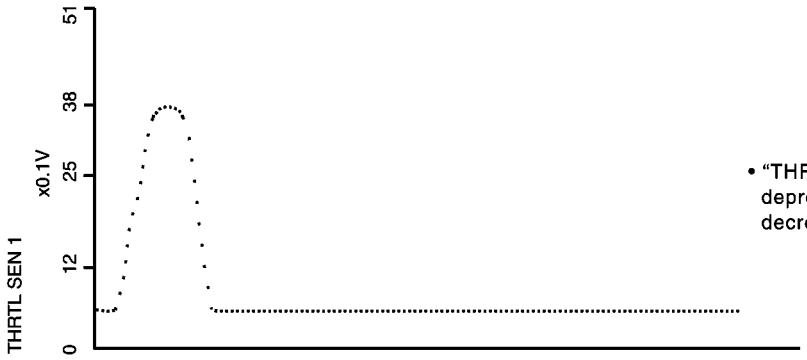

• "THRTL SEN 1" should increase while depressing the accelerator pedal and should decrease while releasing it.

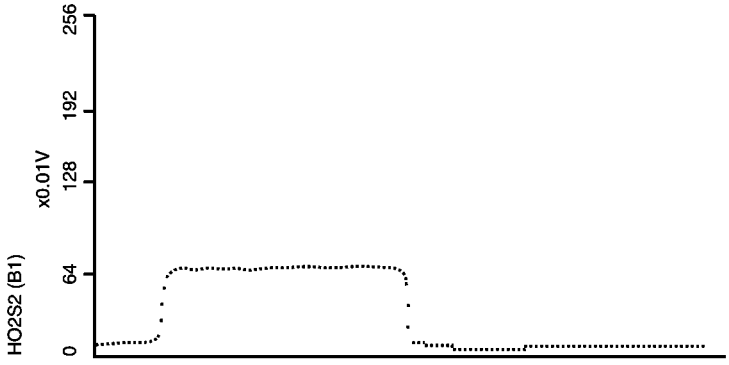

• "HO2S2 (B1)" may increase immediately after depressing the accelerator pedal and may decrease after releasing the pedal.

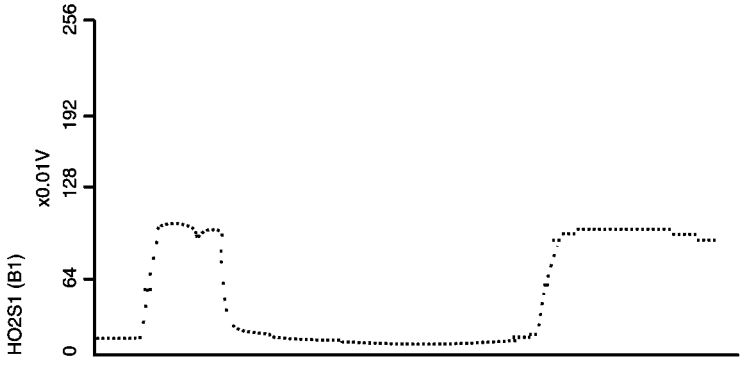

• "HO2S1 (B1)" may increase immediately after depressing the accelerator pedal and may decrease after releasing the pedal.

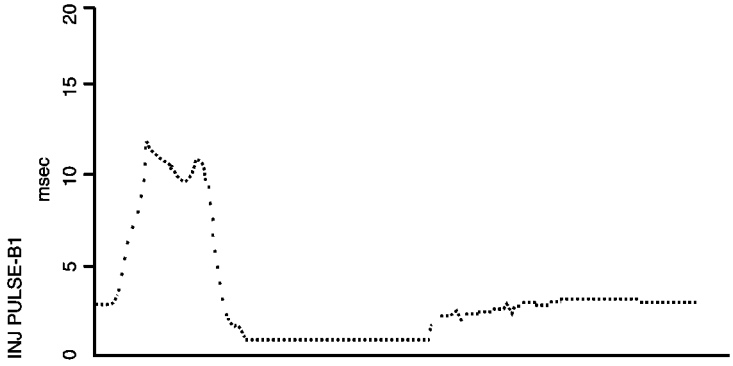

• "INJ PULSE-B1" should increase when depressing the accelerator pedal and should decrease when the pedal is released.

PBIB0668E

TROUBLE DIAGNOSIS - SPECIFICATION VALUE

PFP:00031

Description

BBS002UE

The specification (SP) value indicates the tolerance of the value that is displayed in “DATA MONITOR (SPEC)” mode of CONSULT-II during normal operation of the Engine Control System. When the value in “DATA MONITOR (SPEC)” mode is within the SP value, the Engine Control System is confirmed OK. When the value in “DATA MONITOR (SPEC)” mode is NOT within the SP value, the Engine Control System may have one or more malfunctions.
The SP value is used to detect malfunctions that may affect the Engine Control System, but will not light the MI.
The SP value will be displayed for the following three items:

- B/FUEL SCHDL (The fuel injection pulse width programmed into ECM prior to any learned on board correction)
- A/F ALPHA-B1 (The mean value of air-fuel ratio feedback correction factor per cycle)

Testing Condition

BBS002UF

- Vehicle driven distance: More than 5,000 km (3,107 miles)
- Barometric pressure: 98.3 - 104.3 kPa (0.983 - 1.043 bar, 1.003 - 1.064 kg/cm^2 , 14.25 - 15.12 psi)
- Atmospheric temperature: 20 - 30°C (68 - 86°F)
- Engine coolant temperature: 75 - 95°C (167 - 203°F)
- Engine speed: Idle
- Transmission: Warmed-up
  - After the engine is warmed up to normal operating temperature, drive vehicle for 5 minutes.
- Electrical load: Not applied
  - Rear window defogger switch, air conditioner switch, lighting switch are OFF. Steering wheel is straight ahead.

Inspection Procedure

BBS002UG

NOTE:
Perform “DATA MONITOR (SPEC)” mode in maximum scale display.

1. Perform EC-66, "Basic Inspection" .
2. Confirm that the testing conditions indicated above are met.
3. Select “B/FUEL SCHDL” and “A/F ALPHA-B1” in “DATA MONITOR (SPEC)” mode with CONSULT-II.
4. Make sure that monitor items are within the SP value.
5. If NG, go to EC-118, "Diagnostic Procedure" .

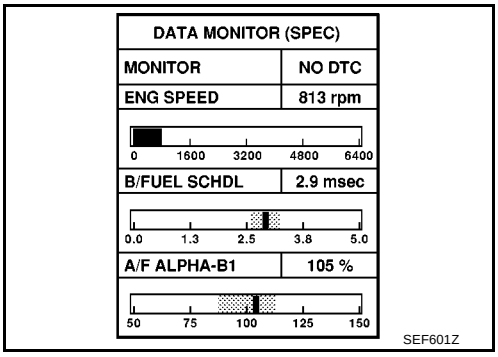

Diagnostic Procedure

BBS002UH

OVERALL SEQUENCE

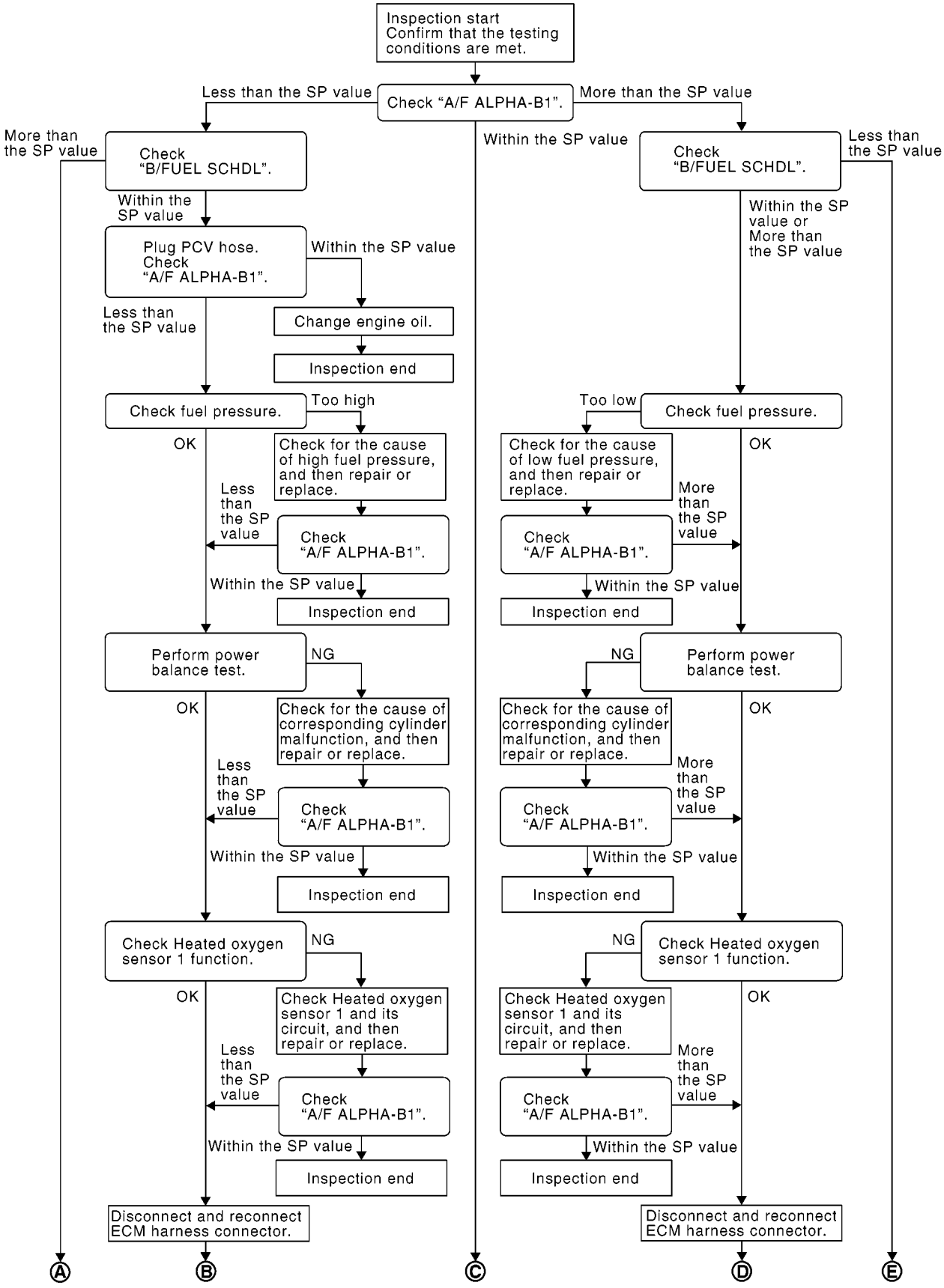

PBIB2384E

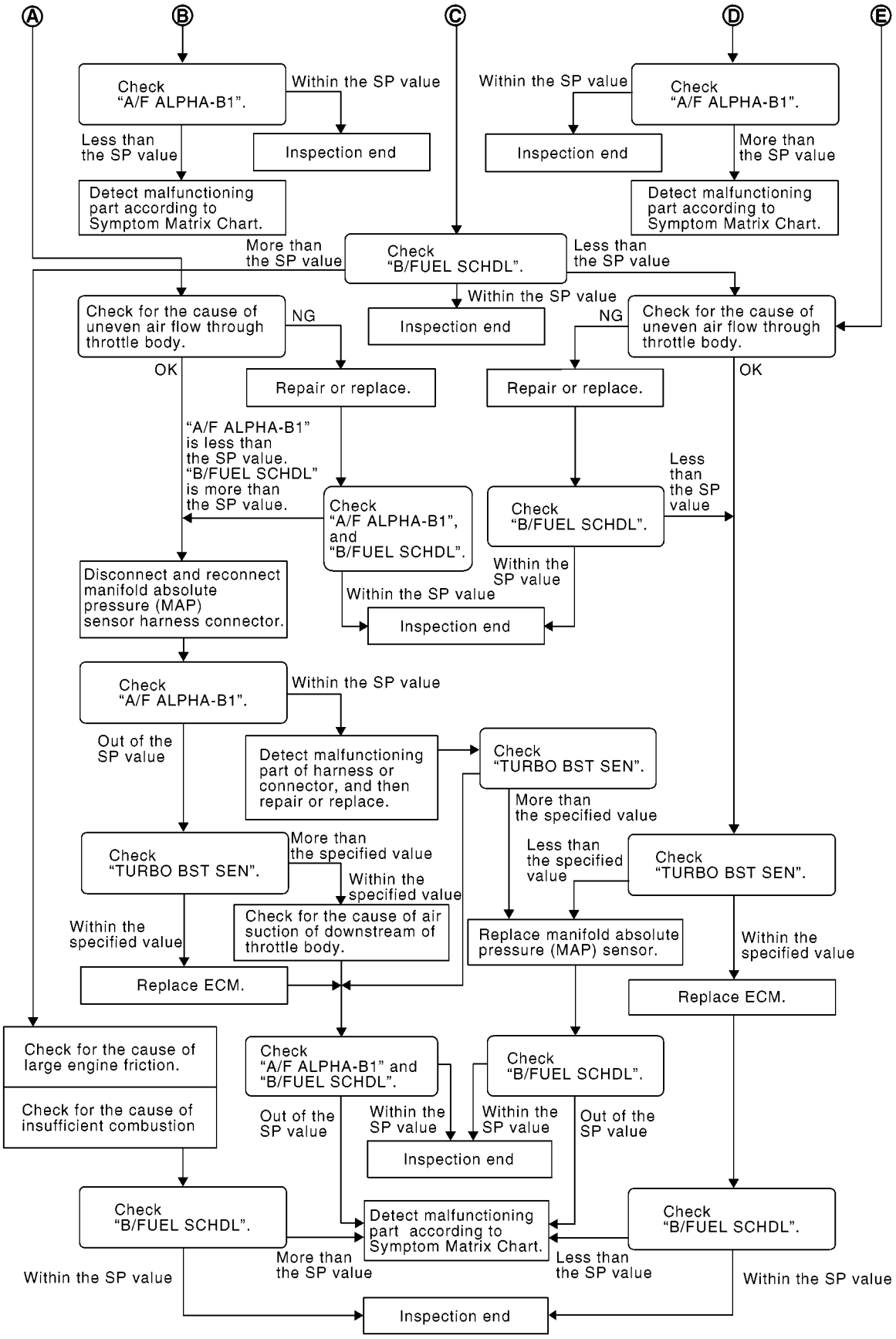
A
B
C
D
E
Check "A/F ALPHA-B1".
Within the SP value
Inspection end
Less than the SP value
Detect malfunctioning part according to Symptom Matrix Chart.
Check "A/F ALPHA-B1".
Within the SP value
Inspection end
More than the SP value
Detect malfunctioning part according to Symptom Matrix Chart.
More than the SP value
Check "B/FUEL SCHDL".
Less than the SP value
Within the SP value
Inspection end
Check for the cause of uneven air flow through throttle body.
NG
Repair or replace.
OK
Check for the cause of uneven air flow through throttle body.
NG
Repair or replace.
OK
"A/F ALPHA-B1" is less than the SP value. "B/FUEL SCHDL" is more than the SP value.
Check "A/F ALPHA-B1", and "B/FUEL SCHDL".
Check "B/FUEL SCHDL".
Less than the SP value
Within the SP value
Within the SP value
Inspection end
Disconnect and reconnect manifold absolute pressure (MAP) sensor harness connector.
Check "A/F ALPHA-B1".
Within the SP value
Out of the SP value
Detect malfunctioning part of harness or connector, and then repair or replace.
Check "TURBO BST SEN".
More than the specified value
Check "TURBO BST SEN".
More than the specified value
Within the specified value
Less than the specified value
Check "TURBO BST SEN".
Within the specified value
Check for the cause of air suction of downstream of throttle body.
Replace manifold absolute pressure (MAP) sensor.
Within the specified value
Replace ECM.
Replace ECM.
Check for the cause of large engine friction.
Check for the cause of insufficient combustion
Check "A/F ALPHA-B1" and "B/FUEL SCHDL".
Check "B/FUEL SCHDL".
Out of the SP value
Within the SP value
Within the SP value
Out of the SP value
Inspection end
Check "B/FUEL SCHDL".
Detect malfunctioning part according to Symptom Matrix Chart.
Check "B/FUEL SCHDL".
Within the SP value
More than the SP value
Less than the SP value
Within the SP value
Inspection end

MBIB1447E

DETAILED PROCEDURE

1. CHECK “A/F ALPHA-B1”

1. Start engine.
2. Confirm that the testing conditions are met. Refer to EC-117, "Testing Condition" .
3. Select “A/F ALPHA-B1” in “DATA MONITOR (SPEC)” mode, and make sure that the indication is within the SP value.

   NOTE:
   Check “A/F ALPHA-B1” for approximately 1 minute because they may fluctuate. It is NG if the indication is out of the SP value even a little.

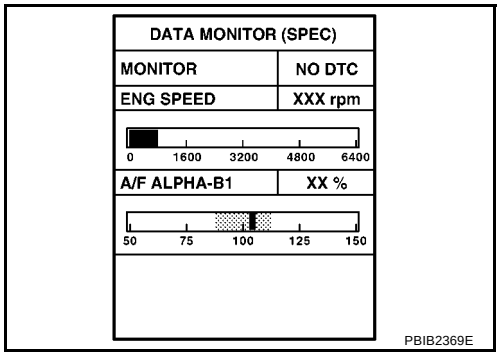

OK or NG

OK >> GO TO 17.
NG (Less than the SP value)>>GO TO 2.
NG (More than the SP value)>>GO TO 3.

2. CHECK “B/FUEL SCHDL”

Select “B/FUEL SCHDL” in “DATA MONITOR (SPEC)” mode, and make sure that the indication is within the SP value.

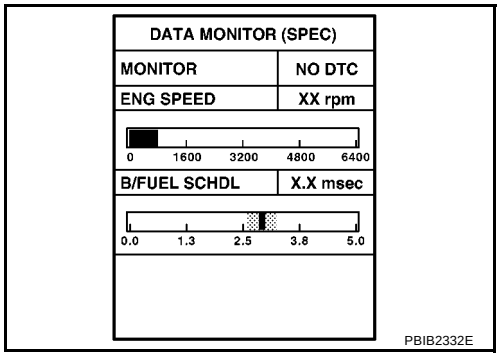

OK or NG

OK >> GO TO 4.
NG (More than the SP value)>>GO TO 19.

3. CHECK “B/FUEL SCHDL”

Select “B/FUEL SCHDL” in “DATA MONITOR (SPEC)” mode, and make sure that the indication is within the SP value.

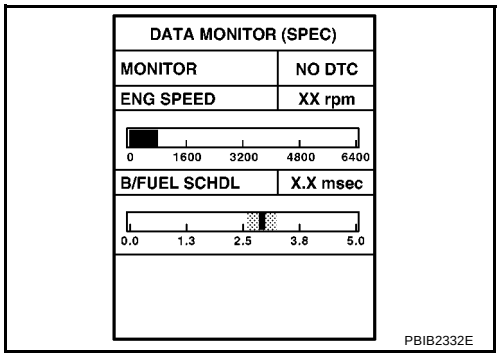

OK or NG

OK >> GO TO 6.
NG (More than the SP value)>>GO TO 6.
NG (Less than the SP value)>>GO TO 25.

4. CHECK “A/F ALPHA-B1”

1. Stop the engine.
2. Disconnect PCV hose, and then plug it.
3. Start engine.
4. Select “A/F ALPHA-B1” in “DATA MONITOR (SPEC)” mode, and make sure that the indication is within the SP value.

OK or NG

OK >> GO TO 5.
NG >> GO TO 6.

5. CHANGE ENGINE OIL

1. Stop the engine.
2. Change engine oil.

NOTE:
This symptom may occur when a large amount of gasoline is mixed with engine oil because of driving conditions (such as when engine oil temperature does not rise enough since a journey distance is too short during winter). The symptom will not be detected after changing engine oil or changing driving condition.

>> **INSPECTION END**

6. CHECK FUEL PRESSURE

Check fuel pressure. (Refer to EC-71, "Fuel Pressure Check" .)

OK or NG

OK >> GO TO 9.
NG (Fuel pressure is too high)>>Replace fuel pressure regulator, refer to EC-71, "Fuel Pressure Check" . GO TO 8.
NG (Fuel pressure is too low)>>GO TO 7.

7. DETECT MALFUNCTIONING PART

1. Check the following.
- Clogged and bent fuel hose and fuel tube
- Clogged fuel filter
- Fuel pump and its circuit (Refer to EC-427, "FUEL PUMP" .)
2. If NG, repair or replace the malfunctioning part. (Refer to EC-71, "Fuel Pressure Check" .)
If OK, replace fuel pressure regulator.

>> GO TO 8.

8. CHECK “A/F ALPHA-B1”

1. Start engine.
2. Select “A/F ALPHA-B1” in “DATA MONITOR (SPEC)” mode, and make sure that the indication is within the SP value.

OK or NG

OK >> **INSPECTION END**
NG >> GO TO 9.

9. PERFORM POWER BALANCE TEST

1. Perform “POWER BALANCE” in “ACTIVE TEST” mode.
2. Make sure that the each cylinder produces a momentary engine speed drop.

OK or NG

OK >> GO TO 12.
NG >> GO TO 10.

ACTIVE TEST	
POWER BALANCE	
MONITOR	
ENG SPEED	XXX rpm
MAS A/F SE-B1	XXX V

PBIB0133E

10. DETECT MALFUNCTIONING PART

1. Check the following.
- Ignition coil and its circuit (Refer to EC-433, "IGNITION SIGNAL" .)
- Fuel injector and its circuit (Refer to EC-421, "FUEL INJECTOR" .)
- Intake air leakage
- Low compression pressure (Refer to EM-60, "COMPRESSION PRESSURE INSPECTION" .)
2. If NG, repair or replace the malfunctioning part.
   If OK, replace fuel injector. (It may be caused by leakage from fuel injector or clogging.)

>> GO TO 11.

11. CHECK “A/F ALPHA-B1”

1. Start engine.
2. Select “A/F ALPHA-B1” in “DATA MONITOR (SPEC)” mode, and make sure that the indication is within the SP value.

OK or NG

OK >> **INSPECTION END**
NG >> GO TO 12.

12. CHECK HEATED OXYGEN SENSOR 1 FUNCTION

1. Run engine at about 2,000 rpm for about 2 minutes under no load.
2. Select “HO2S1 MNTR (B1)”, in “DATA MONITOR” mode.
3. Running engine at 2,000 rpm under no load (The engine is warmed up to normal operating temperature.), check that the monitor fluctuates between LEAN and RICH more than 5 times during 10 seconds.

   1 time : RICH → LEAN → RICH

   2 times : RICH → LEAN → RICH → LEAN → RICH

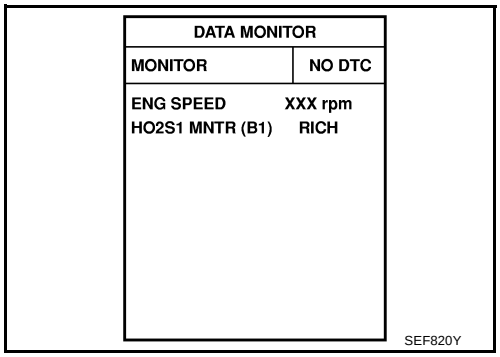

OK or NG

OK >> GO TO 15.
NG >> GO TO 13.

13. CHECK HEATED OXYGEN SENSOR 1 CIRCUIT

Check heated oxygen sensor 1 and its circuit. Refer to EC-178, "DTC P0132 HO2S1" .

>> GO TO 14.

14. CHECK “A/F ALPHA-B1”

1. Start engine.
2. Select “A/F ALPHA-B1” in “DATA MONITOR (SPEC)” mode, and make sure that the indication is within the SP value.

OK or NG

OK >> **INSPECTION END**
NG >> GO TO 15.

15. DISCONNECT AND RECONNECT ECM HARNESS CONNECTOR

1. Stop the engine.
2. Disconnect ECM harness connector. Check pin terminal and connector for damage, and then reconnect it.

>> GO TO 16.

16. CHECK “A/F ALPHA-B1”

1. Start engine.
2. Select “A/F ALPHA-B1” in “DATA MONITOR (SPEC)” mode, and make sure that the indication is within the SP value.

OK or NG

OK >> **INSPECTION END**
NG >> Detect malfunctioning part according to EC-82, "Symptom Matrix Chart" .

17. CHECK “B/FUEL SCHDL”

Select “B/FUEL SCHDL” in “DATA MONITOR (SPEC)” mode, and make sure that the indication is within the SP value.

OK or NG

OK >> **INSPECTION END**
NG (More than the SP value)>>GO TO 18.
NG (Less than the SP value)>>GO TO 27.

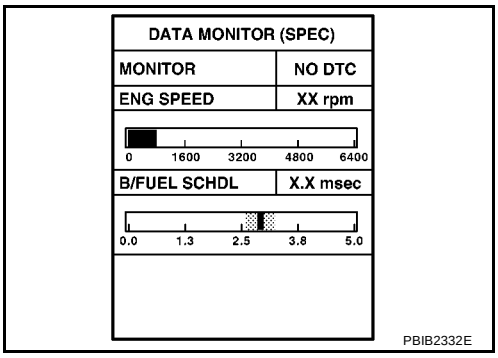

18. DETECT MALFUNCTIONING PART

1. Check for the cause of large engine friction. Refer to the following.
- Engine oil level too high
- Engine oil viscosity
- Belt tension of power steering, alternator, A/C compressor, etc. is excessive
- Noise from engine
- Noise from transmission, etc.
2. Check for the cause of insufficient combustion. Refer to the following.
- Valve clearance malfunction
- Intake valve timing control function malfunction
- Camshaft sprocket installation malfunction, etc.

>> Repair or replace malfunctioning part, and then GO TO 32.

19. CHECK INTAKE SYSTEM

Check for the cause of unsteady air flow passing through throttle body. Refer to the following.

- Crushed air ducts
- Malfunctioning seal of air cleaner element
- Uneven dirt of air cleaner element
- Improper specification of intake air system part

OK or NG

OK >> GO TO 21.
NG >> Repair or replace malfunctioning part, and then GO TO 20.

20. CHECK “A/F ALPHA-B1”, AND “B/FUEL SCHDL”

Select “A/F ALPHA-B1” and “B/FUEL SCHDL” in “DATA MONITOR (SPEC)” mode, and make sure that the indication is within the SP value.

OK or NG

OK >> **INSPECTION END**
NG (“B/FUEL SCHDL” is more, “A/F ALPHA-B1” is less than the SP value)>>GO TO 21.

21. DISCONNECT AND RECONNECT MANIFOLD ABSOLUTE PRESSURE (MAP) SENSOR HARNESS CONNECTOR

1. Stop the engine.
2. Disconnect manifold absolute pressure (MAP) sensor harness connector. Check pin terminal and connector for damage and then reconnect it again.

>> GO TO 22.

22. CHECK “A/F ALPHA-B1”

1. Start engine.
2. Select “A/F ALPHA-B1” in “DATA MONITOR (SPEC)” mode, and make sure that the indication is within the SP value.

OK or NG

OK >> 1. Detect malfunctioning part of manifold absolute pressure (MAP) sensor circuit and repair it. Refer to EC-155, "DTC P0107, P0108 MANIFOLD ABSOLUTE PRESSURE SENSOR" .
2. GO TO 26.

NG >> GO TO 23.

23. CHECK “TURBO BST SEN”

Select “TURBO BST SEN” in “DATA MONITOR” mode, and make sure that the indication is within the specified value as described below.

Idle: Approximately 1.5V

2,500 rpm: Approximately 1.2V

OK or NG

OK >> GO TO 25.
NG (More than the specified value)>>Replace manifold absolute pressure (MAP) sensor, and then GO TO 24.

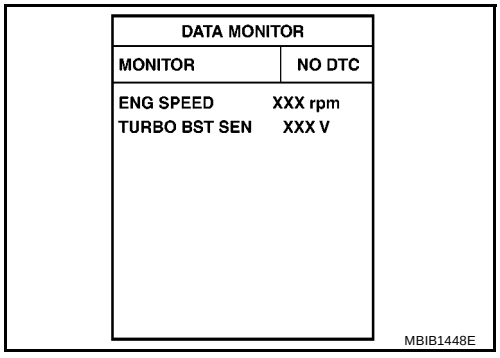

24. CHECK INTAKE SYSTEM

Check for the cause of air suction at downstream of throttle body. Refer to the following.

- Disconnection looseness, or cracks of air duct
- Looseness of oil filler cap
- Disconnection of oil level gauge
- Open sticking, breakage, hose disconnection, or cracks of blow-by gas control valve
- Disconnection or cracks of EVAP canister purge hose, open sticking of EVAP canister purge volume control valve
- Malfunctioning seal of rocker cover gasket
- Disconnection, looseness, or cracks of hoses, such as vacuum hose, connecting to intake air system parts.
- Malfunctioning seal of intake air system, etc.

>> GO TO 31.

25. REPLACE ECM

1. Replace ECM.
2. Perform initialization of NATS system and registration of all NATS ignition key IDs.
   Refer to BL-218, "ECM Re-communicating Function" .
3. Perform EC-69, "Accelerator Pedal Released Position Learning" .
4. Perform EC-69, "Throttle Valve Closed Position Learning" .
5. Perform EC-69, "Idle Air Volume Learning" .

>> GO TO 31.

26. CHECK “TURBO BST SEN”

Select “TURBO BST SEN” in “DATA MONITOR” mode, and make sure that the indication is within the specified value as described below.

Idle: Approximately 1.5V

2,500 rpm: Approximately 1.2V

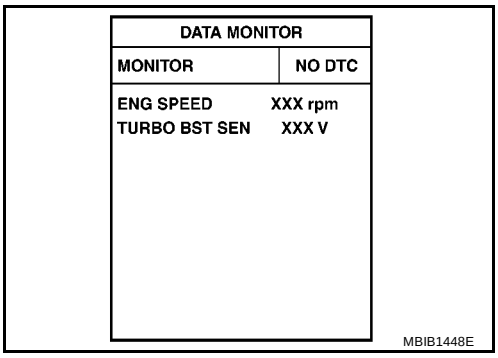

OK or NG

OK >> GO TO 31.

NG (More than the specified value)>>Replace manifold absolute pressure (MAP) sensor, and then GO TO 32.

27. CHECK INTAKE SYSTEM

Check for the cause of uneven air flow passing through throttle body. Refer to the following.

- Crushed air ducts
- Malfunctioning seal of air cleaner element
- Uneven dirt of air cleaner element
- Improper specification of intake air system

OK or NG

OK >> GO TO 29.

NG >> Repair or replace malfunctioning part, and then GO TO 28.

28. CHECK “B/FUEL SCHDL”

Select “B/FUEL SCHDL” in “DATA MONITOR (SPEC)” mode, and make sure that the indication is within the SP value.

OK or NG

OK >> **INSPECTION END**
NG (Less than the SP value)>>GO TO 29.

29. CHECK “TURBO BST SEN”

Select “TURBO BST SEN” in “DATA MONITOR” mode, and make sure that the indication is within the specified value as described below.

Idle: Approximately 1.5V

2,500 rpm: Approximately 1.2V

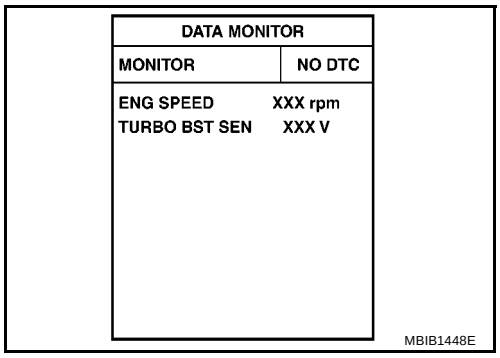

OK or NG

OK >> GO TO 30.
NG (Less than the specified value)>>Replace manifold absolute pressure (MAP) sensor, and then GO TO 32.

30. REPLACE ECM

1. Replace ECM.
2. Perform initialization of NATS system and registration of all NATS ignition key IDs.
   Refer to BL-218, "ECM Re-communicating Function" .
3. Perform EC-69, "Accelerator Pedal Released Position Learning" .
4. Perform EC-69, "Throttle Valve Closed Position Learning" .
5. Perform EC-69, "Idle Air Volume Learning" .

>> GO TO 32.

31. CHECK “A/F ALPHA-B1” AND “B/FUEL SCHDL”

Select “A/F ALPHA-B1” and “B/FUEL SCHDL” in “DATA MONITOR (SPEC)” mode, and make sure that the indication is within the SP value.

OK or NG

OK >> **INSPECTION END**
NG >> Detect malfunctioning part according to EC-82, "Symptom Matrix Chart" .

32. CHECK “B/FUEL SCHDL”

Select “B/FUEL SCHDL” in “DATA MONITOR (SPEC)” mode, and then make sure that the indication is within the SP value.

OK or NG

OK >> **INSPECTION END**
NG >> Detect malfunctioning part according to EC-82, "Symptom Matrix Chart" .

TROUBLE DIAGNOSIS FOR INTERMITTENT INCIDENT

PFP:00006

Description

BBS002UI

Intermittent incidents may occur. In many cases, the malfunction resolves itself (the part or circuit function returns to normal without intervention). It is important to realize that the symptoms described in the customer's complaint often do not recur on (1st trip) DTC visits. Realize also that the most frequent cause of intermittent incident occurrences is poor electrical connections. Because of this, the conditions under which the incident occurred may not be clear. Therefore, circuit checks made as part of the standard diagnostic procedure may not indicate the specific malfunctioning area.

Common Intermittent Incident Report Situations

STEP in Work Flow	Situation
2	The CONSULT-II is used. The SELF-DIAG RESULTS screen shows time data other than [0] or [1t].
3 or 4	The symptom described by the customer does not recur.
5	(1st trip) DTC does not appear during the DTC Confirmation Procedure.
10	The Diagnostic Procedure for PXXXX does not indicate the malfunctioning area.

Diagnostic Procedure

BBS002UJ

1. INSPECTION START

Erase (1st trip) DTCs. Refer to EC-57, "HOW TO ERASE EMISSION-RELATED DIAGNOSTIC INFORMATION" .

>> GO TO 2.

2. CHECK GROUND TERMINALS

Check ground terminals for corroding or loose connection.
Refer to EC-133, "Ground Inspection" .

OK or NG

OK >> GO TO 3.
NG >> Repair or replace.

3. SEARCH FOR ELECTRICAL INCIDENT

Perform GI-25, "How to Perform Efficient Diagnosis for an Electrical Incident" , “Incident Simulation Tests”.

OK or NG

OK >> **INSPECTION END**
NG >> Repair or replace.

POWER SUPPLY AND GROUND CIRCUIT

PFP:24110

Wiring Diagram

BBS002UK

EC-MAIN-01

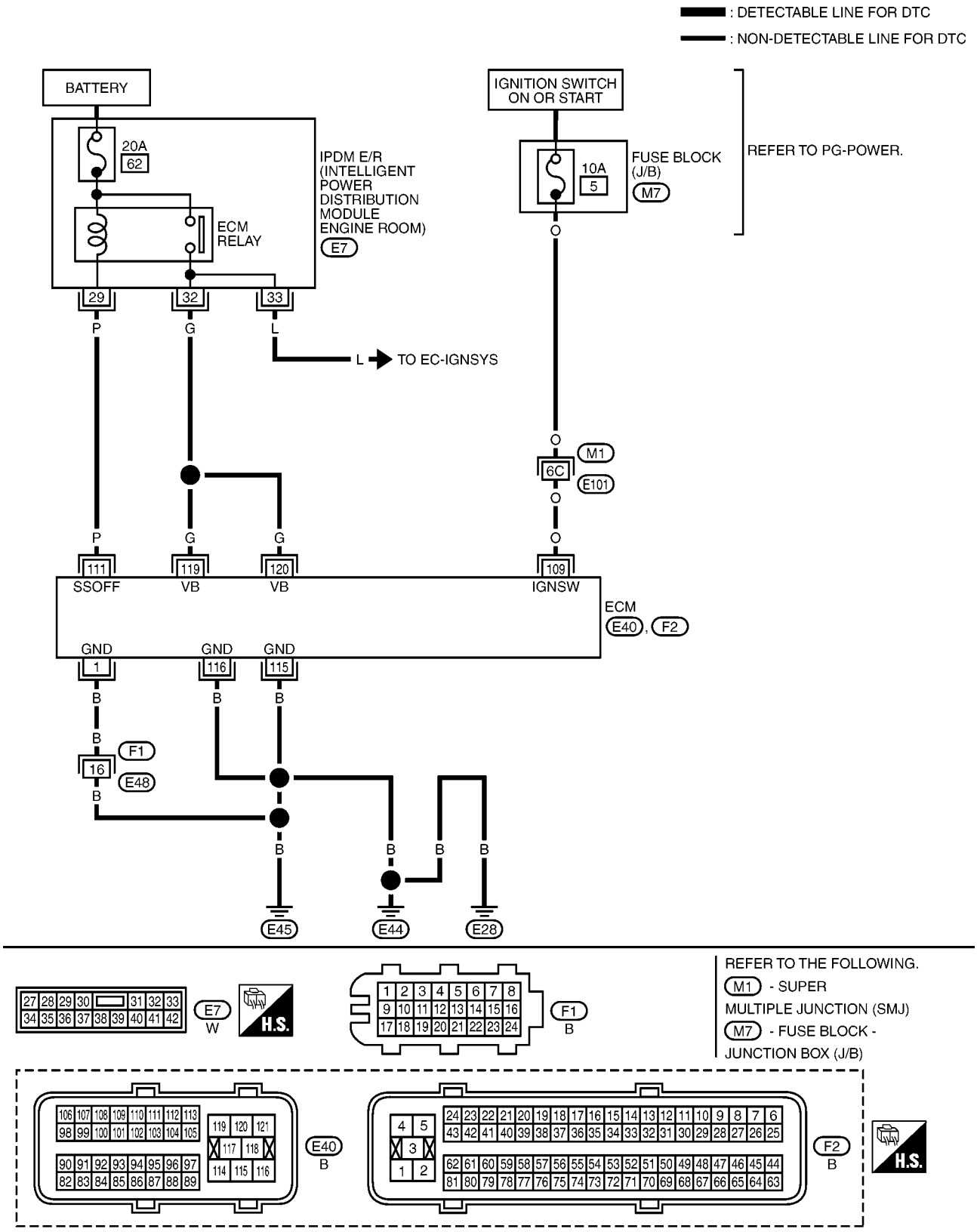

MBWA1502E

Specification data are reference values and are measured between each terminal and ground.

CAUTION:
Do not use ECM ground terminals when measuring input/output voltage. Doing so may result in damage to the ECM's transistor. Use a ground other than ECM terminals, such as the ground.

TERMINAL NO.	WIRE COLOR	ITEM	CONDITION	DATA (DC Voltage)
1 115 116	B B B	ECM ground	**[Engine is running]** ● Idle speed	Body ground
109	O	Ignition switch	**[Ignition switch: OFF]**	0V
			[Ignition switch: ON]	BATTERY VOLTAGE (11 - 14V)
111	P	ECM relay (Self shut-off)	**[Engine is running]** **[Ignition switch: OFF]** ● For a few seconds after turning ignition switch OFF	0 - 1.0V
			[Ignition switch: OFF] ● More than a few seconds passed after turning ignition switch OFF	BATTERY VOLTAGE (11 - 14V)
119 120	G G	Power supply for ECM	**[Ignition switch: ON]**	BATTERY VOLTAGE (11 - 14V)

Diagnostic Procedure

BBS002UL

1. INSPECTION START

Start engine.
Is engine running?

Yes or No

Yes >> GO TO 8.
No >> GO TO 2.

2. CHECK ECM POWER SUPPLY CIRCUIT-I

1. Turn ignition switch OFF and then ON.
2. Check voltage between ECM terminal 109 and ground with CONSULT-II or tester.

Voltage: Battery voltage

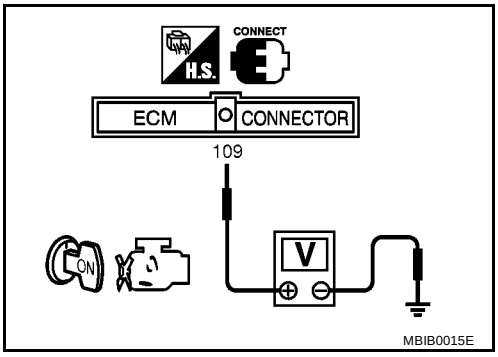

OK or NG

OK >> GO TO 4.
NG >> GO TO 3.

3. DETECT MALFUNCTIONING PART

Check the following.

- Harness connectors M1, E101
- Fuse block (J/B) connector M7
- 10A fuse
- Harness for open or short between ECM and fuse

>> Repair harness or connectors.

4. CHECK GROUND CONNECTIONS-I

1. Turn ignition switch OFF.
2. Loosen and retighten ground screws on the body. Refer to EC-133, "Ground Inspection" .

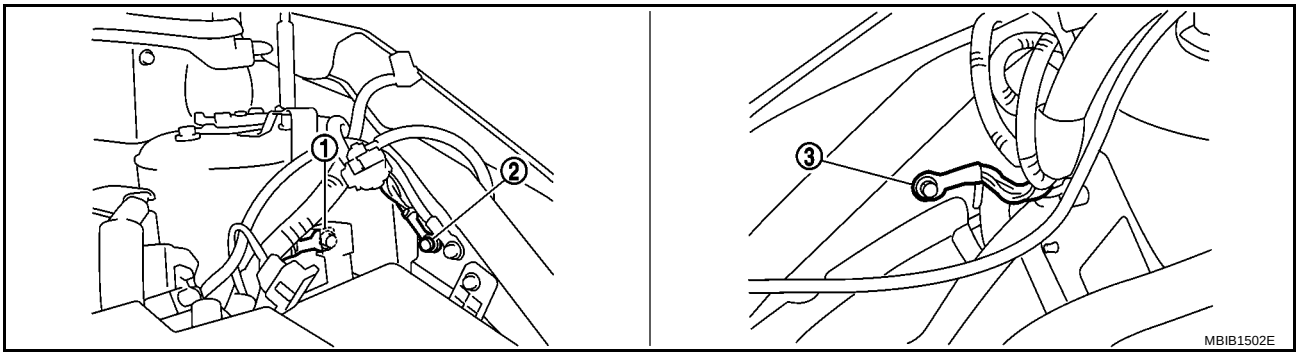

1. Body ground E44
2. Body ground E45
3. Body ground E28

OK or NG

OK >> GO TO 5.
NG >> Repair or replace ground connections.

5. CHECK ECM GROUND CIRCUIT FOR OPEN AND SHORT-I

1. Disconnect ECM harness connector.
2. Check harness continuity between ECM terminals 1, 115, 116 and ground.
   Refer to Wiring Diagram.

   Continuity should exist.

3. Also check harness for short to power.

OK or NG

OK >> GO TO 7.
NG >> GO TO 6.

6. DETECT MALFUNCTIONING PART

Check the following.

- Harness connectors F1, E48
- Harness for open or short between ECM and ground

>> Repair open circuit or short to power in harness or connectors.

7. CHECK ECM POWER SUPPLY CIRCUIT-II

1. Reconnect ECM harness connector.
2. Turn ignition switch ON.
3. Check voltage between IPDM E/R harness connector E7 terminal 33 and ground with CONSULT-II or tester.

   Voltage: Battery voltage

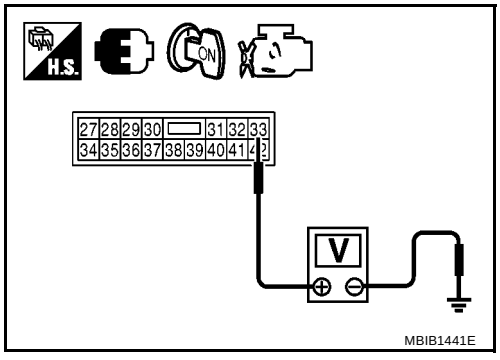

OK or NG

OK >> Go to EC-433, "IGNITION SIGNAL" .
NG >> GO TO 8.

8. CHECK ECM POWER SUPPLY CIRCUIT-III

1. Turn ignition switch ON and then OFF.
2. Check voltage between ECM terminals 119, 120 and ground with CONSULT-II or tester.

Voltage: After turning ignition switch OFF, battery voltage will exist for a few seconds, then drop approximately 0V.

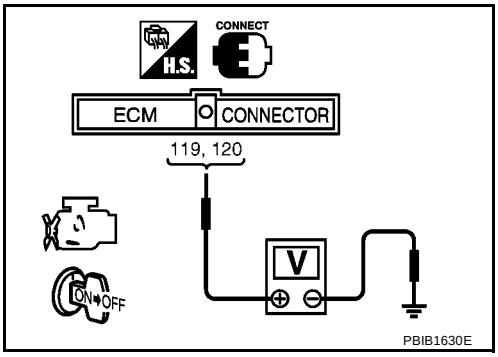

OK or NG

OK >> GO TO 13.
NG (Battery voltage does not exist.)>>GO TO 9.
NG (Battery voltage exists for more than a few seconds.)>>GO TO 11.

9. CHECK ECM POWER SUPPLY CIRCUIT-IV

1. Turn ignition switch OFF.
2. Check voltage between ECM terminal 111 and ground with CONSULT-II or tester.

Voltage: Battery voltage

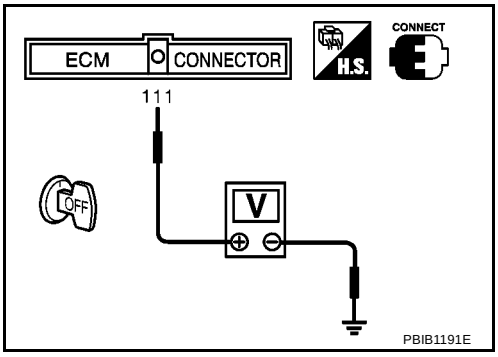

OK or NG

OK >> GO TO 10.
NG >> GO TO 11.

10. CHECK ECM POWER SUPPLY CIRCUIT-VI

1. Disconnect ECM harness connector.
2. Disconnect IPDM E/R harness connector.
3. Check harness continuity between ECM terminals 119, 120 and IPDM E/R terminal 32. Refer to Wiring Diagram.

Continuity should exist.

4. Also check harness for short to ground and short to power.

OK or NG

OK >> GO TO 13.
NG >> Repair open circuit or short to ground or short to power in harness or connectors.

11. CHECK ECM POWER SUPPLY CIRCUIT-VII

1. Disconnect ECM harness connector.
2. Disconnect IPDM E/R harness connector.
3. Check harness continuity between ECM terminal 111 and IPDM E/R terminal 29. Refer to Wiring Diagram.

Continuity should exist.

4. Also check harness for short to ground and short to power.

OK or NG

OK >> GO TO 12.
NG >> Repair open circuit or short to ground or short to power in harness or connectors.

12. CHECK 20A FUSE

1. Disconnect 20A fuse from IPDM E/R.
2. Check 20A fuse.

OK or NG

OK >> GO TO 16.
NG >> Replace 20A fuse.

13. CHECK GROUND CONNECTIONS-II

1. Loosen and retighten ground screws on the body.
   Refer to EC-133, "Ground Inspection" .

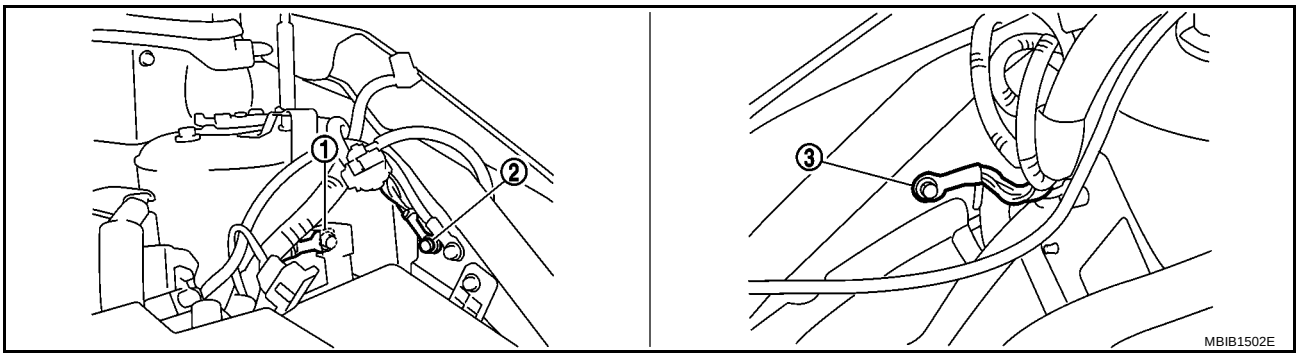

1. Body ground E44
2. Body ground E45
3. Body ground E28

OK or NG

OK >> GO TO 14.
NG >> Repair or replace ground connections.

14. CHECK ECM GROUND CIRCUIT FOR OPEN AND SHORT-II

1. Disconnect ECM harness connector.
2. Check harness continuity between ECM terminals 1, 115, 116 and ground.
   Refer to Wiring Diagram.

   Continuity should exist.

3. Also check harness for short to power.

OK or NG

OK >> GO TO 16.
NG >> GO TO 15.

15. DETECT MALFUNCTIONING PART

Check the following.

- Harness connectors F1, E48
- Harness for open or short between ECM and ground

>> Repair open circuit or short to power in harness or connectors.

16. CHECK INTERMITTENT INCIDENT

Refer to EC-127, "TROUBLE DIAGNOSIS FOR INTERMITTENT INCIDENT" .

OK or NG

OK >> Replace IPDM E/R. PG-18, "IPDM E/R (INTELLIGENT POWER DISTRIBUTION MODULE ENGINE ROOM)" .
NG >> Repair open circuit or short to power in harness or connectors.

Ground Inspection

BBS002UM

Ground connections are very important to the proper operation of electrical and electronic circuits. Ground connections are often exposed to moisture, dirt and other corrosive elements. The corrosion (rust) can become an unwanted resistance. This unwanted resistance can change the way a circuit works.
Electronically controlled circuits are very sensitive to proper grounding. A loose or corroded ground can drastically affect an electronically controlled circuit. A poor or corroded ground can easily affect the circuit. Even when the ground connection looks clean, there can be a thin film of rust on the surface.
When inspecting a ground connection follow these rules:

- Remove the ground bolt or screw.
- Inspect all mating surfaces for tarnish, dirt, rust, etc.
- Clean as required to assure good contact.
- Reinstall bolt or screw securely.
- Inspect for “add-on” accessories which may be interfering with the ground circuit.
- If several wires are crimped into one ground eyelet terminal, check for proper crimps. Make sure all of the wires are clean, securely fastened and providing a good ground path. If multiple wires are cased in one eyelet make sure no ground wires have excess wire insulation.

For detailed ground distribution information, refer to PG-38, "Ground Distribution" .

Ground Inspection

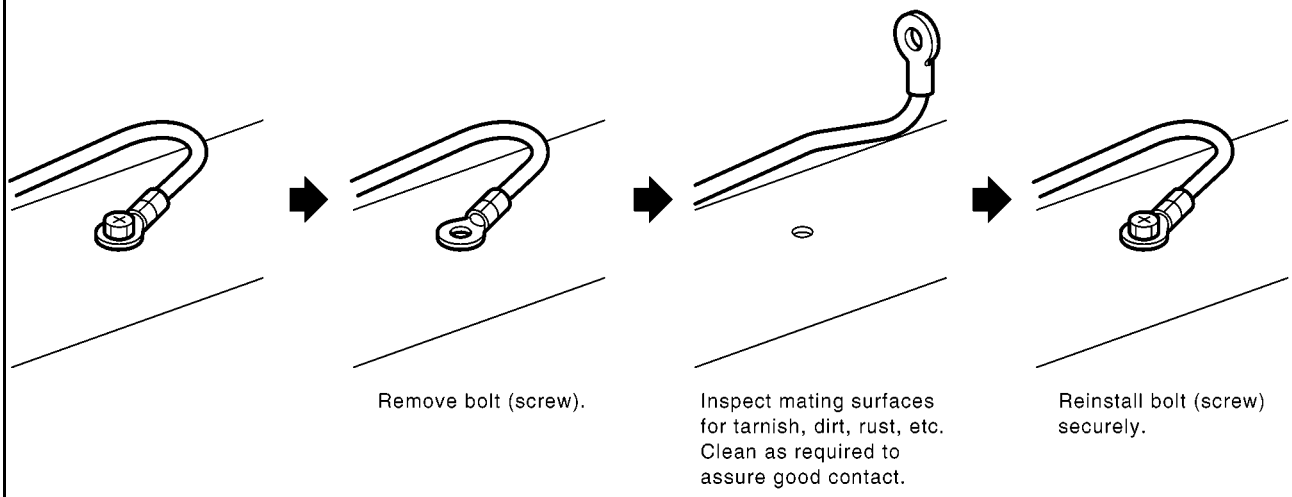

DTC U1001 CAN COMMUNICATION LINE

PFP:23710

Description

BBS002UN

CAN (Controller Area Network) is a serial communication line for real time application. It is an on-vehicle multiplex communication line with high data communication speed and excellent error detection ability. Many electronic control units are equipped onto a vehicle, and each control unit shares information and links with other control units during operation (not independent). In CAN communication, control units are connected with 2 communication lines (CAN H line, CAN L line) allowing a high rate of information transmission with less wiring. Each control unit transmits/receives data but selectively reads required data only.

On Board Diagnosis Logic

BBS002UO

The MI will not light up for this self-diagnosis.

DTC No.	Trouble diagnosis name	DTC detecting condition	Possible cause
U1001 1001	CAN communication line	● ECM cannot communicate to other control units. ● ECM cannot communicate for more than the specified time.	● Harness or connectors (CAN communication line is open or shorted.)

DTC Confirmation Procedure

BBS002UP

1. Turn ignition switch ON and wait at least 3 seconds.
2. Select “DATA MONITOR” mode with CONSULT-II.
3. If 1st trip DTC or DTC is detected, go to EC-136, "Diagnostic Procedure" .

Wiring Diagram

BBS002UQ

EC-CAN-01

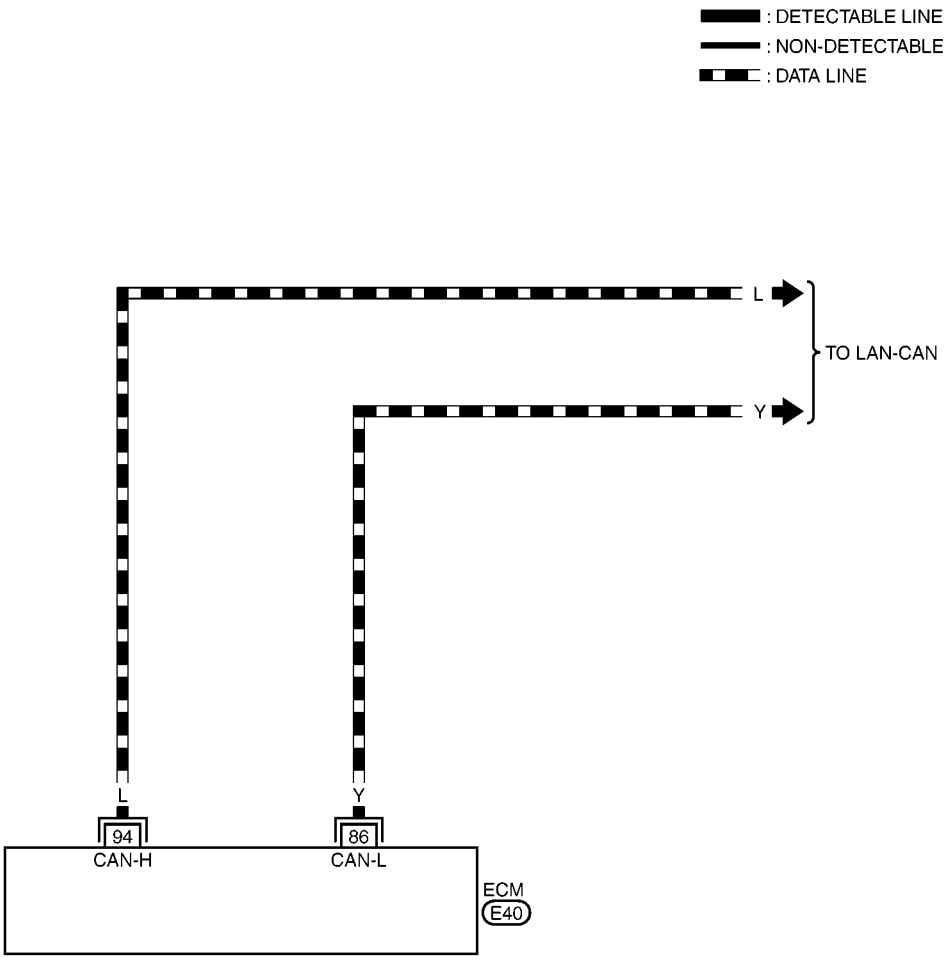

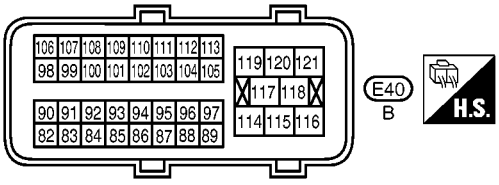

MBWA1503E

Diagnostic Procedure

BBS002UR

Go to LAN-3, "Precautions When Using CONSULT-II" .

DTC U1010 CAN COMMUNICATION

PFP:23710

Description

BBS003ZI

CAN (Controller Area Network) is a serial communication line for real time application. It is an on-vehicle multiplex communication line with high data communication speed and excellent error detection ability. Many electronic control units are equipped onto a vehicle, and each control unit shares information and links with other control units during operation (not independent). In CAN communication, control units are connected with 2 communication lines (CAN H line, CAN L line) allowing a high rate of information transmission with less wiring. Each control unit transmits/receives data but selectively reads required data only.

On Board Diagnosis Logic

BBS003ZJ

The MI will not light up for this diagnosis.

DTC No.	Trouble diagnosis name	DTC detecting condition	Possible cause
U1010 1010	CAN communication bus	Initializing CAN communication bus is malfunctioning.	● ECM

DTC Confirmation Procedure

BBS003ZK

WITH CONSULT-II

1. Turn ignition switch ON.
2. Select “DATA MONITOR” mode with CONSULT-II.
3. If 1st trip DTC is detected, go to EC-138, "Diagnostic Procedure"
.

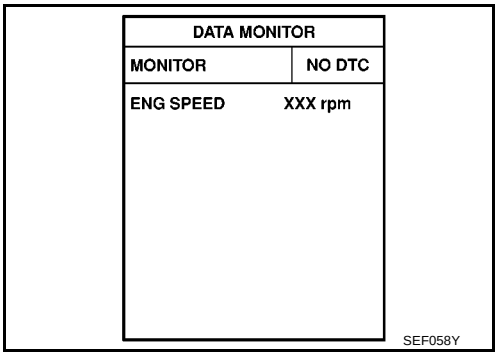

WITH GST

Follow the procedure “WITH CONSULT-II” above.

Diagnostic Procedure

BBS003ZL

1. INSPECTION START

With CONSULT-II

1. Turn ignition switch ON.
2. Select “SELF-DIAG RESULTS” mode with CONSULT-II.
3. Touch “ERASE”.
4. **Perform DTC Confirmation Procedure.**
   See EC-137, "DTC Confirmation Procedure" .
5. Is the DTC U1010 displayed again?

With GST

1. Turn ignition switch ON.
2. Select “Service $04” with GST.
3. **Perform DTC Confirmation Procedure.**
   See EC-137, "DTC Confirmation Procedure" .
4. Is the DTC U1010 displayed again?

Yes or No

Yes >> GO TO 2.
No >> **INSPECTION END**

2. REPLACE ECM

1. Replace ECM.
2. Perform initialization of NATS system and registration of all NATS ignition key IDs. Refer to BL-218, "ECM Re-communicating Function" .
3. Perform EC-69, "Accelerator Pedal Released Position Learning" .
4. Perform EC-69, "Throttle Valve Closed Position Learning" .
5. Perform EC-69, "Idle Air Volume Learning" .

>> **INSPECTION END**

DTC P0011 IVT CONTROL

PFP:23796

Description

BBS002US

SYSTEM DESCRIPTION

Sensor	Input Signal to ECM	ECM Function	Actuator
Crankshaft position sensor (POS)	Engine speed and piston position	Intake valve timing control	Intake valve timing control solenoid valve
Camshaft position sensor (PHASE)			
Engine coolant temperature sensor	Engine coolant temperature		
Wheel sensor	Vehicle speed*		

*: This signal is sent to the ECM through CAN communication line.

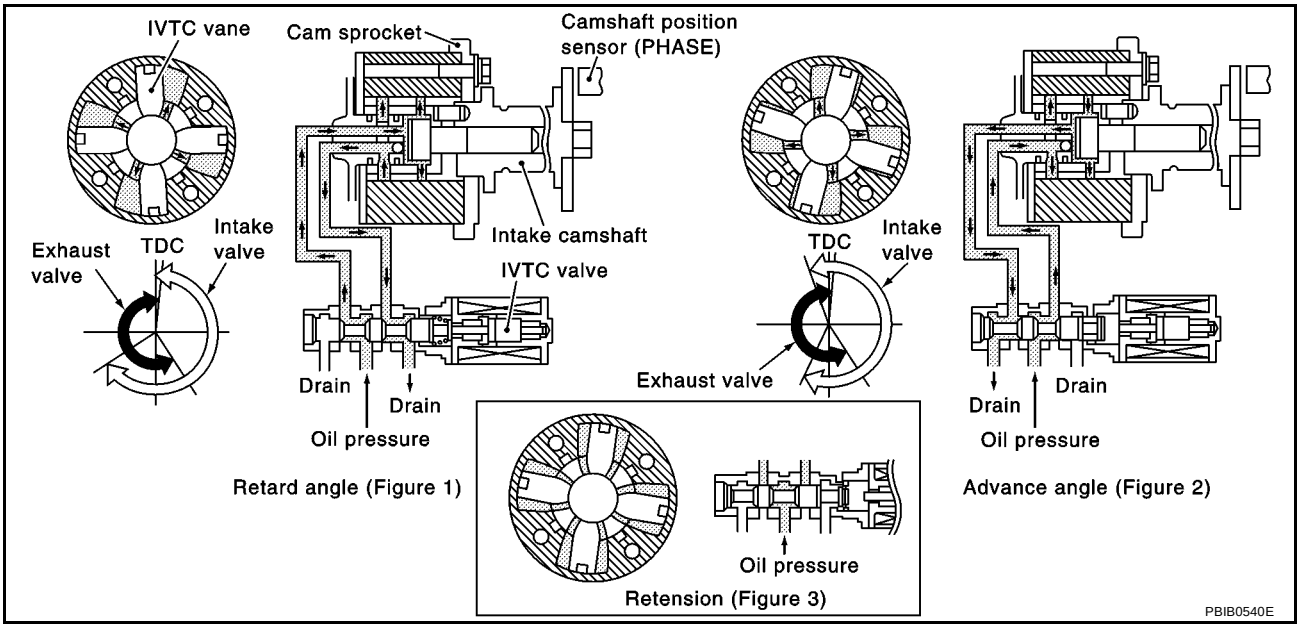

This mechanism hydraulically controls cam phases continuously with the fixed operating angle of the intake valve.

The ECM receives signals such as crankshaft position, camshaft position, engine speed, and engine coolant temperature. Then, the ECM sends ON/OFF pulse duty signals to the intake valve timing control solenoid valve depending on driving status. This makes it possible to control the shut/open timing of the intake valve to increase engine torque in low/mid speed range and output in high-speed range.

CONSULT-II Reference Value in Data Monitor Mode

BBS002UT

Specification data are reference values.

MONITOR ITEM	CONDITION		SPECIFICATION
INT/V TIM (B1)	● Engine: After warming up ● Shift lever: Neutral ● Air conditioner switch: OFF ● No load	Idle	–5° - 5°CA
		2,000 rpm	Approx. 0° - 20°CA
INT/V SOL (B1)	● Engine: After warming up ● Shift lever: Neutral ● Air conditioner switch: OFF ● No load	Idle	0% - 2%
		2,000 rpm	Approx. 0% - 50%

On Board Diagnosis Logic

BBS002UU

The MI will not light up for this self-diagnosis.

DTC No.	Trouble diagnosis name	Detecting condition	Possible cause
P0011 0011	Intake valve timing control performance	There is a gap between angle of target and phase-control angle degree.	● Crankshaft position sensor (POS) ● Camshaft position sensor (PHASE) ● Intake valve control solenoid valve ● Accumulation of debris to the signal pick-up portion of the camshaft ● Timing chain installation ● Foreign matter caught in the oil groove for intake valve timing control

FAIL-SAFE MODE

When the malfunction is detected, the ECM enters fail-safe mode.

Detected items	Engine operating condition in fail-safe mode
Intake valve timing control	The signal is not energized to the solenoid valve and the valve control does not function

DTC Confirmation Procedure

BBS002UV

CAUTION:
Always drive at a safe speed.

NOTE:

- **If DTC P0011 is displayed with DTC P1111, first perform trouble diagnosis for DTC P1111. See EC-286 .**
- If DTC Confirmation Procedure has been previously conducted, always turn ignition switch OFF and wait at least 10 seconds before conducting the next test.

TESTING CONDITION:
Before performing the following procedure, confirm that battery voltage is between 10V and 16V at idle.

WITH CONSULT-II

1. Turn ignition switch ON and select “DATA MONITOR” mode with CONSULT-II.
2. Start engine and warm it up to the normal operating temperature.
3. Maintain the following conditions from at least 6 consecutive seconds
   Hold the accelerator pedal as steady as possible

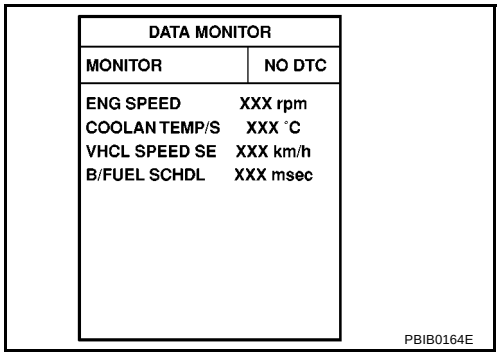

ENG SPEED	1,200 - 2,000 rpm (A constant rotation is maintained.)
COOLAN TEMP/S	60 - 120°C (140 - 248°F)
B/FUEL SCHDL	More than 3 msec
Shift lever	Neutral position

4. Let engine idle for 10 seconds.
5. If the 1st trip DTC is detected, go to EC-141, "Diagnostic Procedure" .
   If the 1st trip DTC is not detected, go to next step.
6. Maintain the following conditions for at least 20 consecutive seconds.

ENG SPEED	1,700 - 3,175 rpm (A constant rotation is maintained.)
COOLAN TEMP/S	70 - 105°C (176 - 194°F)
Shift lever	1st or 2nd position
Driving location uphill	Driving vehicle uphill (Increased engine load will help maintain the driving conditions required for this test.)

7. If 1st trip DTC is detected, go to EC-141, "Diagnostic Procedure" .

WITH GST

Follow the procedure “WITH CONSULT-II” above.

Diagnostic Procedure

BBS002UW

1. CHECK OIL PRESSURE WARNING LAMP

1. Start engine.
2. Check oil pressure warning lamp and confirm it is not illuminated.

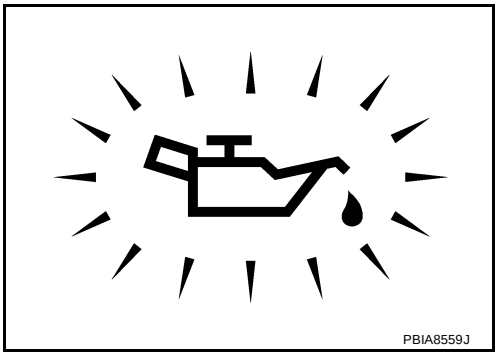

OK or NG

OK >> GO TO 2.
KG >> Go to LU-6, "OIL PRESSURE CHECK" .

2. CHECK INTAKE VALVE TIMING CONTROL SOLENOID VALVE

Refer to EC-142, "Component Inspection" .

OK or NG

OK >> GO TO 3.
NG >> Replace intake valve timing control solenoid valve.

3. CHECK CRANKSHAFT POSITION SENSOR (POS)

Refer to EC-256, "Component Inspection" .

OK or NG

OK >> GO TO 4.
NG >> Replace crankshaft position sensor (POS).

4. CHECK CAMSHAFT POSITION SENSOR (PHASE)

Refer to EC-263, "Component Inspection" .

OK or NG

OK >> GO TO 5.
NG >> Replace camshaft position sensor (PHASE).

5. CHECK CAMSHAFT (INTAKE)

Check the following.

- Accumulation of debris to the signal plate of camshaft rear end
- Chipping signal plate of camshaft rear end

OK or NG

OK >> GO TO 6.
NG >> Remove debris and clean the signal plate of camshaft rear end or replace camshaft.

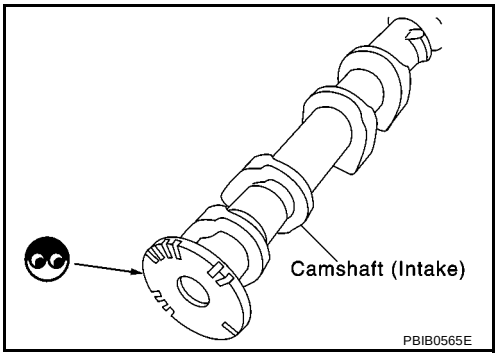

6. CHECK TIMING CHAIN INSTALLATION

Check service records for any recent repairs that may cause timing chain misaligned.
Are there any service records that may cause timing chain misaligned?

Yes or No

Yes >> Check timing chain installation. Refer to EM-50, "TIMING CHAIN" .
No >> GO TO 7.

7. CHECK LUBRICATION CIRCUIT

Refer to EM-47, "Inspection of Camshaft Sprocket (INT) Oil Groove" .

OK or NG

OK >> GO TO 8.
NG >> Clean lubrication line.

8. CHECK INTERMITTENT INCIDENT

Refer to EC-127, "TROUBLE DIAGNOSIS FOR INTERMITTENT INCIDENT" .
For Wiring Diagram, refer to EC-252 for CKP sensor (POS), EC-259 for CMP sensor (PHASE).

>> **INSPECTION END**

Component Inspection

BBS002UX

INTAKE VALVE TIMING CONTROL SOLENOID VALVE

1. Disconnect intake valve timing control solenoid valve harness connector.
2. Check resistance between intake valve timing control solenoid valve as follows.

Terminal	Resistance
1 and 2	6.7 - 7.7Ω at 20°C (68°F)
1 or 2 and ground	∞Ω (Continuity should not exist.)

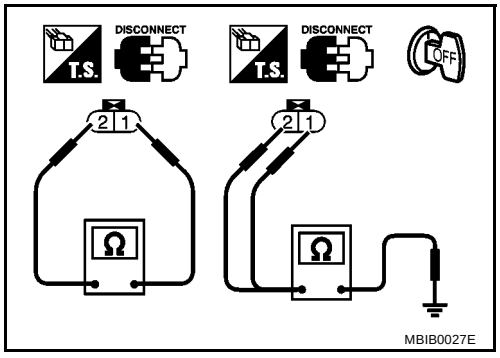

If NG, replace intake valve timing control solenoid valve.
If OK, go to next step.

3. Remove intake valve timing control solenoid valve.
4. Provide 12V DC between intake valve timing control solenoid valve terminals and then interrupt it. Make sure that the plunger moves as shown in the figure.

CAUTION:
Do not apply 12V DC continuously for 5 seconds or more. Doing so may result in damage to the coil in intake valve timing control solenoid valve.
If NG, replace intake valve timing control solenoid valve.

NOTE:
Always replace O-ring when intake valve timing control solenoid valve is removed.

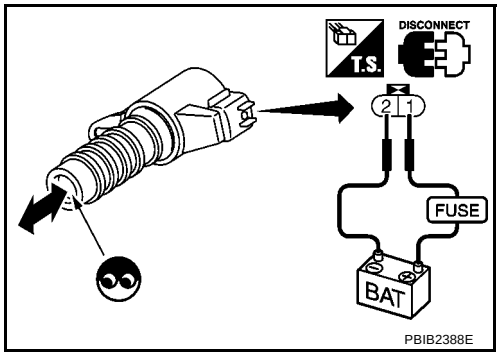

Removal and Installation

BBS002UY

INTAKE VALVE TIMING CONTROL SOLENOID VALVE

Refer to EM-35, "ROCKER COVER" .

DTC P0031, P0032 HO2S1 HEATER

PFP:22690

Description

BBS002UZ

SYSTEM DESCRIPTION

Sensor	Input Signal to ECM	ECM Function	Actuator
Camshaft position sensor (PHASE) Crankshaft position sensor (POS)	Engine speed	Heated oxygen sensor 1 heater control	Heated oxygen sensor 1 heater
Engine coolant temperature sensor	Engine coolant temperature		

The ECM performs ON/OFF duty control of the heated oxygen sensor 1 heater corresponding to the engine speed and engine coolant temperature. The duty percent varies with engine coolant temperature when engine is started.

OPERATION

Engine speed rpm	Heated oxygen sensor 1 heater
Above 3,600	OFF
Below 3,600 after warming up	ON

CONSULT-II Reference Value in Data Monitor Mode

BBS002V0

Specification data are reference values.

MONITOR ITEM	CONDITION	SPECIFICATION
HO2S1 HTR (B1)	● Engine: After warming up ● Engine speed: Below 3,600 rpm	ON
	● Engine speed: Above 3,600 rpm	OFF

On Board Diagnosis Logic

BBS002V1

DTC No.	Trouble diagnosis name	DTC detecting condition	Possible cause
P0031 0031	Heated oxygen sensor 1 heater control circuit low	The current amperage in the heated oxygen sensor 1 heater circuit is out of the normal range. (An excessively low voltage signal is sent to ECM through the heated oxygen sensor 1 heater.)	● Harness or connectors (The heated oxygen sensor 1 heater circuit is open or shorted.) ● Heated oxygen sensor 1 heater
P0032 0032	Heated oxygen sensor 1 heater control circuit high	The current amperage in the heated oxygen sensor 1 heater circuit is out of the normal range. (An excessively high voltage signal is sent to ECM through the heated oxygen sensor 1 heater.)	● Harness or connectors (The heated oxygen sensor 1 heater circuit is shorted.) ● Heated oxygen sensor 1 heater

DTC Confirmation Procedure

BBS002V2

NOTE:
If DTC Confirmation Procedure has been previously conducted, always turn ignition switch OFF and wait at least 10 seconds before conducting the next test.
TESTING CONDITION:
Before performing the following procedure, confirm that battery voltage is between 10.5V and 16V at idle.

WITH CONSULT-II

1. Start engine and warm it up to normal operating temperature.
2. Turn ignition switch OFF and wait at least 10 seconds.
3. Turn ignition switch ON and select “DATA MONITOR” mode with CONSULT-II.
4. Start engine and run it for at least 6 seconds at idle speed.
5. If 1st trip DTC is detected, go to EC-146, "Diagnostic Procedure"
.

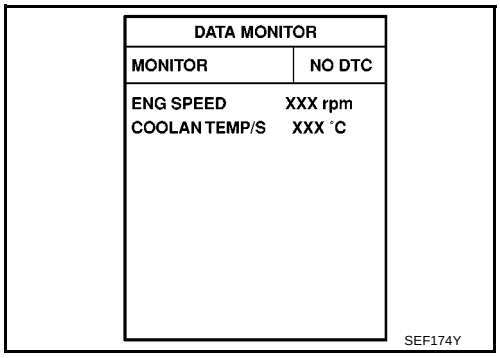

WITH GST

Follow the procedure “WITH CONSULT-II” above.

Wiring Diagram

BBS002V3

EC-HO2S1H-01

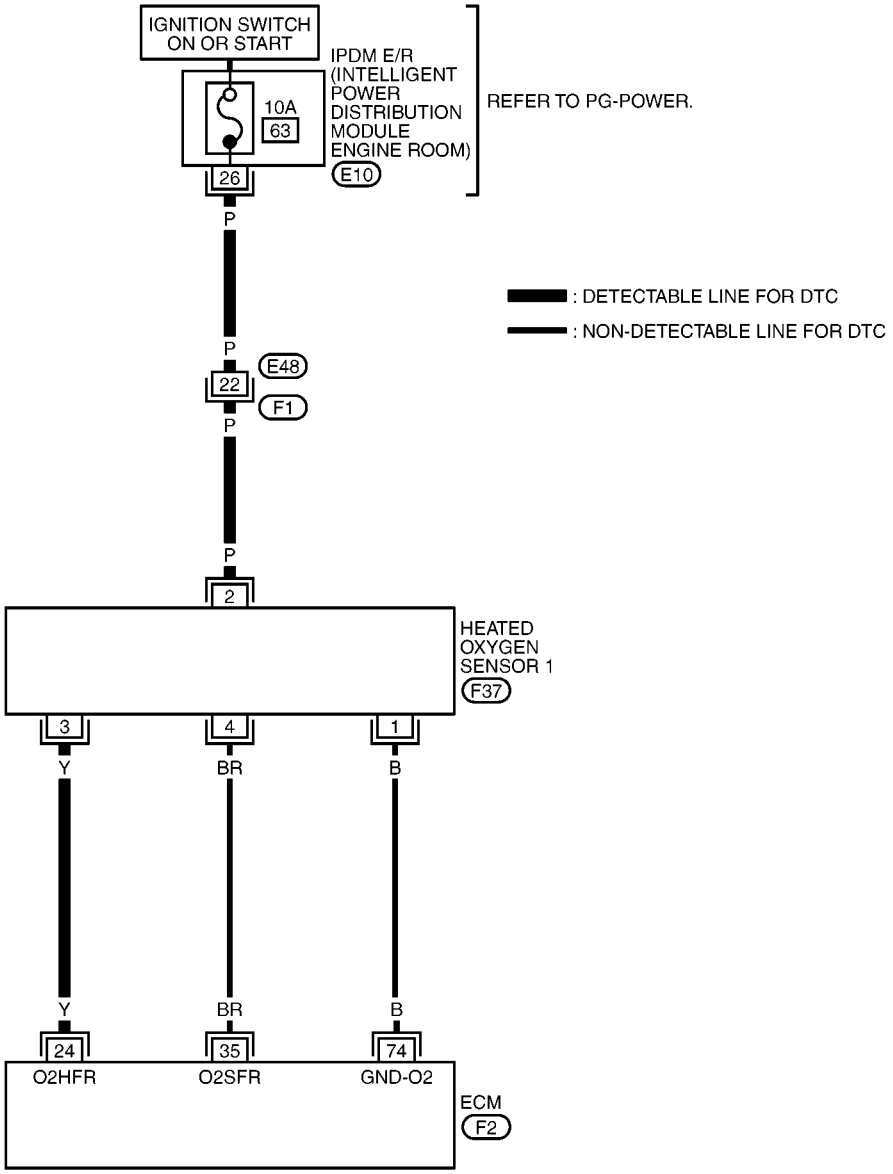

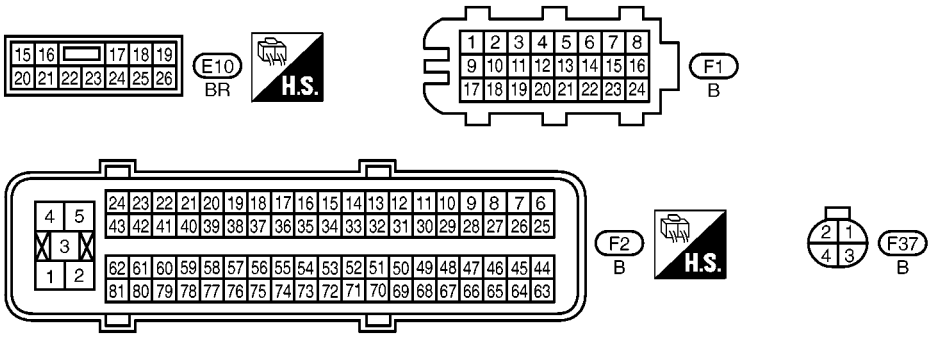

MBWA1504E

Specification data are reference values and are measured between each terminal and ground.
Pulse signal is measured by CONSULT-II.

CAUTION:

Do not use ECM ground terminals when measuring input/output voltage. Doing so may result in damage to the ECM's transistor. Use a ground other than ECM terminals, such as the ground.

TERMINAL NO.	WIRE COLOR	ITEM	CONDITION	DATA (DC Voltage)
24	Y	Heated oxygen sensor 1 heater	**[Engine is running]** ● **Warm-up condition.** ● Engine speed: Below 3,600 rpm	Approximately 7.0V★ 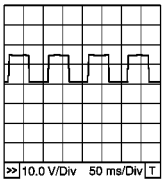 PBIB0519E
			[Engine is running] ● Engine speed: Above 3,600 rpm	BATTERY VOLTAGE (11 - 14V)
35	BR	Heated oxygen sensor 1	**[Engine is running]** ● **Warm-up condition** ● Engine speed: 2,000 rpm	0 - Approximately 1.0V (Periodically change)
74	B	Sensor ground (Heated oxygen sensor)	**[Engine is running]** ● **Warm-up condition** ● Idle speed	Approximately 0V

★: Average voltage for pulse signal (Actual pulse signal can be confirmed by oscilloscope.)

Diagnostic Procedure

BBS002V4

1. CHECK GROUND CONNECTIONS

1. Turn ignition switch OFF.
2. Loosen and retighten ground screws on the body.
   Refer to EC-133, "Ground Inspection" .

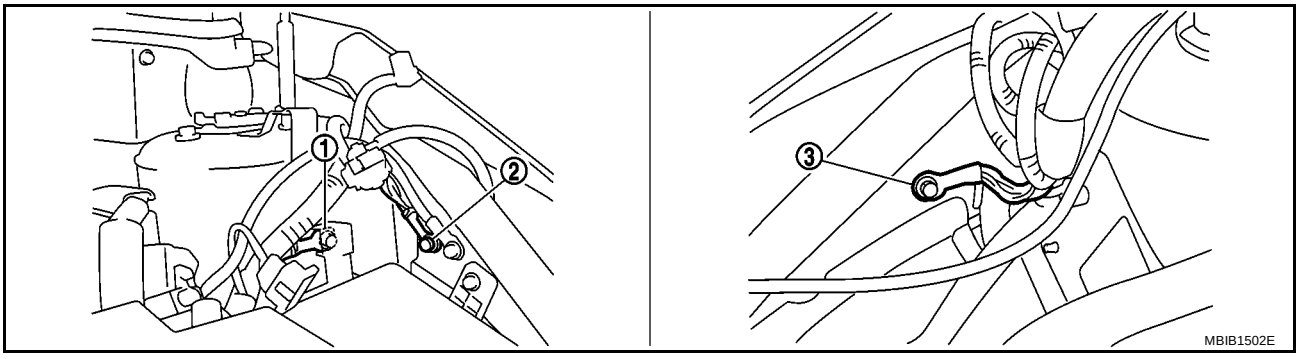

1. Body ground E44
2. Body ground E45
3. Body ground E28

OK or NG

OK >> GO TO 2.
NG >> Repair or replace ground connections.

2. CHECK HO2S1 POWER SUPPLY CIRCUIT

1. Disconnect heated oxygen sensor 1 harness connector.
2. Turn ignition switch ON.

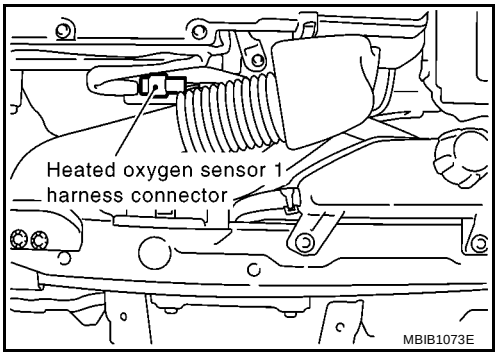

3. Check voltage between HO2S1 terminal 2 and ground with CONSULT-II or tester.

Voltage: Battery voltage

OK or NG

OK >> GO TO 4.
NG >> GO TO 3.

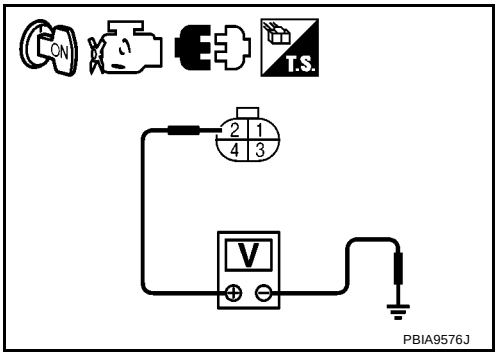

3. DETECT MALFUNCTIONING PART

Check the following.

- Harness connectors E48, F1
- IPDM E/R connector E10
- 10A fuse
- Harness for open or short between heated oxygen sensor 1 and fuse

>> Repair harness or connectors.

4. CHECK HO2S1 OUTPUT SIGNAL CIRCUIT FOR OPEN AND SHORT

1. Turn ignition switch OFF.
2. Disconnect ECM harness connector.
3. Check harness continuity between ECM terminal 24 and HO2S1 terminal 3.
   Refer to Wiring Diagram.

Continuity should exist.

4. Also check harness for short to ground and short to power.

OK or NG

OK >> GO TO 5.
NG >> Repair open circuit or short to ground or short to power in harness or connectors.

5. CHECK HEATED OXYGEN SENSOR 1 HEATER

Refer to EC-148, "Component Inspection" .

OK or NG

OK >> GO TO 6.
NG >> Replace heated oxygen sensor 1.

6. CHECK INTERMITTENT INCIDENT

Refer to EC-127, "TROUBLE DIAGNOSIS FOR INTERMITTENT INCIDENT" .

>> **INSPECTION END**

Component Inspection

BBS002V5

HEATED OXYGEN SENSOR 1 HEATER

1. Check resistance between HO2S1 terminals as follows.

Terminal No.	Resistance
2 and 3	3.4 - 4.4 Ω at 25°C (77°F)
1 and 2, 3, 4	∞ Ω (Continuity should not exist)
4 and 1, 2, 3	

2. If NG, replace heated oxygen sensor 1.

CAUTION:

- **Discard any heated oxygen sensor which has been dropped from a height of more than 0.5 m (19.7 in) onto a hard surface such as a concrete floor; use a new one.**
- **Before installing new oxygen sensor, clean exhaust system threads using Oxygen Sensor Thread Cleaner and approved anti-seize lubricant.**

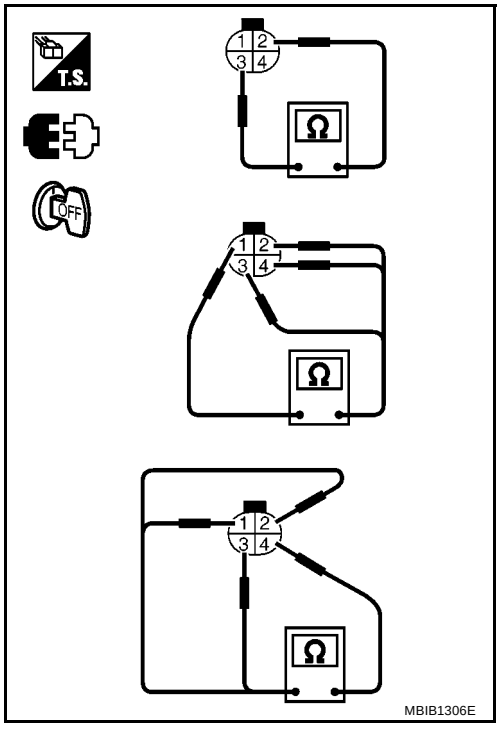

Removal and Installation

BBS002V6

HEATED OXYGEN SENSOR 1

Refer to EM-24, "EXHAUST MANIFOLD AND THREE WAY CATALYST" .

DTC P0037, P0038 HO2S2 HEATER

PFP:226A0

Description

BBS002V7

SYSTEM DESCRIPTION

Sensor	Input Signal to ECM	ECM Function	Actuator
Camshaft position sensor (PHASE)	Engine speed	Heated oxygen sensor 2 heater control	Heated oxygen sensor 2 heater
Crankshaft position sensor (POS)			
Engine coolant temperature sensor	Engine coolant temperature		
Manifold absolute pressure (MAP) sensor	Amount of intake air		

OPERATION

Engine speed rpm	Heated oxygen sensor 2 heater
Above 3,800	OFF
Below 3,800 rpm after the following conditions are met. ● Engine: After warming up ● Keeping the engine speed between 3,500 and 4,000 rpm for 1 minute and at idle for 1 minute under no load	ON

CONSULT-II Reference Value in Data Monitor Mode

BBS002V8

Specification data are reference values.

MONITOR ITEM	CONDITION	SPECIFICATION
HO2S2 HTR (B1)	● Engine speed: Below 3,800 rpm after the following conditions are met. – Engine: After warming up – Keeping the engine speed at between 3,500 to 4,000 rpm for 1 minute and at idle for 1 minute under no load	ON
	● Engine speed: Above 3,800 rpm	OFF

On Board Diagnosis Logic

BBS002V9

DTC No.	Trouble diagnosis name	DTC detecting condition	Possible cause
P0037 0037	Heated oxygen sensor 2 heater control circuit low	The current amperage in the heated oxygen sensor 2 heater circuit is out of the normal range. (An excessively low voltage signal is sent to ECM through the heated oxygen sensor 2 heater.)	● Harness or connectors (The heated oxygen sensor 2 heater circuit is open or shorted.) ● Heated oxygen sensor 2 heater
P0038 0038	Heated oxygen sensor 2 heater control circuit high	The current amperage in the heated oxygen sensor 2 heater circuit is out of the normal range. (An excessively high voltage signal is sent to ECM through the heated oxygen sensor 2 heater.)	● Harness or connectors (The heated oxygen sensor 2 heater circuit is shorted.) ● Heated oxygen sensor 2 heater

DTC Confirmation Procedure

BBS002VA

NOTE:
If DTC Confirmation Procedure has been previously conducted, always turn ignition switch OFF and wait at least 10 seconds before conducting the next test.

TESTING CONDITION:
Before performing the following procedure, confirm that battery voltage is between 10.5V and 16V at idle.

WITH CONSULT-II

1. Turn ignition switch ON and select “DATA MONITOR” mode with CONSULT-II.
2. Start engine and warm it up to the normal operating temperature.
3. Turn ignition switch OFF and wait at least 10 seconds.
4. Start engine and keep the engine speed between 3,500 and 4,000 rpm for at least 1 minute under no load.
5. Let engine idle for 1 minute.
6. If 1st trip DTC is detected, go to EC-152, "Diagnostic Procedure".

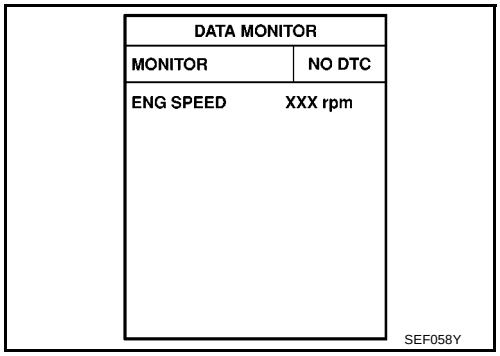

WITH GST

Follow the procedure “WITH CONSULT-II” above.

Wiring Diagram

BBS002VB

EC-HO2S2H-01

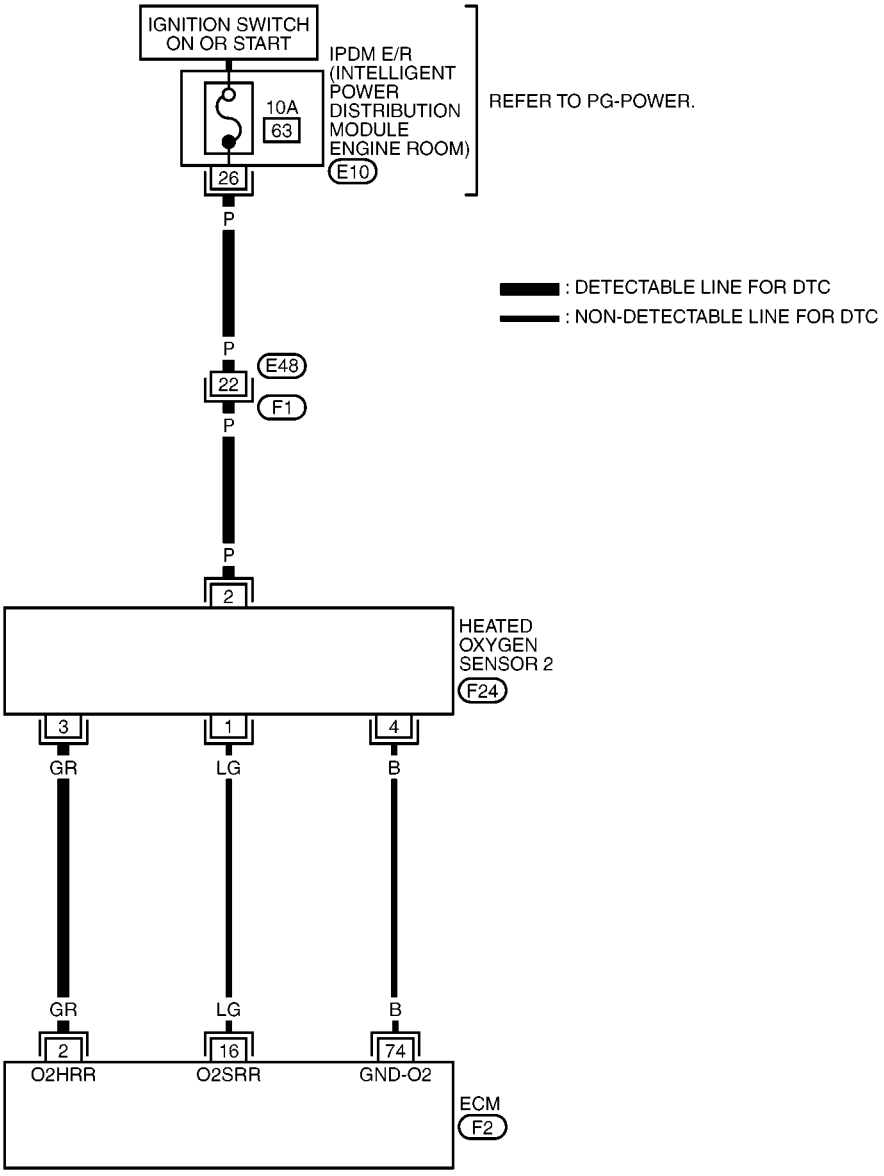

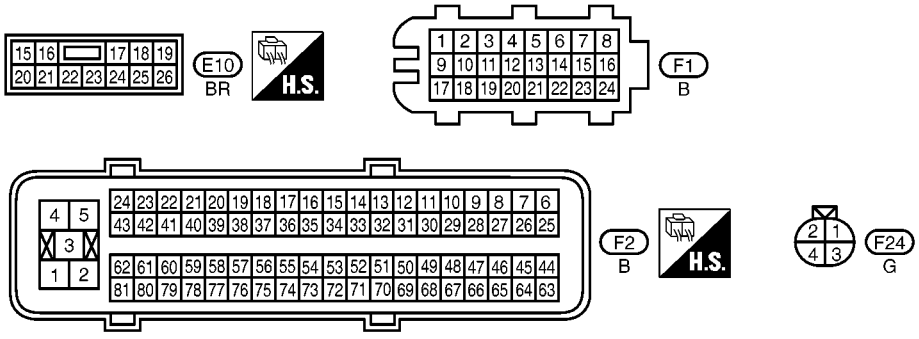

MBWA1505E

Specification data are reference values and are measured between each terminal and ground.

CAUTION:

Do not use ECM ground terminals when measuring input/output voltage. Doing so may result in damage to the ECM's transistor. Use a ground other than ECM terminals, such as the ground.

TERMINAL NO.	WIRE COLOR	ITEM	CONDITION	DATA (DC Voltage)
2	GR	Heated oxygen sensor 2 heater	**[Engine is running]** ● Engine speed: Below 3,800 rpm after the following conditions are met. – Engine: After warming up – Keeping the engine speed between 3,500 and 4,000 rpm for 1 minute and at idle for 1 minute under no load.	0 - 1.0V
			[Ignition switch: ON] ● Engine stopped **[Engine is running]** ● Engine speed: Above 3,800 rpm	BATTERY VOLTAGE (11 - 14V)
16	LG	Heated oxygen sensor 2	**[Engine is running]** ● Revving engine from idle to 3,000rpm quickly after the following conditions are met. – Engine: After warming up – Keeping the engine speed between 3,500 and 4,000 rpm for 1 minute and at idle for 1 minute under no load.	0 - Approximately 1.0V
74	B	Sensor ground (Heated oxygen sensor)	**[Engine is running]** ● **Warm-up condition** ● Idle speed	Approximately 0V

Diagnostic Procedure

BBS002VC

1. CHECK GROUND CONNECTIONS

1. Turn ignition switch OFF.
2. Loosen and retighten ground screws on the body.
   Refer to EC-133, "Ground Inspection" .

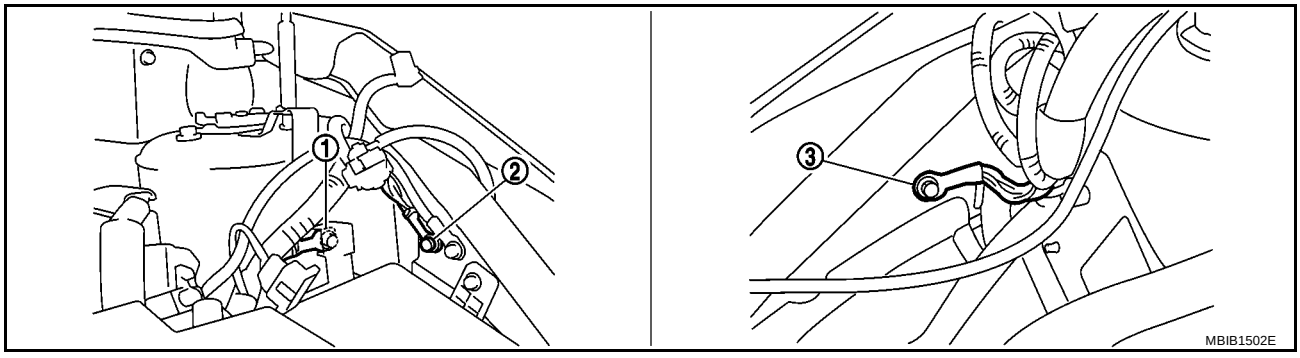

1. Body ground E44
2. Body ground E45
3. Body ground E28

OK or NG

OK >> GO TO 2.
NG >> Repair or replace ground connections.

2. CHECK HO2S2 POWER SUPPLY CIRCUIT

1. Disconnect heated oxygen sensor 2 harness connector (1).
   - ⇦: Vehicle front
   - Heated oxygen sensor 2 (2)
   - Oil pan (3)
2. Turn ignition switch ON.

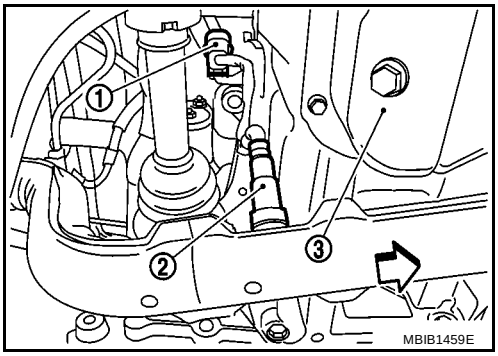

3. Check voltage between HO2S2 terminal 2 and ground with CONSULT-II or tester.

   Voltage: Battery voltage

OK or NG

OK >> GO TO 4.
NG >> GO TO 3.

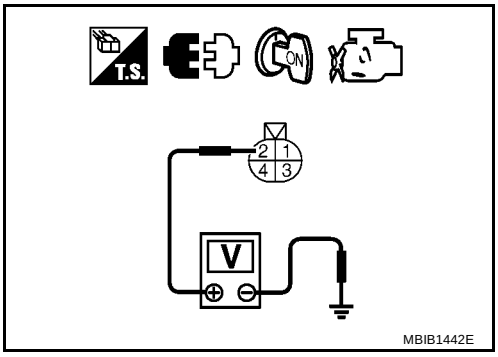

3. DETECT MALFUNCTIONING PART

Check the following.

- Harness connectors E48, F1
- IPDM E/R connector E10
- 10A fuse
- Harness for open or short between heated oxygen sensor 2 and fuse

>> Repair harness or connectors.

4. CHECK HO2S2 OUTPUT SIGNAL CIRCUIT FOR OPEN AND SHORT

1. Turn ignition switch OFF.
2. Disconnect ECM harness connector.
3. Check harness continuity between ECM terminal 2 and HO2S2 terminal 3.
   Refer to Wiring Diagram.

   Continuity should exist.

4. Also check harness for short to ground and short to power.

OK or NG

OK >> GO TO 5.
NG >> Repair open circuit or short to ground or short to power in harness or connectors.

5. CHECK HEATED OXYGEN SENSOR 2 HEATER

Refer to EC-154, "Component Inspection" .

OK or NG

OK >> GO TO 6.
NG >> Replace heated oxygen sensor 2.

6. CHECK INTERMITTENT INCIDENT

Refer to EC-127, "TROUBLE DIAGNOSIS FOR INTERMITTENT INCIDENT" .

>> **INSPECTION END**

Component Inspection

BBS002VD

HEATED OXYGEN SENSOR 2 HEATER

1. Check resistance between HO2S2 terminals as follows.

Terminal No.	Resistance
2 and 3	8.0 - 10.0 Ω at 25°C (77°F)
1 and 2, 3, 4	∞ Ω (Continuity should not exist)
4 and 1, 2, 3	

2. If NG, replace heated oxygen sensor 2.

CAUTION:

- **Discard any heated oxygen sensor which has been dropped from a height of more than 0.5 m (19.7 in) onto a hard surface such as a concrete floor; use a new one.**
- **Before installing new oxygen sensor, clean exhaust system threads using Oxygen Sensor Thread Cleaner and approved anti-seize lubricant.**

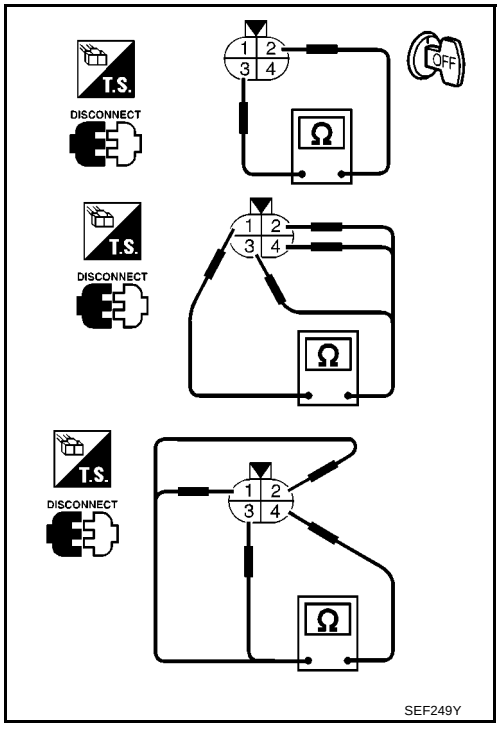

Removal and Installation

BBS002VE

HEATED OXYGEN SENSOR 2

Refer to EX-3, "EXHAUST SYSTEM" .

DTC P0107, P0108 MANIFOLD ABSOLUTE PRESSURE SENSOR

PFP:22365

Component Description

BBS002VF

The manifold absolute pressure (MAP) sensor is placed intake manifold corrector. It detects intake manifold pressure and sends the voltage signal to the ECM, ECM uses the signal to compute intake air volume value.
The sensor uses a silicon diaphragm which is sensitive to the change in pressure. As the pressure increase, the voltage rises.

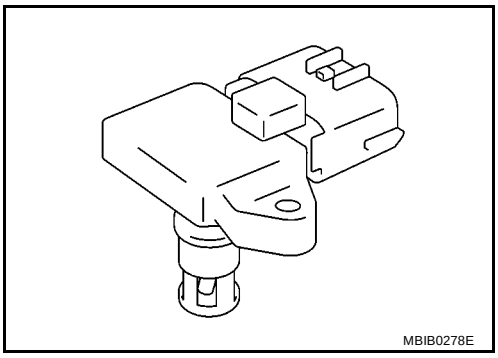

On Board Diagnosis Logic

BBS002VG

If DTC P0107 or P0108 is displayed with DTC P1229, first perform the trouble diagnosis for DTC P1229. Refer to EC-363, "DTC P1229 SENSOR POWER SUPPLY" .

DTC No.	Trouble diagnosis name	DTC detecting condition	Possible cause
P0107 0107	Manifold absolute pressure sensor circuit low input	An excessively low voltage from the sensor is sent to ECM.	● Harness or connectors (The sensor circuit is open or shorted.) ● Manifold absolute pressure sensor
P0108 0108	Manifold absolute pressure sensor circuit high input	An excessively high voltage from the sensor is sent to ECM.	● Harness or connectors (The sensor circuit is open or shorted) ● Manifold absolute pressure sensor ● Intake air leaks

FAIL-SAFE MODE

When the malfunction is detected, the ECM enters fail-safe mode.

Detected items	Engine operating condition in fail-safe mode
Manifold absolute pressure sensor circuit	Engine speed will not rise more than 2,500 rpm due to the fuel cut.

DTC Confirmation Procedure

BBS002VH

NOTE:
If DTC Confirmation Procedure has been previously conducted, always turn ignition switch OFF and wait at least 10 seconds before conducting the next test.

WITH CONSULT-II

1. Turn ignition switch ON.
2. Select “DATA MONITOR” mode with CONSULT-II.
3. Wait at least 5 seconds.
4. If 1st trip DTC is detected, go to EC-157, "Diagnostic Procedure" .

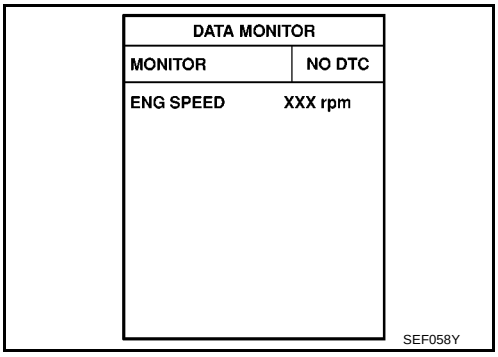

WITH GST

Follow the procedure “WITH CONSULT-II” above.

Wiring Diagram

BBS002VI

EC-AP/SEN-01

: DETECTABLE LINE FOR DTC
: NON-DETECTABLE LINE FOR DTC

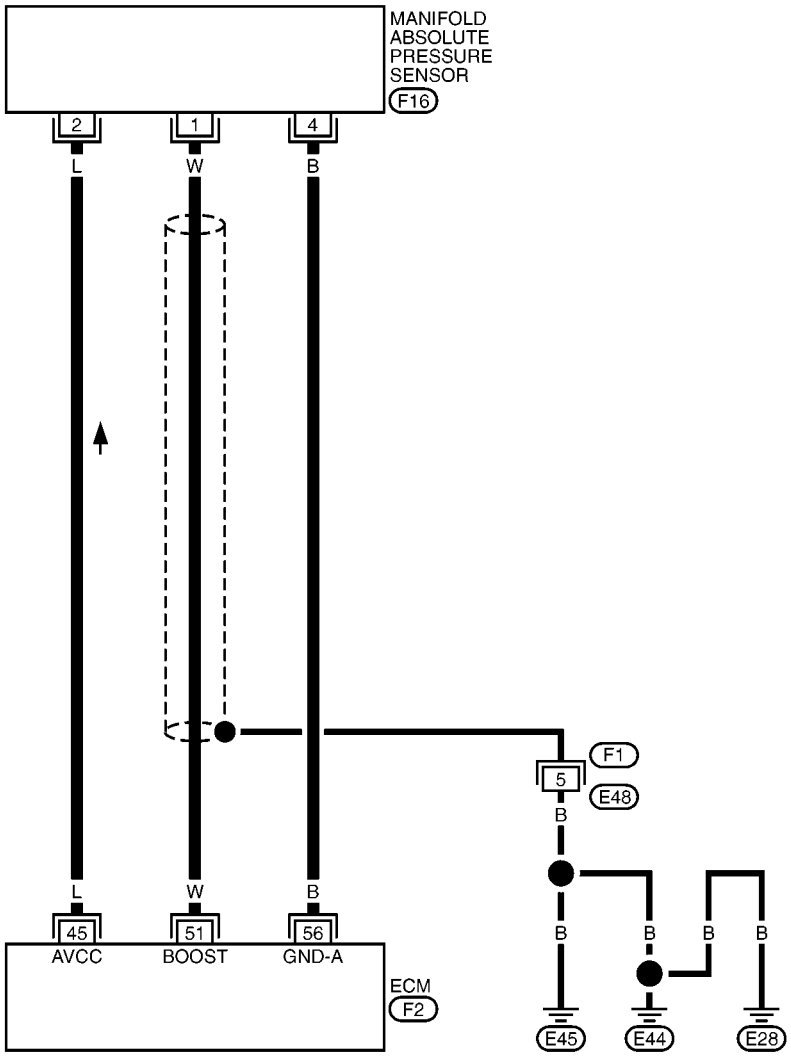

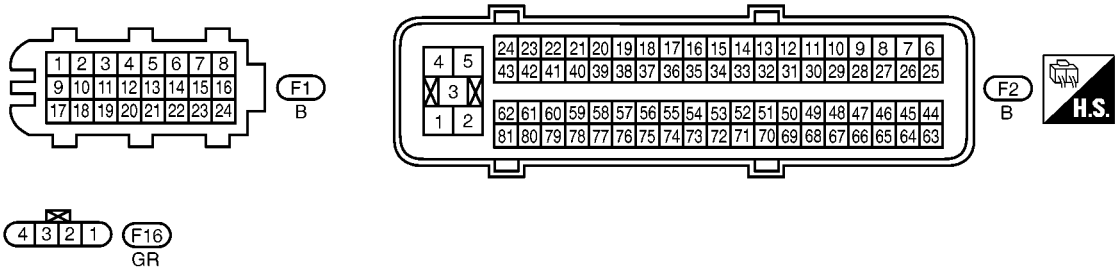

MBWA1506E

Specification data are reference values and are measured between each terminal and ground.

CAUTION:

Do not use ECM ground terminals when measuring input/output voltage. Doing so may result in damage to the ECM's transistor. Use a ground other than ECM terminals, such as the ground.

TERMINAL NO.	WIRE COLOR	ITEM	CONDITION	DATA (DC Voltage)
45	L	Sensor power supply (Manifold absolute pressure sensor)	**[Ignition switch: ON]**	Approximately 5V
51	W	Manifold absolute pressure sensor	**[Engine is running]** ● **Warm-up condition** ● Idle speed	Approximately 1.5V
			[Engine is running] ● **Warm-up condition** ● Engine speed: 2,000 rpm	Approximately 1.2V
56	B	Sensor ground (Manifold absolute pressure sensor)	**[Engine is running]** ● **Warm-up condition** ● Idle speed	Approximately 0V

Diagnostic Procedure

BBS002VJ

1. INSPECTION START

Which malfunction (P0107 or P0108) is duplicated?

P0107 or P0108

P0107 >> GO TO 3.
P0108 >> GO TO 2.

2. CHECK INTAKE SYSTEM

Check the following for connection.

- Air duct
- Vacuum hoses
- Intake air passage between air duct to intake manifold

OK or NG

OK >> GO TO 3.
NG >> Reconnect the parts.

3. CHECK GROUND CONNECTIONS

1. Turn ignition switch OFF.
2. Loosen and retighten ground screws on the body.
   Refer to EC-133, "Ground Inspection" .

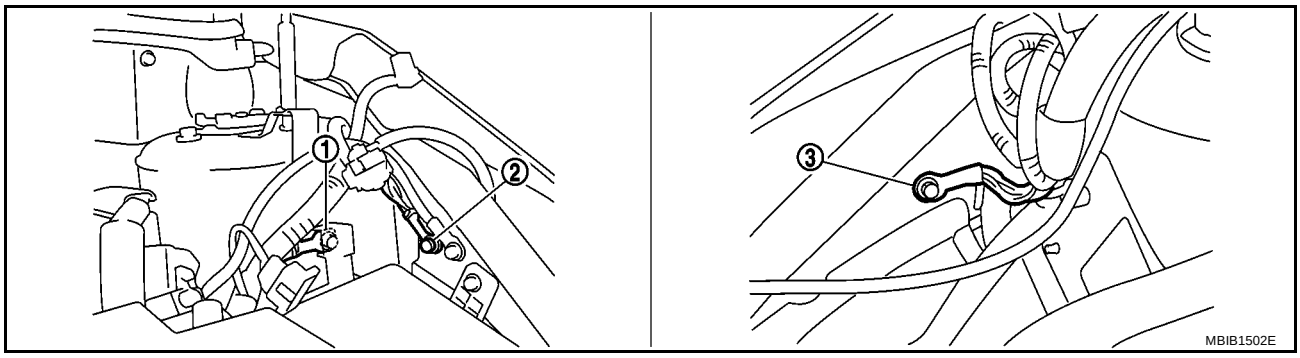

1. Body ground E44
2. Body ground E45
3. Body ground E28

OK or NG

OK >> GO TO 4.
NG >> Repair or replace ground connections.

4. CHECK MAP SENSOR POWER SUPPLY CIRCUIT

1. Disconnect manifold absolute pressure (MAP) sensor harness connector.
2. Turn ignition switch ON.

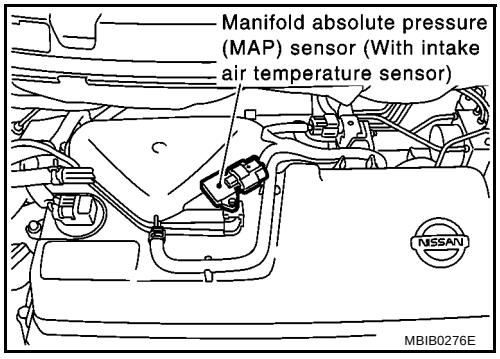

3. Check voltage between MAP sensor terminal 2 and ground with CONSULT-II or tester.

   Voltage: Approximately 5V

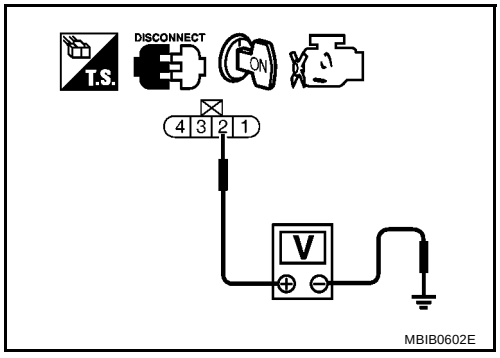

OK or NG

OK >> GO TO 5.
NG >> Repair harness or connectors.

5. CHECK MAP SENSOR GROUND CIRCUIT FOR OPEN AND SHORT

1. Turn ignition switch OFF.
2. Disconnect ECM harness connector.
3. Check harness continuity between MAP sensor terminal 4 and ECM terminal 56
   Refer to Wiring Diagram.

   Continuity should exist.

4. Also check harness for short to ground and short to power.

OK or NG

OK >> GO TO 6.
NG >> Repair open circuit or short to ground or short to power in harness or connectors.

6. CHECK MAP SENSOR INPUT SIGNAL CIRCUIT FOR OPEN AND SHORT

1. Check harness continuity between MAP sensor terminal 1 and ECM terminal 51.
   Refer to Wiring Diagram

   Continuity should exist.

2. Also check harness for short to ground and short to power.

OK or NG

OK >> GO TO 7.
NG >> Repair open circuit or short to ground or short to power in harness or connectors.

7. CHECK MAP SENSOR

Refer to EC-159, "Component Inspection" .

OK or NG

OK >> GO TO 8.
NG >> Replace manifold absolute pressure sensor.

8. CHECK INTERMITTENT INCIDENT

Refer to EC-127, "TROUBLE DIAGNOSIS FOR INTERMITTENT INCIDENT" .

>> **INSPECTION END**

Component Inspection

BBS002VK

MANIFOLD ABSOLUTE PRESSURE SENSOR

1. Reconnect all harness connectors disconnected.
2. Start engine and warm it up to normal operating temperature.
3. Turn ignition switch OFF, wait at least 5 seconds and then turn ON.
4. Check voltage between ECM terminal 51 (manifold absolute pressure sensor signal) and ground.

   NOTE:
   - To avoid the affection of intake manifold vacuum, check the voltage 1 or more minutes past after engine is stopped.
   - Because the sensor is absolute pressure sensor, output value may differ depends on atmospheric pressure and altitude.

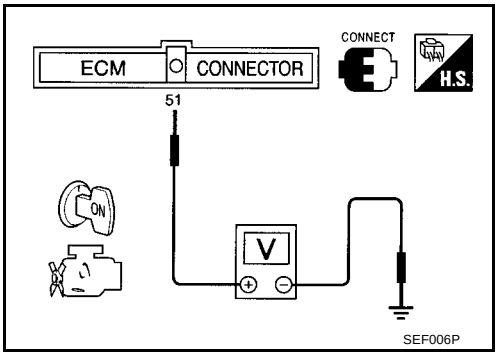

5. Measure the atmospheric pressure.

   NOTE:
   As atmospheric pressure describe on synoptic chart is value at sea level, please compensate the actual pressure with the following chart.

Altitude	Compensated pressure
0m	0hPa
200m	-24hPa
400m	-47hPa
600m	-70hPa
800m	-92hPa
1,000m	-114hPa
1,500m	-168hPa
2,000m	-218hPa

6. Check the manifold absolute pressure sensor value corresponds to the atmospheric pressure.

Atmospheric pressure	Voltage
800hPa	3.2 - 3.6V
850hPa	3.4 - 3.8V
900hPa	3.7 - 4.1V
960hPa	3.9 - 4.3V
1,000hPa	4.1 - 4.5V
1,050hPa	4.3 - 4.7V

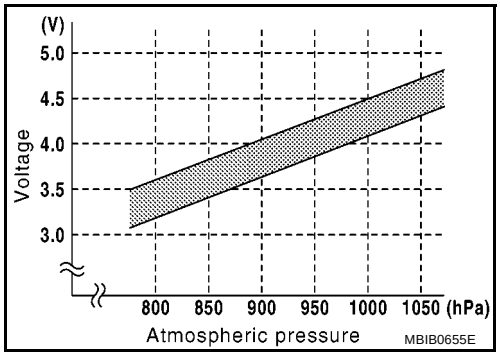

7. Start engine and let it idle.

8. Check the voltage between ECM terminal 51 and ground at idling and confirm the voltage difference between engine is stopped and at idling is within following chart.

Intake manifold vacuum	Voltage difference
-40kPa (-300mmHg)	1.6 - 2.0V
-53.3kPa (-400mmHg)	2.2 - 2.6V
-66.7kPa (-500mm)	2.8 - 3.2V
-80kPa (-600mmHg)	3.4 - 3.8V

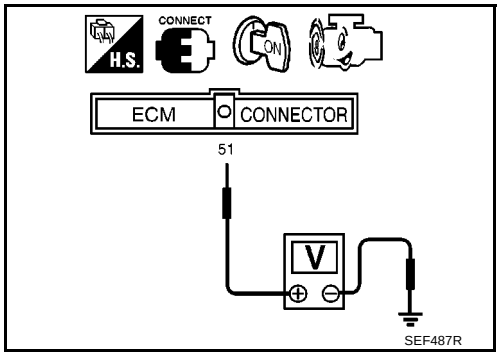

BBS002VL

Removal and Installation

MANIFOLD ABSOLUTE PRESSURE SENSOR

Refer to EM-18, "AIR CLEANER AND AIR DUCT" .

DTC P0112, P0113 IAT SENSOR

PFP:22630

Component Description

BBS002VM

The intake air temperature sensor is built into manifold absolute pressure sensor. The sensor detects intake air temperature and transmits a signal to the ECM.
The temperature sensing unit uses a thermistor which is sensitive to the change in temperature. Electrical resistance of the thermistor decreases in response to the temperature rise.

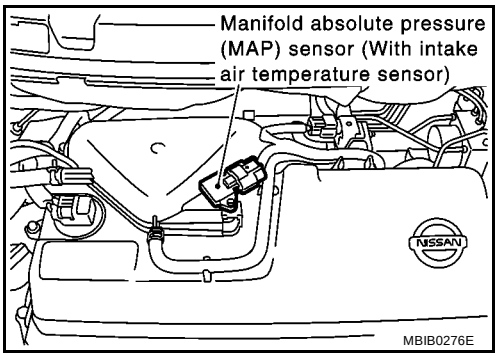

<Reference data>

Intake air temperature °C (°F)	Voltage* V	Resistance kΩ
25 (77)	3.32	1.9 - 2.1
80 (176)	1.23	0.31 - 0.37

*: This data is reference value and is measured between ECM terminal 34 (Intake air temperature sensor) and ground.

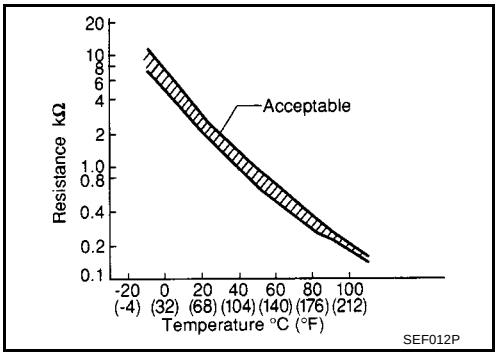

CAUTION:
Do not use ECM ground terminals when measuring input/output voltage. Doing so may result in damage to the ECM's transistor. Use a ground other than ECM terminals, such as the ground.

On Board Diagnosis Logic

BBS002VN

DTC No.	Trouble diagnosis name	DTC detecting condition	Possible cause
P0112 0112	Intake air temperature sensor circuit low input	An excessively low voltage from the sensor is sent to ECM.	● Harness or connectors (The sensor circuit is open or shorted.) ● Intake air temperature sensor
P0113 0113	Intake air temperature sensor circuit high input	An excessively high voltage from the sensor is sent to ECM.	

FAIL-SAFE MODE

When the malfunction is detected, the ECM enters fail-safe mode.

Detected items	Engine operating condition in fail-safe mode
Intake air temperature sensor circuit	Intake air temperature is determined as 30°C (86°F).

DTC Confirmation Procedure

BBS002VO

NOTE:
If DTC Confirmation Procedure has been previously conducted, always turn ignition switch OFF and wait at least 10 seconds before conducting the next test.

WITH CONSULT-II

1. Turn ignition switch ON.
2. Select “DATA MONITOR” mode with CONSULT-II.
3. Wait at least 5 seconds.
4. If 1st trip DTC is detected, go to EC-164, "Diagnostic Procedure"
.

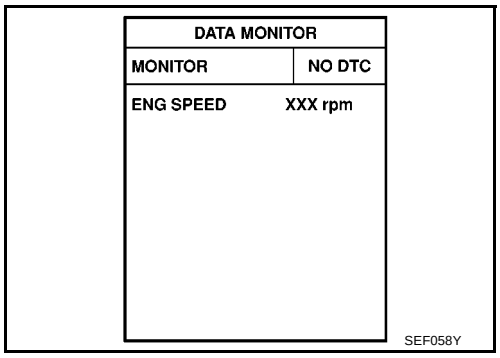

WITH GST

Follow the procedure “WITH CONSULT-II” above.

Wiring Diagram

BBS002VP

EC-IATS-01

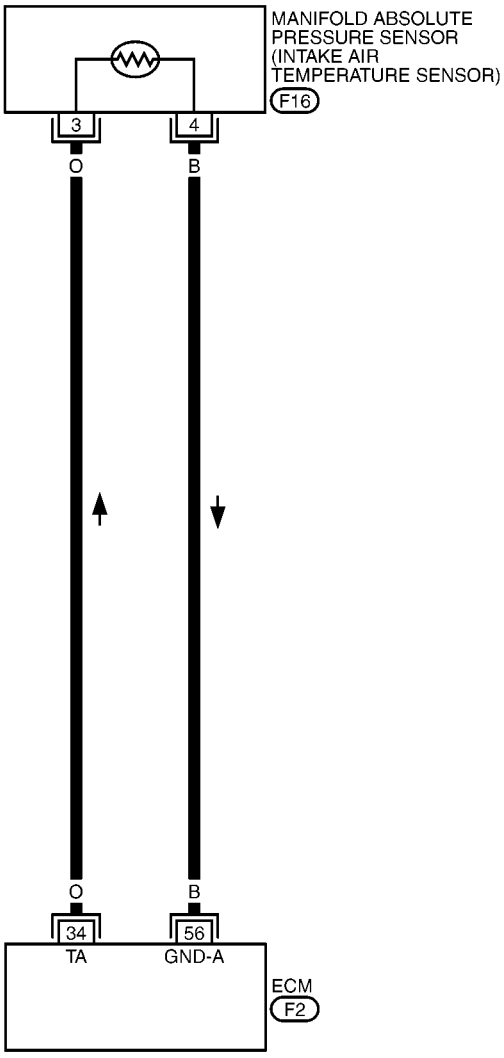

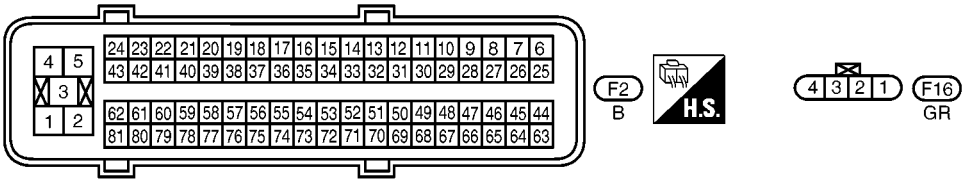

MBWA1507E

Diagnostic Procedure

BBS002VQ

1. CHECK GROUND CONNECTIONS

1. Turn ignition switch OFF.
2. Loosen and retighten ground screws on the body.
   Refer to EC-133, "Ground Inspection" .

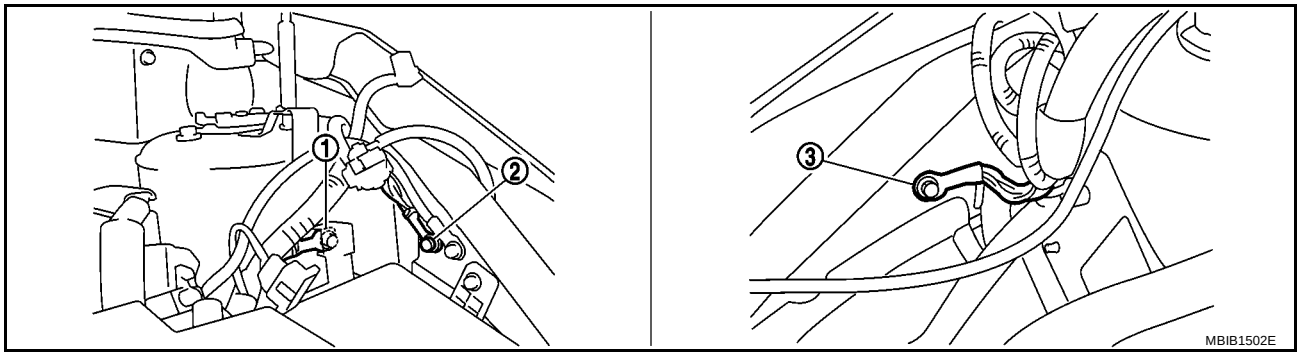

1. Body ground E44
2. Body ground E45
3. Body ground E28

OK or NG

OK >> GO TO 2.
NG >> Repair or replace ground connections.

2. CHECK INTAKE AIR TEMPERATURE SENSOR POWER SUPPLY CIRCUIT

1. Disconnect manifold absolute pressure (MAP) sensor (with intake air temperature sensor) harness connector.
2. Turn ignition switch ON.

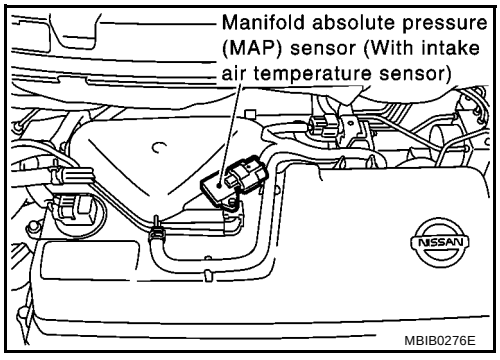

3. Check voltage between MAP sensor terminal 3 and ground with CONSULT-II or tester.

   Voltage: Approximately 5V

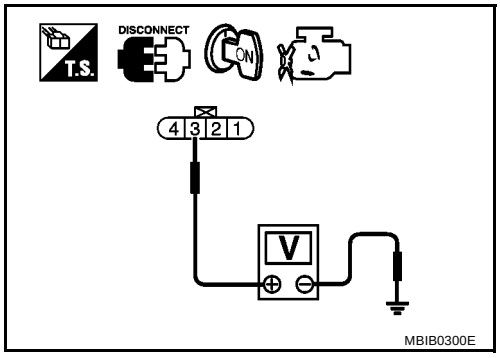

OK or NG

OK >> GO TO 3.
NG >> Repair harness or connectors.

3. CHECK INTAKE AIR TEMPERATURE SENSOR GROUND CIRCUIT FOR OPEN AND SHORT

1. Turn ignition switch OFF.
2. Disconnect ECM harness connector.
3. Check harness continuity between MAP sensor terminal 4 and ECM terminal 56.
   Refer to Wiring Diagram.

   Continuity should exist.

4. Also check harness for short to ground and short to power.

OK or NG

OK >> GO TO 4.
NG >> Repair open circuit or short to ground or short to power in harness or connectors.

4. CHECK INTAKE AIR TEMPERATURE SENSOR

Refer to EC-165, "Component Inspection" .

OK or NG

OK >> GO TO 5.
NG >> Replace manifold absolute pressure sensor (with intake air temperature sensor).

5. CHECK INTERMITTENT INCIDENT

Refer to EC-127, "TROUBLE DIAGNOSIS FOR INTERMITTENT INCIDENT" .

>> **INSPECTION END**

Component Inspection

BBS002VR

INTAKE AIR TEMPERATURE SENSOR

1. Check resistance between manifold absolute pressure sensor terminals 3 and 4 under the following conditions.

Intake air temperature °C (°F)	Resistance kΩ
25 (77)	1.9 - 2.1

2. If NG, replace manifold absolute pressure sensor (with intake air temperature sensor).

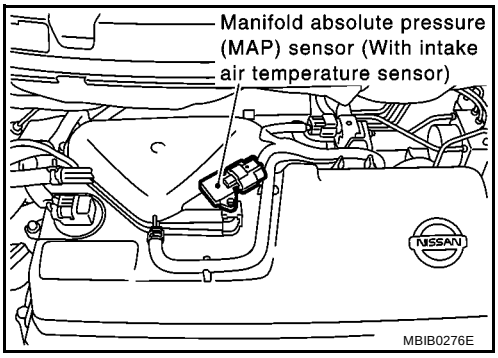

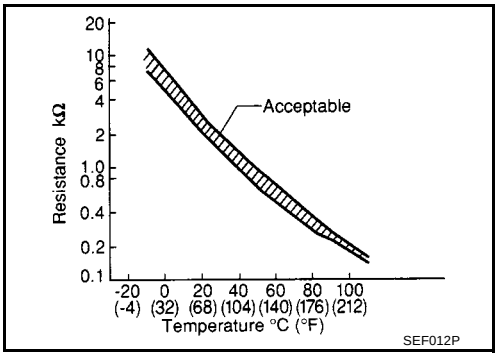

Removal and Installation

BBS002VS

MANIFOLD ABSOLUTE PRESSURE SENSOR

Refer to EM-18, "AIR CLEANER AND AIR DUCT" .

DTC P0117, P0118 ECT SENSOR

PFP:22630

Component Description

BBS002VT

The engine coolant temperature sensor is used to detect the engine coolant temperature. The sensor modifies a voltage signal from the ECM. The modified signal returns to the ECM as the engine coolant temperature input. The sensor uses a thermistor which is sensitive to the change in temperature. The electrical resistance of the thermistor decreases as temperature increases.

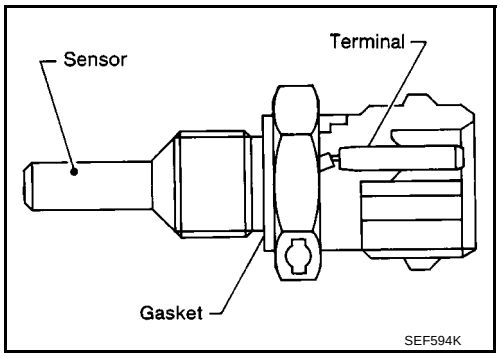

<Reference data>

Engine coolant temperature °C (°F)	Voltage* V	Resistance kΩ
–10 (14)	4.4	7.0 - 11.4
20 (68)	3.5	2.1 - 2.9
50 (122)	2.2	0.68 - 1.00
90 (194)	0.9	0.236 - 0.260

*: This data is reference value and is measured between ECM terminal 72 (Engine coolant temperature sensor) and ground.

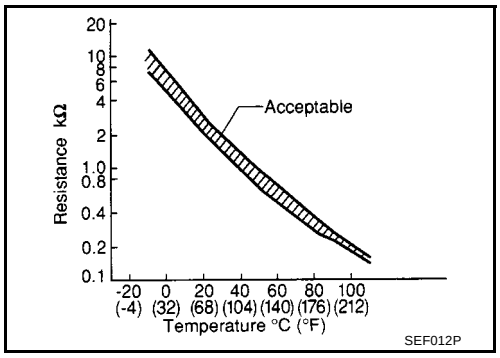

CAUTION:

Do not use ECM ground terminals when measuring input/output voltage. Doing so may result in damage to the ECM's transistor. Use a ground other than ECM terminals, such as the ground.

On Board Diagnosis Logic

BBS002VU

These self-diagnoses have the one trip detection logic.

DTC No.	Trouble Diagnosis Name	DTC Detecting Condition	Possible Cause
P0117 0117	Engine coolant temperature sensor circuit low input	An excessively low voltage from the sensor is sent to ECM.	● Harness or connectors (The sensor circuit is open or shorted.) ● Engine coolant temperature sensor
P0118 0118	Engine coolant temperature sensor circuit high input	An excessively high voltage from the sensor is sent to ECM.	

FAIL-SAFE MODE

When this malfunction is detected, the ECM enters fail-safe mode and the MI lights up.

Detected items	Engine operating condition in fail-safe mode	
Engine coolant temperature sensor circuit	Engine coolant temperature will be determined by ECM based on the time after turning ignition switch ON or START. CONSULT-II displays the engine coolant temperature decided by ECM.	
	Condition	Engine coolant temperature decided (CONSULT-II display)
	Just as ignition switch is turned ON or START	40°C (104°F)
	More than approx. 4 minutes after ignition ON or START	80°C (176°F)
	Except as shown above	40 - 80°C (104 - 176°F) (Depends on the time)
	When the fail-safe system for engine coolant temperature sensor is activated, the cooling fan operates while engine is running.	

DTC Confirmation Procedure

BBS002VV

NOTE:
If DTC Confirmation Procedure has been previously conducted, always turn ignition switch OFF and wait at least 10 seconds before conducting the next test.

WITH CONSULT-II

1. Turn ignition switch ON.
2. Select “DATA MONITOR” mode with CONSULT-II.
3. Wait at least 5 seconds.
4. If DTC is detected, go to EC-169, "Diagnostic Procedure" .

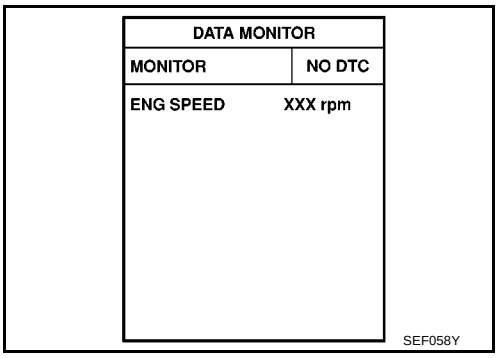

WITH GST

Follow the procedure “WITH CONSULT-II” above.

Wiring Diagram

BBS002VW

EC-ECTS-01

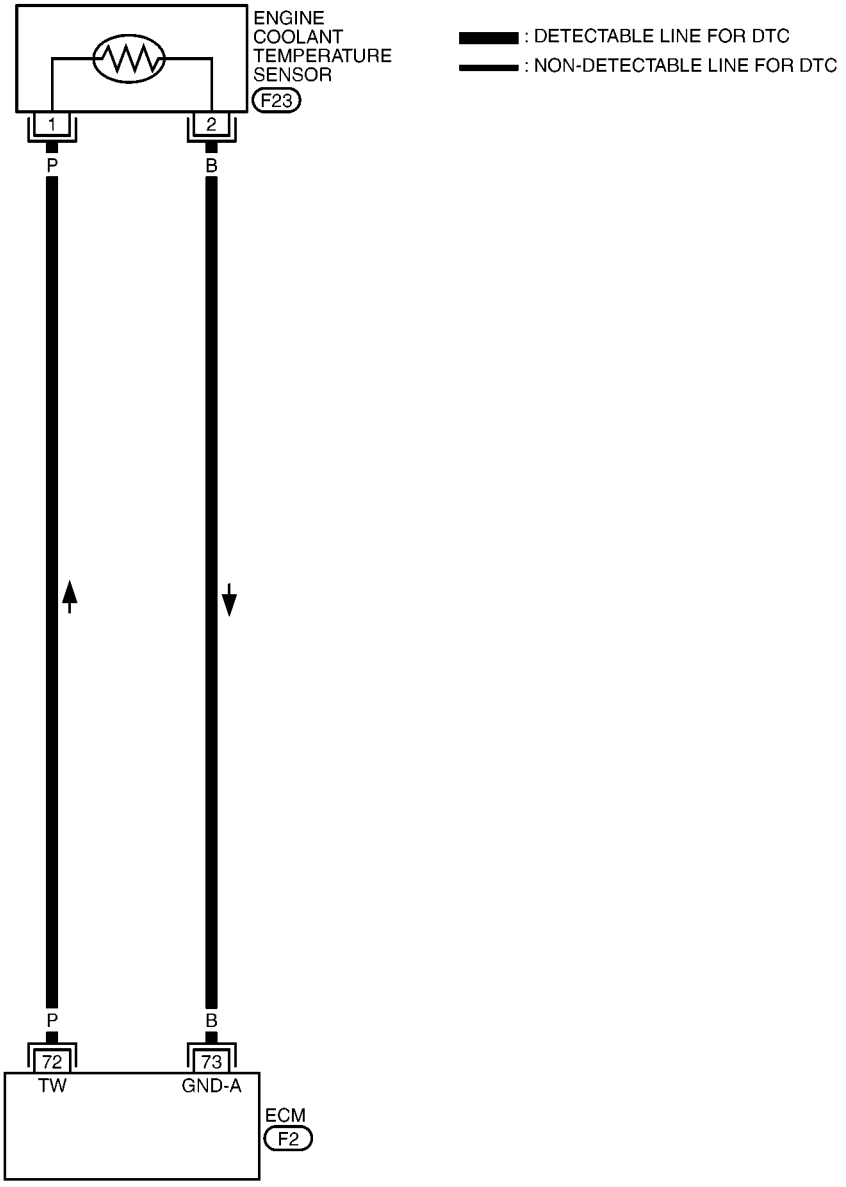

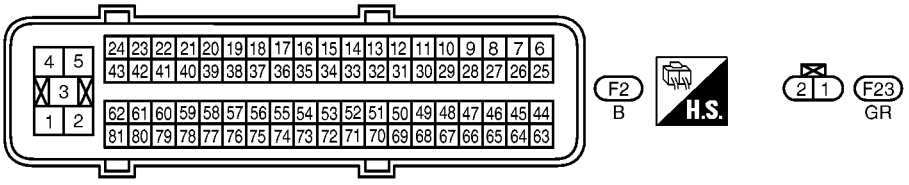

MBWA1508E

Diagnostic Procedure

BBS002VX

1. CHECK GROUND CONNECTIONS

1. Turn ignition switch OFF.
2. Loosen and retighten ground screws on the body.
   Refer to EC-133, "Ground Inspection" .

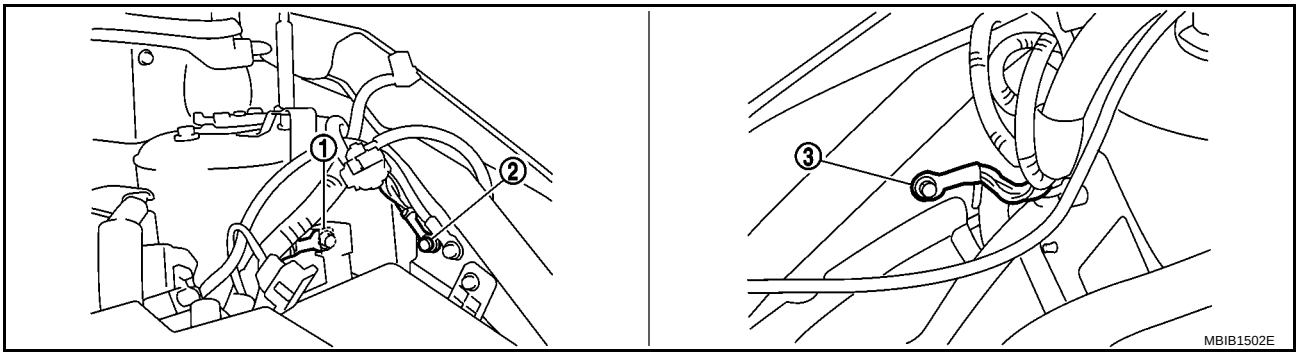

1. Body ground E44
2. Body ground E45
3. Body ground E28

OK or NG

OK >> GO TO 2.
NG >> Repair or replace ground connections.

2. CHECK ECT SENSOR POWER SUPPLY CIRCUIT

1. Disconnect engine coolant temperature (ECT) sensor harness connector.
2. Turn ignition switch ON.

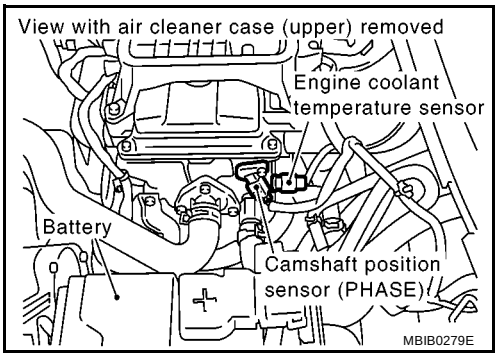

3. Check voltage between ECT sensor terminal 1 and ground with CONSULT-II or tester.

   Voltage: Approximately 5V

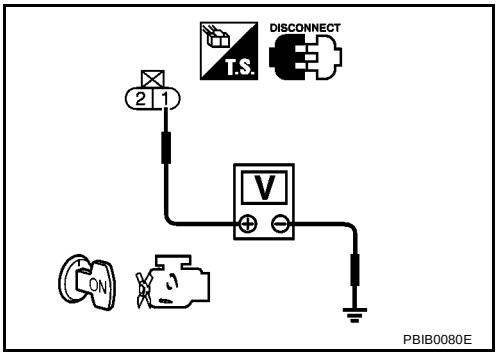

OK or NG

OK >> GO TO 3.
NG >> Repair open circuit or short to ground or short to power in harness or connectors.

3. CHECK ECT SENSOR GROUND CIRCUIT FOR OPEN AND SHORT

1. Turn ignition switch OFF.
2. Disconnect ECM harness connector.
3. Check harness continuity between ECT sensor terminal 2 and ECM terminal 73.
   Refer to Wiring Diagram.

   Continuity should exist.

4. Also check harness for short to ground and short to power.

OK or NG

OK >> GO TO 4.
NG >> Repair open circuit or short to ground or short to power in harness or connectors.

4. CHECK ENGINE COOLANT TEMPERATURE SENSOR

Refer to EC-170, "Component Inspection" .

OK or NG

OK >> GO TO 5.
NG >> Replace engine coolant temperature sensor.

5. CHECK INTERMITTENT INCIDENT

Refer to EC-127, "TROUBLE DIAGNOSIS FOR INTERMITTENT INCIDENT" .

>> **INSPECTION END**

Component Inspection

BBS002VY

ENGINE COOLANT TEMPERATURE SENSOR

1. Check resistance between engine coolant temperature sensor terminals 1 and 2 as shown in the figure.

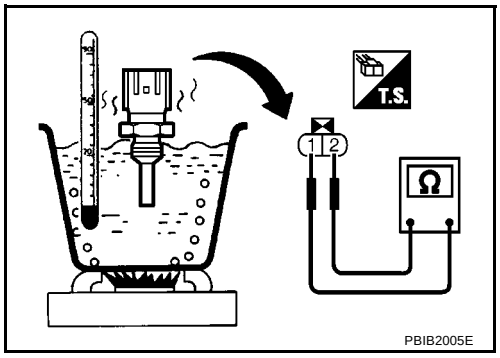

PBIB2005E

<Reference data>

Engine coolant temperature °C (°F)	Resistance kΩ
20 (68)	2.1 - 2.9
50 (122)	0.68 - 1.00
90 (194)	0.236 - 0.260

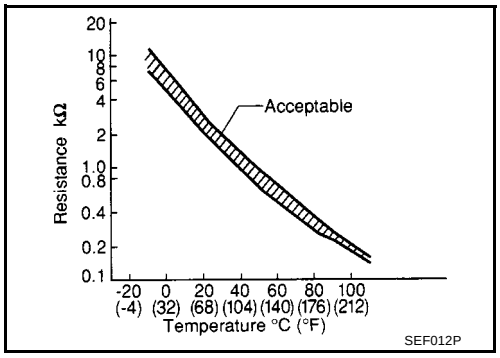

SEF012P

2. If NG, replace engine coolant temperature sensor.

Removal and Installation

BBS002VZ

ENGINE COOLANT TEMPERATURE SENSOR

Refer to CO-19, "THERMOSTAT" .

DTC P0122, P0123 TP SENSOR

PFP:16119

Component Description

BBS002W0

Electric throttle control actuator consists of throttle control motor, throttle position sensor, etc. The throttle position sensor responds to the throttle valve movement.
The throttle position sensor has the two sensors. These sensors are a kind of potentiometers which transform the throttle valve position into output voltage, and emit the voltage signal to the ECM. In addition, these sensors detect the opening and closing speed of the throttle valve and feed the voltage signals to the ECM. The ECM judges the current opening angle of the throttle valve from these signals and the ECM controls the throttle control motor to make the throttle valve opening angle properly in response to driving condition.

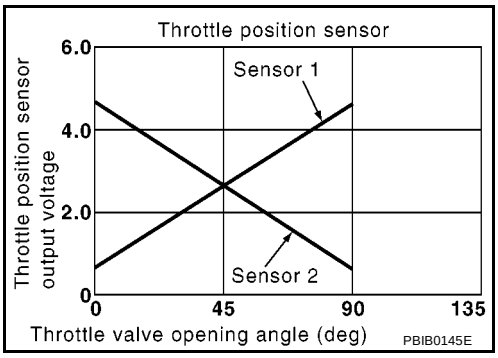

CONSULT-II Reference Value in Data Monitor Mode

BBS002W1

Specification data are reference values.

MONITOR ITEM	CONDITION		SPECIFICATION
THRTL SEN 1 THRTL SEN 2*	● Ignition switch: ON (Engine stopped)	Accelerator pedal: Fully released	More than 0.36V
	● Shift lever: 1st	Accelerator pedal: Fully depressed	Less than 4.75V

*: Throttle position sensor 2 signal is converted by ECM internally. Thus, it differs from ECM terminal voltage signal.

On Board Diagnosis Logic

BBS002W2

These self-diagnoses have the one trip detection logic.

DTC No.	Trouble diagnosis name	DTC detecting condition	Possible cause
P0122 0122	Throttle position sensor 2 circuit low input	An excessively low voltage from the TP sensor 2 is sent to ECM.	● Harness or connectors (TP sensor 2 circuit is open or shorted.) (APP sensor 2 circuit is shorted.) ● Electric throttle control actuator (TP sensor 2) ● Accelerator pedal position sensor (APP sensor 2)
P0123 0123	Throttle position sensor 2 circuit high input	An excessively high voltage from the TP sensor 2 is sent to ECM.	

FAIL-SAFE MODE

When the malfunction is detected, the ECM enters fail-safe mode and the MI lights up.

Engine operation condition in fail-safe mode
The ECM controls the electric throttle control actuator in regulating the throttle opening in order for the idle position to be within +10 degrees. The ECM regulates the opening speed of the throttle valve to be slower than the normal condition. So, the acceleration will be poor.

DTC Confirmation Procedure

BBS002W3

NOTE:
If DTC Confirmation Procedure has been previously conducted, always turn ignition switch OFF and wait at least 10 seconds before conducting the next test.
TESTING CONDITION:
Before performing the following procedure, confirm that battery voltage is more than 10V at idle.

WITH CONSULT-II

1. Turn ignition switch ON.
2. Select “DATA MONITOR” mode with CONSULT-II.
3. Start engine and let it idle for 1 second.
4. If DTC is detected, go to EC-174, "Diagnostic Procedure" .

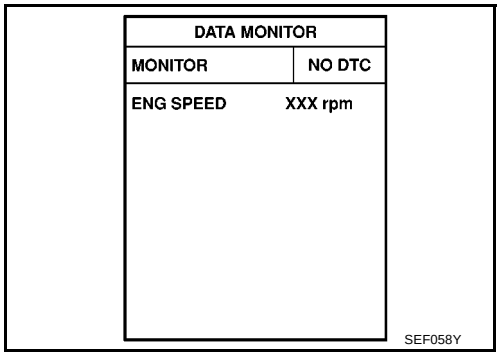

WITH GST

Follow the procedure “WITH CONSULT-II” above.

Wiring Diagram

BBS002W4

EC-TPS2-01

: DETECTABLE LINE FOR DTC
: NON-DETECTABLE LINE FOR DTC

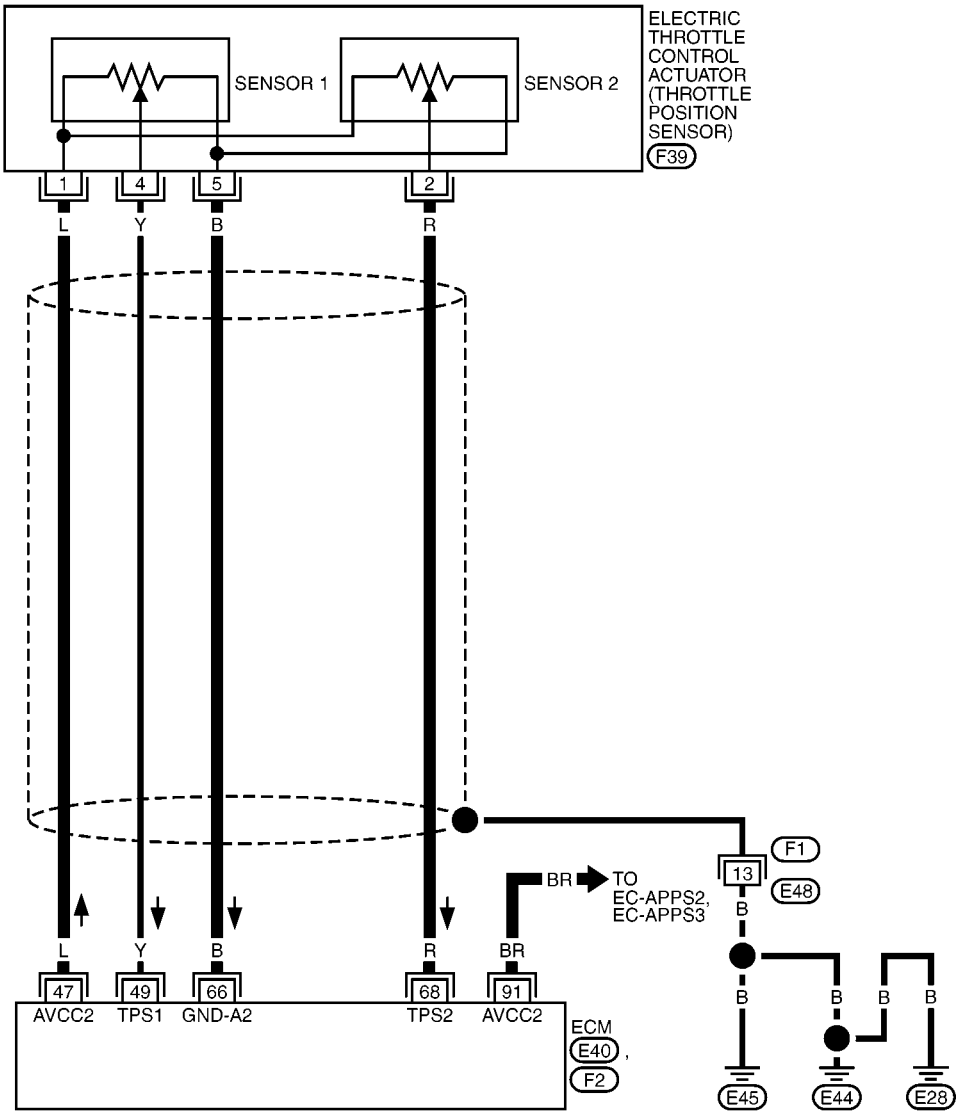

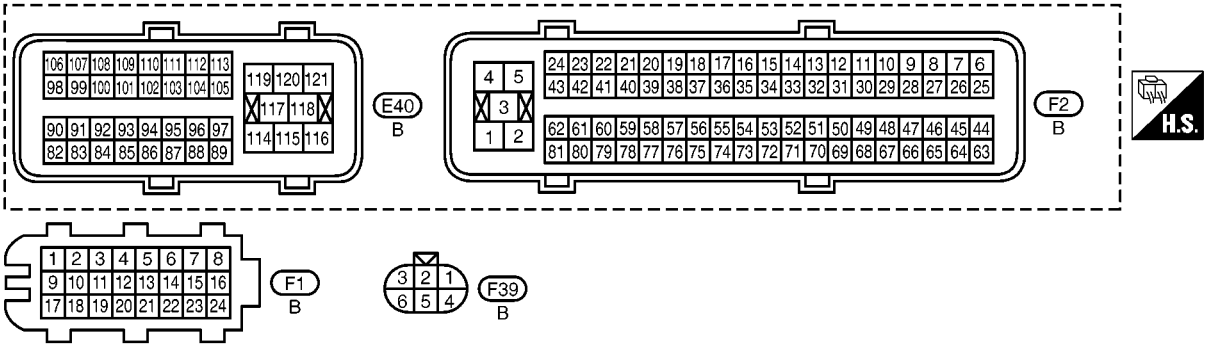

MBWA1509E

Specification data are reference values and are measured between each terminal and ground.

CAUTION:

Do not use ECM ground terminals when measuring input/output voltage. Doing so may result in damage to the ECM's transistor. Use a ground other than ECM terminals, such as the ground.

TERMINAL NO.	WIRE COLOR	ITEM	CONDITION	DATA (DC Voltage)
47	L	Sensor power supply (Throttle position sensor)	**[Ignition switch: ON]**	Approximately 5V
49	Y	Throttle position sensor 1	**[Ignition switch: ON]** ● **Engine stopped** ● Shift lever position: 1st ● Accelerator pedal: Fully released	More than 0.36V
			[Ignition switch: ON] ● **Engine stopped** ● Shift lever position: 1st ● Accelerator pedal: Fully depressed	Less than 4.75V
66	B	Sensor ground (Throttle position sensor)	**[Engine is running]** ● **Warm-up condition** ● Idle speed	Approximately 0V
68	R	Throttle position sensor 2	**[Ignition switch: ON]** ● **Engine stopped** ● Shift lever position: 1st ● Accelerator pedal: Fully released	Less than 4.75V
			[Ignition switch: ON] ● **Engine stopped** ● Shift lever position: 1st ● Accelerator pedal: Fully depressed	More than 0.36V
91	BR	Sensor power supply (APP sensor 2)	**[Ignition switch: ON]**	Approximately 5V

Diagnostic Procedure

BBS002W5

1. CHECK GROUND CONNECTIONS

1. Turn ignition switch OFF.
2. Loosen and retighten ground screws on the body.
   Refer to EC-133, "Ground Inspection" .

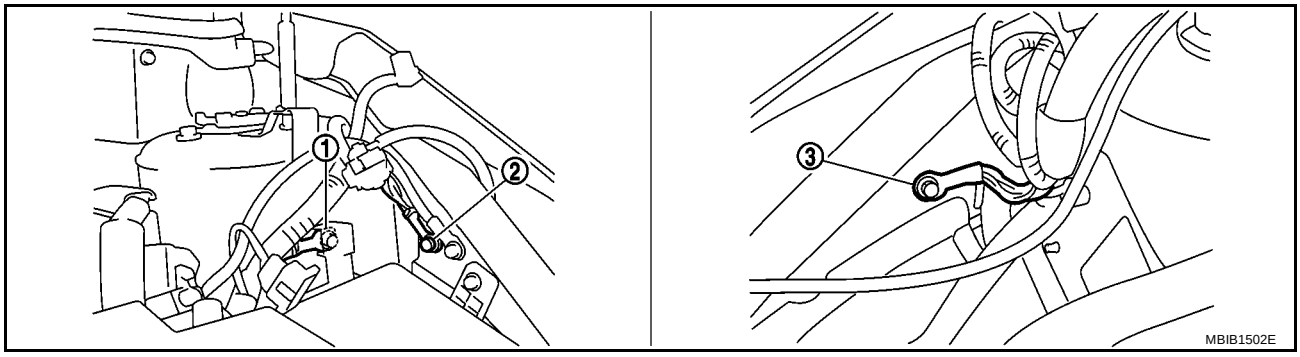

1. Body ground E44
2. Body ground E45
3. Body ground E28

OK or NG

OK >> GO TO 2.
NG >> Repair or replace ground connections.

2. CHECK THROTTLE POSITION SENSOR 2 POWER SUPPLY CIRCUIT-I

1. Disconnect electric throttle control actuator harness connector.
2. Turn ignition switch ON.

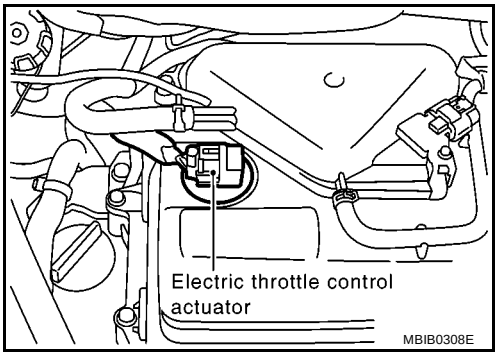

3. Check voltage between electric throttle control actuator terminal 1 and ground with CONSULT-II or tester.

Voltage: Approximately 5V

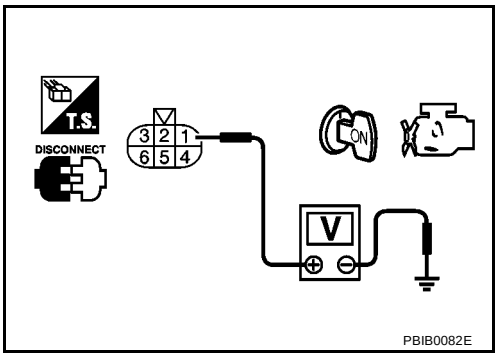

OK or NG

OK >> GO TO 7.
NG >> GO TO 3.

3. CHECK THROTTLE POSITION SENSOR 2 POWER SUPPLY CIRCUIT-II

1. Turn ignition switch OFF.
2. Disconnect ECM harness connector.
3. Check harness continuity between electric throttle control actuator terminal 1 and ECM terminal 47. Refer to Wiring Diagram.

Continuity should exist.

OK or NG

OK >> GO TO 4.
NG >> Repair open circuit.

4. CHECK THROTTLE POSITION SENSOR 2 POWER SUPPLY CIRCUIT-III

Check harness for short to power and short to ground, between the following terminals.

ECM terminal	Sensor terminal	Reference Wiring Diagram
47	Electric throttle control actuator terminal 1	EC-173
91	APP sensor terminal 5	EC-394

OK or NG

OK >> GO TO 5.
NG >> Repair short to ground or short to power in harness or connectors.

5. CHECK APP SENSOR

Refer to EC-400, "Component Inspection" .

OK or NG

OK >> GO TO 11
NG >> GO TO 6.

6. REPLACE ACCELERATOR PEDAL ASSEMBLY

1. Replace accelerator pedal assembly.
2. Perform EC-69, "Accelerator Pedal Released Position Learning" .
3. Perform EC-69, "Throttle Valve Closed Position Learning" .
4. Perform EC-69, "Idle Air Volume Learning" .

>> **INSPECTION END**

7. CHECK THROTTLE POSITION SENSOR 2 GROUND CIRCUIT FOR OPEN AND SHORT

1. Turn ignition switch OFF.
2. Disconnect ECM harness connector.
3. Check harness continuity between ECM terminal 66 and electric throttle control actuator terminal 5. Refer to Wiring Diagram.

Continuity should exist.

4. Also check harness for short to ground and short to power.

OK or NG

OK >> GO TO 8.
NG >> Repair open circuit or short to ground or short to power in harness or connectors.

8. CHECK THROTTLE POSITION SENSOR 2 INPUT SIGNAL CIRCUIT FOR OPEN AND SHORT

1. Check harness continuity between ECM terminal 68 and electric throttle control actuator terminal 2. Refer to Wiring Diagram.

Continuity should exist.

2. Also check harness for short to ground and short to power.

OK or NG

OK >> GO TO 9.
NG >> Repair open circuit or short to ground or short to power in harness or connectors.

9. CHECK THROTTLE POSITION SENSOR

Refer to EC-177, "Component Inspection" .

OK or NG

OK >> GO TO 11.
NG >> GO TO 10.

10. REPLACE ELECTRIC THROTTLE CONTROL ACTUATOR

1. Replace the electric throttle control actuator.
2. Perform EC-69, "Throttle Valve Closed Position Learning" .
3. Perform EC-69, "Idle Air Volume Learning" .

>> **INSPECTION END**

11. CHECK INTERMITTENT INCIDENT

Refer to EC-127, "TROUBLE DIAGNOSIS FOR INTERMITTENT INCIDENT" .

>> **INSPECTION END**

Component Inspection

BBS002W6

THROTTLE POSITION SENSOR

1. Reconnect all harness connectors disconnected.
2. Perform EC-69, "Throttle Valve Closed Position Learning" .
3. Turn ignition switch ON.
4. Set shift lever to 1st position.
5. Check voltage between ECM terminals 49 (TP sensor 1 signal), 68 (TP sensor 2 signal) and ground under the following conditions.

Terminal	Accelerator pedal	Voltage
49 (Throttle position sensor 1)	Fully released	More than 0.36V
	Fully depressed	Less than 4.75V
68 (Throttle position sensor 2)	Fully released	Less than 4.75V
	Fully depressed	More than 0.36V

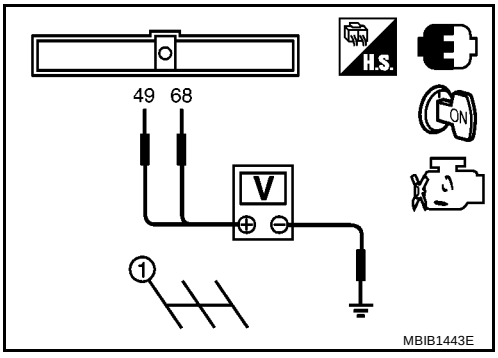

6. If NG, replace electric throttle control actuator and go to the next step.
7. Perform EC-69, "Throttle Valve Closed Position Learning" .
8. Perform EC-69, "Idle Air Volume Learning" .

Removal and Installation

BBS002W7

ELECTRIC THROTTLE CONTROL ACTUATOR

Refer to EM-18, "AIR CLEANER AND AIR DUCT" .

DTC P0132 HO2S1

PFP:22690

Component Description

BBS002W8

The heated oxygen sensor 1 is placed into the exhaust manifold. It detects the amount of oxygen in the exhaust gas compared to the outside air. The heated oxygen sensor 1 has a closed-end tube made of ceramic zirconia. The zirconia generates voltage from approximately 1V in richer conditions to 0V in leaner conditions. The heated oxygen sensor 1 signal is sent to the ECM. The ECM adjusts the injection pulse duration to achieve the ideal air-fuel ratio. The ideal air-fuel ratio occurs near the radical change from 1V to 0V.

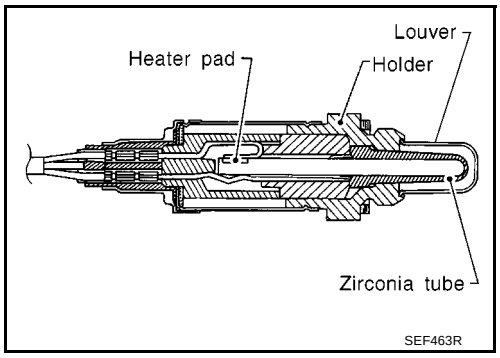

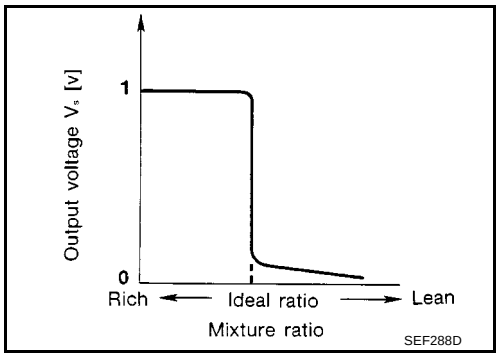

CONSULT-II Reference Value in Data Monitor Mode

BBS002W9

Specification data are reference values.

MONITOR ITEM	CONDITION		SPECIFICATION
HO2S1 (B1)	● Engine: After warming up	Maintaining engine speed at 2,000 rpm	0 - 0.3V ←→ Approx. 0.6 - 1.0V
HO2S1 MNTR (B1)			LEAN ←→ RICH Changes more than 5 times during 10 seconds.

On Board Diagnosis Logic

BBS002WA

To judge the malfunction, the diagnosis checks that the heated oxygen sensor 1 output is not inordinately high.

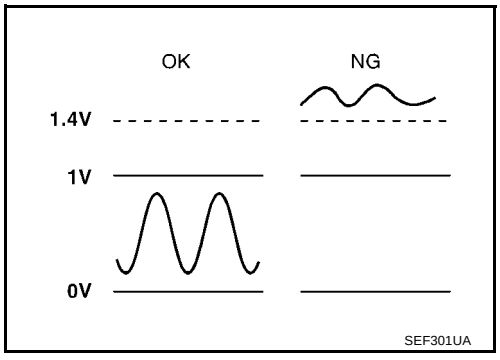

DTC No.	Trouble diagnosis name	DTC detecting condition	Possible cause
P0132 0132	Heated oxygen sensor 1 circuit high voltage	An excessively high voltage from the sensor is sent to ECM.	● Harness or connectors (The sensor circuit is open or shorted.) ● Heated oxygen sensor 1

DTC Confirmation Procedure

BBS002WB

NOTE:
If DTC Confirmation Procedure has been previously conducted, always turn ignition switch OFF and wait at least 10 seconds before conducting the next test.

WITH CONSULT-II

1. Start engine and warm it up to normal operating temperature.
2. Turn ignition switch OFF and wait at least 10 seconds.
3. Turn ignition switch ON.
4. Select “DATA MONITOR” mode with CONSULT-II.
5. Restart engine and let it idle for 2 minutes.
6. If 1st trip DTC is detected, go to EC-181, "Diagnostic Procedure"
.

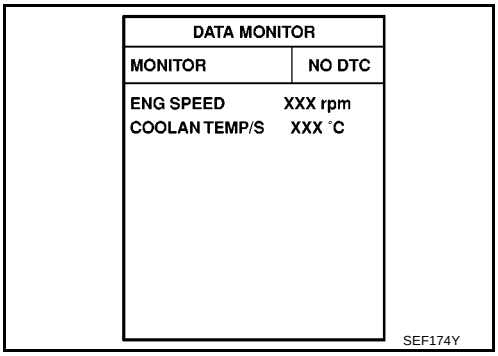

WITH GST

Follow the procedure “WITH CONSULT-II” above.

Wiring Diagram

BBS002WC

EC-HO2S1-01

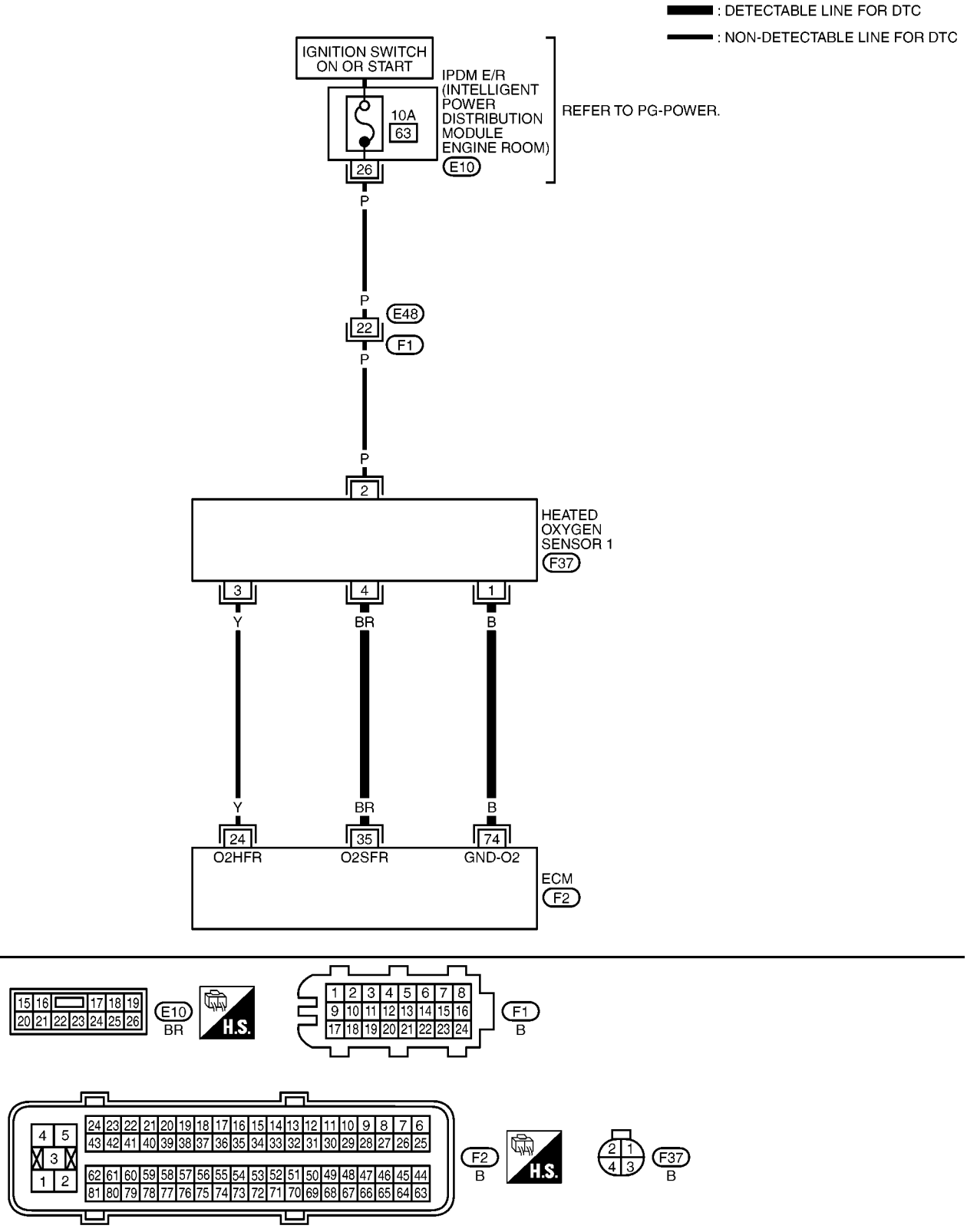

Specification data are reference values and are measured between each terminal and ground.
Pulse signal is measured by CONSULT-II.

CAUTION:
Do not use ECM ground terminals when measuring input/output voltage. Doing so may result in damage to the ECM's transistor. Use a ground other than ECM terminals, such as the ground.

TERMINAL NO.	WIRE COLOR	ITEM	CONDITION	DATA (DC Voltage)
24	Y	Heated oxygen sensor 1 heater	**[Engine is running]** ● **Warm-up condition** ● Engine speed: Below 3,600 rpm	Approximately 7.0V★ 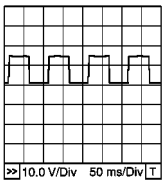 PBIB0519E
			[Engine is running] ● Engine speed: Above 3,600 rpm	BATTERY VOLTAGE (11 - 14V)
35	BR	Heated oxygen sensor 1	**[Engine is running]** ● **Warm-up condition** ● Engine speed: 2,000 rpm	0 - Approximately 1.0V (Periodically change)
74	B	Sensor ground (Heated oxygen sensor)	**[Engine is running]** ● **Warm-up condition** ● Idle speed	Approximately 0V

★: Average voltage for pulse signal (Actual pulse signal can be confirmed by oscilloscope.)

Diagnostic Procedure

BBS002WD

1. CHECK GROUND CONNECTIONS

1. Turn ignition switch OFF.
2. Loosen and retighten ground screws on the body.
   Refer to EC-133, "Ground Inspection" .

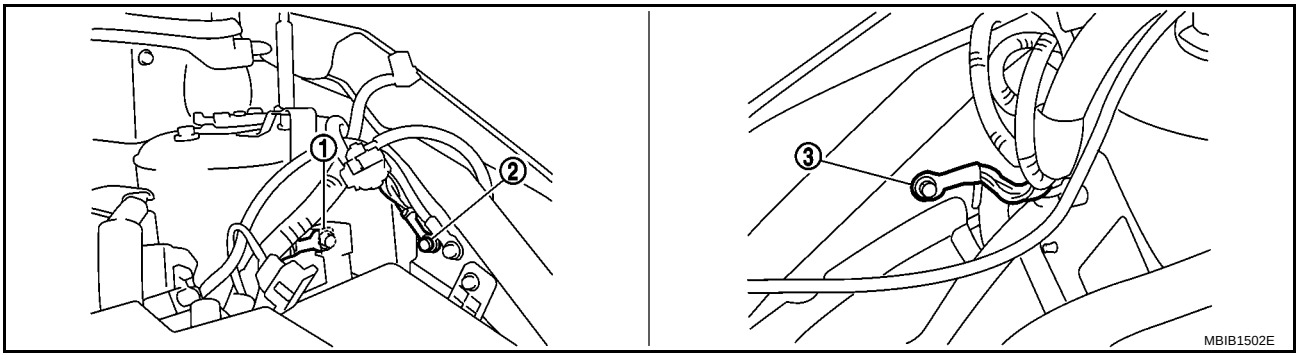

1. Body ground E44
2. Body ground E45
3. Body ground E28

OK or NG

OK >> GO TO 2.
NG >> Repair or replace ground connections.

2. RETIGHTEN HEATED OXYGEN SENSOR 1

Loosen and retighten heated oxygen sensor 1 (2).

- ⇦: Vehicle front
- Exhaust manifold cover (1)

Tightening torque: 50 N·m (5.1 kg-m, 37 ft-lb)

>> GO TO 3.

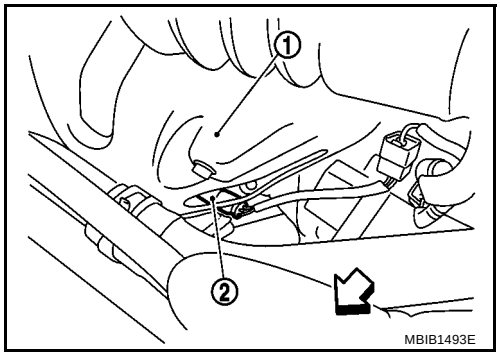

3. CHECK HO2S1 GROUND CIRCUIT FOR OPEN AND SHORT

1. Disconnect heated oxygen sensor 1 harness connector (1).
2. Disconnect ECM harness connector.
3. Check harness continuity between ECM terminal 74 and HO2S1 terminal 1.
   Refer to Wiring Diagram.

   Continuity should exist.

4. Also check harness for short to ground and short to power.

OK or NG

OK >> GO TO 4.
NG >> Repair open circuit or short to ground or short to power in harness or connectors.

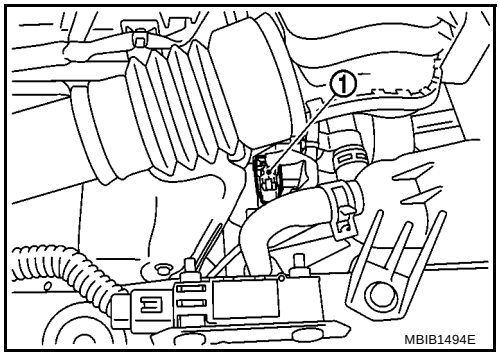

4. CHECK HO2S1 INPUT SIGNAL CIRCUIT FOR OPEN AND SHORT

1. Check harness continuity between ECM terminal 35 and HO2S1 terminal 4.
   Refer to Wiring Diagram.

   Continuity should exist.

2. Check harness continuity between ECM terminal 35 or HO2S1 terminal 4 and ground.
   Refer to Wiring Diagram.

   Continuity should not exist.

3. Also check harness for short to power.

OK or NG

OK >> GO TO 5.
NG >> Repair open circuit or short to ground or short to power in harness or connectors.

5. CHECK HO2S1 CONNECTOR FOR WATER

Check connectors for water

Water should not exist.

OK or NG

OK >> GO TO 6.
NG >> Repair or replace harness or connectors.

6. CHECK HEATED OXYGEN SENSOR 1

Refer to EC-183, "Component Inspection" .

OK or NG

OK >> GO TO 7.
NG >> Replace heated oxygen sensor 1.

7. CHECK INTERMITTENT INCIDENT

Refer to EC-127, "TROUBLE DIAGNOSIS FOR INTERMITTENT INCIDENT" .

>> **INSPECTION END**

Component Inspection

BBS002WE

HEATED OXYGEN SENSOR 1

With CONSULT-II

1. Start engine and warm it up to normal operating temperature.
2. Select “MANU TRIG” and adjust “TRIGGER POINT” to 100% in “DATA MONITOR” mode with CONSULT-II.
3. Select “HO2S1 (B1)” and “HO2S1 MNTR (B1)”.
4. Hold engine speed at 2,000 rpm under no load during the following steps.
5. Touch “RECORD” on CONSULT-II screen.

DATA MONITOR	
MONITOR	NO DTC
ENG SPEED	XXX rpm
COOLAN TEMP/S	XXX °C
HO2S1 (B1)	XXX V
HO2S1 MNTR (B1)	LEAN

MBIB0301E

6. Check the following.
   - “HO2S1 MNTR (B1)” in “DATA MONITOR” mode changes from “RICH” to “LEAN” to “RICH” more than 5 times in 10 seconds.
     5 times (cycles) are counted as shown in the figure.
   - “HO2S1 (B1)” voltage goes above 0.6V at least once.
   - “HO2S1 (B1)” voltage goes below 0.3V at least once.
   - “HO2S1 (B1)” voltage never exceeds 1.0V.

cycle	1	2	3	4	5
HO2S1 MNTR (B1)	R-L-R-L-R-L-R-L-R-L-R				

R means HO2S1 MNTR (B1) indicates RICH
L means HO2S1 MNTR (B1) indicates LEAN

SEF217YA

Trigger	ENG SPEED	HO2S1 (B1)
	rpm	V
XXX	XXX	XXX
XXX	XXX	XXX
XXX	XXX	XXX
XXX	XXX	XXX
XXX	XXX	XXX
XXX	XXX	XXX
XXX	XXX	XXX
XXX	XXX	XXX
XXX	XXX	XXX
XXX	XXX	XXX
XXX	XXX	XXX
XXX	XXX	XXX
XXX	XXX	XXX

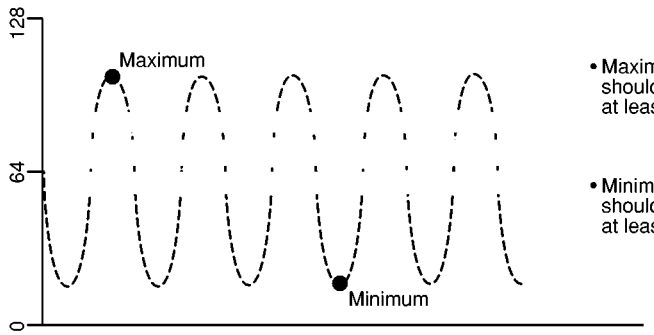

- Maximum voltage should be over 0.6V at least one time.
- Minimum voltage should be below 0.30V at least one time.

SEF648Y

CAUTION:

- **Discard any heated oxygen sensor which has been dropped from a height of more than 0.5 m (19.7 in) onto a hard surface such as a concrete floor; use a new one.**

- **Before installing new oxygen sensor, clean exhaust system threads using Oxygen Sensor Thread Cleaner and approved anti-seize lubricant.**

Without CONSULT-II

1. Start engine and warm it up to normal operating temperature.
2. Set voltmeter probes between ECM terminal 35 (HO2S1 signal) and ground.
3. Check the following with engine speed held at 2,000 rpm constant under no load.
   - The voltage fluctuates between 0 to 0.3V and 0.6 to 1.0V more than 5 times within 10 seconds.
   - The maximum voltage is over 0.6V at least one time.
   - The minimum voltage is below 0.3V at least one time.
   - The voltage never exceeds 1.0V.

   1 time: 0 - 0.3V → 0.6 - 1.0V → 0 - 0.3V
   2 times: 0 - 0.3V → 0.6 - 1.0V → 0 - 0.3V → 0.6 - 1.0V → 0 - 0.3V

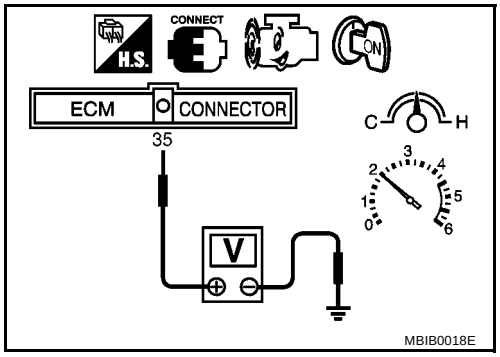

CAUTION:

- **Discard any heated oxygen sensor which has been dropped from a height of more than 0.5 m (19.7 in) onto a hard surface such as a concrete floor; use a new one.**
- **Before installing new oxygen sensor, clean exhaust system threads using Oxygen Sensor Thread Cleaner and approved anti-seize lubricant.**

Removal and Installation

BBS002WF

HEATED OXYGEN SENSOR 1

Refer to EM-24, "EXHAUST MANIFOLD AND THREE WAY CATALYST" .

DTC P0133 HO2S1

PFP:22690

Component Description

BBS002WG

The heated oxygen sensor 1 is placed into the exhaust manifold. It detects the amount of oxygen in the exhaust gas compared to the outside air. The heated oxygen sensor 1 has a closed-end tube made of ceramic zirconia. The zirconia generates voltage from approximately 1V in richer conditions to 0V in leaner conditions. The heated oxygen sensor 1 signal is sent to the ECM. The ECM adjusts the injection pulse duration to achieve the ideal air-fuel ratio. The ideal air-fuel ratio occurs near the radical change from 1V to 0V.

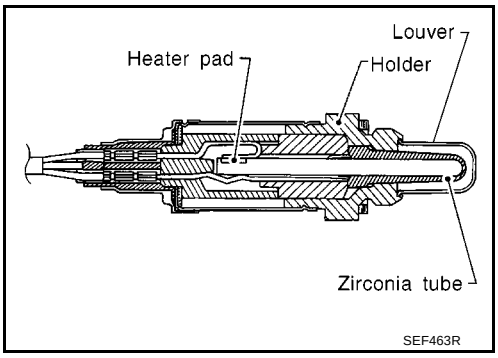

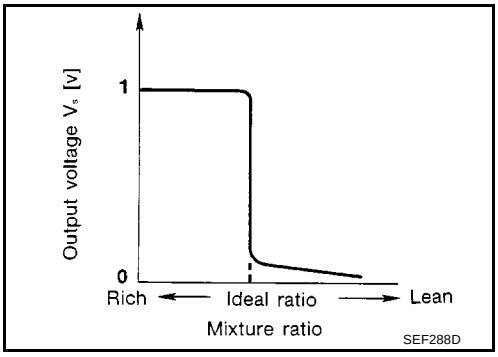

CONSULT-II Reference Value in Data Monitor Mode

BBS002WH

Specification data are reference values.

MONITOR ITEM	CONDITION		SPECIFICATION
HO2S1 (B1)	● Engine: After warming up	Maintaining engine speed at 2,000 rpm	0 - 0.3V ←→ Approx. 0.6 - 1.0V
HO2S1 MNTR (B1)			LEAN ←→ RICH Changes more than 5 times during 10 seconds.

On Board Diagnosis Logic

BBS002WI

To judge the malfunction of heated oxygen sensor 1, this diagnosis measures response time of heated oxygen sensor 1 signal. The time is compensated by engine operating (speed and load), fuel feedback control constant, and heated oxygen sensor 1 temperature index. Judgment is based on whether the compensated time (heated oxygen sensor 1 cycling time index) is inordinately long or not.

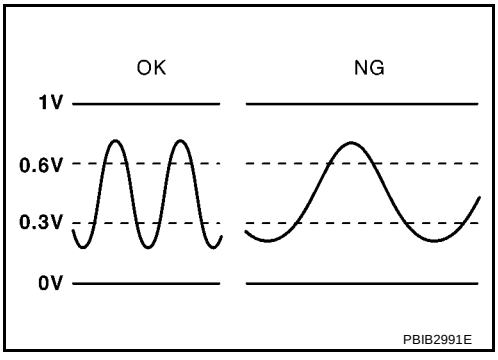

DTC No.	Trouble diagnosis name	DTC detecting condition	Possible cause
P0133 0133	Heated oxygen sensor 1 circuit slow response	The response of the voltage signal from the sensor takes more than the specified time.	● Harness or connectors (The sensor circuit is open or shorted.) ● Heated oxygen sensor 1 ● Fuel pressure ● Fuel injector ● Intake air leak ● Exhaust gas leak ● Manifold absolute pressure sensor

DTC Confirmation Procedure

BBS002WJ

CAUTION:
Always drive vehicle at a safe speed.

NOTE:
If DTC Confirmation Procedure has been previously conducted, always turn ignition switch OFF and wait at least 10 seconds before conducting the next test.

TESTING CONDITION:

- **Always perform at a temperature above –10°C (14°F).**
- **Before performing the following procedure, confirm that battery voltage is more than 11V at idle.**

WITH CONSULT-II

1. Start engine and warm it up to normal operating temperature.
2. Stop engine and wait at least 10 seconds.
3. Turn ignition switch ON and select “HO2S1 (B1) P0133” of “HO2S1” in “DTC WORK SUPPORT” mode with CONSULT-II.
4. Touch “START”.
5. Start engine and let it idle for at least 3 minutes.

   NOTE:
   Never raise engine speed above 3,600 rpm after this step. If the engine speed limit is exceeded, return to step 5.

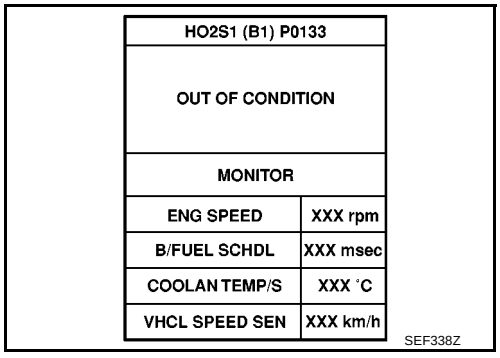

6. When the following conditions are met, “TESTING” will be displayed on the CONSULT-II screen. Maintain the conditions continuously until “TESTING” changes to “COMPLETED”. (It will take approximately 40 to 60 seconds.)

ENG SPEED	2,400 - 3,800 rpm
VHCL SPEED SE	More than 80 km/h (50 MPH)
B/FUEL SCHDL	2.8 - 7.0 msec
Shift lever	Suitable position

   If “TESTING” is not displayed after 5 minutes, retry from step 2.

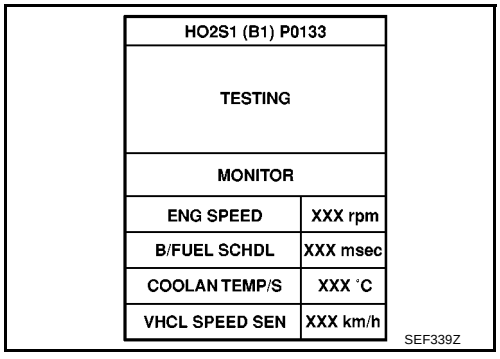

7. Make sure that “OK” is displayed after touching “SELF-DIAG RESULTS”. If “NG” is displayed, refer to EC-189, "Diagnostic Procedure" .

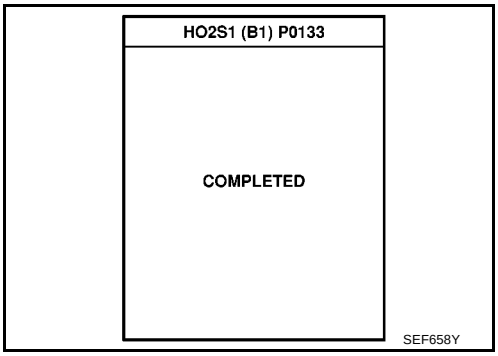

Overall Function Check

BBS002WK

Use this procedure to check the overall function of the heated oxygen sensor 1 circuit. During this check, a 1st trip DTC might not be confirmed.

WITH GST

1. Start engine and warm it up to normal operating temperature.
2. Set voltmeter probes between ECM terminal 35 (HO2S1 signal) and ground.
3. Check the following with engine speed held at 2,000 rpm constant under no load.

- The voltage fluctuates between 0 to 0.3V and 0.6 to 1.0V more than 5 times within 10 seconds.

1 time: **0 - 0.3V → 0.6 - 1.0V → 0 - 0.3V**

2 times: **0 - 0.3V → 0.6 - 1.0V → 0 - 0.3V → 0.6 - 1.0V → 0 - 0.3V**

4. If NG, go to EC-189, "Diagnostic Procedure" .

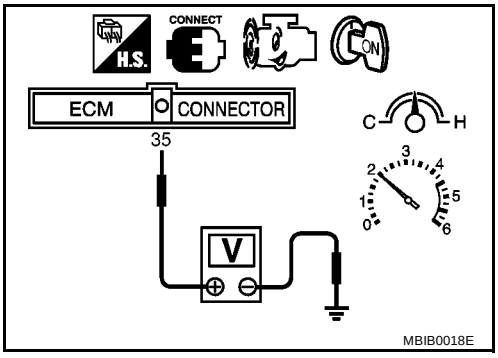

Wiring Diagram

BBS002WL

EC-HO2S1-01

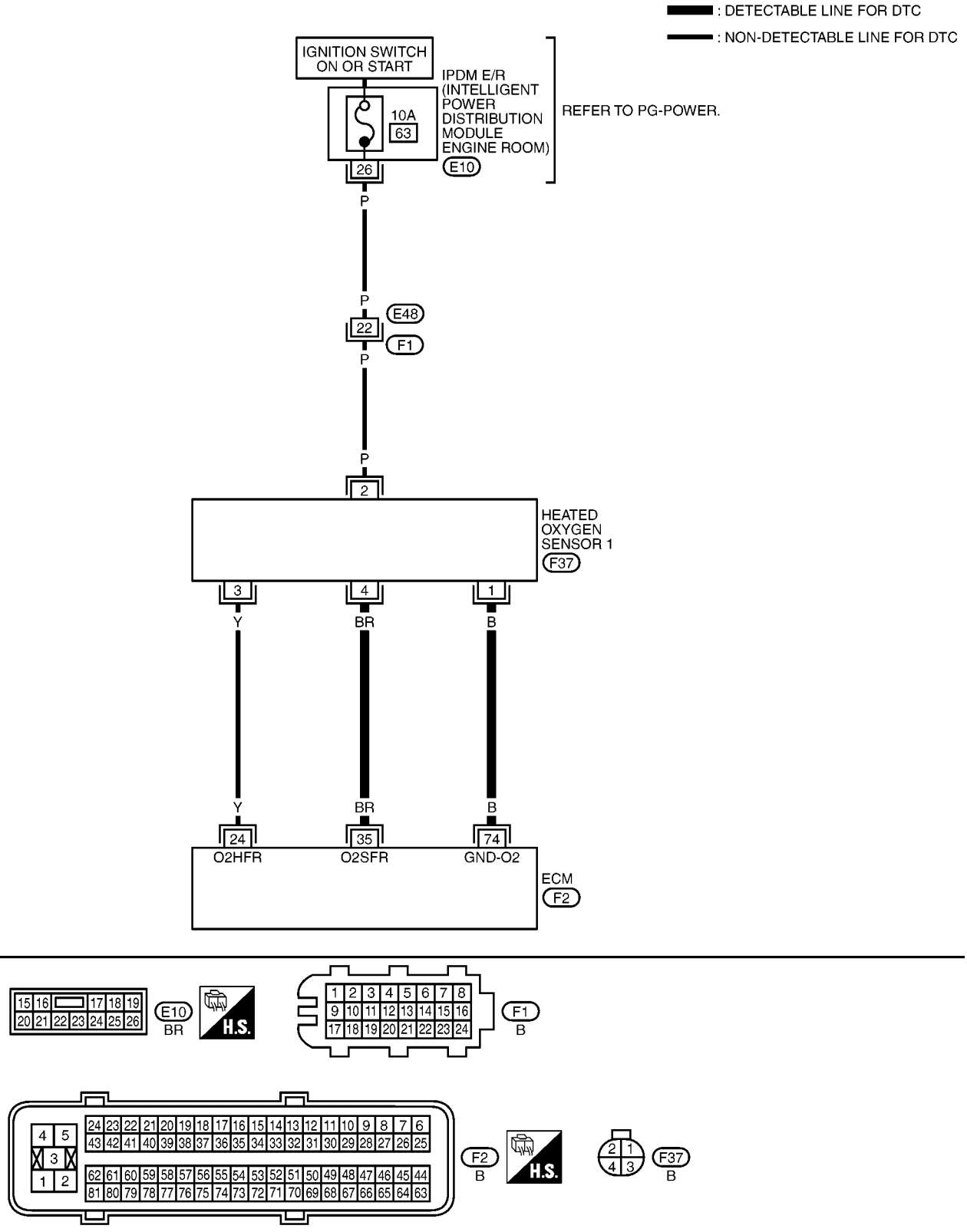

Specification data are reference values and are measured between each terminal and ground.
Pulse signal is measured by CONSULT-II.

CAUTION:
Do not use ECM ground terminals when measuring input/output voltage. Doing so may result in damage to the ECM's transistor. Use a ground other than ECM terminals, such as the ground.

TERMINAL NO.	WIRE COLOR	ITEM	CONDITION	DATA (DC Voltage)
24	Y	Heated oxygen sensor 1 heater	**[Engine is running]** ● **Warm-up condition** ● Engine speed: Below 3,600 rpm	Approximately 7.0V★ 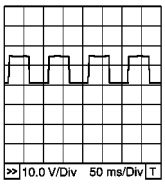 PBIB0519E
			[Engine is running] ● Engine speed: Above 3,600 rpm	BATTERY VOLTAGE (11 - 14V)
35	BR	Heated oxygen sensor 1	**[Engine is running]** ● **Warm-up condition** ● Engine speed: 2,000 rpm	0 - Approximately 1.0V (Periodically change)
74	B	Sensor ground (Heated oxygen sensor)	**[Engine is running]** ● **Warm-up condition** ● Idle speed	Approximately 0V

★: Average voltage for pulse signal (Actual pulse signal can be confirmed by oscilloscope.)

Diagnostic Procedure

BBS002WM

1. CHECK GROUND CONNECTIONS

1. Turn ignition switch OFF.
2. Loosen and retighten ground screws on the body.
   Refer to EC-133, "Ground Inspection" .

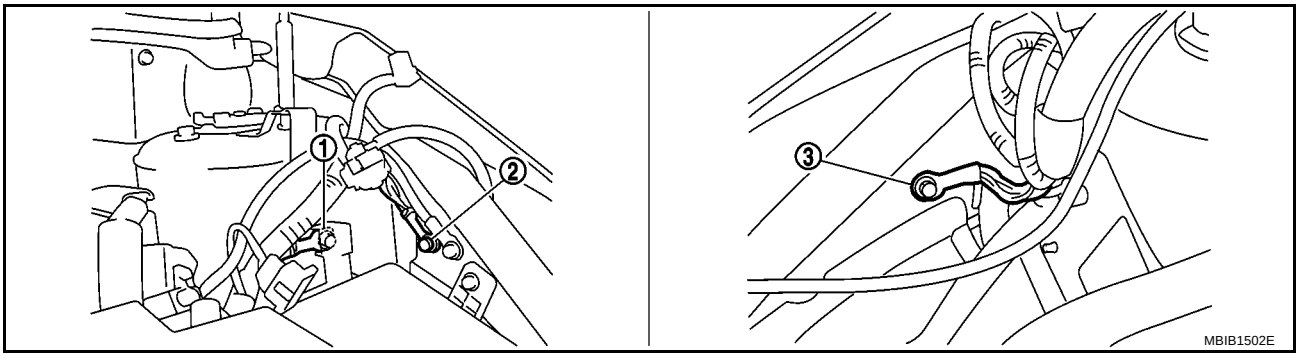

1. Body ground E44
2. Body ground E45
3. Body ground E28

OK or NG

OK >> GO TO 2.
NG >> Repair or replace ground connections.

2. RETIGHTEN HEATED OXYGEN SENSOR 1

Loosen and retighten heated oxygen sensor 1 (2).

- ⇦: Vehicle front
- Exhaust manifold cover (1)

Tightening torque: 50 N·m (5.1 kg-m, 37 ft-lb)

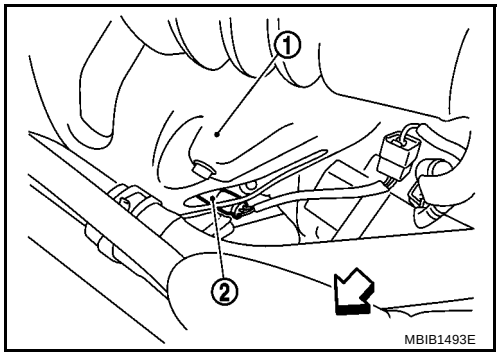

>> GO TO 3.

3. CHECK FOR EXHAUST GAS LEAK

1. Start engine and run it at idle.
2. Listen for an exhaust gas leak before three way catalyst (Manifold).

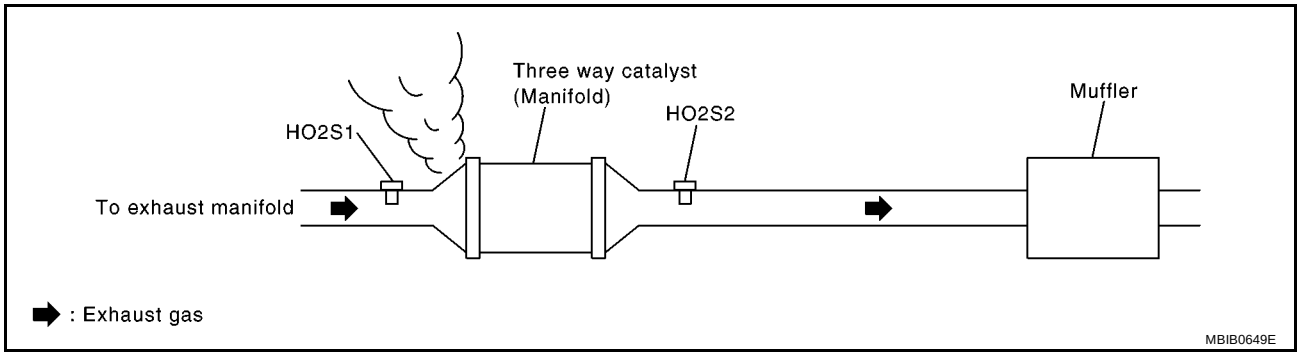

OK or NG

OK >> GO TO 4.
NG >> Repair or replace.

4. CHECK FOR INTAKE AIR LEAK

Listen for an intake air leak after the manifold absolute pressure sensor.

OK or NG

OK >> GO TO 5.
NG >> Repair or replace.

5. CLEAR THE SELF-LEARNING DATA

With CONSULT-II

1. Start engine and warm it up to normal operating temperature.
2. Select “SELF-LEARNING CONT” in “WORK SUPPORT” mode with CONSULT-II.
3. Clear the self-learning control coefficient by touching “CLEAR”.
4. Run engine for at least 10 minutes at idle speed.
   Is the 1st trip DTC P0171 or P0172 detected?
   Is it difficult to start engine?

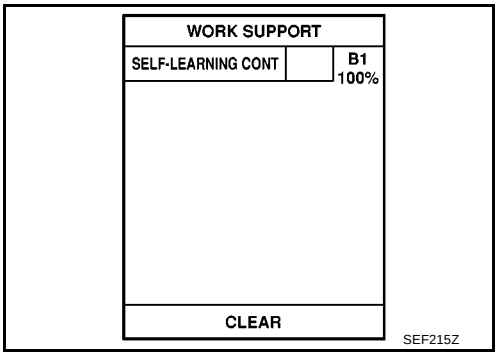

Without CONSULT-II

1. Start engine and warm it up to normal operating temperature.
2. Turn ignition switch OFF.
3. Disconnect manifold absolute pressure sensor harness connector, and restart and run engine for at least 5 seconds at idle speed.
4. Stop engine and reconnect manifold absolute pressure sensor harness connector.
5. Make sure that DTC P0107 is displayed.
6. Erase the DTC memory. Refer to EC-57, "HOW TO ERASE EMISSION-RELATED DIAGNOSTIC INFORMATION" .
7. Make sure that DTC P0000 is displayed.
8. Run engine for at least 10 minutes at idle speed.
   Is the 1st trip DTC P0171 or P0172 detected?
   Is it difficult to start engine?

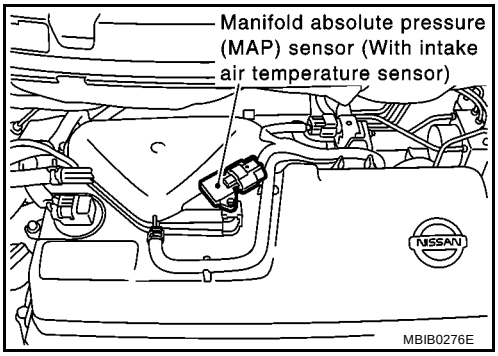

Yes or No

Yes >> Perform trouble diagnosis for DTC P0171 or DTC P0172 (Refer to EC-218 or EC-226).
No >> GO TO 6.

6. CHECK HO2S1 GROUND CIRCUIT FOR OPEN AND SHORT

1. Turn ignition switch OFF.
2. Disconnect heated oxygen sensor 1 harness connector (1).
3. Disconnect ECM harness connector.
4. Check harness continuity between ECM terminal 74 and HO2S1 terminal 1. Refer to Wiring Diagram.

   Continuity should exist.

5. Also check harness for short to ground and short to power.

OK or NG

OK >> GO TO 7.
NG >> Repair open circuit or short to ground or short to power in harness or connectors.

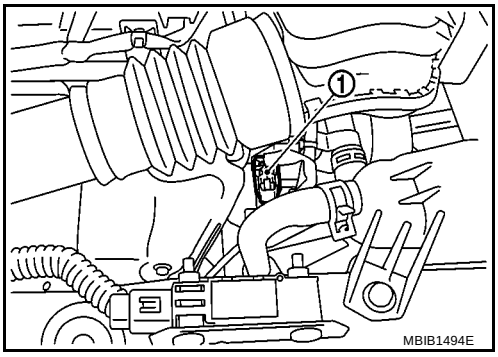

7. CHECK HO2S1 INPUT SIGNAL CIRCUIT FOR OPEN AND SHORT

1. Check harness continuity between ECM terminal 35 and HO2S1 terminal 4.
   Refer to Wiring Diagram.

   Continuity should exist.

2. Check harness continuity between ECM terminal 35 or HO2S1 terminal 4 and ground.
   Refer to Wiring Diagram.

   Continuity should not exist.

3. Also check harness for short to power.

OK or NG

OK >> GO TO 8.
NG >> Repair open circuit or short to ground or short to power in harness or connectors.

8. CHECK MANIFOLD ABSOLUTE PRESSURE SENSOR

Refer to EC-159, "Component Inspection" .

OK or NG

OK >> GO TO 9.
NG >> Replace manifold absolute pressure sensor.

9. CHECK PCV VALVE

Refer to EC-45, "Component Inspection" .

OK or NG

OK >> GO TO 10.
NG >> Replace PCV valve.

10. CHECK HEATED OXYGEN SENSOR 1

Refer to EC-193, "Component Inspection" .

OK or NG

OK >> GO TO 11.
NG >> Replace heated oxygen sensor 1.

11. CHECK INTERMITTENT INCIDENT

Refer to EC-127, "TROUBLE DIAGNOSIS FOR INTERMITTENT INCIDENT" .

>> **INSPECTION END**

Component Inspection

BBS002WN

HEATED OXYGEN SENSOR 1

With CONSULT-II

1. Start engine and warm it up to normal operating temperature.
2. Select “MANU TRIG” and adjust “TRIGGER POINT” to 100% in “DATA MONITOR” mode with CONSULT-II.
3. Select “HO2S1 (B1)” and “HO2S1 MNTR (B1)”.
4. Hold engine speed at 2,000 rpm under no load during the following steps.
5. Touch “RECORD” on CONSULT-II screen.

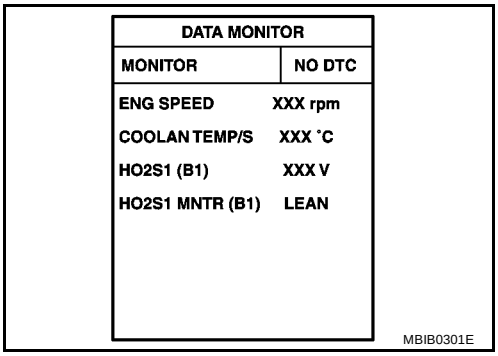

6. Check the following.
   - “HO2S1 MNTR (B1)” in “DATA MONITOR” mode changes from “RICH” to “LEAN” to “RICH” more than 5 times in 10 seconds.
     5 times (cycles) are counted as shown in the figure.
   - “HO2S1 (B1)” voltage goes above 0.6V at least once.
   - “HO2S1 (B1)” voltage goes below 0.3V at least once.
   - “HO2S1 (B1)” voltage never exceeds 1.0V.

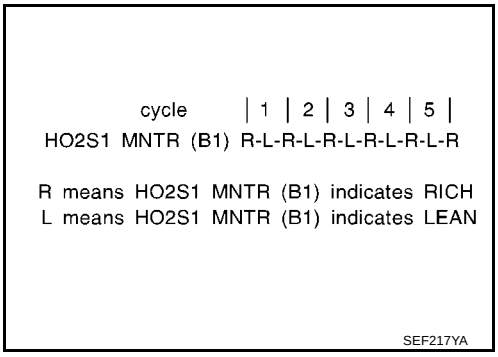

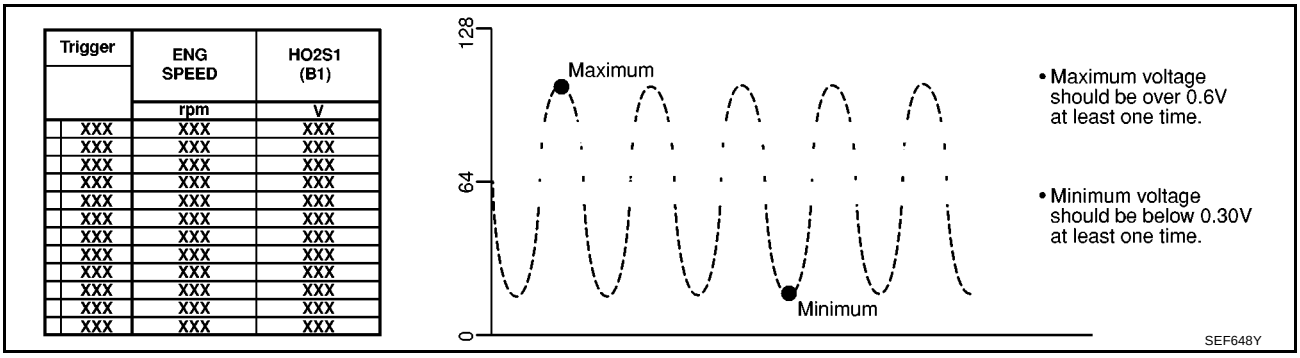

CAUTION:

- **Discard any heated oxygen sensor which has been dropped from a height of more than 0.5 m (19.7 in) onto a hard surface such as a concrete floor; use a new one.**
- **Before installing new oxygen sensor, clean exhaust system threads using Oxygen Sensor Thread Cleaner and approved anti-seize lubricant.**

Without CONSULT-II

1. Start engine and warm it up to normal operating temperature.
2. Set voltmeter probes between ECM terminal 35 (HO2S1 signal) and ground.
3. Check the following with engine speed held at 2,000 rpm constant under no load.
   - The voltage fluctuates between 0 to 0.3V and 0.6 to 1.0V more than 5 times within 10 seconds.
   - The maximum voltage is over 0.6V at least one time.
   - The minimum voltage is below 0.3V at least one time.
   - The voltage never exceeds 1.0V.

   1 time: 0 - 0.3V → 0.6 - 1.0V → 0 - 0.3V
   2 times: 0 - 0.3V → 0.6 - 1.0V → 0 - 0.3V → 0.6 - 1.0V → 0 - 0.3V

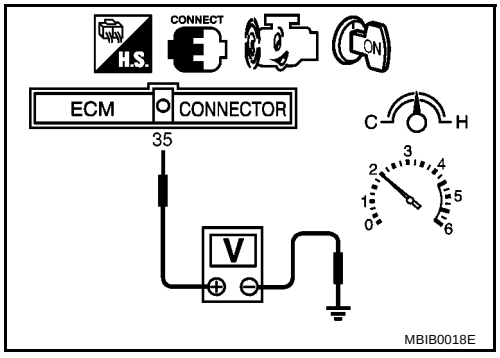

CAUTION:

- **Discard any heated oxygen sensor which has been dropped from a height of more than 0.5 m (19.7 in) onto a hard surface such as a concrete floor; use a new one.**
- **Before installing new oxygen sensor, clean exhaust system threads using Oxygen Sensor Thread Cleaner and approved anti-seize lubricant.**

Removal and Installation

BBS002WO

HEATED OXYGEN SENSOR 1

Refer to EM-24, "EXHAUST MANIFOLD AND THREE WAY CATALYST" .

DTC P0134 HO2S1

PFP:22690

Component Description

BBS002WP

The heated oxygen sensor 1 is placed into the exhaust manifold. It detects the amount of oxygen in the exhaust gas compared to the outside air. The heated oxygen sensor 1 has a closed-end tube made of ceramic zirconia. The zirconia generates voltage from approximately 1V in richer conditions to 0V in leaner conditions. The heated oxygen sensor 1 signal is sent to the ECM. The ECM adjusts the injection pulse duration to achieve the ideal air-fuel ratio. The ideal air-fuel ratio occurs near the radical change from 1V to 0V.

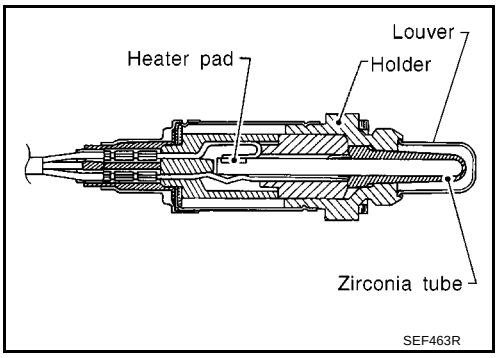

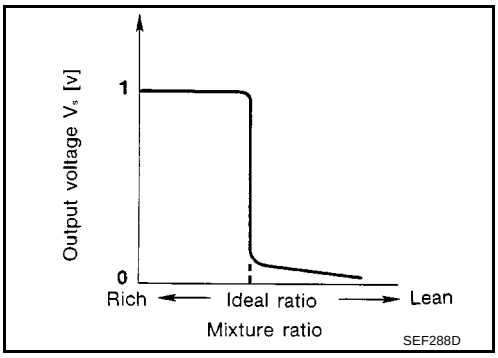

CONSULT-II Reference Value in Data Monitor Mode

BBS002WQ

Specification data are reference values.

MONITOR ITEM	CONDITION		SPECIFICATION
HO2S1 (B1)	● Engine: After warming up	Maintaining engine speed at 2,000 rpm	0 - 0.3V ←→ Approx. 0.6 - 1.0V
HO2S1 MNTR (B1)			LEAN ←→ RICH Changes more than 5 times during 10 seconds.

On Board Diagnosis Logic

BBS002WR

Under the condition in which the heated oxygen sensor 1 signal is not input, the ECM circuits will read a continuous approximately 0.3V. Therefore, for this diagnosis, the time that output voltage is within 200 to 400 mV range is monitored, and the diagnosis checks that this time is not inordinately long.

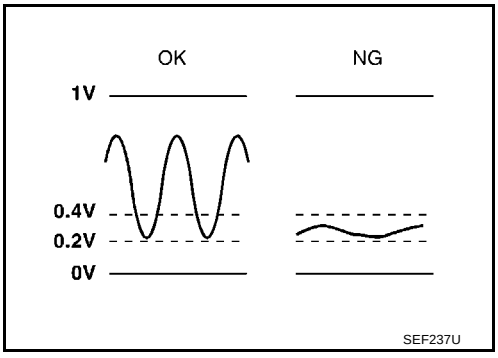

DTC No.	Trouble diagnosis name	DTC detecting condition	Possible cause
P0134 0134	Heated oxygen sensor 1 circuit no activity detected	The voltage from the sensor is constantly approx. 0.3V.	● Harness or connectors (The sensor circuit is open or shorted.) ● Heated oxygen sensor 1

DTC Confirmation Procedure

BBS002WS

CAUTION:
Always drive vehicle at a safe speed.

NOTE:
If DTC Confirmation Procedure has been previously conducted, always turn ignition switch OFF and wait at least 10 seconds before conducting the next test.

TESTING CONDITION:
Before performing the following procedure, confirm that battery voltage is more than 11V at idle.

WITH CONSULT-II

1. Start engine and warm it up to normal operating temperature.
2. Select “HO2S1 (B1) P0134” of “HO2S1” in “DTC WORK SUPPORT” mode with CONSULT-II.
3. Touch “START”.
4. Let it idle for at least 3 minutes.

   NOTE:
   Never raise engine speed above 3,600 rpm after this step. If the engine speed limit is exceeded, return to step 4.

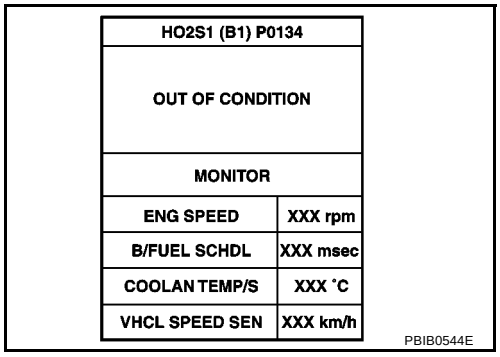

5. When the following conditions are met, “TESTING” will be displayed on the CONSULT-II screen. Maintain the conditions continuously until “TESTING” changes to “COMPLETED”. (It will take approximately 10 to 60 seconds.)

ENG SPEED	2,100 - 4,100 rpm
VHCL SPEED SE	More than 64 km/h (40 MPH)
B/FUEL SCHDL	2.0 - 7.8 msec
Shift lever	Suitable position

   If “TESTING” is not displayed after 5 minutes, retry from step 2.

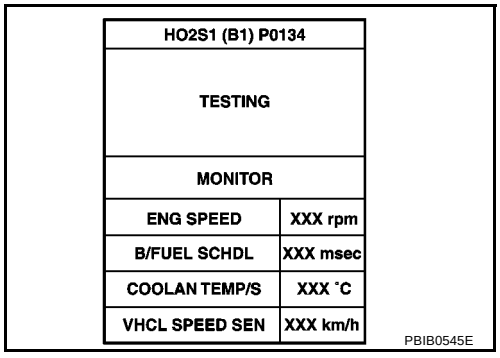

6. Make sure that “OK” is displayed after touching “SELF-DIAG RESULTS”. If “NG” is displayed, refer to EC-199, "Diagnostic Procedure" .

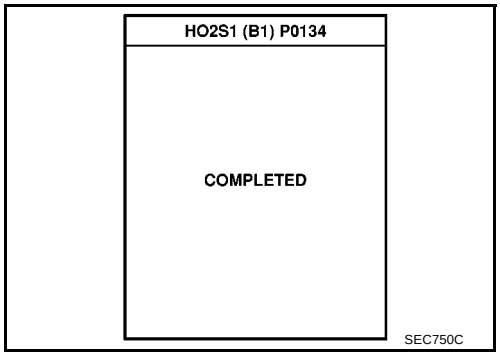

Overall Function Check

BBS002WT

Use this procedure to check the overall function of the heated oxygen sensor 1 circuit. During this check, a 1st trip DTC might not be confirmed.

WITH GST

1. Start engine and warm it up to normal operating temperature.
2. Set voltmeter probes between ECM terminal 35 (HO2S1 signal) and ground.
3. Check the following with engine speed held at 2,000 rpm constant under no load.

- The voltage does not remain in the range of 0.2 to 0.4V.

4. If NG, go to EC-199, "Diagnostic Procedure" .

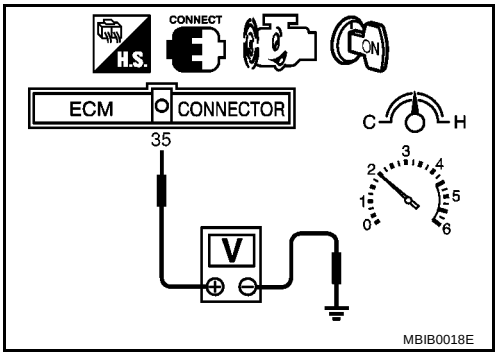

Wiring Diagram

BBS002WU

EC-HO2S1-01

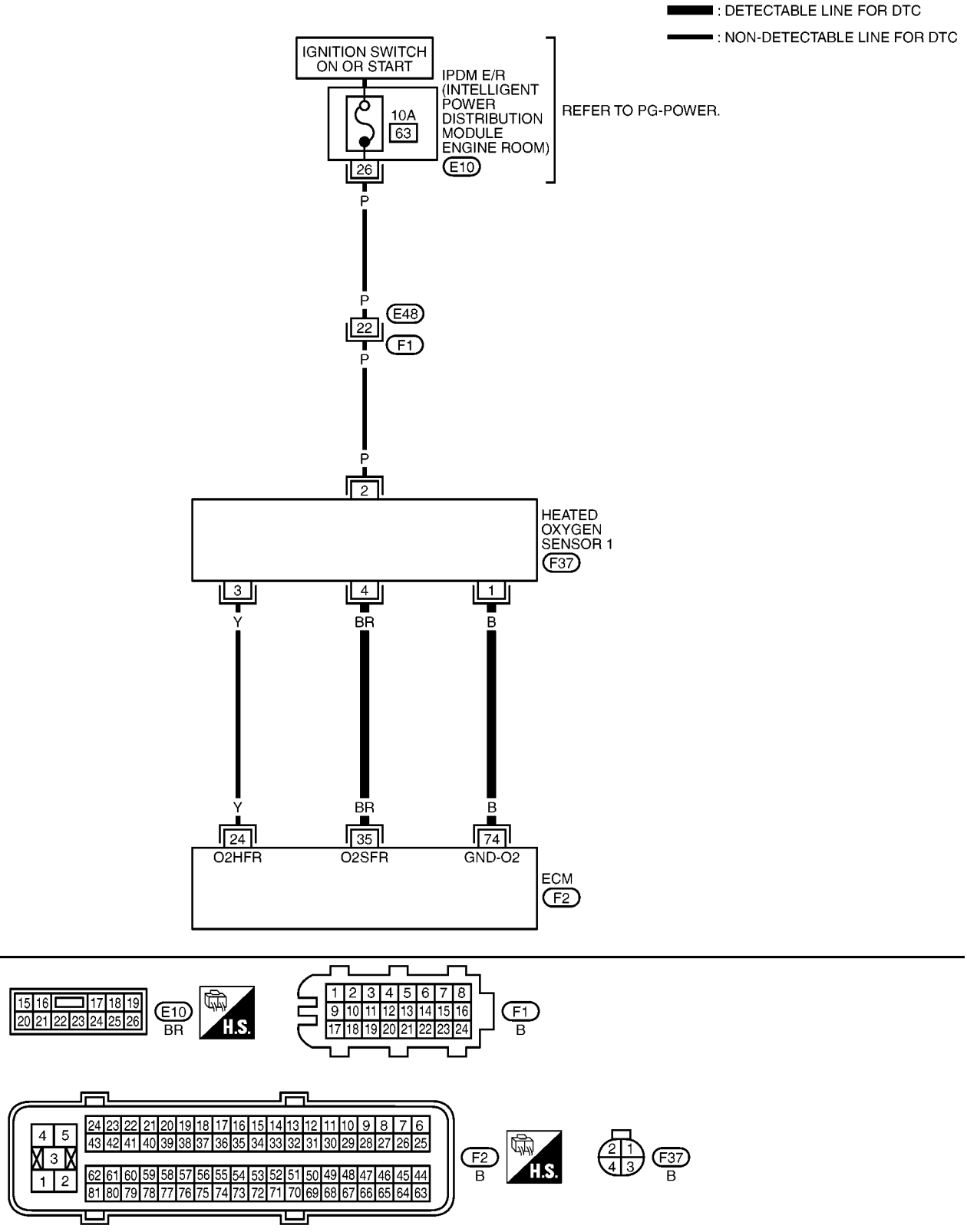

Specification data are reference values and are measured between each terminal and ground.
Pulse signal is measured by CONSULT-II.

CAUTION:
Do not use ECM ground terminals when measuring input/output voltage. Doing so may result in damage to the ECM's transistor. Use a ground other than ECM terminals, such as the ground.

TERMINAL NO.	WIRE COLOR	ITEM	CONDITION	DATA (DC Voltage)
24	Y	Heated oxygen sensor 1 heater	**[Engine is running]** ● **Warm-up condition** ● Engine speed: Below 3,600 rpm	Approximately 7.0V★ 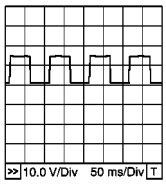 PBIB0519E
			[Engine is running] ● Engine speed Above 3,600 rpm	BATTERY VOLTAGE (11 - 14V)
35	BR	Heated oxygen sensor 1	**[Engine is running]** ● **Warm-up condition** ● Engine speed: 2,000 rpm	0 - Approximately 1.0V (Periodically change)
74	B	Sensor ground (Heated oxygen sensor)	**[Engine is running]** ● **Warm-up condition** ● Idle speed	Approximately 0V

★: Average voltage for pulse signal (Actual pulse signal can be confirmed by oscilloscope.)

Diagnostic Procedure

BBS002WV

1. CHECK GROUND CONNECTIONS

1. Turn ignition switch OFF.
2. Loosen and retighten ground screws on the body.
   Refer to EC-133, "Ground Inspection" .

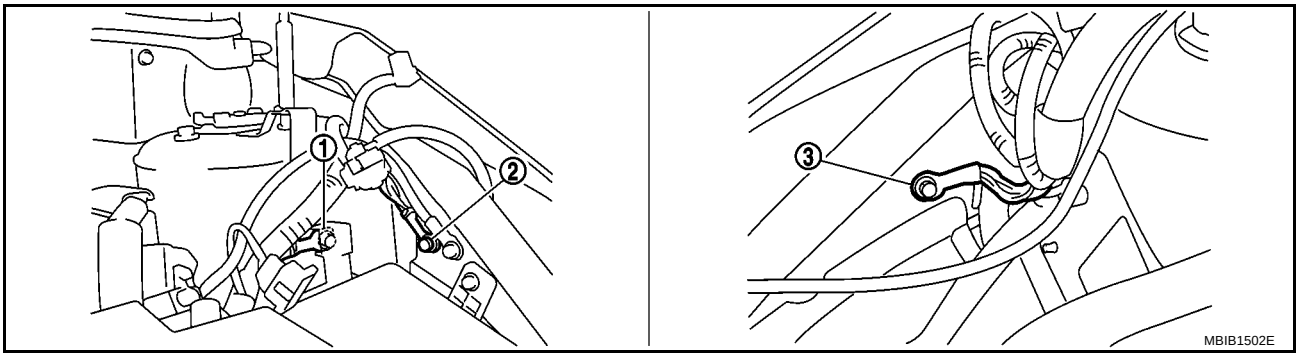

1. Body ground E44
2. Body ground E45
3. Body ground E28

OK or NG

OK >> GO TO 2.
NG >> Repair or replace ground connections.

2. CHECK HO2S1 GROUND CIRCUIT FOR OPEN AND SHORT

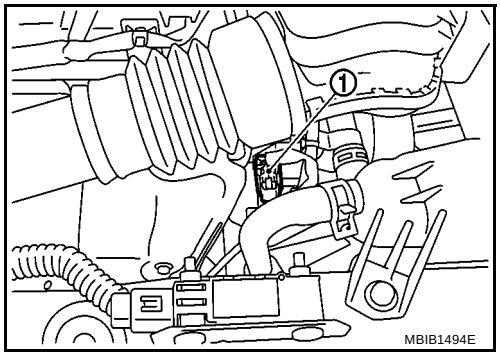

1. Disconnect heated oxygen sensor 1 harness connector (1).
2. Disconnect ECM harness connector.
3. Check harness continuity between ECM terminal 74 and HO2S1 terminal 1. Refer to Wiring Diagram.

   Continuity should exist.

4. Also check harness for short to ground and short to power.

OK or NG

OK >> GO TO 3.
NG >> Repair open circuit or short to ground or short to power in harness or connectors.

3. CHECK HO2S1 INPUT SIGNAL CIRCUIT FOR OPEN AND SHORT

1. Check harness continuity between ECM terminal 35 and HO2S1 terminal 4. Refer to Wiring Diagram.

   Continuity should exist.

2. Check harness continuity between ECM terminal 35 or HO2S1 terminal 4 and ground. Refer to Wiring Diagram.

   Continuity should not exist.

3. Also check harness for short to power.

OK or NG

OK >> GO TO 4.
NG >> Repair open circuit or short to ground or short to power in harness or connectors.

4. CHECK HEATED OXYGEN SENSOR 1

Refer to EC-201, "Component Inspection" .

OK or NG

OK >> GO TO 5.
NG >> Replace heated oxygen sensor 1.

5. CHECK INTERMITTENT INCIDENT

Refer to EC-127, "TROUBLE DIAGNOSIS FOR INTERMITTENT INCIDENT" .

>> **INSPECTION END**

Component Inspection

BBS002WW

HEATED OXYGEN SENSOR 1

With CONSULT-II

1. Start engine and warm it up to normal operating temperature.
2. Select “MANU TRIG” and adjust “TRIGGER POINT” to 100% in “DATA MONITOR” mode with CONSULT-II.
3. Select “HO2S1 (B1)” and “HO2S1 MNTR (B1)”.
4. Hold engine speed at 2,000 rpm under no load during the following steps.
5. Touch “RECORD” on CONSULT-II screen.

DATA MONITOR	
MONITOR	NO DTC
ENG SPEED	XXX rpm
COOLAN TEMP/S	XXX °C
HO2S1 (B1)	XXX V
HO2S1 MNTR (B1)	LEAN

MBIB0301E

6. Check the following.
   - “HO2S1 MNTR (B1)” in “DATA MONITOR” mode changes from “RICH” to “LEAN” to “RICH” more than 5 times in 10 seconds.
     5 times (cycles) are counted as shown in the figure.
   - “HO2S1 (B1)” voltage goes above 0.6V at least once.
   - “HO2S1 (B1)” voltage goes below 0.3V at least once.
   - “HO2S1 (B1)” voltage never exceeds 1.0V.

cycle	1	2	3	4	5
HO2S1 MNTR (B1)	R-L-R-L-R-L-R-L-R-L-R				

R means HO2S1 MNTR (B1) indicates RICH
L means HO2S1 MNTR (B1) indicates LEAN

SEF217YA

Trigger	ENG SPEED	HO2S1 (B1)
	rpm	V
XXX	XXX	XXX
XXX	XXX	XXX
XXX	XXX	XXX
XXX	XXX	XXX
XXX	XXX	XXX
XXX	XXX	XXX
XXX	XXX	XXX
XXX	XXX	XXX
XXX	XXX	XXX
XXX	XXX	XXX
XXX	XXX	XXX
XXX	XXX	XXX

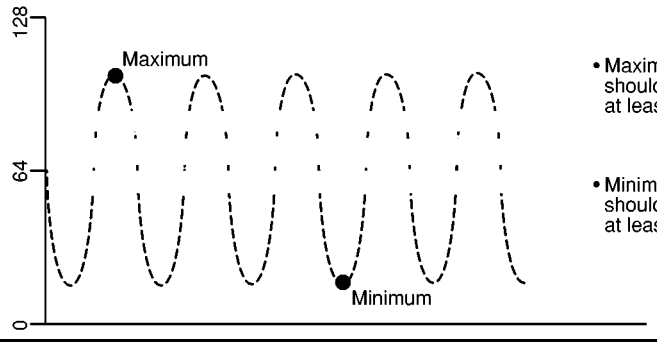

CAUTION:

- **Discard any heated oxygen sensor which has been dropped from a height of more than 0.5 m (19.7 in) onto a hard surface such as a concrete floor; use a new one.**
- **Before installing new oxygen sensor, clean exhaust system threads using Oxygen Sensor Thread Cleaner and approved anti-seize lubricant.**

Without CONSULT-II

1. Start engine and warm it up to normal operating temperature.
2. Set voltmeter probes between ECM terminal 35 (HO2S1 signal) and ground.

3. Check the following with engine speed held at 2,000 rpm constant under no load.
   - The voltage fluctuates between 0 to 0.3V and 0.6 to 1.0V more than 5 times within 10 seconds.
   - The maximum voltage is over 0.6V at least one time.
   - The minimum voltage is below 0.3V at least one time.
   - The voltage never exceeds 1.0V.

   1 time: 0 - 0.3V → 0.6 - 1.0V → 0 - 0.3V
   2 times: 0 - 0.3V → 0.6 - 1.0V → 0 - 0.3V → 0.6 - 1.0V → 0 - 0.3V

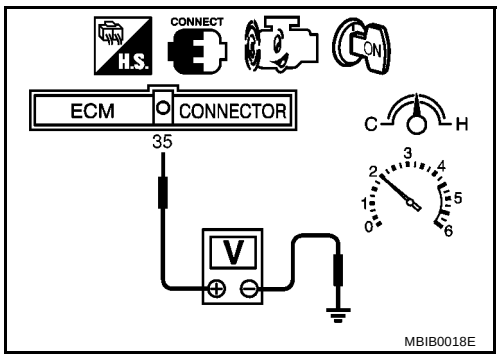

CAUTION:

- **Discard any heated oxygen sensor which has been dropped from a height of more than 0.5 m (19.7 in) onto a hard surface such as a concrete floor; use a new one.**
- **Before installing new oxygen sensor, clean exhaust system threads using Oxygen Sensor Thread Cleaner and approved anti-seize lubricant.**

Removal and Installation

BBS002WX

HEATED OXYGEN SENSOR 1

Refer to EM-24, "EXHAUST MANIFOLD AND THREE WAY CATALYST" .

DTC P0138 HO2S2

PFP:226A0

Component Description

BBS002WY

The heated oxygen sensor 2, after three way catalyst (manifold), monitors the oxygen level in the exhaust gas.
Even if switching characteristics of the heated oxygen sensor 1 are shifted, the air-fuel ratio is controlled to stoichiometric, by the signal from the heated oxygen sensor 2.
This sensor is made of ceramic zirconia. The zirconia generates voltage from approximately 1V in richer conditions to 0V in leaner conditions.
Under normal conditions the heated oxygen sensor 2 is not used for engine control operation.

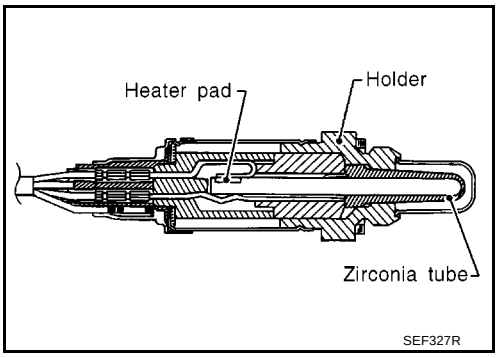

CONSULT-II Reference Value in Data Monitor Mode

BBS002WZ

Specification data are reference values.

MONITOR ITEM	CONDITION	SPECIFICATION
HO2S2 (B1)	● Revving engine from idle to 3,000 rpm quickly after the following conditions are met. – Engine: After warming up – Keeping the engine speed between 3,500 and 4,000 rpm for 1 minute and at idle for 1 minute under no load.	0 - 0.3V ←→ Approx. 0.6 - 1.0V
HO2S2 MNTR (B1)		LEAN ←→ RICH

On Board Diagnosis Logic

BBS002X0

The heated oxygen sensor 2 has a much longer switching time between rich and lean than the heated oxygen sensor 1. The oxygen storage capacity before the three way catalyst (manifold) causes the longer switching time. To judge the malfunctions of heated oxygen sensor 2, ECM monitors whether the voltage is unusually high during the various driving condition such as fuel-cut.

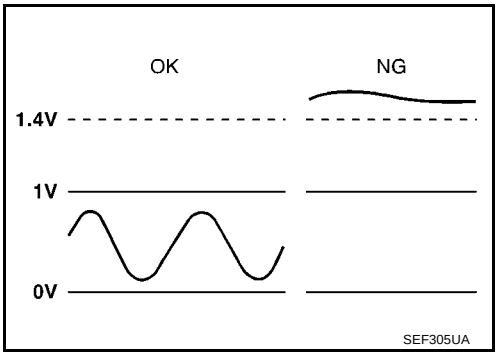

DTC No.	Trouble diagnosis name	DTC detecting condition	Possible cause
P0138 0138	Heated oxygen sensor 2 circuit high voltage	An excessively high voltage from the sensor is sent to ECM.	● Harness or connectors (The sensor circuit is open or shorted.) ● Heated oxygen sensor 2

DTC Confirmation Procedure

BBS002X1

NOTE:
If DTC Confirmation Procedure has been previously conducted, always turn ignition switch OFF and wait at least 10 seconds before conducting the next test.

WITH CONSULT-II

1. Turn ignition switch ON and select “DATA MONITOR” mode with CONSULT-II.
2. Start engine and warm it up to the normal operating temperature.
3. Turn ignition switch OFF and wait at least 10 seconds.
4. Start engine and keep the engine speed between 3,500 and 4,000 rpm for at least 1 minute under no load.
5. Let engine idle for 2 minutes.
6. If 1st trip DTC is detected, go to EC-206, "Diagnostic Procedure".

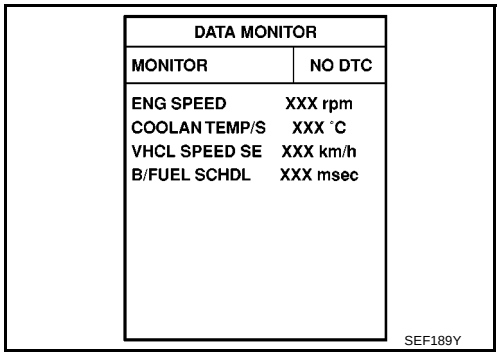

DATA MONITOR	
MONITOR	NO DTC
ENG SPEED	XXX rpm
COOLAN TEMP/S	XXX °C
VHCL SPEED SE	XXX km/h
B/FUEL SCHDL	XXX msec

SEF189Y

WITH GST

Follow the procedure “WITH CONSULT-II” above.

Wiring Diagram

BBS002X2

EC-HO2S2-01

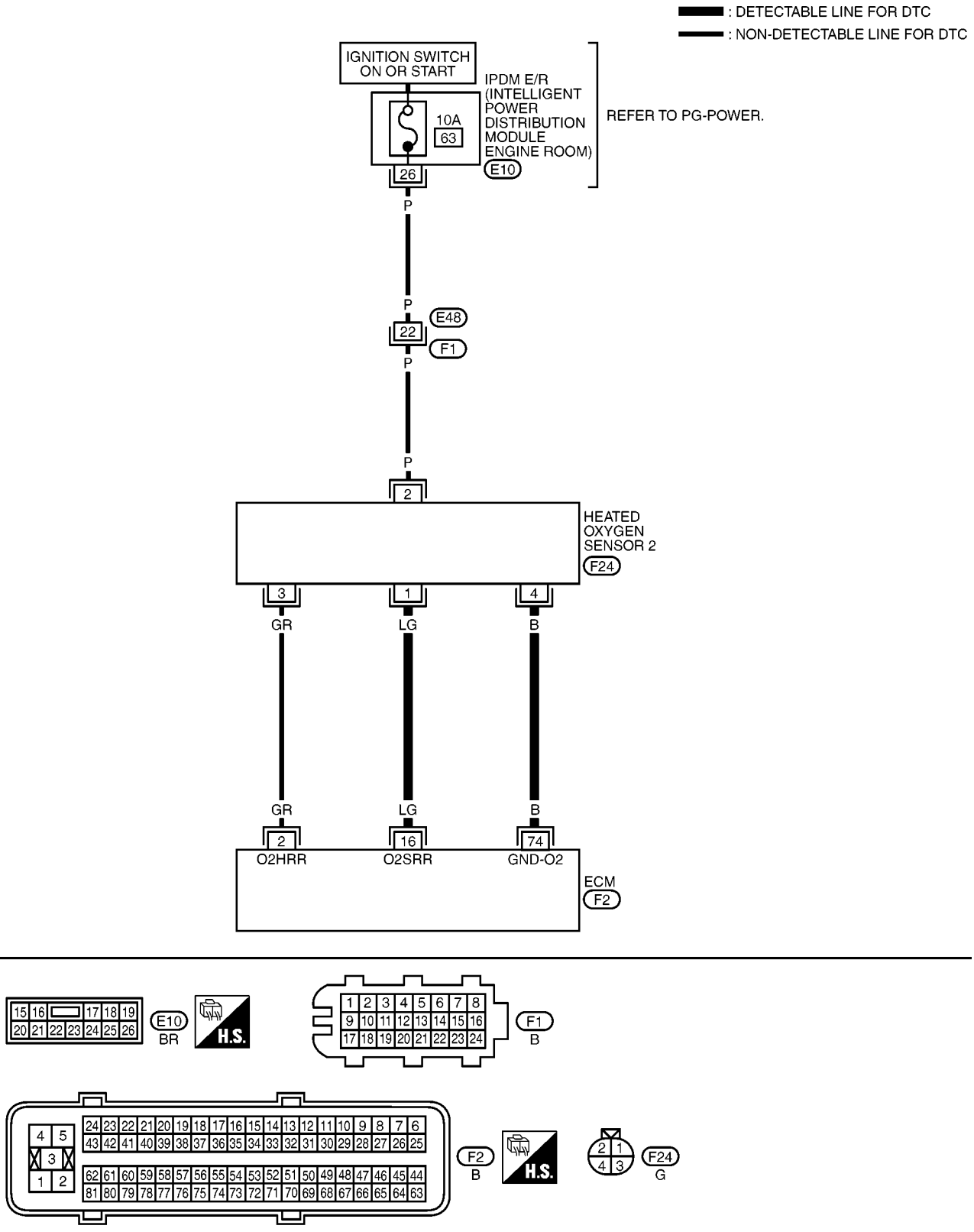

Specification data are reference values and are measured between each terminal and ground.

CAUTION:

Do not use ECM ground terminals when measuring input/output voltage. Doing so may result in damage to the ECM's transistor. Use a ground other than ECM terminals, such as the ground.

TERMINAL NO.	WIRE COLOR	ITEM	CONDITION	DATA (DC Voltage)
2	GR	Heated oxygen sensor 2 heater	**[Engine is running]** ● Engine speed: Below 3,800 rpm after the following conditions are met. – Engine: After warming up – Keeping the engine speed between 3,500 and 4,000 rpm for 1 minute and at idle for 1 minute under no load.	0 - 1.0V
			[Ignition switch ON] ● Engine stopped **[Engine is running]** ● Engine speed: Above 3,800 rpm	BATTERY VOLTAGE (11 - 14V)
16	LG	Heated oxygen sensor 2	**[Engine is running]** ● Revving engine from idle to 3,000rpm quickly after the following conditions are met. – Engine: After warming up – Keeping the engine speed between 3,500 and 4,000 rpm for 1 minute and at idle for 1 minute under no load.	0 - Approximately 1.0V
74	B	Sensor ground (Heated oxygen sensor)	**[Engine is running]** ● **Warm-up condition** ● Idle speed	Approximately 0V

Diagnostic Procedure

BBS002X3

1. CHECK GROUND CONNECTIONS

1. Turn ignition switch OFF.
2. Loosen and retighten ground screws on the body.
   Refer to EC-133, "Ground Inspection" .

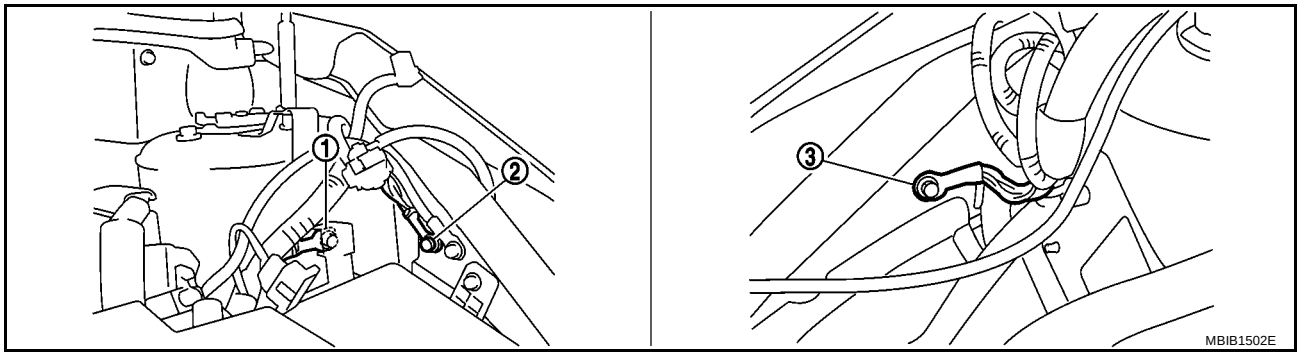

1. Body ground E44
2. Body ground E45
3. Body ground E28

OK or NG

OK >> GO TO 2.
NG >> Repair or replace ground connections.

2. CHECK HO2S2 GROUND CIRCUIT FOR OPEN AND SHORT

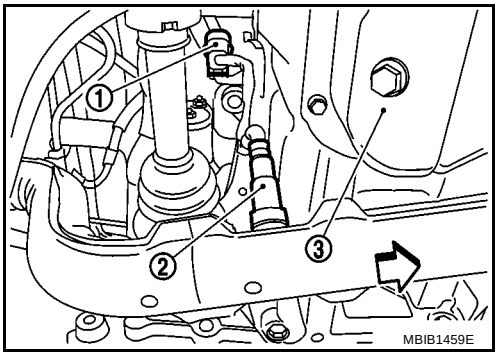

1. Disconnect heated oxygen sensor 2 harness connector (1).
- ⇦: Vehicle front
- Heated oxygen sensor 2 (2)
- Oil pan (3)
2. Disconnect ECM harness connector.
3. Check harness continuity between ECM terminal 74 and HO2S2 terminal 4.
   Refer to Wiring Diagram.

   Continuity should exist.
4. Also check harness for short to ground and short to power.

OK or NG

OK >> GO TO 3.
NG >> Repair open circuit or short to ground or short to power in harness or connectors.

3. CHECK HO2S2 INPUT SIGNAL CIRCUIT FOR OPEN AND SHORT

1. Check harness continuity between ECM terminal 16 and HO2S2 terminal 1.
   Refer to Wiring Diagram.

   Continuity should exist.
2. Check harness continuity between ECM terminal 16 or HO2S2 terminal 1 and ground.
   Refer to Wiring Diagram.

   Continuity should not exist.
3. Also check harness for short to power.

OK or NG

OK >> GO TO 4.
NG >> Repair open circuit or short to ground or short to power in harness or connectors.

4. CHECK HO2S2 CONNECTOR FOR WATER

Check connectors for water.

Water should not exist.

OK or NG

OK >> GO TO 5.
NG >> Repair or replace harness or connectors.

5. CHECK HEATED OXYGEN SENSOR 2

Refer to EC-208, "Component Inspection" .

OK or NG

OK >> GO TO 6.
NG >> Replace heated oxygen sensor 2.

6. CHECK INTERMITTENT INCIDENT

Refer to EC-127, "TROUBLE DIAGNOSIS FOR INTERMITTENT INCIDENT" .

>> **INSPECTION END**

Component Inspection

BBS002X4

HEATED OXYGEN SENSOR 2

With CONSULT-II

1. Turn ignition switch ON and select “DATA MONITOR” mode with CONSULT-II.
2. Start engine and warm it up to the normal operating temperature.
3. Turn ignition switch OFF and wait at least 10 seconds.
4. Start engine and keep the engine speed between 3,500 and 4,000 rpm for at least 1 minute under no load.
5. Let engine idle for 1 minute.

DATA MONITOR	
MONITOR	NO DTC
ENG SPEED	XXX rpm
COOLAN TEMP/S	XXX °C

SEF174Y

6. Select “FUEL INJECTION” in “ACTIVE TEST” mode, and select “HO2S2(B1)” as the monitor item with CONSULT-II.

ACTIVE TEST	
FUEL INJECTION	25 %
MONITOR	
ENG SPEED	XXX rpm
HO2S1 (B1)	XXX V
HO2S2 (B1)	XXX V
HO2S1 MNTR (B1)	RICH
HO2S2 MNTR (B1)	RICH

SEF662Y

7. Check “HO2S2 (B1)” at idle speed when adjusting “FUEL INJECTION” to ±25%.

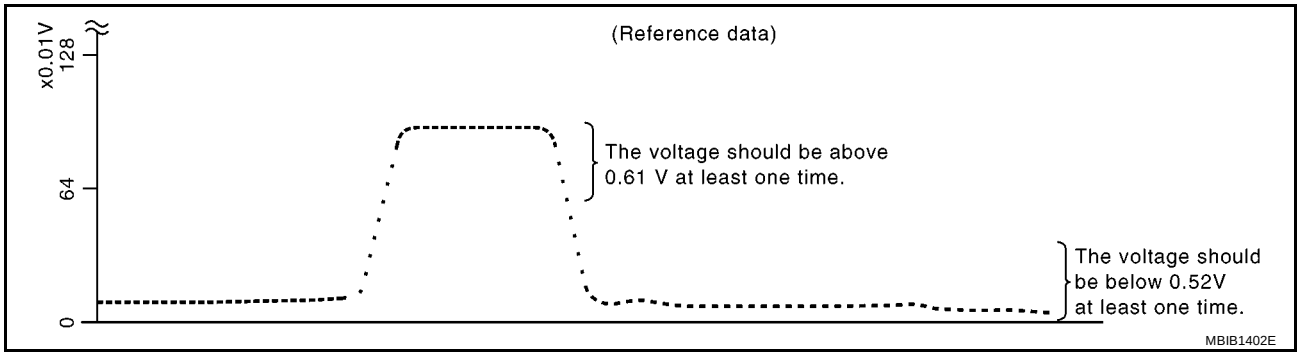

“HO2S2 (B1)” should be above 0.61V at least once when the “FUEL INJECTION” is +25%.
“HO2S2 (B1)” should be below 0.52V at least once when the “FUEL INJECTION” is –25%.

CAUTION:

- **Discard any heated oxygen sensor which has been dropped from a height of more than 0.5 m (19.7 in) onto a hard surface such as a concrete floor; use a new one.**
- **Before installing new oxygen sensor, clean exhaust system threads using Oxygen Sensor Thread Cleaner and approved anti-seize lubricant.**

Without CONSULT-II

1. Start engine and warm it up to the normal operating temperature.
2. Turn ignition switch OFF and wait at least 10 seconds.
3. Start engine and keep the engine speed between 3,500 and 4,000 rpm for at least 1 minute under no load.
4. Let engine idle for 1 minute.
5. Set voltmeter probes between ECM terminal 16 (HO2S2 signal) and ground.

6. Check the voltage when revving up to 4,000 rpm under no load at least 10 times.
   (Depress and release accelerator pedal as soon as possible.)
   The voltage should be above 0.61V at least once during this procedure.
   If the voltage is above 0.61V at step 6, step 7 is not necessary.
7. Keep vehicle idling for 10 minutes, then check voltage. Or check the voltage when coasting from 80 km/h (50 MPH) in 3rd gear position.
   The voltage should be below 0.52V at least once during this procedure.

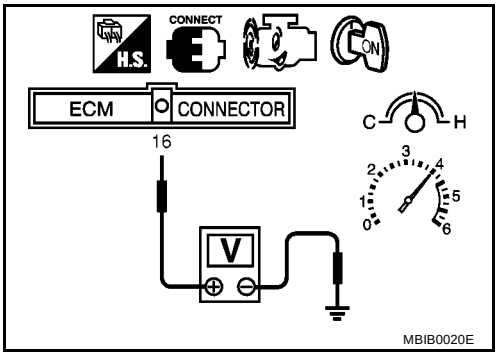

8. If NG, replace heated oxygen sensor 2.

CAUTION:

- **Discard any heated oxygen sensor which has been dropped from a height of more than 0.5 m (19.7 in) onto a hard surface such as a concrete floor; use a new one.**
- **Before installing new oxygen sensor, clean exhaust system threads using Oxygen Sensor Thread Cleaner and approved anti-seize lubricant.**

Removal and Installation

BBS002X5

HEATED OXYGEN SENSOR 2

Refer to EX-3, "EXHAUST SYSTEM" .

DTC P0139 HO2S2

PFP:226A0

Component Description

BBS002X6

The heated oxygen sensor 2, after three way catalyst (manifold), monitors the oxygen level in the exhaust gas.
Even if switching characteristics of the heated oxygen sensor 1 are shifted, the air-fuel ratio is controlled to stoichiometric, by the signal from the heated oxygen sensor 2.
This sensor is made of ceramic zirconia. The zirconia generates voltage from approximately 1V in richer conditions to 0V in leaner conditions.
Under normal conditions the heated oxygen sensor 2 is not used for engine control operation.

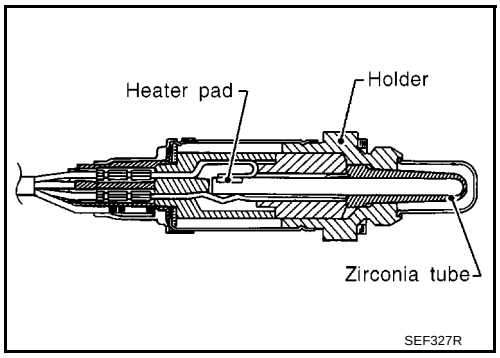

CONSULT-II Reference Value in Data Monitor Mode

BBS002X7

Specification data are reference values.

MONITOR ITEM	CONDITION	SPECIFICATION
HO2S2 (B1)	● Revving engine from idle to 3,000 rpm quickly after the following conditions are met. – Engine: After warming up – Keeping the engine speed between 3,500 and 4,000 rpm for 1 minute and at idle for 1 minute under no load.	0 - 0.3V ←→ Approx. 0.6 - 1.0V
HO2S2 MNTR (B1)		LEAN ←→ RICH

On Board Diagnosis Logic

BBS002X8

The heated oxygen sensor 2 has a much longer switching time between rich and lean than the heated oxygen sensor 1. The oxygen storage capacity before the three way catalyst (manifold) causes the longer switching time. To judge the malfunctions of heated oxygen sensor 2, ECM monitors whether the switching response of the sensor's voltage is faster than specified during the various driving condition such as fuel-cut.

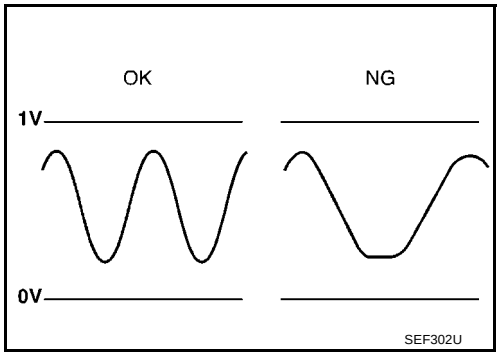

DTC No.	Trouble diagnosis name	DTC detecting condition	Possible cause
P0139 0139	Heated oxygen sensor 2 circuit slow response	It takes more time for the sensor to respond between rich and lean than the specified time.	● Harness or connectors (The sensor circuit is open or shorted.) ● Heated oxygen sensor 2 ● Fuel pressure ● Fuel injector ● Intake air leak

DTC Confirmation Procedure

BBS002X9

CAUTION:
Always drive vehicle at a safe speed.

NOTE:
- **"COMPLETED" will appear on CONSULT-II screen when all tests "COND1", "COND2" and "COND3" are completed.**
- If DTC Confirmation Procedure has been previously conducted, always turn ignition switch OFF and wait at least 10 seconds before conducting the next test.

TESTING CONDITION:
Never stop engine during this procedure. If the engine is stopped, retry this procedure from step 2 in Procedure for COND1.

WITH CONSULT-II

Procedure for COND1

For the best results, perform "DTC WORK SUPPORT" at a temperature of 0 to 30°(32 to 86°F).

1. Start engine and warm it up to normal operating temperature.
2. Turn ignition switch OFF and wait at least 10 seconds.
3. Start engine and keep the engine speed between 3,500 and 4,000 rpm for at least 1 minute under no load.
4. Let engine idle 1 minute.
5. Select "HO2S2 (B1) P0139" of "HO2S2" in "DTC WORK SUPPORT" mode with CONSULT-II.
6. Touch "START".
7. Start engine and let it idle for at least 30 seconds.
8. Rev engine up to 2,000 rpm 2 or 3 times quickly under no load.
   If "COMPLETED" appears on CONSULT-II screen, go to step 2 in "Procedure for COND3".
   If "COMPLETED" does not appear on CONSULT-II screen, go to the following step.
9. When the following conditions are met, "TESTING" will be displayed at "COND1" on the CONSULT-II screen. Maintain the conditions continuously until "TESTING" changes to "COMPLETED". (It will take approximately 60 seconds.)

ENG SPEED	More than 1,500 rpm
B/FUEL SCHDL	More than 1.0 msec
COOLAN TEMP/S	70 - 105 °C (158 - 221°F)
Shift level	Suitable position

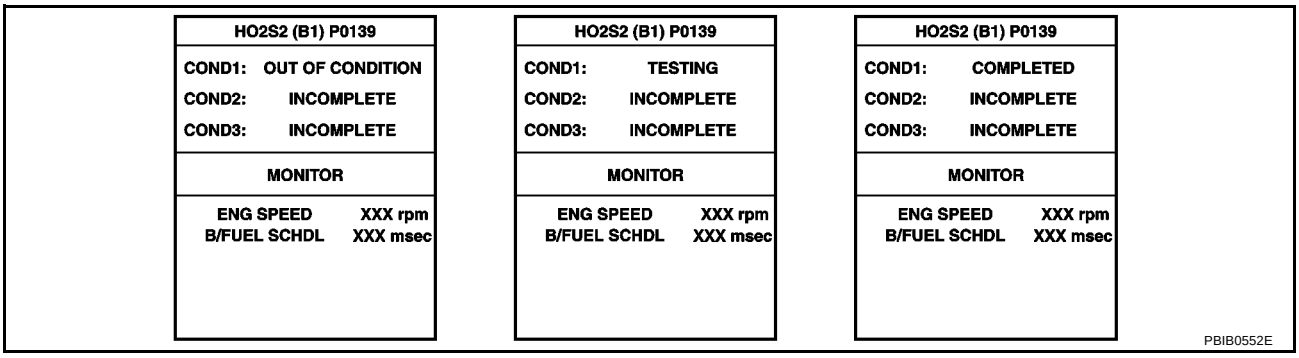

NOTE:
- **If "TESTING" is not displayed after 5 minutes, retry from step 2 in Procedure for COND1.**
- **If "COMPLETED" already appears at "COND2" on CONSULT-II screen before Procedure for COND2 is conducted, it is unnecessary to conduct step 1 in Procedure for COND2.**

Procedure for COND2

1. While driving, release accelerator pedal completely from the above condition [step 9] until “INCOMPLETE” at “COND2” on CONSULT-II screen has turned to “COMPLETED”. (It will take approximately 4 seconds.)

NOTE:
If “COMPLETED” already appears at “COND3” on CONSULT-II screen before Procedure for COND3 is conducted, it is unnecessary to conduct step 1 in Procedure for COND3.

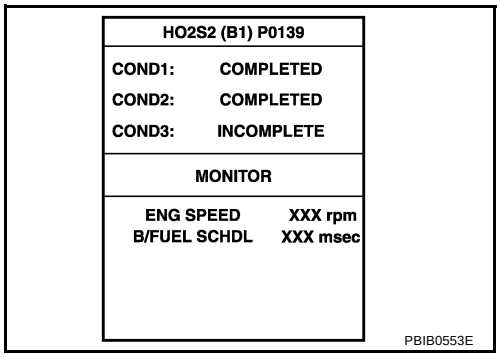

Procedure for COND3

1. Stop vehicle and let it idle until “INCOMPLETE” of “COND3” on CONSULT-II screen has turned to “COMPLETED”. (It will take a maximum of approximately 6 minutes.)
2. Make sure that “OK” is displayed after touching “SELF-DIAG RESULTS”.
   If “NG” is displayed, refer to EC-214, "Diagnostic Procedure" .
   If “CAN NOT BE DIAGNOSED” is displayed, perform the following.

a. Turn ignition switch OFF and leave the vehicle in a cool place (soak the vehicle).
b. Turn ignition switch ON and select “COOLAN TEMP/S” in “DATA MONITOR” mode with CONSULT-II.
c. Start engine and warm it up while monitoring “COOLAN TEMP/S” indication on CONSULT-II.
d. When “COOLAN TEMP/S” indication reaches to 70°(158°F), go to procedure for COND1 step 3.

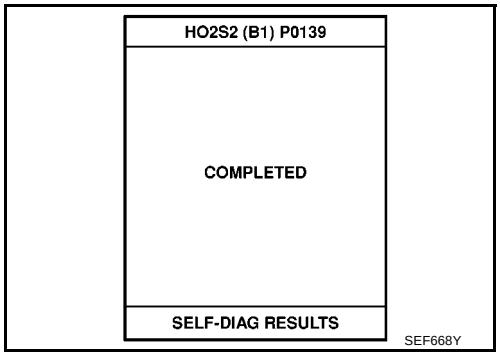

Overall Function Check

BBS002XA

Use this procedure to check the overall function of the heated oxygen sensor 2 circuit. During this check, a 1st trip DTC might not be confirmed.

WITH GST

1. Start engine and warm it up to the normal operating temperature.
2. Turn ignition switch OFF and wait at least 10 seconds.
3. Start engine and keep the engine between 3,500 and 4,000 rpm for at least 1 minute under no load.
4. Let engine idle for 1 minute.
5. Set voltmeter probes between ECM terminal 16 (HO2S2 signal) and ground.
6. Check the voltage when revving up to 4,000 rpm under no load at least 10 times.
   (Depress and release accelerator pedal as soon as possible.)
   A change of voltage should be more than 0.06V for 1 second during this procedure.
   If the voltage can be confirmed in step 6, step 7 is not necessary.
7. Keep vehicle at idling for 10 minutes, then check the voltage. Or check the voltage when coasting from 80 km/h (50 MPH) in 3rd gear position.
   A change of voltage should be more than 0.06V for 1 second during this procedure.
8. If NG, go to EC-214, "Diagnostic Procedure" .

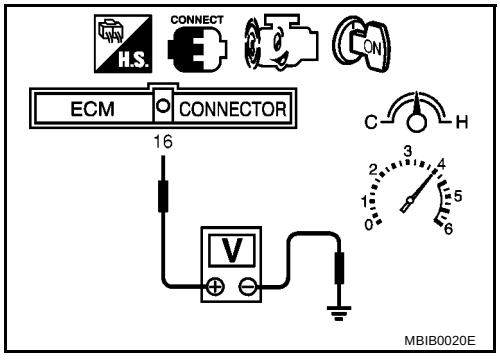

Wiring Diagram

BBS002XB

EC-HO2S2-01

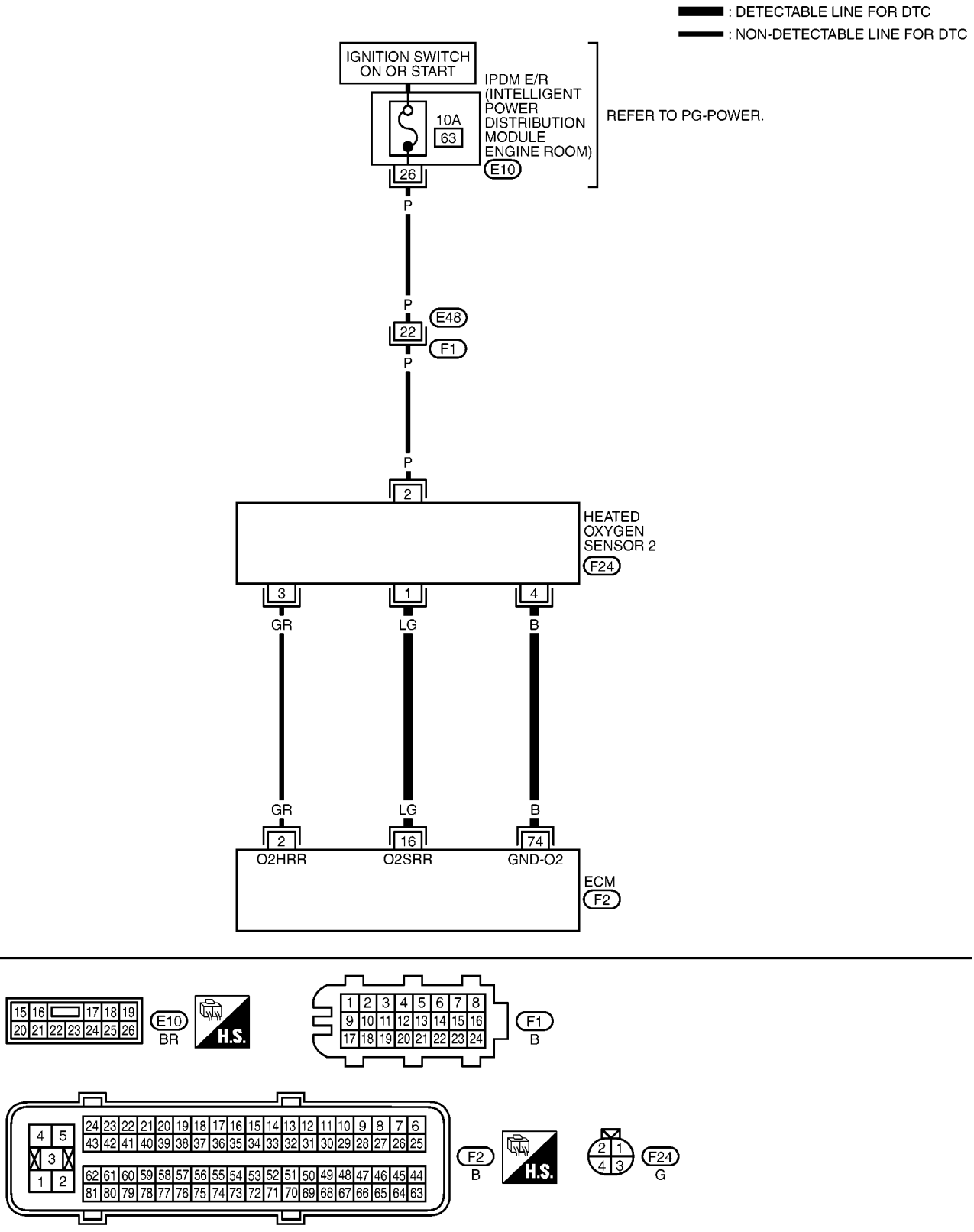

Specification data are reference values and are measured between each terminal and ground.

CAUTION:

Do not use ECM ground terminals when measuring input/output voltage. Doing so may result in damage to the ECM's transistor. Use a ground other than ECM terminals, such as the ground.

TERMINAL NO.	WIRE COLOR	ITEM	CONDITION	DATA (DC Voltage)
2	GR	Heated oxygen sensor 2 heater	**[Engine is running]** ● Engine speed: Below 3,800 rpm after the following conditions are met. – Engine: After warming up – Keeping the engine speed between 3,500 and 4,000 rpm for 1 minute and at idle for 1 minute under no load.	0 - 1.0V
			[Ignition switch ON] ● Engine stopped **[Engine is running]** ● Engine speed: Above 3,800 rpm	BATTERY VOLTAGE (11 - 14V)
16	LG	Heated oxygen sensor 2	**[Engine is running]** ● Revving engine from idle to 3,000rpm quickly after the following conditions are met. – Engine: After warming up – Keeping the engine speed between 3,500 and 4,000 rpm for 1 minute and at idle for 1 minute under no load.	0 - Approximately 1.0V
74	B	Sensor ground (Heated oxygen sensor)	**[Engine is running]** ● **Warm-up condition** ● Idle speed	Approximately 0V

Diagnostic Procedure

BBS002XC

1. CHECK GROUND CONNECTIONS

1. Turn ignition switch OFF.
2. Loosen and retighten ground screws on the body.
   Refer to EC-133, "Ground Inspection" .

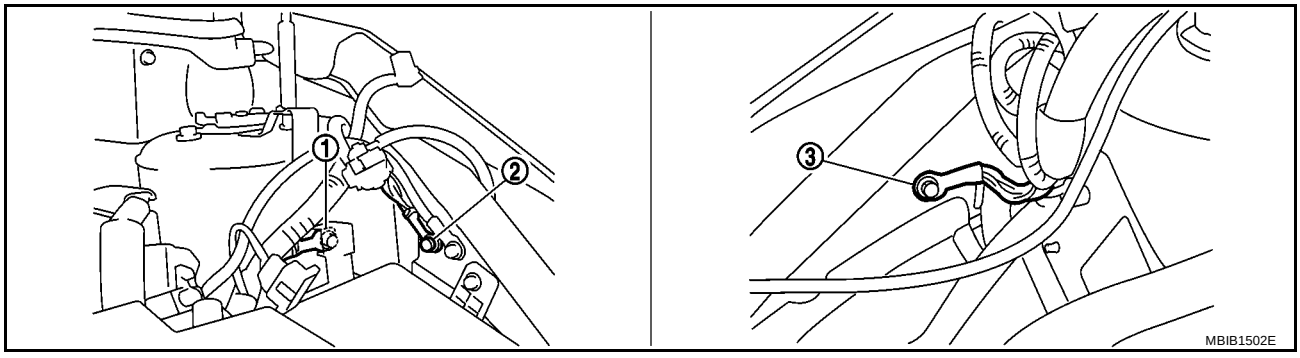

1. Body ground E44
2. Body ground E45
3. Body ground E28

OK or NG

OK >> GO TO 2.
NG >> Repair or replace ground connections.

2. CLEAR THE SELF-LEARNING DATA

With CONSULT-II

1. Start engine and warm it up to normal operating temperature.
2. Select “SELF-LEARNING CONT” in “WORK SUPPORT” mode with CONSULT-II.
3. Clear the self-learning control coefficient by touching “CLEAR”.
4. Run engine for at least 10 minutes at idle speed.
   Is the 1st trip DTC P0171 or P0172 detected?
   Is it difficult to start engine?

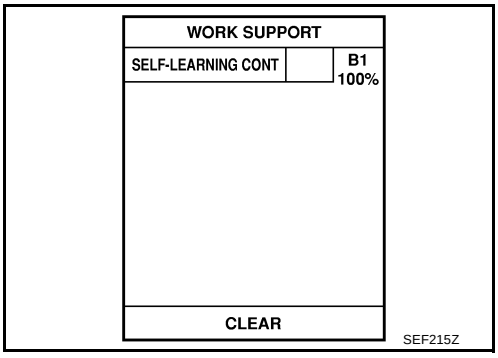

Without CONSULT-II

1. Start engine and warm it up to normal operating temperature.
2. Turn ignition switch OFF.
3. Disconnect manifold absolute pressure sensor harness connector, and restart and run engine for at least 5 seconds at idle speed.
4. Stop engine and reconnect manifold absolute pressure sensor harness connector.
5. Make sure that DTC P0107 is displayed.
6. Erase the DTC memory. Refer to EC-57, "HOW TO ERASE EMISSION-RELATED DIAGNOSTIC INFORMATION" .
7. Make sure that DTC P0000 is displayed.
8. Run engine for at least 10 minutes at idle speed.
   Is the 1st trip DTC P0171 or P0172 detected?
   Is it difficult to start engine?

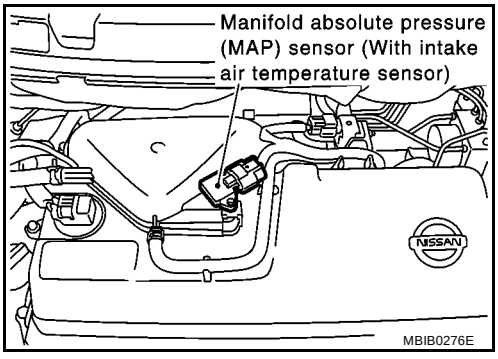

Yes or No

Yes >> Perform trouble diagnosis for DTC P0171 or P0172. Refer to EC-218 or EC-226 .
No >> GO TO 3.

3. CHECK HO2S2 GROUND CIRCUIT FOR OPEN AND SHORT

1. Turn ignition switch OFF.
2. Disconnect heated oxygen sensor 2 harness connector (1).
   - ⇦: Vehicle front
   - Heated oxygen sensor 2 (2)
   - Oil pan (3)
3. Disconnect ECM harness connector.
4. Check harness continuity between ECM terminal 74 and HO2S2 terminal 4.
   Refer to Wiring Diagram.

   Continuity should exist.

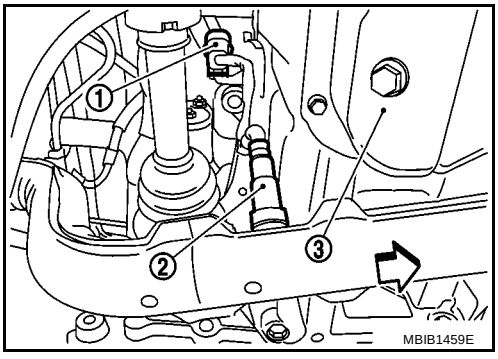

5. Also check harness for short to ground and short to power.

OK or NG

OK >> GO TO 4.
NG >> Repair open circuit or short to ground or short to power in harness or connectors.

4. CHECK HO2S2 INPUT SIGNAL CIRCUIT FOR OPEN AND SHORT

1. Check harness continuity between ECM terminal 16 and HO2S2 terminal 1.
   Refer to Wiring Diagram.

   Continuity should exist.

2. Check harness continuity between ECM terminal 16 or HO2S2 terminal 1 and ground.
   Refer to Wiring Diagram.

   Continuity should not exist.

3. Also check harness for short to power.

OK or NG

OK >> GO TO 5.
NG >> Repair open circuit or short to ground or short to power in harness or connectors.

5. CHECK HEATED OXYGEN SENSOR 2

Refer to EC-216, "Component Inspection" .

OK or NG

OK >> GO TO 6.
NG >> Replace heated oxygen sensor 2.

6. CHECK INTERMITTENT INCIDENT

Refer to EC-127, "TROUBLE DIAGNOSIS FOR INTERMITTENT INCIDENT" .

>> **INSPECTION END**

Component Inspection

BBS002XD

HEATED OXYGEN SENSOR 2

With CONSULT-II

1. Turn ignition switch ON and select “DATA MONITOR” mode with CONSULT-II.
2. Start engine and warm it up to the normal operating temperature.
3. Turn ignition switch OFF and wait at least 10 seconds.
4. Start engine and keep the engine speed between 3,500 and 4,000 rpm for at least 1 minute under no load.
5. Let engine idle for 1 minute.

DATA MONITOR	
MONITOR	NO DTC
ENG SPEED	XXX rpm
COOLAN TEMP/S	XXX °C

SEF174Y

6. Select “FUEL INJECTION” in “ACTIVE TEST” mode, and select “HO2S2 (B1)” as the monitor item with CONSULT-II.

ACTIVE TEST	
FUEL INJECTION	25 %
MONITOR	
ENG SPEED	XXX rpm
HO2S1 (B1)	XXX V
HO2S2 (B1)	XXX V
HO2S1 MNTR (B1)	RICH
HO2S2 MNTR (B1)	RICH

SEF662Y

7. Check “HO2S2 (B1)” at idle speed when adjusting “FUEL INJECTION” to ±25%.

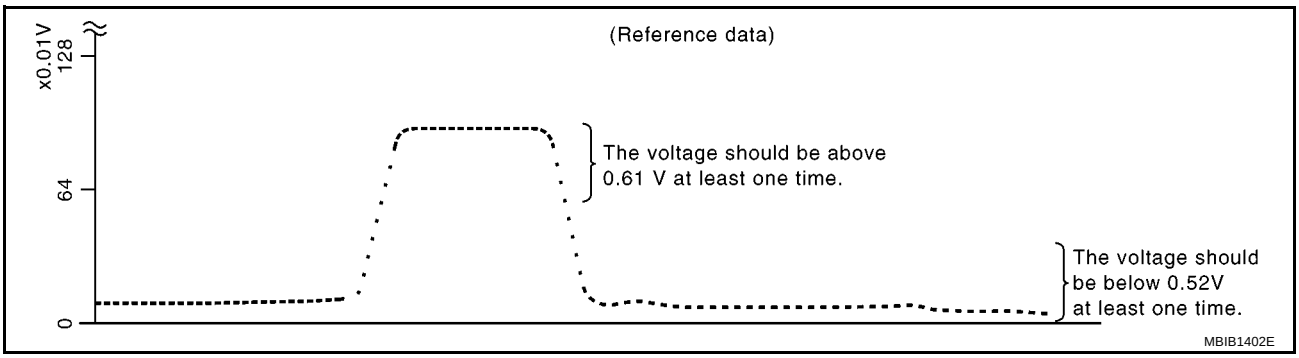

“HO2S2 (B1)” should be above 0.61V at least once when the “FUEL INJECTION” is +25%.
“HO2S2 (B1)” should be below 0.52V at least once when the “FUEL INJECTION” is –25%.

CAUTION:

- **Discard any heated oxygen sensor which has been dropped from a height of more than 0.5 m (19.7 in) onto a hard surface such as a concrete floor; use a new one.**
- **Before installing new oxygen sensor, clean exhaust system threads using Oxygen Sensor Thread Cleaner and approved anti-seize lubricant.**

Without CONSULT-II

1. Start engine and warm it up to the normal operating temperature.
2. Turn ignition switch OFF and wait at least 10 seconds.
3. Start engine and keep the engine speed between 3,500 and 4,000 rpm for at least 1 minute under no load.
4. Let engine idle for 1 minute.
5. Set voltmeter probes between ECM terminal 16 (HO2S2 signal) and ground.
6. Check the voltage when revving up to 4,000 rpm under no load at least 10 times.
   (Depress and release accelerator pedal as soon as possible.)
   The voltage should be above 0.61V at least once during this procedure.
   If the voltage is above 0.61V at step 6, step 7 is not necessary.

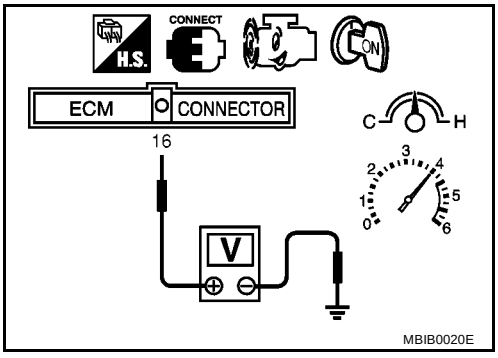

7. Keep vehicle idling for 10 minutes, then check voltage. Or check the voltage when coasting from 80 km/h (50 MPH) in 3rd gear position.
   The voltage should be below 0.52V at least once during this procedure.
8. If NG, replace heated oxygen sensor 2.

CAUTION:

- **Discard any heated oxygen sensor which has been dropped from a height of more than 0.5 m (19.7 in) onto a hard surface such as a concrete floor; use a new one.**
- **Before installing new oxygen sensor, clean exhaust system threads using Oxygen Sensor Thread Cleaner and approved anti-seize lubricant.**

Removal and Installation

BBS002XE

HEATED OXYGEN SENSOR 2

Refer to EX-3, "EXHAUST SYSTEM" .

DTC P0171 FUEL INJECTION SYSTEM FUNCTION

PFP:16600

On Board Diagnosis Logic

BBS002XF

With the Air/Fuel Mixture Ratio Self-Learning Control, the actual mixture ratio can be brought closely to the theoretical mixture ratio based on the mixture ratio feedback signal from the heated oxygen sensor 1. The ECM calculates the necessary compensation to correct the offset between the actual and the theoretical ratios.
In case the amount of the compensation value is extremely large (The actual mixture ratio is too lean.), the ECM judges the condition as the fuel injection system malfunction and lights up the MI (2 trip detection logic).

Sensor	Input Signal to ECM	ECM function	Actuator
Heated oxygen sensors 1	Density of oxygen in exhaust gas (Mixture ratio feedback signal)	Fuel injection control	Fuel injector

DTC No.	Trouble diagnosis name	DTC detecting condition	Possible cause
P0171 0171	Fuel injection system too lean	● Fuel injection system does not operate properly. ● The amount of mixture ratio compensation is too large. (The mixture ratio is too lean.)	● Intake air leaks ● Heated oxygen sensor 1 ● Fuel injector ● Exhaust gas leak ● Incorrect fuel pressure ● Lack of fuel ● Manifold absolute pressure sensor ● Incorrect PCV hose connection

DTC Confirmation Procedure

BBS002XG

NOTE:
If DTC Confirmation Procedure has been previously conducted, always turn ignition switch OFF and wait at least 10 seconds before conducting the next test.

WITH CONSULT-II

1. Start engine and warm it up to normal operating temperature.
2. Turn ignition switch OFF and wait at least 10 seconds.
3. Turn ignition switch ON and select “SELF-LEARNING CONT” in “WORK SUPPORT” mode with CONSULT-II.
4. Clear the self-learning control coefficient by touching “CLEAR”.
5. Select “DATA MONITOR” mode with CONSULT-II.
6. Start engine again and let it idle for at least 10 minutes.
   The 1st trip DTC P0171 should be detected at this stage, if a malfunction exists. If so, go to EC-222, "Diagnostic Procedure" .

   NOTE:
   If 1st trip DTC is not detected during above procedure, performing the following procedure is advised.

a. Turn ignition switch OFF and wait at least 10 seconds.
b. Start engine and drive the vehicle under the similar conditions to (1st trip) Freeze Frame Data for 10 minutes. Refer to the table below.
   Hold the accelerator pedal as steady as possible.

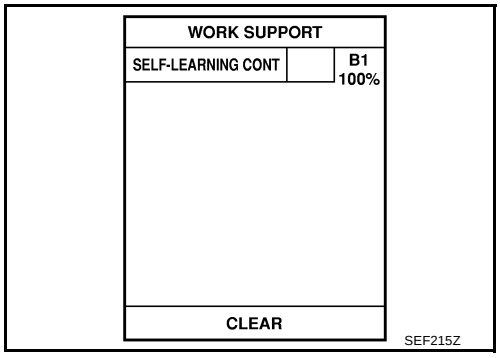

The similar conditions to (1st trip) Freeze Frame Data means the vehicle operation that the following conditions should be satisfied at the same time.

Engine speed	Engine speed in the freeze frame data ± 400 rpm
Vehicle speed	Vehicle speed in the freeze frame data ± 10 km/h (6 MPH)

Engine coolant temperature (T) condition	When the freeze frame data shows lower than 70 °C (158 °F), T should be lower than 70 °C (158 °F).
	When the freeze frame data shows higher than or equal to 70 °C (158 °F), T should be higher than or equal to 70 °C (158 °F).

7. If it is difficult to start engine at step 6, the fuel injection system has a malfunction, too.
8. Crank engine while depressing accelerator pedal. If engine starts, go to EC-222, "Diagnostic Procedure" . If engine does not start, check exhaust and intake air leak visually.

WITH GST

1. Start engine and warm it up to normal operating temperature.
2. Turn ignition switch OFF and wait at least 10 seconds.
3. Disconnect manifold absolute pressure sensor harness connector.
4. Restart engine and let it idle for at least 5 seconds.
5. Stop engine and reconnect manifold absolute pressure sensor harness connector.
6. Select Service $03 with GST. Make sure DTC P0107 is detected.
7. Select Service $04 with GST and erase the DTC P0107.
8. Start engine again and let it idle for at least 10 minutes.
9. Select Service $07 with GST. The 1st trip DTC P0171 should be detected at this stage, if a malfunction exists. If so, go to EC-222, "Diagnostic Procedure" .

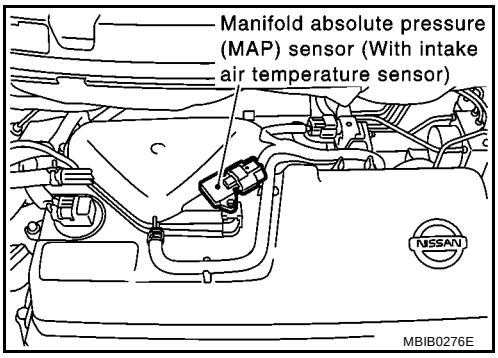

NOTE:
If 1st trip DTC is not detected during above procedure, performing the following procedure is advised.

a. Turn ignition switch OFF and wait at least 10 seconds.
b. Start engine and drive the vehicle under the similar conditions to (1st trip) Freeze Frame Data for 10 minutes. Refer to the table below.
Hold the accelerator pedal as steady as possible.

The similar conditions to (1st trip) Freeze Frame Data means the vehicle operation that the following conditions should be satisfied at the same time.

Engine speed	Engine speed in the freeze frame data ± 400 rpm
Vehicle speed	Vehicle speed in the freeze frame data ± 10 km/h (6 MPH)
Engine coolant temperature (T) condition	When the freeze frame data shows lower than 70 °C (158 °F), T should be lower than 70 °C (158 °F).
	When the freeze frame data shows higher than or equal to 70 °C (158 °F), T should be higher than or equal to 70 °C (158 °F).

10. If it is difficult to start engine at step 8, the fuel injection system has a malfunction.
11. Crank engine while depressing accelerator pedal. If engine starts, go to EC-222, "Diagnostic Procedure" . If engine does not start, check exhaust and intake air leak visually.

Wiring Diagram

BBS002XH

EC-FUEL-01

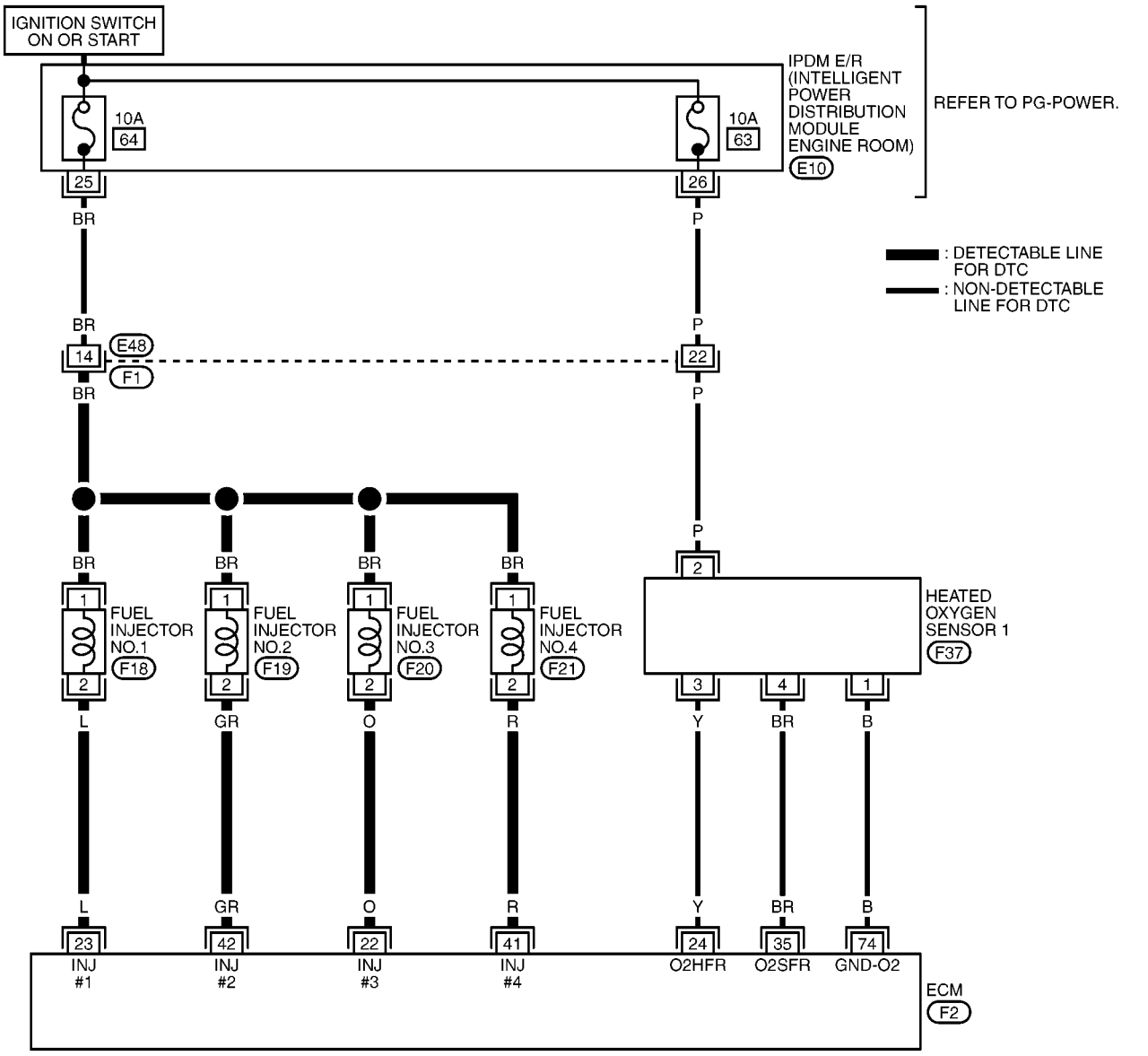

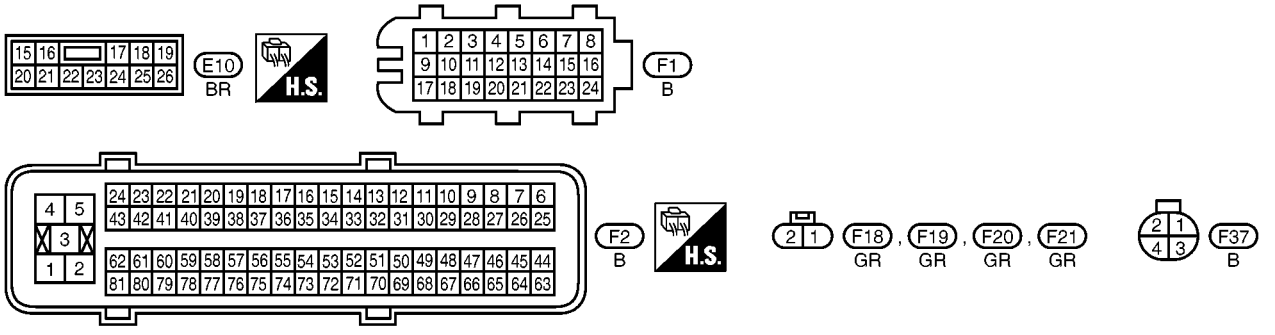

MBWA1512E

Specification data are reference values and are measured between each terminal and ground.
Pulse signal is measured by CONSULT-II.

CAUTION:
Do not use ECM ground terminals when measuring input/output voltage. Doing so may result in damage to the ECM's transistor. Use a ground other than ECM terminals, such as the ground.

TERMINAL NO.	WIRE COLOR	ITEM	CONDITION	DATA (DC Voltage)
22 23 41 42	O L R GR	Fuel injector No. 3 Fuel injector No. 1 Fuel injector No. 4 Fuel injector No. 2	**[Engine is running]** ● **Warm-up condition** ● Idle speed **NOTE:** The pulse cycle changes depending on rpm at idle.	BATTERY VOLTAGE (11 - 14V)★ 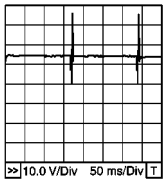 PBIB0529E
			[Engine is running] ● **Warm-up condition** ● Engine speed: 2,000 rpm	BATTERY VOLTAGE (11 - 14V)★ 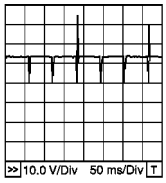 PBIB0530E
24	Y	Heated oxygen sensor 1 heater	**[Engine is running]** ● **Warm-up condition** ● Engine speed: Below 3,600 rpm	Approximately 7.0V★ 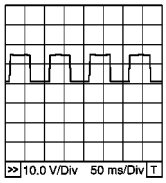 PBIB0519E
			[Engine is running] ● Engine speed: Above 3,600 rpm	BATTERY VOLTAGE (11 - 14V)
35	BR	Heated oxygen sensor 1	**[Engine is running]** ● **Warm-up condition** ● Engine speed: 2,000 rpm	0 - Approximately 1.0V (Periodically change)
74	B	Sensor ground (Heated oxygen sensor)	**[Engine is running]** ● **Warm-up condition** ● Idle speed	Approximately 0V

★: Average voltage for pulse signal (Actual pulse signal can be confirmed by oscilloscope.)

Diagnostic Procedure

BBS002XI

1. CHECK EXHAUST GAS LEAK

1. Start engine and run it at idle.
2. Listen for an exhaust gas leak before three way catalyst (manifold).

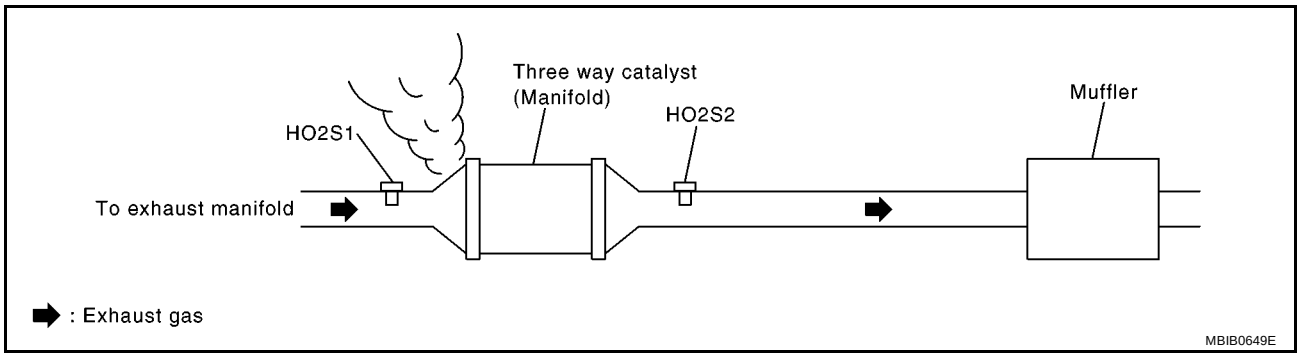

OK or NG

OK >> GO TO 2.
NG >> Repair or replace.

2. CHECK FOR INTAKE AIR LEAK AND PCV HOSE

1. Listen for an intake air leak after the manifold absolute pressure sensor.
2. Check PCV hose connection.

OK or NG

OK >> GO TO 3.
NG >> Repair or replace.

3. CHECK HEATED OXYGEN SENSOR 1 CIRCUIT FOR OPEN AND SHORT

1. Turn ignition switch OFF.
2. Disconnect heated oxygen sensor 1 (HO2S1) harness connector (1).
3. Disconnect ECM harness connector.
4. Check harness continuity between ECM terminal 35 and HO2S1 terminal 4.
   Refer to Wiring Diagram.

   Continuity should exist.

5. Check harness continuity between ECM terminal 35 or HO2S1 terminal 4 and ground.
   Refer to Wiring Diagram.

   Continuity should not exist.

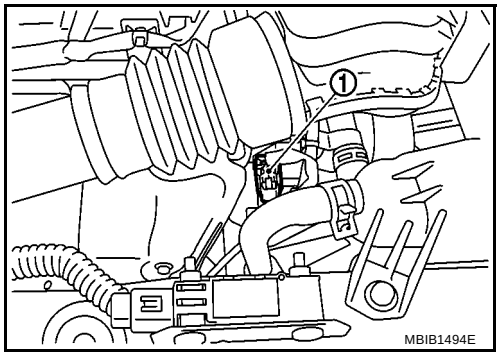

6. Also check harness for short to power.

OK or NG

OK >> GO TO 4.
NG >> Repair open circuit or short to ground or short to power in harness or connectors.

4. CHECK FUEL PRESSURE

1. Release fuel pressure to zero. Refer to EC-71, "FUEL PRESSURE RELEASE" .
2. Install fuel pressure gauge and check fuel pressure. Refer to EC-72, "FUEL PRESSURE CHECK" .

At idling: Approximately 350 kPa (3.5 bar, 3.57 kg/cm^2 , 51 psi)

OK or NG

OK >> GO TO 6.
NG >> GO TO 5.

5. DETECT MALFUNCTIONING PART

Check the following.

- Fuel pump and circuit (Refer to EC-427, "FUEL PUMP" .)
- Fuel pressure regulator (Refer to EC-71, "Fuel Pressure Check" .)
- Fuel lines (Refer to EM-32, "FUEL INJECTOR AND FUEL TUBE" .)
- Fuel filter for clogging

>> Repair or replace.

6. CHECK MANIFOLD ABSOLUTE PRESSUR SENSOR

With CONSULT-II

1. Install all removed parts.
2. Check manifold absolute pressure sensor signal with CONSULT-II.

Approximately 1.5V: at idling
Approximately 1.2V: at 2,500 rpm

With GST

1. Install all removed parts.
2. Check manifold absolute pressure sensor signal in Service $01 with GST.

Approximately 1.5V: at idling
Approximately 1.2V: at 2,500 rpm

OK or NG

OK >> GO TO 7.
NG >> Check connectors for rusted terminals or loose connections in the manifold absolute pressure sensor circuit or ground. Refer to EC-155, "DTC P0107, P0108 MANIFOLD ABSOLUTE PRESSURE SENSOR" .

7. CHECK FUNCTION OF FUEL INJECTORS

With CONSULT-II

1. Start engine.
2. Perform “POWER BALANCE” in “ACTIVE TEST” mode with CONSULT-II.
3. Make sure that each fuel circuit produces a momentary engine speed drop.

ACTIVE TEST	
POWER BALANCE	
MONITOR	
ENG SPEED	XXX rpm

MBIB0302E

Without CONSULT-II

1. Start engine.
2. Listen to each fuel injector operating sound.

Clicking noise should be heard.

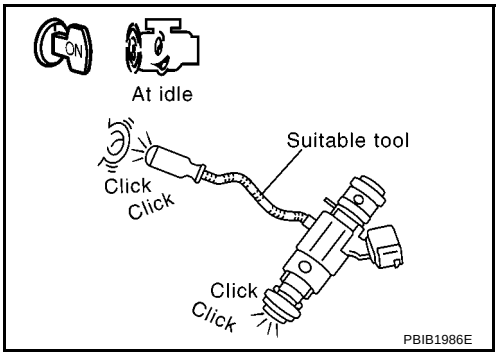

PBIB1986E

OK or NG

OK >> GO TO 8.
NG >> Perform trouble diagnosis for FUEL INJECTOR, EC-421, "FUEL INJECTOR" .

8. CHECK FUEL INJECTOR

1. Confirm that the engine is cooled down and there are no fire hazards near the vehicle.
2. Turn ignition switch OFF.
3. Remove fuel tube assembly. Refer to EM-32, "FUEL INJECTOR AND FUEL TUBE" .
   Keep fuel hose and all fuel injectors connected to fuel tube.
   The fuel injector harness connectors should remain connected.
4. Disconnect all ignition coil harness connectors.
5. Prepare pans or saucers under each fuel injector.
6. Crank engine for about 3 seconds. Make sure that fuel sprays out from fuel injectors.

Fuel should be sprayed evenly for each fuel injector.

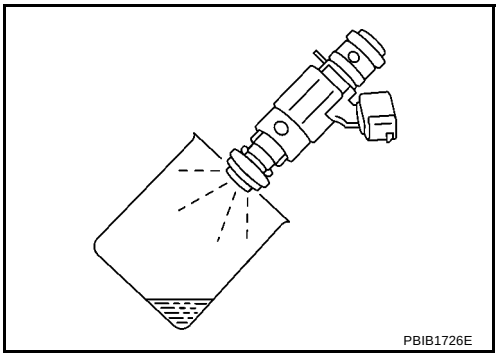
PBIB1726E

OK or NG

OK >> GO TO 9.
NG >> Replace fuel injectors from which fuel does not spray out. Always replace O-ring with new ones.

9. CHECK INTERMITTENT INCIDENT

Refer to EC-127, "TROUBLE DIAGNOSIS FOR INTERMITTENT INCIDENT" .

>> **INSPECTION END**

DTC P0172 FUEL INJECTION SYSTEM FUNCTION

PFP:16600

On Board Diagnosis Logic

BBS002XJ

With the Air/Fuel Mixture Ratio Self-Learning Control, the actual mixture ratio can be brought closely to the theoretical mixture ratio based on the mixture ratio feedback signal from the heated oxygen sensors 1. The ECM calculates the necessary compensation to correct the offset between the actual and the theoretical ratios.
In case the amount of the compensation value is extremely large (The actual mixture ratio is too rich.), the ECM judges the condition as the fuel injection system malfunction and lights up the MI (2 trip detection logic).

Sensor	Input Signal to ECM	ECM function	Actuator
Heated oxygen sensors 1	Density of oxygen in exhaust gas (Mixture ratio feedback signal)	Fuel injection control	Fuel injector

DTC No.	Trouble diagnosis name	DTC detecting condition	Possible cause
P0172 0172	Fuel injection system too rich	● Fuel injection system does not operate properly. ● The amount of mixture ratio compensation is too large. (The mixture ratio is too rich.)	● Heated oxygen sensor 1 ● Fuel injector ● Exhaust gas leak ● Incorrect fuel pressure ● Manifold absolute pressure sensor

DTC Confirmation Procedure

BBS002XK

NOTE:
If DTC Confirmation Procedure has been previously conducted, always turn ignition switch OFF and wait at least 10 seconds before conducting the next test.

WITH CONSULT-II

1. Start engine and warm it up to normal operating temperature.
2. Turn ignition switch OFF and wait at least 10 seconds.
3. Turn ignition switch ON and select “SELF-LEARNING CONT” in “WORK SUPPORT” mode with CONSULT-II.
4. Clear the self-learning control coefficient by touching “CLEAR”.
5. Select “DATA MONITOR” mode with CONSULT-II.
6. Start engine again and let it idle for at least 10 minutes.
   The 1st trip DTC P0172 should be detected at this stage, if a malfunction exists. If so, go to EC-230, "Diagnostic Procedure" .

   NOTE:
   If 1st trip DTC is not detected during above procedure, performing the following procedure is advised.

a. Turn ignition switch OFF and wait at least 10 seconds.
b. Start engine and drive the vehicle under the similar conditions to (1st trip) Freeze Frame Data for a certain time. Refer to the table below.
   Hold the accelerator pedal as steady as possible.

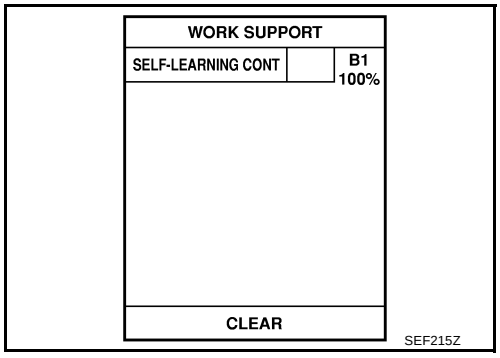

The similar conditions to (1st trip) Freeze Frame Data means the vehicle operation that the following conditions should be satisfied at the same time.

Engine speed	Engine speed in the freeze frame data ± 400 rpm
Vehicle speed	Vehicle speed in the freeze frame data ± 10 km/h (6 MPH)
Engine coolant temperature (T) condition	When the freeze frame data shows lower than 70 °C (158 °F), T should be lower than 70 °C (158 °F).
	When the freeze frame data shows higher than or equal to 70 °C (158 °F), T should be higher than or equal to 70 °C (158 °F).

7. If it is difficult to start engine at step 6, the fuel injection system has a malfunction, too.
8. Crank engine while depressing accelerator pedal.

If engine starts, go to EC-230, "Diagnostic Procedure" . If engine does not start, remove spark plugs and check for fouling, etc.

WITH GST

1. Start engine and warm it up to normal operating temperature.
2. Turn ignition switch OFF and wait at least 10 seconds.
3. Disconnect manifold absolute pressure sensor harness connector. Then restart and run engine for at least 5 seconds at idle speed.
4. Stop engine and reconnect manifold absolute pressure sensor harness connector.
5. Select Service $03 with GST. Make sure DTC P0107 is detected.
6. Select Service $04 with GST and erase the DTC P0107.
7. Start engine again and let it idle for at least 10 minutes.
8. Select Service $07 with GST. The 1st trip DTC P0172 should be detected at this stage, if a malfunction exists. If so, go to EC-230, "Diagnostic Procedure" .

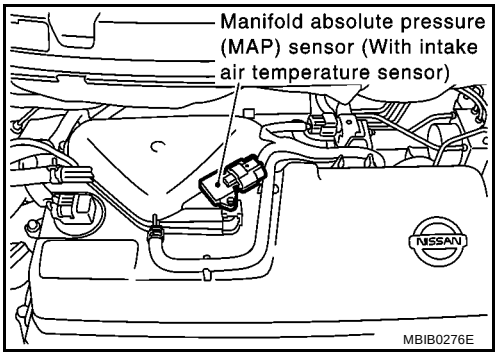

NOTE:
If 1st trip DTC is not detected during above procedure, performing the following procedure is advised.

a. Turn ignition switch OFF and wait at least 10 seconds.
b. Start engine and drive the vehicle under the similar conditions to (1st trip) Freeze Frame Data for a certain time. Refer to the table below.
Hold the accelerator pedal as steady as possible.

The similar conditions to (1st trip) Freeze Frame Data means the vehicle operation that the following conditions should be satisfied at the same time.

Engine speed	Engine speed in the freeze frame data ± 400 rpm
Vehicle speed	Vehicle speed in the freeze frame data ± 10 km/h (6 MPH)
Engine coolant temperature (T) condition	When the freeze frame data shows lower than 70 °C (158 °F), T should be lower than 70 °C (158 °F).
	When the freeze frame data shows higher than or equal to 70 °C (158 °F), T should be higher than or equal to 70 °C (158 °F).

9. If it is difficult to start engine at step 7, the fuel injection system has a malfunction.
10. Crank engine while depressing accelerator pedal.
If engine starts, go to EC-230, "Diagnostic Procedure" . If engine does not start, remove ignition plugs and check for fouling, etc.

Wiring Diagram

BBS002XL

EC-FUEL-01

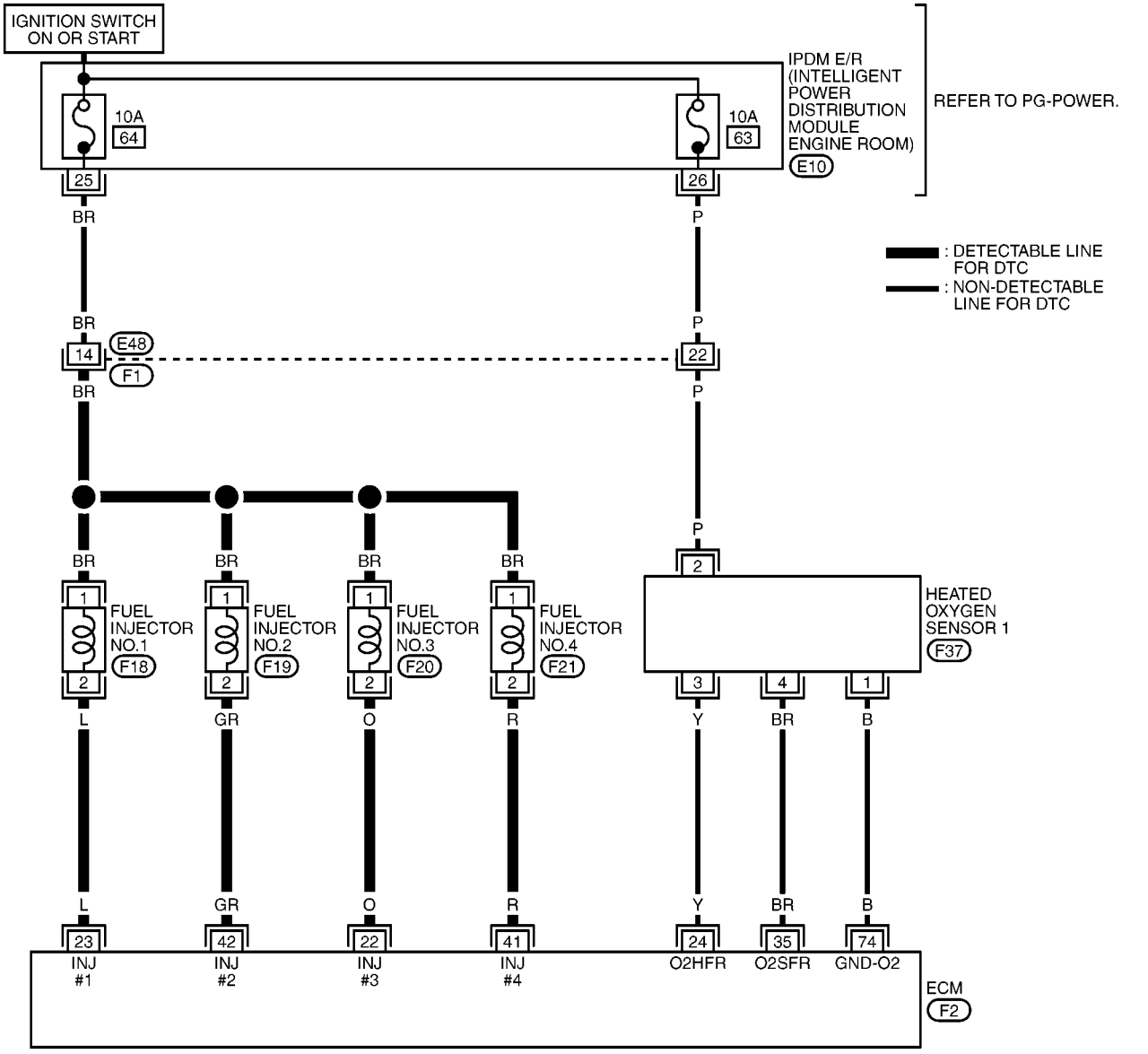

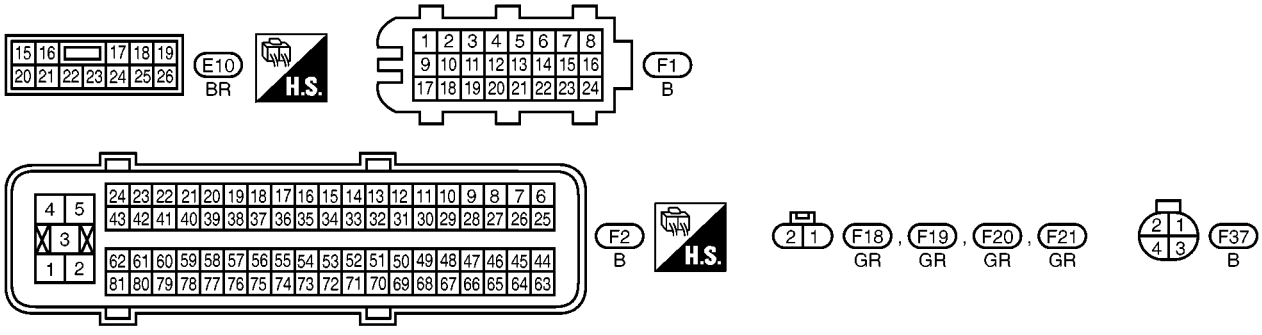

MBWA1512E

Specification data are reference values and are measured between each terminal and ground.
Pulse signal is measured by CONSULT-II.

CAUTION:
Do not use ECM ground terminals when measuring input/output voltage. Doing so may result in damage to the ECM's transistor. Use a ground other than ECM terminals, such as the ground.

TERMINAL NO.	WIRE COLOR	ITEM	CONDITION	DATA (DC Voltage)
22 23 41 42	O L R GR	Fuel injector No. 3 Fuel injector No. 1 Fuel injector No. 4 Fuel injector No. 2	**[Engine is running]** ● **Warm-up condition** ● Idle speed **NOTE:** The pulse cycle changes depending on rpm at idle.	BATTERY VOLTAGE (11 - 14V)★ 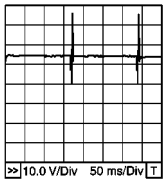 PBIB0529E
			[Engine is running] ● **Warm-up condition** ● Engine speed: 2,000 rpm	BATTERY VOLTAGE (11 - 14V)★ 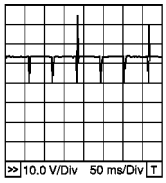 PBIB0530E
24	Y	Heated oxygen sensor 1 heater	**[Engine is running]** ● **Warm-up condition** ● Engine speed: Below 3,600 rpm	Approximately 7.0V★ 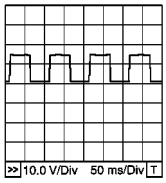 PBIB0519E
			[Engine is running] ● Engine speed: Above 3,600 rpm	BATTERY VOLTAGE (11 - 14V)
35	BR	Heated oxygen sensor 1	**[Engine is running]** ● **Warm-up condition** ● Engine speed: 2,000 rpm	0 - Approximately 1.0V (Periodically change)
74	B	Sensor ground (Heated oxygen sensor)	**[Engine is running]** ● **Warm-up condition** ● Idle speed	Approximately 0V

★: Average voltage for pulse signal (Actual pulse signal can be confirmed by oscilloscope.)

Diagnostic Procedure

BBS002XM

1. CHECK EXHAUST GAS LEAK

1. Start engine and run it at idle.
2. Listen for an exhaust gas leak before three way catalyst (manifold).

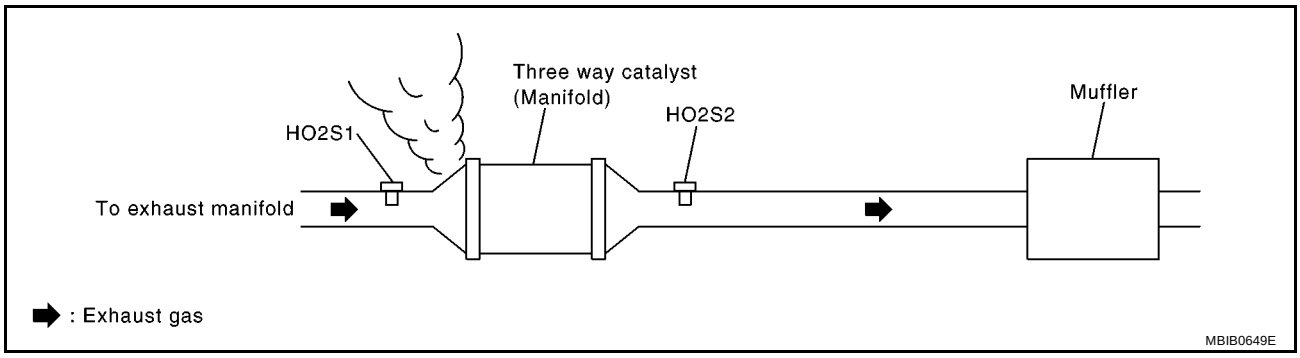

OK or NG

OK >> GO TO 2.
NG >> Repair or replace.

2. CHECK FOR INTAKE AIR LEAK

Listen for an intake air leak after the manifold absolute pressure sensor.

OK or NG

OK >> GO TO 3.
NG >> Repair or replace.

3. CHECK HEATED OXYGEN SENSOR 1 CIRCUIT FOR OPEN AND SHORT

1. Turn ignition switch OFF.
2. Disconnect heated oxygen sensor 1 (HO2S1) harness connector (1).
3. Disconnect ECM harness connector.
4. Check harness continuity between ECM terminal 35 and HO2S1 terminal 4.
   Refer to Wiring Diagram.

   Continuity should exist.

5. Check harness continuity between ECM terminal 35 or HO2S1 terminal 4 and ground.
   Refer to Wiring Diagram.

   Continuity should not exist.

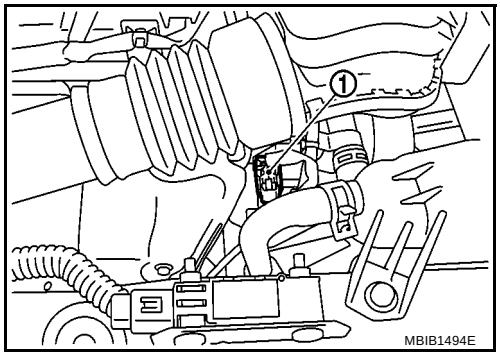

6. Also check harness for short to power.

OK or NG

OK >> GO TO 4.
NG >> Repair open circuit or short to ground or short to power in harness or connectors.

4. CHECK FUEL PRESSURE

1. Release fuel pressure to zero. Refer to EC-71, "FUEL PRESSURE RELEASE" .
2. Install fuel pressure gauge and check fuel pressure. Refer to EC-72, "FUEL PRESSURE CHECK" .

   At idling: 350 kPa (3.5 bar, 3.57 kg/cm2, 51 psi)

OK or NG

OK >> GO TO 6.
NG >> GO TO 5.

5. DETECT MALFUNCTIONING PART

Check the following.

- Fuel pump and circuit (Refer to EC-427, "FUEL PUMP" .)
- Fuel pressure regulator (Refer to EC-71, "Fuel Pressure Check" .)
- Fuel lines (Refer to EM-32, "FUEL INJECTOR AND FUEL TUBE" .)
- Fuel filter for clogging

>> Repair or replace.

6. CHECK MANIFOLD ABSOLUTE PRESSUR SENSOR

With CONSULT-II

1. Install all removed parts.
2. Check manifold absolute pressure sensor signal with CONSULT-II.

Approximately 1.5V:	**at idling**
Approximately 1.2V:	**at 2,500 rpm**

With GST

1. Install all removed parts.
2. Check manifold absolute pressure sensor signal in Service $01 with GST.

Approximately 1.5V:	**at idling**
Approximately 1.2V:	**at 2,500 rpm**

OK or NG

OK >> GO TO 7.

NG >> Check connectors for rusted terminals or loose connections in the manifold absolute pressure sensor circuit or ground. Refer to EC-155, "DTC P0107, P0108 MANIFOLD ABSOLUTE PRESSURE SENSOR" .

7. CHECK FUNCTION OF FUEL INJECTORS

With CONSULT-II

1. Start engine.
2. Perform “POWER BALANCE” in “ACTIVE TEST” mode with CONSULT-II.
3. Make sure that each circuit produces a momentary engine speed drop.

ACTIVE TEST	
POWER BALANCE	
MONITOR	
ENG SPEED	XXX rpm

MBIB0302E

Without CONSULT-II

1. Start engine.
2. Listen to each fuel injector operating sound.

Clicking noise should be heard.

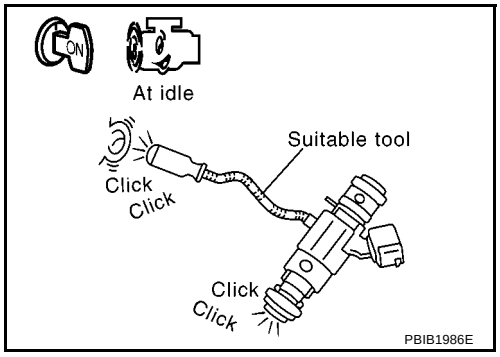

PBIB1986E

OK or NG

OK >> GO TO 8.
NG >> Perform trouble diagnosis for FUEL INJECTOR, refer to EC-421, "FUEL INJECTOR" .

8. CHECK FUEL INJECTOR

1. Remove fuel injector assembly. Refer to EM-32, "FUEL INJECTOR AND FUEL TUBE" .
   Keep fuel hose and all fuel injectors connected to fuel tube.
2. Confirm that the engine is cooled down and there are no fire hazards near the vehicle.
3. Disconnect fuel injector harness connectors.
4. Disconnect all ignition coil harness connectors.
5. Prepare pans or saucers under each fuel injectors.
6. Crank engine for about 3 seconds.
   Make sure fuel does not drip from fuel injector.

OK or NG

OK (Does not drip.)>>GO TO 9.
NG (Drips.)>>Replace the fuel injectors from which fuel is dripping. Always replace O-ring with new one.

9. CHECK INTERMITTENT INCIDENT

Refer to EC-127, "TROUBLE DIAGNOSIS FOR INTERMITTENT INCIDENT" .

>> **INSPECTION END**

DTC P0222, P0223 TP SENSOR

PFP:16119

Component Description

BBS002XN

Electric throttle control actuator consists of throttle control motor, throttle position sensor, etc. The throttle position sensor responds to the throttle valve movement.
The throttle position sensor has the two sensors. These sensors are a kind of potentiometers which transform the throttle valve position into output voltage, and emit the voltage signal to the ECM. In addition, these sensors detect the opening and closing speed of the throttle valve and feed the voltage signals to the ECM. The ECM judges the current opening angle of the throttle valve from these signals and the ECM controls the throttle control motor to make the throttle valve opening angle properly in response to driving condition.

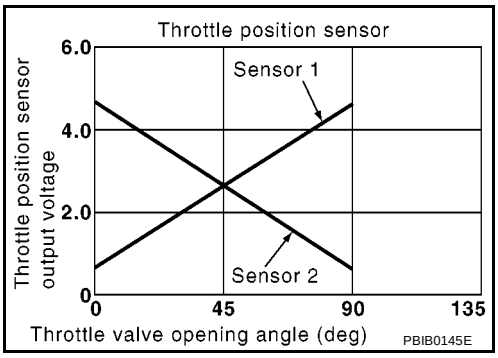

CONSULT-II Reference Value in Data Monitor Mode

BBS002XO

Specification data are reference values.

MONITOR ITEM	CONDITION		SPECIFICATION
THRTL SEN 1 THRTL SEN 2*	● Ignition switch: ON (Engine stopped)	Accelerator pedal: Fully released	More than 0.36V
	● Shift lever: 1st	Accelerator pedal: Fully depressed	Less than 4.75V

*: Throttle position sensor 2 signal is converted by ECM internally. Thus, it differs from ECM terminal voltage signal.

On Board Diagnosis Logic

BBS002XP

These self-diagnoses have the one trip detection logic.

DTC No.	Trouble diagnosis name	DTC detecting condition	Possible cause
P0222 0222	Throttle position sensor 1 circuit low input	An excessively low voltage from the TP sensor 1 is sent to ECM.	● Harness or connectors (TP sensor 1 circuit is open or shorted.) (APP sensor 2 circuit is shorted.) ● Electric throttle control actuator (TP sensor 1) ● Accelerator pedal position sensor (APP sensor 2)
P0223 0223	Throttle position sensor 1 circuit high input	An excessively high voltage from the TP sensor 1 is sent to ECM.	

FAIL-SAFE MODE

When the malfunction is detected, the ECM enters fail-safe mode and the MI lights up.

Engine operation condition in fail-safe mode
The ECM controls the electric throttle control actuator in regulating the throttle opening in order for the idle position to be within +10 degrees. The ECM regulates the opening speed of the throttle valve to be slower than the normal condition. So, the acceleration will be poor.

DTC Confirmation Procedure

BBS002XQ

NOTE:
If DTC Confirmation Procedure has been previously conducted, always turn ignition switch OFF and wait at least 10 seconds before conducting the next test.
TESTING CONDITION:
Before performing the following procedure, confirm that battery voltage is more than 10V at idle.

WITH CONSULT-II

1. Turn ignition switch ON.
2. Select “DATA MONITOR” mode with CONSULT-II.
3. Start engine and let it idle for 1 second.
4. If DTC is detected, go to EC-236, "Diagnostic Procedure" .

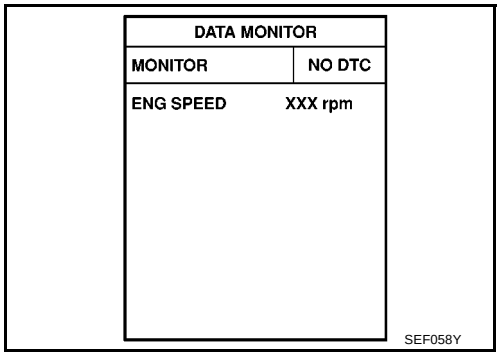

WITH GST

Follow the procedure “WITH CONSULT-II” above.

Wiring Diagram

BBS002XR

EC-TPS1-01

: DETECTABLE LINE FOR DTC
: NON-DETECTABLE LINE FOR DTC

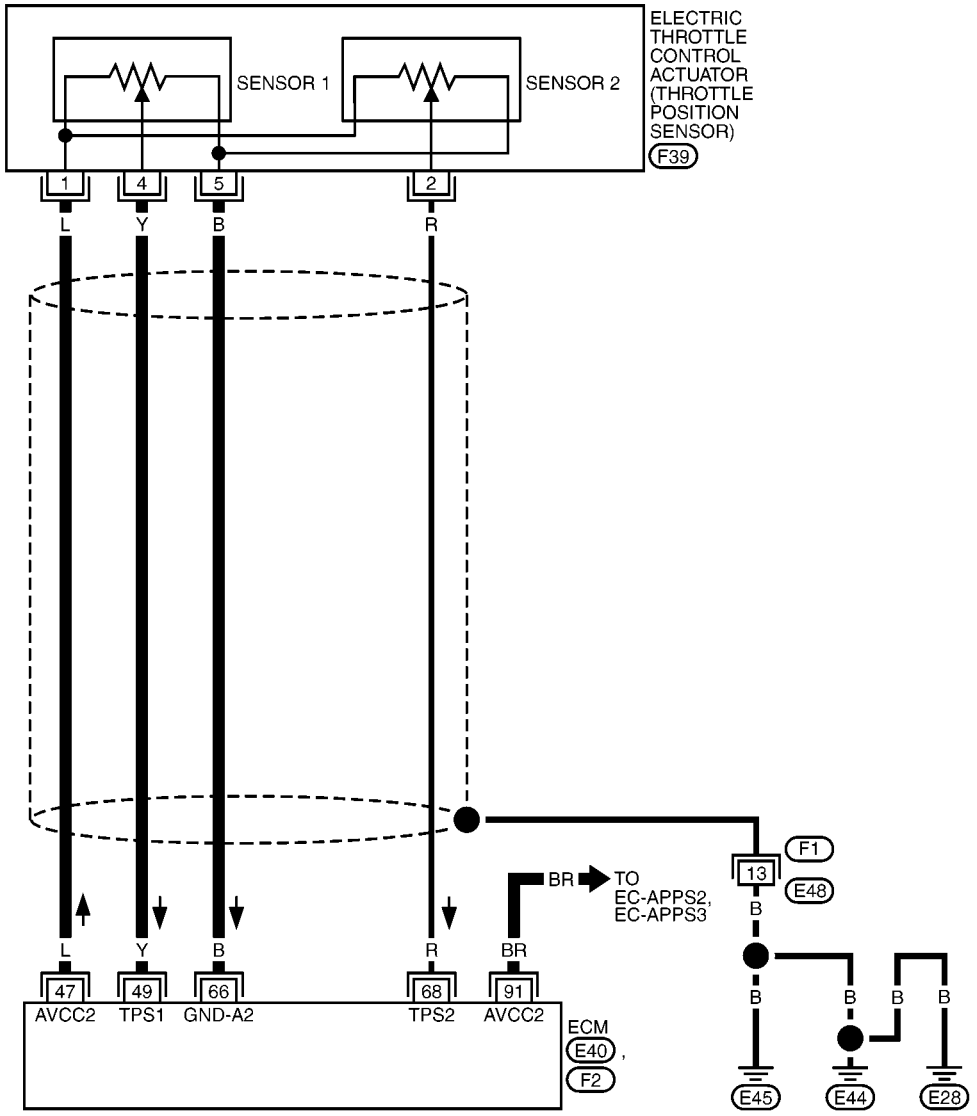

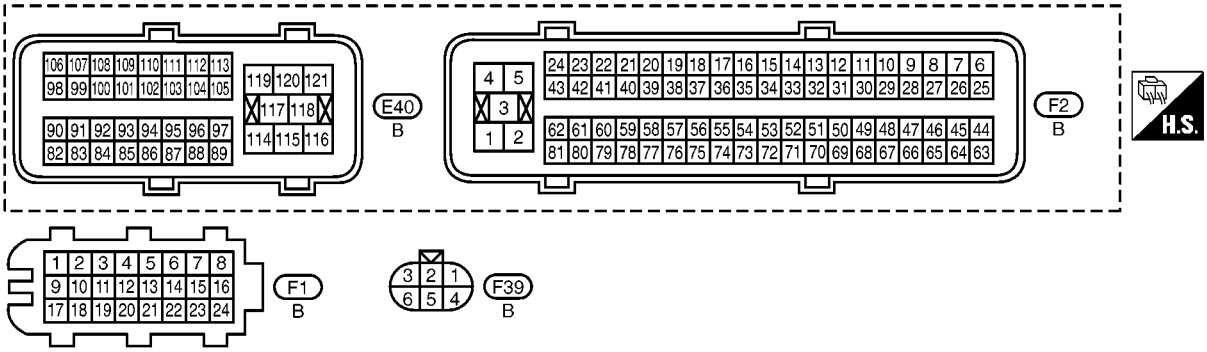

MBWA1513E

Specification data are reference values and are measured between each terminal and ground.

CAUTION:

Do not use ECM ground terminals when measuring input/output voltage. Doing so may result in damage to the ECM's transistor. Use a ground other than ECM terminals, such as the ground.

TERMINAL NO.	WIRE COLOR	ITEM	CONDITION	DATA (DC Voltage)
47	L	Sensor power supply (Throttle position sensor)	**[Ignition switch: ON]**	Approximately 5V
49	Y	Throttle position sensor 1	**[Ignition switch: ON]** ● **Engine stopped** ● Shift lever position: 1st ● Accelerator pedal: Fully released	More than 0.36V
			[Ignition switch: ON] ● **Engine stopped** ● Shift lever position: 1st ● Accelerator pedal: Fully depressed	Less than 4.75V
66	B	Sensor ground (Throttle position sensor)	**[Engine is running]** ● **Warm-up condition** ● Idle speed	Approximately 0V
68	R	Throttle position sensor 2	**[Ignition switch: ON]** ● **Engine stopped** ● Shift lever position: 1st ● Accelerator pedal: Fully released	Less than 4.75V
			[Ignition switch: ON] ● **Engine stopped** ● Shift lever position: 1st ● Accelerator pedal: Fully depressed	More than 0.36V
91	BR	Sensor power supply (APP sensor 2)	**[Ignition switch ON]**	Approximately 5V

Diagnostic Procedure

BBS002XS

1. RETIGHTEN GROUND CONNECTIONS

1. Turn ignition switch OFF.
2. Loosen and retighten ground screws on the body.
   Refer to EC-133, "Ground Inspection" .

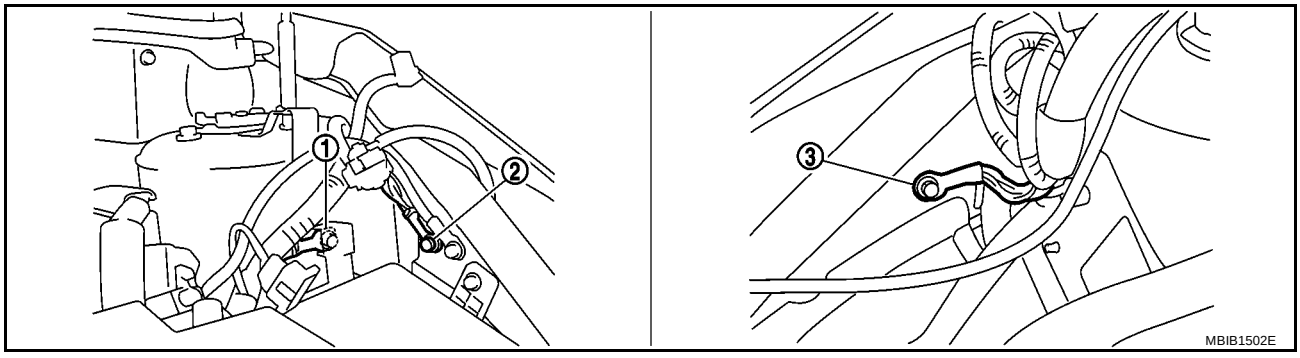

1. Body ground E44
2. Body ground E45
3. Body ground E28

OK or NG

OK >> GO TO 2.
NG >> Repair or replace ground connections.

2. CHECK THROTTLE POSITION SENSOR 1 POWER SUPPLY CIRCUIT-I

1. Disconnect electric throttle control actuator harness connector.
2. Turn ignition switch ON.

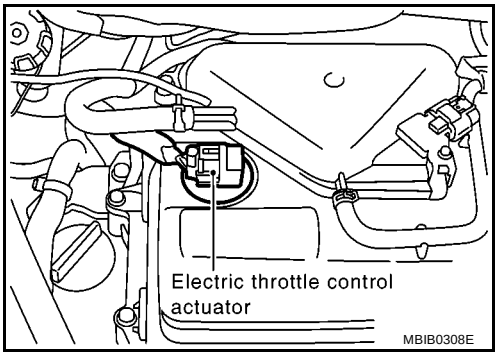

3. Check voltage between electric throttle control actuator terminal 1 and ground with CONSULT-II or tester.

Voltage: Approximately 5V

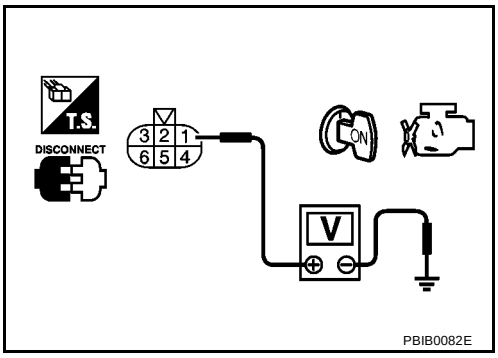

OK or NG

OK >> GO TO 7.
NG >> GO TO 3.

3. CHECK THROTTLE POSITION SENSOR 1 POWER SUPPLY CIRCUIT-II

1. Turn ignition switch OFF.
2. Disconnect ECM harness connector.
3. Check harness continuity between electric throttle control actuator terminal 1 and ECM terminal 47. Refer to Wiring Diagram.

Continuity should exist.

OK or NG

OK >> GO TO 4.
NG >> Repair open circuit.

4. CHECK THROTTLE POSITION SENSOR 1 POWER SUPPLY CIRCUIT-III

Check harness for short to power and short to ground, between the following terminals.

ECM terminal	Sensor terminal	Reference Wiring Diagram
47	Electric throttle control actuator terminal 1	EC-235
91	APP sensor terminal 5	EC-394

OK or NG

OK >> GO TO 5.
NG >> Repair short to ground or short to power in harness or connectors.

5. CHECK APP SENSOR

Refer to EC-400, "Component Inspection" .

OK or NG

OK >> GO TO 11
NG >> GO TO 6.

6. REPLACE ACCELERATOR PEDAL ASSEMBLY

1. Replace accelerator pedal assembly.
2. Perform EC-69, "Accelerator Pedal Released Position Learning" .
3. Perform EC-69, "Throttle Valve Closed Position Learning" .
4. Perform EC-69, "Idle Air Volume Learning" .

>> **INSPECTION END**

7. CHECK THROTTLE POSITION SENSOR 1 GROUND CIRCUIT FOR OPEN AND SHORT

1. Turn ignition switch OFF.
2. Disconnect ECM harness connector.
3. Check harness continuity between ECM terminal 66 and electric throttle control actuator terminal 5. Refer to Wiring Diagram.

Continuity should exist.

4. Also check harness for short to ground and short to power.

OK or NG

OK >> GO TO 8.
NG >> Repair open circuit or short to ground or short to power in harness or connectors.

8. CHECK THROTTLE POSITION SENSOR 1 INPUT SIGNAL CIRCUIT FOR OPEN AND SHORT

1. Check harness continuity between ECM terminal 49 and electric throttle control actuator terminal 4. Refer to Wiring Diagram.

Continuity should exist.

2. Also check harness for short to ground and short to power.

OK or NG

OK >> GO TO 9.
NG >> Repair open circuit or short to ground or short to power in harness or connectors.

9. CHECK THROTTLE POSITION SENSOR

Refer to EC-239, "Component Inspection" .

OK or NG

OK >> GO TO 11.
NG >> GO TO 10.

10. REPLACE ELECTRIC THROTTLE CONTROL ACTUATOR

1. Replace the electric throttle control actuator.
2. Perform EC-69, "Throttle Valve Closed Position Learning" .
3. Perform EC-69, "Idle Air Volume Learning" .

>> **INSPECTION END**

11. CHECK INTERMITTENT INCIDENT

Refer to EC-127, "TROUBLE DIAGNOSIS FOR INTERMITTENT INCIDENT" .

>> **INSPECTION END**

Component Inspection

BBS002XT

THROTTLE POSITION SENSOR

1. Reconnect all harness connectors disconnected.
2. Perform EC-69, "Throttle Valve Closed Position Learning" .
3. Turn ignition switch ON.
4. Set shift lever to 1st position.
5. Check voltage between ECM terminals 49 (TP sensor 1 signal), 68 (TP sensor 2 signal) and ground under the following conditions.

Terminal	Accelerator pedal	Voltage
49 (Throttle position sensor 1)	Fully released	More than 0.36V
	Fully depressed	Less than 4.75V
68 (Throttle position sensor 2)	Fully released	Less than 4.75V
	Fully depressed	More than 0.36V

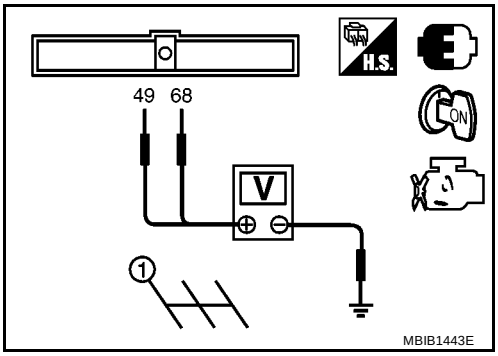

6. If NG, replace electric throttle control actuator and go to the next step.
7. Perform EC-69, "Throttle Valve Closed Position Learning" .
8. Perform EC-69, "Idle Air Volume Learning" .

Removal and Installation

BBS002XU

ELECTRIC THROTTLE CONTROL ACTUATOR

Refer to EM-18, "AIR CLEANER AND AIR DUCT" .

DTC P0300 - P0304 MULTIPLE CYLINDER MISFIRE, NO. 1 - 4 CYLINDER MISFIRE

PFP:00000

On Board Diagnosis Logic

BBS002XV

When a misfire occurs, engine speed will fluctuate. If the engine speed fluctuates enough to cause the crankshaft position (CKP) sensor (POS) signal to vary, ECM can determine that a misfire is occurring.

Sensor	Input Signal to ECM	ECM Function
Crankshaft position sensor (POS)	Engine speed	On board diagnosis of misfire

The misfire detection logic consists of the following two conditions.

1. One Trip Detection Logic (Three Way Catalyst Damage)
   On the first trip that a misfire condition occurs that can damage the three way catalyst (TWC) due to overheating, the MI will blink.
   When a misfire condition occurs, the ECM monitors the CKP sensor (POS) signal every 200 engine revolutions for a change.
   When the misfire condition decreases to a level that will not damage the TWC, the MI will turn off.
   If another misfire condition occurs that can damage the TWC on a second trip, the MI will blink.
   When the misfire condition decreases to a level that will not damage the TWC, the MI will remain on.
   If another misfire condition occurs that can damage the TWC, the MI will begin to blink again.
2. Two Trip Detection Logic (Exhaust quality deterioration)
   For misfire conditions that will not damage the TWC (but will affect vehicle emissions), the MI will only light when the misfire is detected on a second trip. During this condition, the ECM monitors the CKP sensor signal every 1,000 engine revolutions.
   A misfire malfunction can be detected on any one cylinder or on multiple cylinders.

DTC No.	Trouble diagnosis name	DTC detecting condition	Possible cause
P0300 0300	Multiple cylinder misfire detected	Multiple cylinder misfire.	● Improper spark plug ● Insufficient compression ● Incorrect fuel pressure ● The fuel injector circuit is open or shorted ● Fuel injector ● Intake air leak ● The ignition signal circuit is open or shorted ● Lack of fuel ● Drive plate or flywheel ● Heated oxygen sensor 1 ● Incorrect PCV hose connection
P0301 0301	No.1 cylinder misfire detected	No. 1 cylinder misfires.	
P0302 0302	No. 2 cylinder misfire detected	No. 2 cylinder misfires.	
P0303 0303	No. 3 cylinder misfire detected	No. 3 cylinder misfires.	
P0304 0304	No. 4 cylinder misfire detected	No. 4 cylinder misfires.	

DTC Confirmation Procedure

BBS002XW

CAUTION:

Always drive vehicle in safe manner according to traffic conditions and obey all traffic laws when driving.

NOTE:

If DTC Confirmation Procedure has been previously conducted, always turn ignition switch OFF and wait at least 10 seconds before conducting the next test.

WITH CONSULT-II

1. Turn ignition switch ON, and select “DATA MONITOR” mode with CONSULT-II.
2. Start engine and warm it up to normal operating temperature.
3. Turn ignition switch OFF and wait at least 10 seconds.
4. Restart engine and let it idle for about 15 minutes.
5. If 1st trip DTC is detected, go to EC-241, "Diagnostic Procedure".

   NOTE:
   If 1st trip DTC is not detected during above procedure, performing the following procedure is advised.

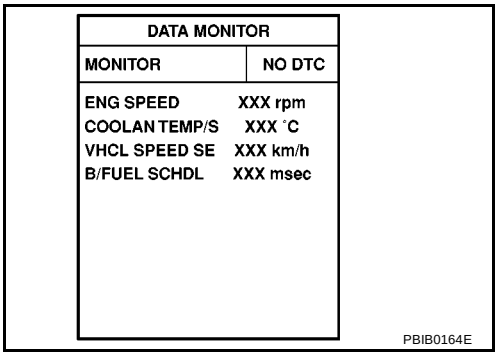

a. Turn ignition switch OFF and wait at least 10 seconds.
b. Start engine and drive the vehicle under the similar conditions to (1st trip) Freeze Frame Data for a certain time. Refer to the table below.
   Hold the accelerator pedal as steady as possible.

   The similar conditions to (1st trip) Freeze Frame Data means the vehicle operation that the following conditions should be satisfied at the same time.

Engine speed	Engine speed in the freeze frame data ± 400 rpm
Vehicle speed	Vehicle speed in the feaze frame data ± 10 km/h (6 MPH)
Engine coolant temperature (T) condition	When the freeze frame data shows lower than 70 °C (158 °F), T should be lower than 70 °C (158 °F).
	When the freeze frame data shows higher than or equal to 70 °C (158 °F), T should be higher than or equal to 70 °C (158 °F).

The time to driving varies according to the engine speed in the freeze frame data.

Engine speed	Time
Around 1,000 rpm	Approximately 10 minutes
Around 2,000 rpm	Approximately 5 minutes
More than 3,000 rpm	Approximately 3.5 minutes

WITH GST

Follow the procedure “WITH CONSULT-II” above.

Diagnostic Procedure

BBS002XX

1. CHECK FOR INTAKE AIR LEAK AND PCV HOSE

1. Start engine and run it at idle speed.
2. Listen for the sound of the intake air leak.
3. Check PCV hose connection.

OK or NG

OK >> GO TO 2.
NG >> Repair or replace.

2. CHECK FOR EXHAUST SYSTEM CLOGGING

Stop engine and visually check exhaust tube, three way catalyst and muffler for dents.

OK or NG

OK >> GO TO 3.
NG >> Repair or replace.

3. PERFORM POWER BALANCE TEST

With CONSULT-II

1. Perform “POWER BALANCE” in “ACTIVE TEST” mode.
2. Is there any cylinder which does not produce a momentary engine speed drop?

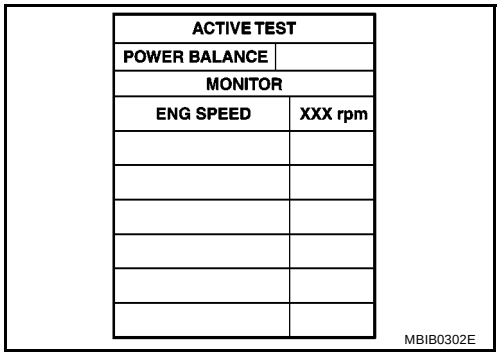

Without CONSULT-II

When disconnecting each fuel injector harness connector (1) one at a time, is there any cylinder which does not produce a momentary engine speed drop?

- ⇦: Vehicle front

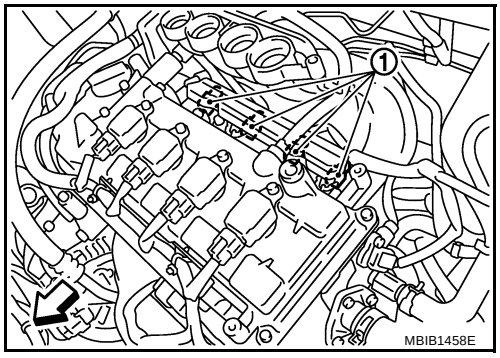

Yes or No

Yes >> GO TO 4.
No >> GO TO 9.

4. CHECK FUEL INJECTOR

Does each fuel injector make an operating sound at idle?

Yes or No

Yes >> GO TO 5.
No >> Check fuel injector(s) and circuit(s). Refer to EC-421, "FUEL INJECTOR" .

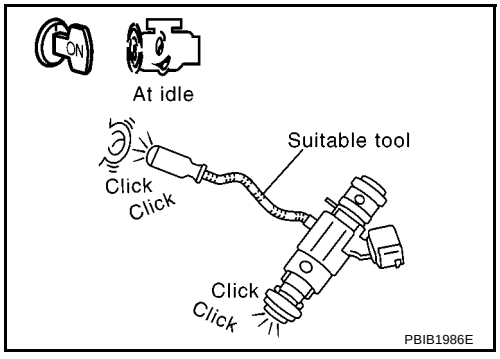

5. CHECK FUNCTION OF IGNITION COIL-I

CAUTION:
Do the following procedure in the place where ventilation is good without the combustibles.

1. Turn ignition switch OFF.
2. Remove fuel pump fuse in IPDM E/R to release fuel pressure.

   NOTE:
   Do not use CONSULT-II to release fuel pressure, or fuel pressure applies again during the following procedure.
3. Start engine.
4. After engine stalls, crank it two or three times to release all fuel pressure.
5. Turn ignition switch ON.
6. Remove all ignition coil harness connectors to avoid the electrical discharge from the ignition coils.
7. Remove ignition coil and spark plug of the cylinder to be checked.

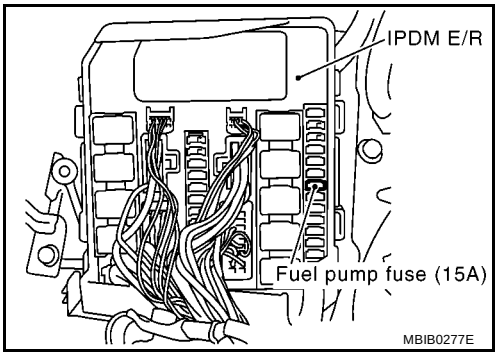

8. Crank engine for five seconds or more to remove combustion gas in the cylinder.
9. Connect spark plug and harness connector to ignition coil.
10. Fix ignition coil using a rope etc. with gap of 13 - 17 mm between the edge of the spark plug and grounded metal portion as shown in the figure.
11. Crank engine for about three seconds, and check whether spark is generated between the spark plug and the grounded metal portion.

    Spark should be generated.

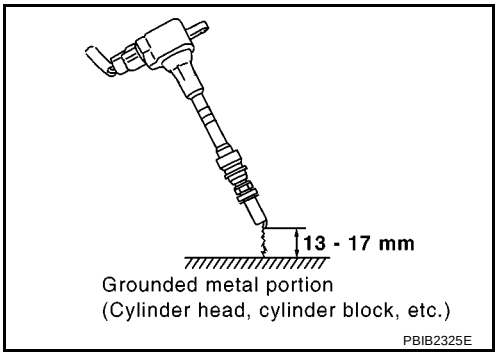

CAUTION:
- **Do not approach to the spark plug and the ignition coil within 50cm. Be careful not to get an electrical shock while checking, because the electrical discharge voltage becomes 20kV or more.**
- **It might cause to damage the ignition coil if the gap of more than 17 mm is taken.**

NOTE:
When the gap is less than 13 mm, the spark might be generated even if the coil is malfunctioning.

OK or NG

OK >> GO TO 9.
NG >> GO TO 6.

6. CHECK FUNCTION OF IGNITION COIL-II

1. Turn ignition switch OFF.
2. Disconnect spark plug and connect a known-good spark plug.
3. Crank engine for about three seconds, and recheck whether spark is generated between the spark plug and the grounded metal portion.

   Spark should be generated.

OK or NG

OK >> GO TO 7.
NG >> Check ignition coil, power transistor and their circuits, Refer to EC-433, "IGNITION SIGNAL" .

7. CHECK SPARK PLUGS

Check the initial spark plug for fouling, etc.

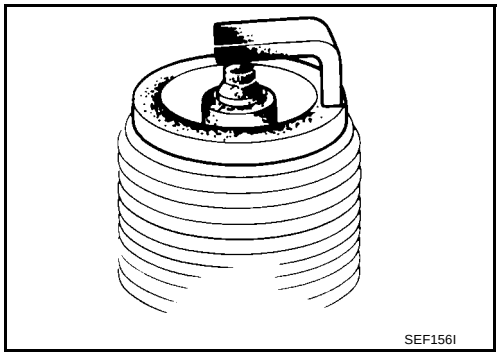

OK or NG

OK >> Replace spark plug(s) with standard type one(s). For spark plug type, refer to MA-36, "Changing Spark Plugs" .

NG >> 1. Repair or clean spark plug.
2. GO TO 8.

8. CHECK FUNCTION OF IGNITION COIL-III

1. Reconnect the initial spark plugs.
2. Crank engine for about three seconds, and recheck whether spark is generated between the spark plug and the grounded portion.

Spark should be generated.

OK or NG

OK >> **INSPECTION END**

NG >> Replace spark plug(s) with standard type one(s). For spark plug type, refer to MA-36, "Changing Spark Plugs" .

9. CHECK COMPRESSION PRESSURE

Check compression pressure. Refer to EM-60, "COMPRESSION PRESSURE INSPECTION" .

OK or NG

OK >> GO TO 10.

NG >> Check pistons, piston rings, valves, valve seats and cylinder head gaskets.

10. CHECK FUEL PRESSURE

1. Install all removed parts.
2. Release fuel pressure to zero. Refer to EC-71, "FUEL PRESSURE RELEASE" .
3. Install fuel pressure gauge and check fuel pressure. Refer to EC-72, "FUEL PRESSURE CHECK" .

At idle: Approx. 350 kPa (3.5 bar, 3.57 kg/cm^2 , 51 psi)

OK or NG

OK >> GO TO 12.

NG >> GO TO 11.

11. DETECT MALFUNCTIONING PART

Check the following.

- Fuel pump and circuit (Refer to EC-427, "FUEL PUMP" .)
- Fuel pressure regulator (Refer to EC-71, "Fuel Pressure Check" .)
- Fuel lines (Refer to EM-32, "FUEL INJECTOR AND FUEL TUBE" .)
- Fuel filter for clogging

>> Repair or replace.

12. CHECK HEATED OXYGEN SENSOR 1

Refer to EC-183, "Component Inspection" .

OK or NG

OK >> GO TO 13.
NG >> Replace heated oxygen sensor 1.

13. CHECK MANIFOLD ABSOLUTE PRESSUR SENSOR

With CONSULT-II

Check manifold absolute pressure sensor signal in “DATA MONITOR” mode with CONSULT-II.

Approximately 1.5V:	**at idling**
Approximately 1.2V:	**at 2,500 rpm**

With GST

Check manifold absolute pressure sensor signal in Service $01 with GST.

Approximately 1.5V:	**at idling**
Approximately 1.2V:	**at 2,500 rpm**

OK or NG

OK >> GO TO 14.
NG >> Check connectors for rusted terminals or loose connections in the manifold absolute pressure sensor circuit or ground. Refer to EC-155, "DTC P0107, P0108 MANIFOLD ABSOLUTE PRESSURE SENSOR" .

14. CHECK SYMPTOM MATRIX CHART

Check items on the rough idle symptom in EC-82, "Symptom Matrix Chart" .

OK or NG

OK >> GO TO 15.
NG >> Repair or replace.

15. ERASE THE 1ST TRIP DTC

Some tests may cause a 1st trip DTC to be set.
Erase the 1st trip DTC from the ECM memory after performing the tests. Refer to EC-57, "HOW TO ERASE EMISSION-RELATED DIAGNOSTIC INFORMATION" .

>> GO TO 16.

16. CHECK INTERMITTENT INCIDENT

Refer to EC-127, "TROUBLE DIAGNOSIS FOR INTERMITTENT INCIDENT" .

>> **INSPECTION END**

DTC P0327, P0328 KS

PFP:22060

Component Description

BBS002XY

The knock sensor is attached to the cylinder block. It senses engine knocking using a piezoelectric element. A knocking vibration from the cylinder block is sensed as vibrational pressure. This pressure is converted into a voltage signal and sent to the ECM.

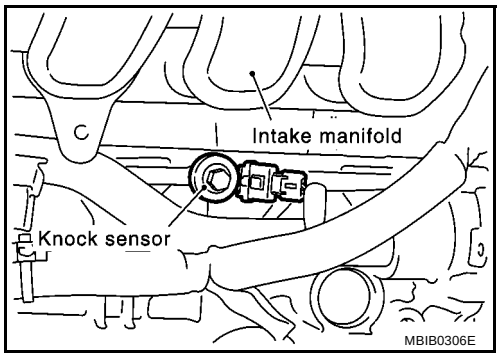

On Board Diagnosis Logic

BBS002XZ

The MI will not light up for these self-diagnoses.

DTC No.	Trouble Diagnosis Name	DTC Detected Condition	Possible Cause
P0327 0327	Knock sensor circuit low input	An excessively low voltage from the sensor is sent to ECM.	● Harness or connectors (The sensor circuit is open or shorted.) ● Knock sensor
P0328 0328	Knock sensor circuit high input	An excessively high voltage from the sensor is sent to ECM.	

DTC Confirmation Procedure

BBS002Y0

NOTE:
If DTC Confirmation Procedure has been previously conducted, always turn ignition switch OFF and wait at least 10 seconds before conducting the next test.
TESTING CONDITION:
Before performing the following procedure, confirm that battery voltage is more than 10V at idle.

WITH CONSULT-II

1. Turn ignition switch ON and select “DATA MONITOR” mode with CONSULT-II.
2. Start engine and run it for at least 5 seconds at idle speed.
3. If 1st trip DTC is detected, go to EC-248, "Diagnostic Procedure"
.

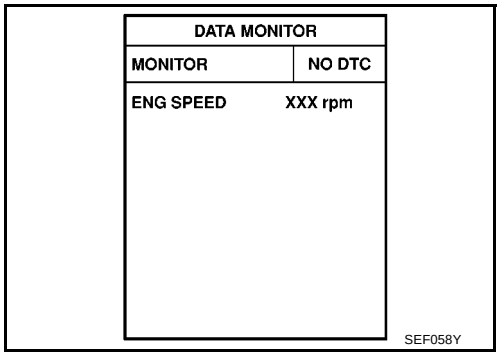

WITH GST

Follow the procedure “WITH CONSULT-II” above.

Wiring Diagram

BBS002Y1

EC-KS-01

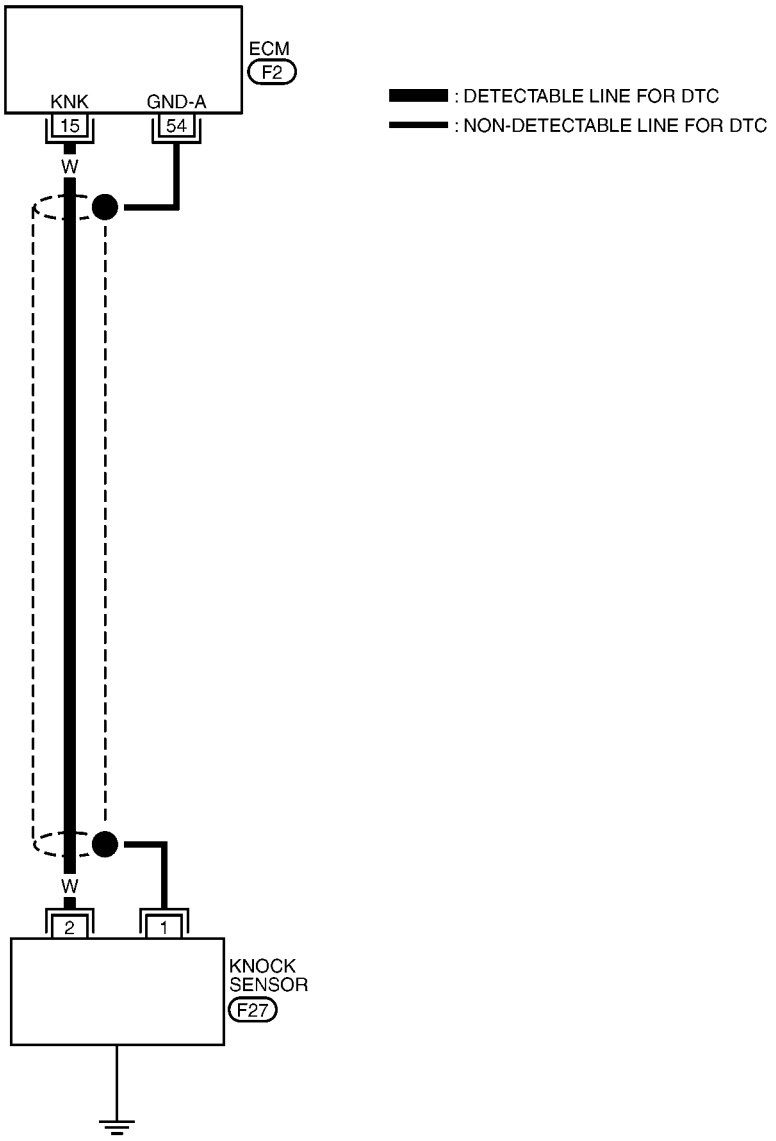

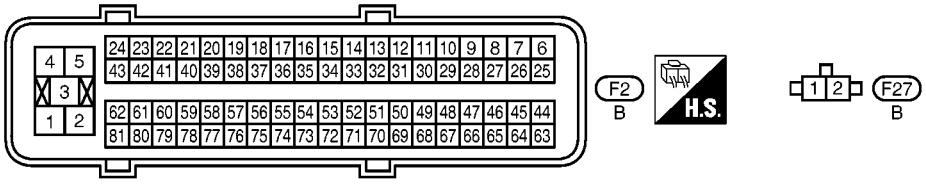

MBWA0571E

Specification data are reference values and are measured between each terminal and ground.

CAUTION:
Do not use ECM ground terminals when measuring input/output voltage. Doing so may result in damage to the ECM's transistor. Use a ground other than ECM terminals, such as the ground.

TERMINAL NO.	WIRE COLOR	ITEM	CONDITION	DATA (DC Voltage)
15	W	Knock sensor	**[Engine is running]** ● Idle speed	Approximately 2.5V
54	—	Sensor ground (Knock sensor)	**[Engine is running]** ● **Warm-up condition** ● Idle speed	Approximately 0V

Diagnostic Procedure

BBS002Y2

1. CHECK KNOCK SENSOR INPUT SIGNAL CIRCUIT-I

1. Turn ignition switch OFF.
2. Disconnect ECM harness connector.
3. Check resistance between ECM terminal 15 and ground. Refer to Wiring Diagram.

   NOTE:
   It is necessary to use an ohmmeter which can measure more than 10 MΩ.

   Resistance: Approximately 530 - 590kΩ [at 20°C (68°F)]

4. Also check harness for short to ground and short to power.

OK or NG

OK >> GO TO 4.
NG >> GO TO 2.

2. CHECK KNOCK SENSOR INPUT SIGNAL CIRCUIT-II

1. Disconnect knock sensor harness connector.
2. Check harness continuity between ECM terminal 15 and knock sensor terminal 2.
   Refer to Wiring Diagram.

   Continuity should exist.

3. Also check harness for short to ground and short to power.

OK or NG

OK >> GO TO 3.
NG >> Repair open circuit or short to ground or short to power in harness or connectors.

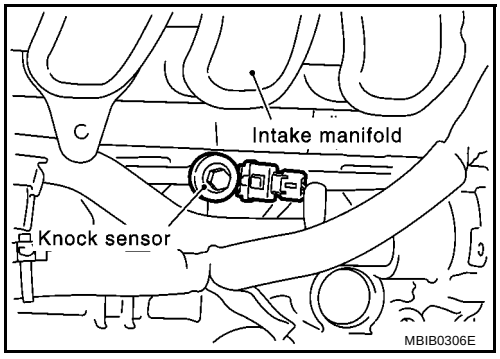

3. CHECK KNOCK SENSOR

Refer to EC-249, "Component Inspection" .

OK or NG

OK >> GO TO 6.
NG >> Replace knock sensor.

4. CHECK GROUND CONNECTIONS

1. Loosen and retighten ground screws on the body.
   Refer to EC-133, "Ground Inspection" .

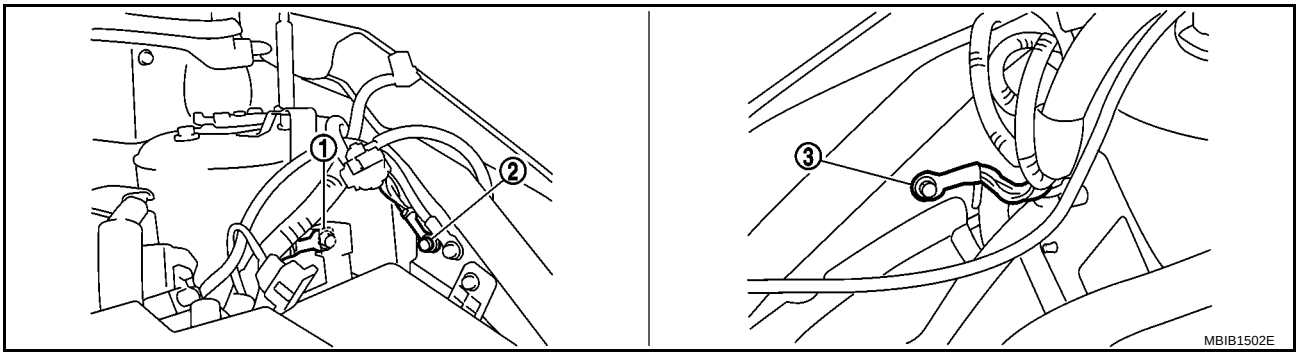

1. Body ground E44
2. Body ground E45
3. Body ground E28

OK or NG

OK >> GO TO 5.
NG >> Repair or replace ground connections.

5. CHECK KNOCK SENSOR SHIELD CIRCUIT FOR OPEN AND SHORT

1. Check harness continuity between ECM terminal 54 and knock sensor terminal 1.
   Refer to Wiring Diagram.

   Continuity should exist

2. Also check harness for short to ground and short to power.

OK or NG

OK >> GO TO 6.
NG >> Repair open circuit or short to ground or short to power in harness or connectors.

6. CHECK INTERMITTENT INCIDENT

Refer to EC-127, "TROUBLE DIAGNOSIS FOR INTERMITTENT INCIDENT" .

>> **INSPECTION END**

Component Inspection

BBS002Y3

KNOCK SENSOR

Check resistance between knock sensor terminal 2 and ground.

NOTE:
It is necessary to use an ohmmeter which can measure more than 10 MΩ.

Resistance: Approximately 530 - 590kΩ [at 20°C (68°F)]

CAUTION:
Do not use any knock sensors that have been dropped or physically damaged. Use only new ones.

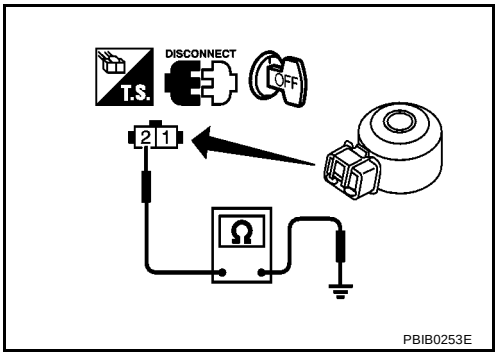

Removal and Installation

BBS002Y4

KNOCK SENSOR

Refer to EM-74, "CYLINDER BLOCK" .

DTC P0335 CKP SENSOR (POS)

PFP:23731

Component Description

BBS002Y5

The crankshaft position sensor (POS) is located on the cylinder block rear housing facing the gear teeth (cogs) of the signal plate at the end of the crankshaft. It detects the fluctuation of the engine revolution.
The sensor consists of a permanent magnet and Hall IC.
When the engine is running, the high and low parts of the teeth cause the gap with the sensor to change.
The changing gap causes the magnetic field near the sensor to change.
Due to the changing magnetic field, the voltage from the sensor changes.
The ECM receives the voltage signal and detects the fluctuation of the engine revolution.
ECM receives the signals as shown in the figure.

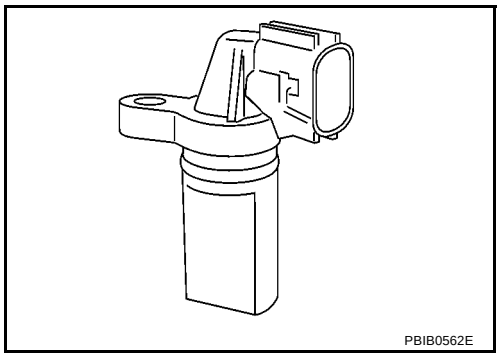

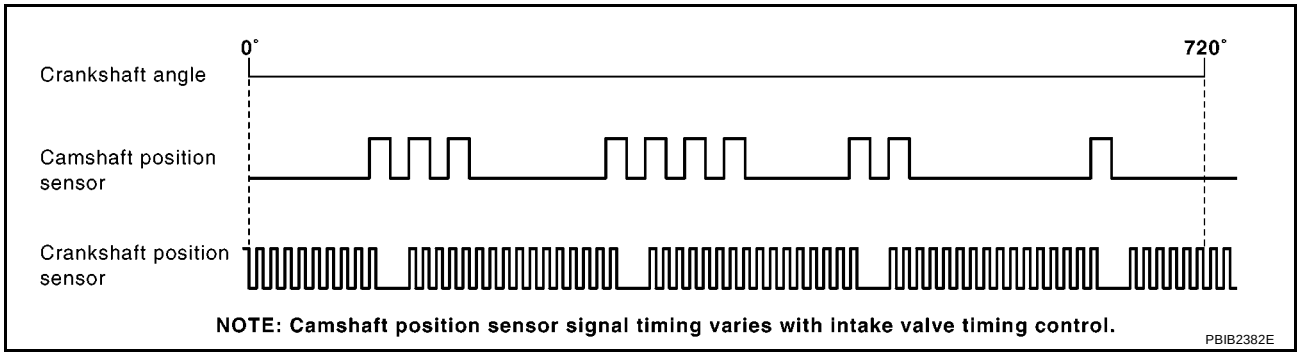

CONSULT-II Reference Value in Data Monitor Mode

BBS002Y6

Specification data are reference values.

MONITOR ITEM	CONDITION	SPECIFICATION
ENG SPEED	● Run engine and compare CONSULT-II value with the tachometer indication.	Almost the same speed as the tachometer indication.

On Board Diagnosis Logic

BBS002Y7

DTC No.	Trouble diagnosis name	DTC detecting condition	Possible cause
P0335 0335	Crankshaft position sensor (POS) circuit	● The crankshaft position sensor (POS) signal is not detected by the ECM during the first few seconds of engine cranking. ● The proper pulse signal from the crankshaft position sensor (POS) is not sent to ECM while the engine is running. ● The crankshaft position sensor (POS) signal is not in the normal pattern during engine running.	● Harness or connectors (The sensor circuit is open or shorted.) ● Crankshaft position sensor (POS) ● Signal plate

DTC Confirmation Procedure

BBS002Y8

NOTE:
If DTC Confirmation Procedure has been previously conducted, always turn ignition switch OFF and wait at least 10 seconds before conducting the next test.
TESTING CONDITION:
Before performing the following procedure, confirm that battery voltage is more than 10.5V with ignition switch ON.

WITH CONSULT-II

1. Turn ignition switch ON and select “DATA MONITOR” mode with CONSULT-II.
2. Crank engine for at least 2 seconds and run it for at least 5 seconds at idle speed.
3. If 1st trip DTC is detected, go to EC-254, "Diagnostic Procedure".

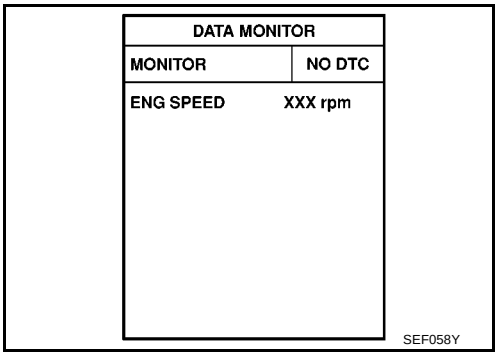

WITH GST

Follow the procedure “WITH CONSULT-II” above.

Wiring Diagram

BBS002Y9

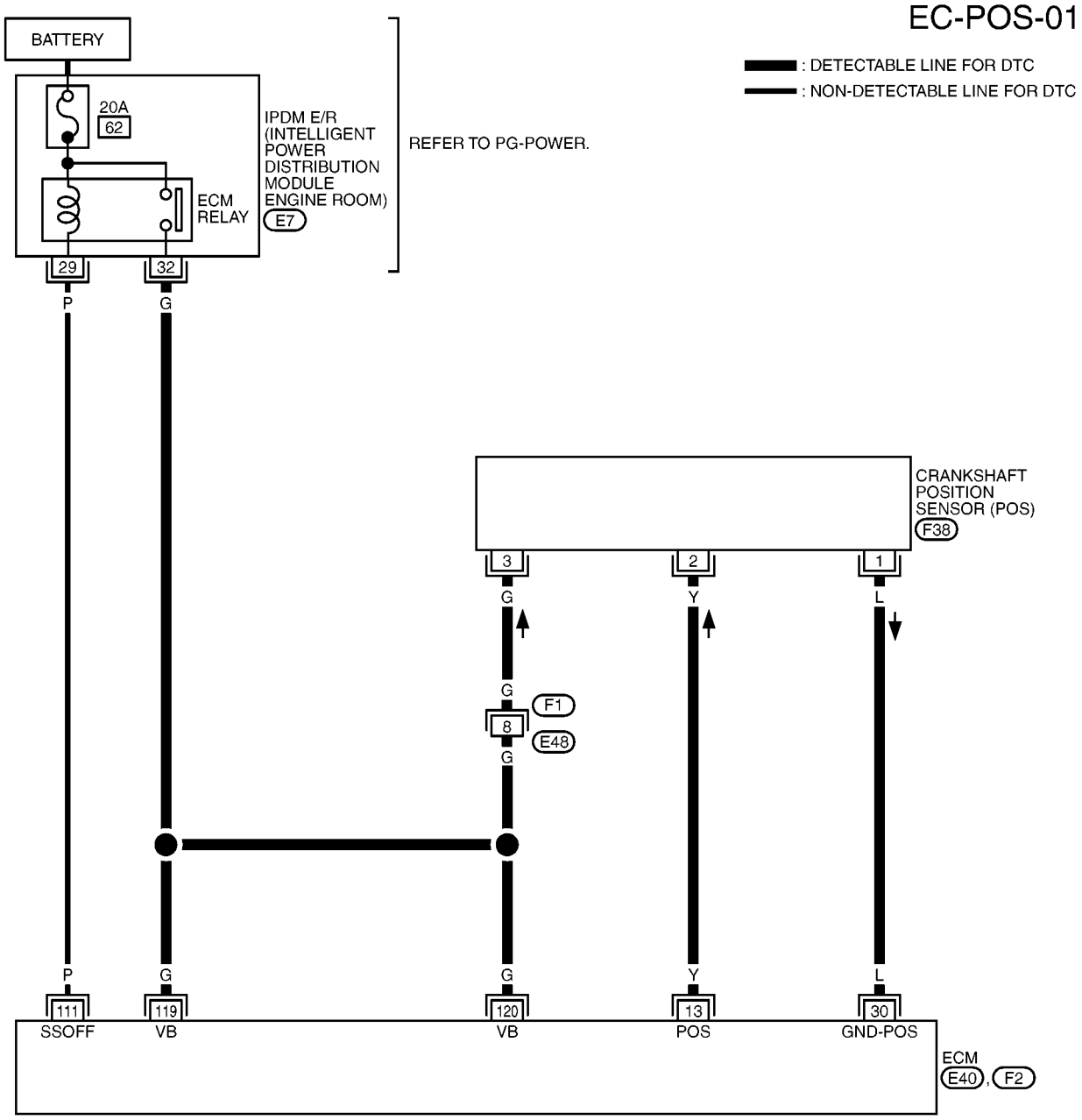

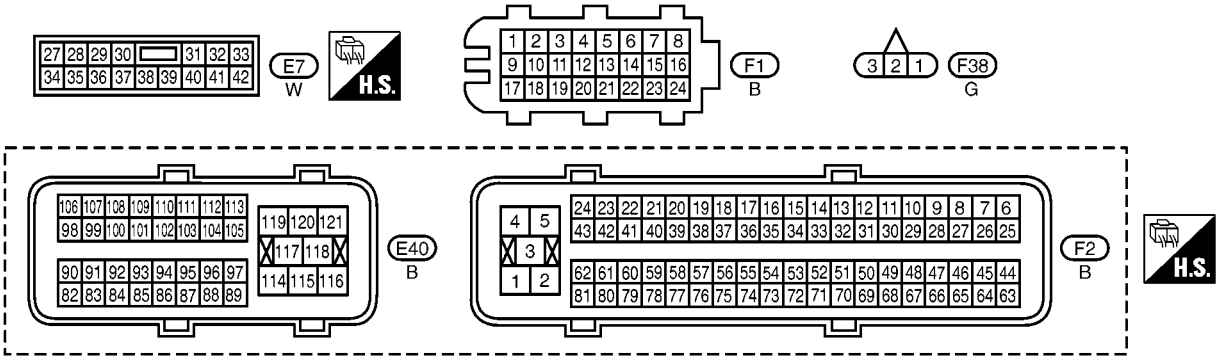

MBWA1515E

Specification data are reference values and are measured between each terminal and ground.
Pulse signal is measured by CONSULT-II.

CAUTION:
Do not use ECM ground terminals when measuring input/output voltage. Doing so may result in damage to the ECM's transistor. Use a ground other than ECM terminals, such as the ground.

TERMINAL NO.	WIRE COLOR	ITEM	CONDITION	DATA (DC Voltage)
13	Y	Crankshaft position sensor (POS)	**[Engine is running]** ● **Warm-up condition** ● Idle speed **NOTE:** The pulse cycle changes depending on rpm at idle.	Approximately 3.0V★ 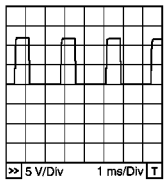 PBIB0527E
			[Engine is running] ● Engine speed: 2,000 rpm	Approximately 3.0V★ 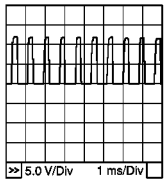 PBIB0528E
30	L	Sensor ground (Crankshaft position sensor)	**[Engine is running]** ● **Warm-up condition** ● Idle speed	Approximately 0V
111	P	ECM relay (Self shut-off)	**[Engine is running]** **[Ignition switch: OFF]** ● For a few seconds after turning ignition switch OFF	0 - 1.0V
			[Ignition switch: OFF] ● More than a few seconds passed after turning ignition switch OFF	BATTERY VOLTAGE (11 - 14V)
119 120	G G	Power supply for ECM	**[Ignition switch: ON]**	BATTERY VOLTAGE (11 - 14V)

★: Average voltage for pulse signal (Actual pulse signal can be confirmed by oscilloscope.)

Diagnostic Procedure

BBS002YA

1. CHECK GROUND CONNECTIONS

1. Turn ignition switch OFF.
2. Loosen and retighten ground screws on the body.
   Refer to EC-133, "Ground Inspection" .

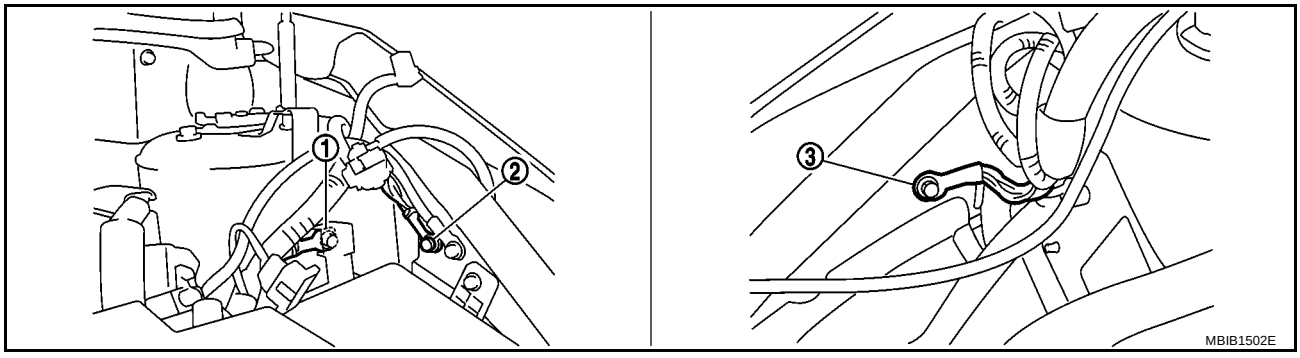

1. Body ground E44
2. Body ground E45
3. Body ground E28

OK or NG

OK >> GO TO 2.
NG >> Repair or replace ground connections.

2. CHECK CRANKSHAFT POSITION (CKP) SENSOR (POS) POWER SUPPLY CIRCUIT

1. Disconnect crankshaft position (CKP) sensor (POS) harness connector.
2. Turn ignition switch ON.

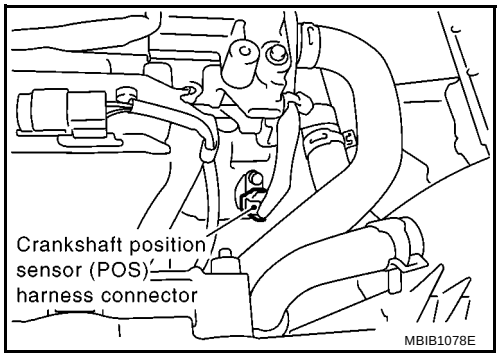

3. Check voltage between CKP sensor (POS) terminal 3 and ground with CONSULT-II or tester.

   Voltage: Battery voltage

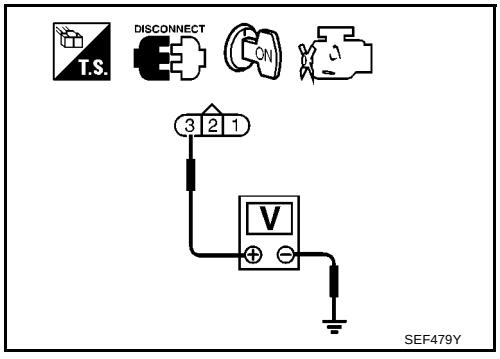

OK or NG

OK >> GO TO 4.
NG >> GO TO 3.

3. DETECT MALFUNCTIONING PART

Check the following.

- Harness connectors F1, E48
- Harness for open or short between crankshaft position sensor (POS) and ECM
- Harness for open or short between crankshaft position sensor (POS) and IPDM E/R

>> Repair open circuit or short to ground or short to power in harness or connectors.

4. CHECK CKP SENSOR (POS) GROUND CIRCUIT FOR OPEN AND SHORT

1. Turn ignition switch OFF.
2. Disconnect ECM harness connector.
3. Check harness continuity between ECM terminal 30 and CKP sensor (POS) terminal 1.
   Refer to Wiring Diagram.

   Continuity should exist.

4. Also check harness for short to ground and short to power.

OK or NG

OK >> GO TO 5.
NG >> Repair open circuit or short to ground or short to power in harness or connectors.

5. CHECK CKP SENSOR (POS) INPUT SIGNAL CIRCUIT FOR OPEN AND SHORT

1. Check harness continuity between ECM terminal 13 and CKP sensor (POS) terminal 2.
   Refer to Wiring Diagram.

   Continuity should exist.

2. Also check harness for short to ground and short to power.

OK or NG

OK >> GO TO 6.
NG >> Repair open circuit or short to ground or short to power in harness or connectors.

6. CHECK CRANKSHAFT POSITION SENSOR (POS)

Refer to EC-256, "Component Inspection" .

OK or NG

OK >> GO TO 7.
NG >> Replace crankshaft position sensor (POS).

7. CHECK GEAR TOOTH

Visually check for chipping signal plate gear tooth.

OK or NG

OK >> GO TO 8.
NG >> Replace the signal plate.

8. CHECK INTERMITTENT INCIDENT

Refer to EC-127, "TROUBLE DIAGNOSIS FOR INTERMITTENT INCIDENT" .

>> **INSPECTION END**

Component Inspection

BBS002YB

CRANKSHAFT POSITION SENSOR (POS)

1. Loosen the fixing bolt of the sensor.
2. Disconnect crankshaft position sensor (POS) harness connector.
3. Remove the sensor.
4. Visually check the sensor for chipping.

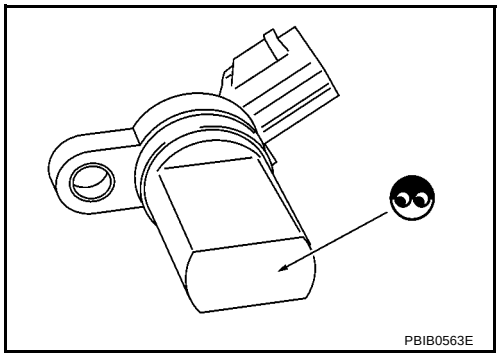

5. Check resistance as shown in the figure.

Terminal No. (Polarity)	Resistance Ω [at 25°C (77°F)]
3 (+) - 1 (-)	Except 0 or ∞
3 (+) - 2 (-)	
2 (+) - 1 (-)	

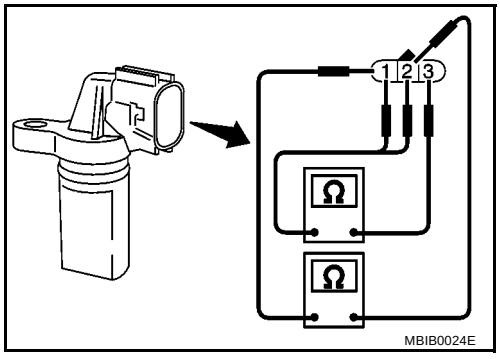

6. If NG, replace crankshaft position sensor (POS).

Removal and Installation

BBS002YC

CRANKSHAFT POSITION SENSOR (POS)

Refer to EM-74, "CYLINDER BLOCK" .

DTC P0340 CMP SENSOR (PHASE)

PFP:23731

Component Description

BBS002YD

The camshaft position sensor (PHASE) senses the retraction of camshaft (intake) to identify a particular cylinder. The camshaft position sensor (PHASE) senses the piston position.
When the crankshaft position sensor (POS) system becomes inoperative, the camshaft position sensor (PHASE) provides various controls of engine parts instead, utilizing timing of cylinder identification signals.
The sensor consists of a permanent magnet and Hall IC.
When engine is running, the high and low parts of the teeth cause the gap with the sensor to change.
The changing gap causes the magnetic field near the sensor to change.
Due to the changing magnetic field, the voltage from the sensor changes.
ECM receives the signals as shown in the figure.

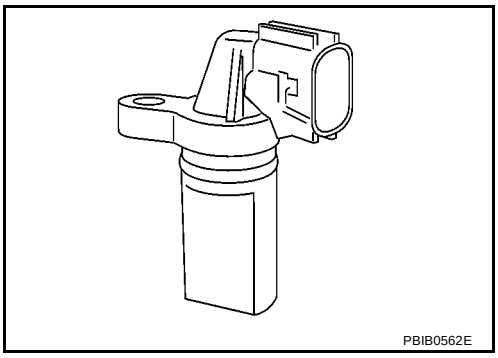

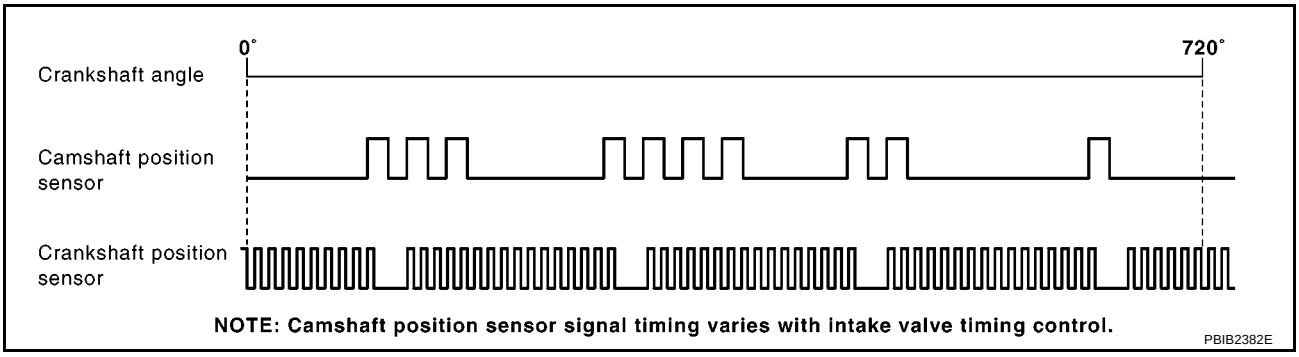

On Board Diagnosis Logic

BBS002YE

DTC No.	Trouble diagnosis name	DTC detecting condition	Possible cause
P0340 0340	Camshaft position sensor (PHASE) circuit	● The cylinder No. signal is not sent to ECM for the first few seconds during engine cranking. ● The cylinder No. signal is not set to ECM during engine running. ● The cylinder No. signal is not in the normal pattern during engine running.	● Harness or connectors (The sensor circuit is open or shorted.) ● Camshaft position sensor (PHASE) ● Camshaft (Intake) ● Starter motor (Refer to SC-45 .) ● Starting system circuit (Refer to SC-45 .) ● Dead (Weak) battery

DTC Confirmation Procedure

BBS002YF

NOTE:
If DTC Confirmation Procedure has been previously conducted, always turn ignition switch OFF and wait at least 10 seconds before conducting the next test.
TESTING CONDITION:
Before performing the following procedure, confirm that battery voltage is more than 10.5V with ignition switch ON.

WITH CONSULT-II

1. Turn ignition switch ON.

2. Select “DATA MONITOR” mode with CONSULT-II.
3. Crank engine for at least 2 seconds and run it for at least 5 seconds at idle speed.
4. If 1st trip DTC is detected, go to EC-260, "Diagnostic Procedure".
   If 1st trip DTC is not detected, go to next step.
5. Maintain engine speed at more than 800 rpm for at least 5 seconds.
6. If 1st trip DTC is detected, go to EC-260, "Diagnostic Procedure".

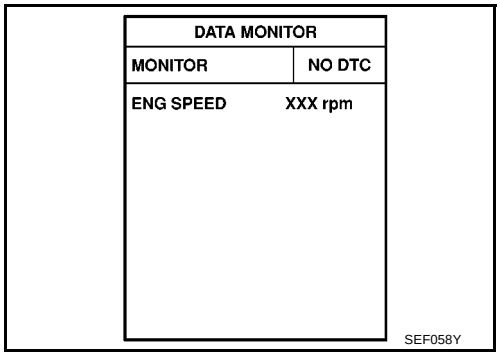

WITH GST

Follow the procedure “WITH CONSULT-II” above.

Wiring Diagram

BBS002YG

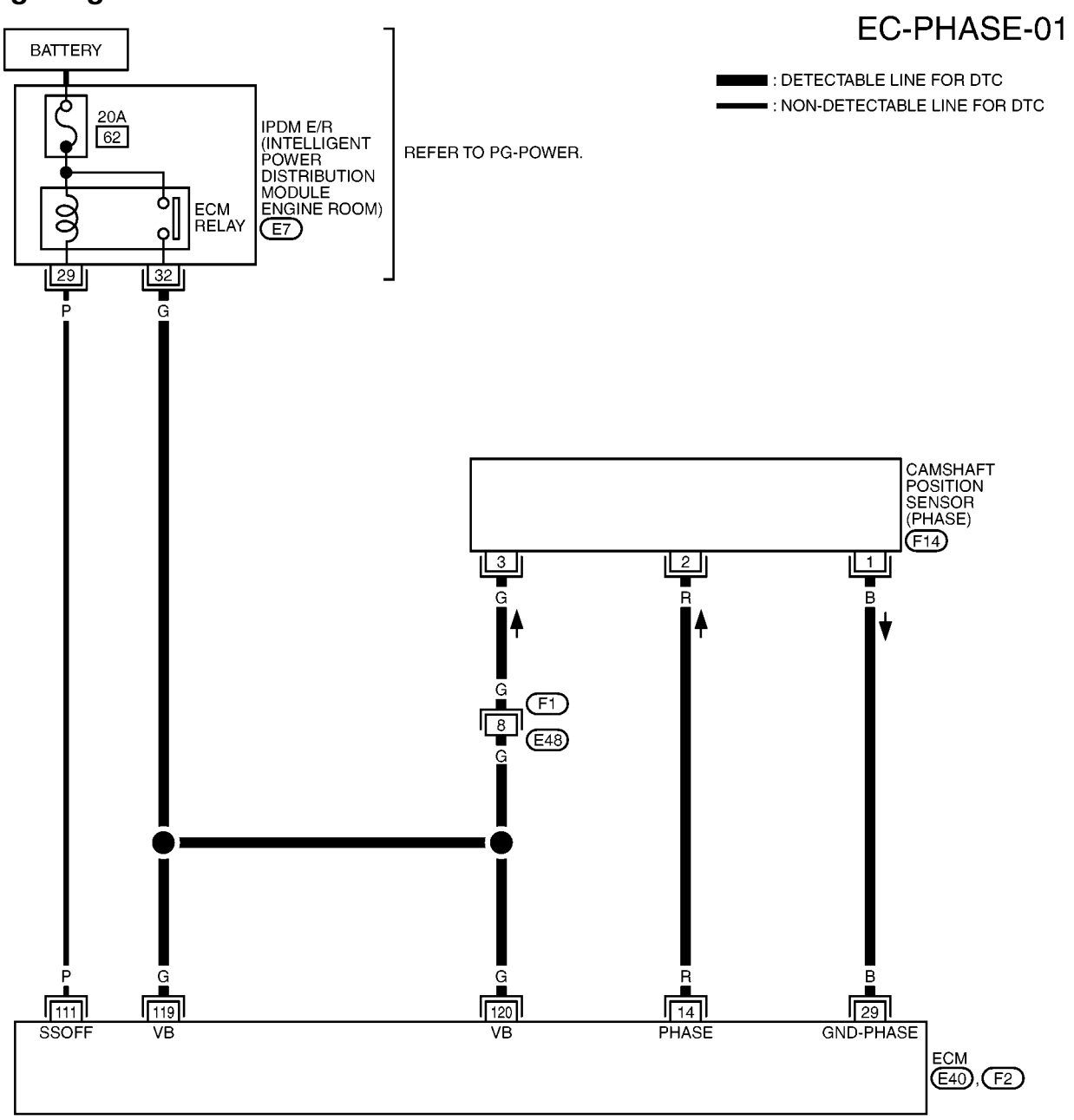

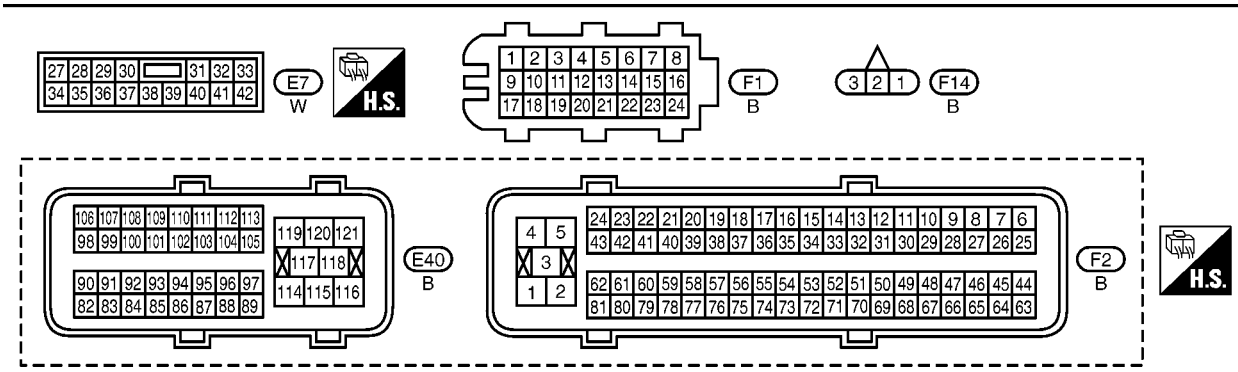

MBWA1516E

Specification data are reference values and are measured between each terminal and ground.
Pulse signal is measured by CONSULT-II.

CAUTION:
Do not use ECM ground terminals when measuring input/output voltage. Doing so may result in damage to the ECM's transistor. Use a ground other than ECM terminals, such as the ground.

TERMINAL NO.	WIRE COLOR	ITEM	CONDITION	DATA (DC Voltage)
14	R	Camshaft position sensor (PHASE)	**[Engine is running]** ● **Warm-up condition** ● Idle speed **NOTE:** The pulse cycle changes depending on rpm at idle.	1.0 - 4.0V★ 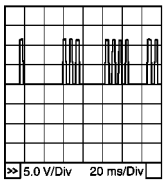 PBIB0525E
			[Engine is running] ● Engine speed: 2,000 rpm	1.0 - 4.0V★ 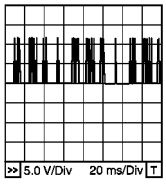 PBIB0526E
29	B	Sensor ground (Camshaft position sensor)	**[Engine is running]** ● **Warm-up condition** ● Idle speed	Approximately 0V
111	P	ECM relay (Self shut-off)	**[Engine is running]** **[Ignition switch: OFF]** ● For a few seconds after turning ignition switch OFF	0 - 1.0V
			[Ignition switch: OFF] ● More than a few seconds passed after turning ignition switch OFF	BATTERY VOLTAGE (11 - 14V)
119 120	G G	Power supply for ECM	**[Ignition switch: ON]**	BATTERY VOLTAGE (11 - 14V)

★: Average voltage for pulse signal (Actual pulse signal can be confirmed by oscilloscope.)

Diagnostic Procedure

BBS002YH

1. CHECK STARTING SYSTEM

Turn ignition switch to START position.

Does the engine turn over?

Does the starter motor operate?

Yes or No

Yes >> GO TO 2.
No >> Check starting system. (Refer to SC-45, "STARTING SYSTEM" .)

2. CHECK GROUND CONNECTIONS

1. Turn ignition switch OFF.
2. Loosen and retighten ground screws on the body.
   Refer to EC-133, "Ground Inspection" .

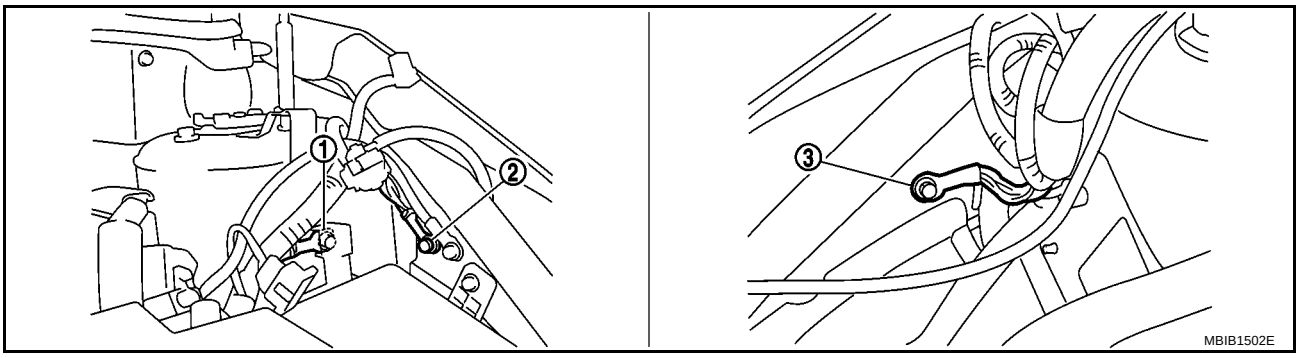

1. Body ground E44
2. Body ground E45
3. Body ground E28

OK or NG

OK >> GO TO 3.
NG >> Repair or replace ground connections.

3. CHECK CAMSHAFT POSITION (CMP) SENSOR (PHASE) POWER SUPPLY CIRCUIT

1. Disconnect camshaft position (CMP) sensor (PHASE) harness connector.
2. Turn ignition switch ON.

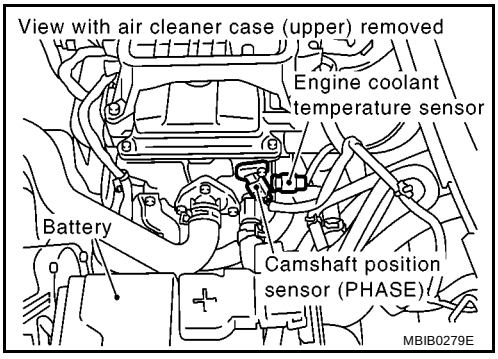

3. Check voltage between CMP sensor (PHASE) terminal 3 and ground with CONSULT-II or tester.

   Voltage: Battery voltage

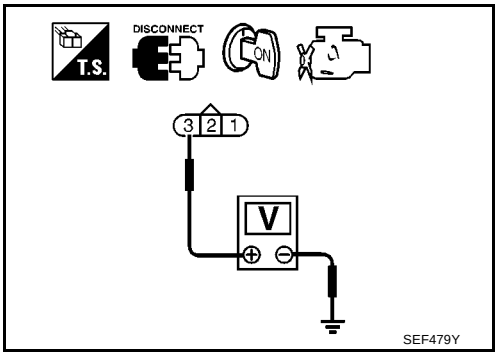

OK or NG

OK >> GO TO 5.
NG >> GO TO 4.

4. DETECT MALFUNCTIONING PART

Check the following.

- Harness connectors F1, E48
- Harness for open or short between camshaft position sensor (PHASE) and ECM
- Harness for open or short between camshaft position sensor (PHASE) and IPDM E/R

>> Repair open circuit or short to ground or short to power in harness or connectors.

5. CHECK CMP SENSOR (PHASE) GROUND CIRCUIT FOR OPEN AND SHORT

1. Turn ignition switch OFF.
2. Disconnect ECM harness connector.
3. Check harness continuity between ECM terminal 29 and CMP sensor (PHASE) terminal 1.
   Refer to Wiring Diagram.

   Continuity should exist.

4. Also check harness for short to ground and short to power.

OK or NG

OK >> GO TO 6.
NG >> Repair open circuit or short to ground or short to power in harness or connectors.

6. CHECK CMP SENSOR (PHASE) INPUT SIGNAL CIRCUIT FOR OPEN AND SHORT

1. Check harness continuity between ECM terminal 14 and CMP sensor (PHASE) terminal 2.
   Refer to Wiring Diagram.

   Continuity should exist.

2. Also check harness for short to ground and short to power.

OK or NG

OK >> GO TO 7.
NG >> Repair open circuit or short to ground or short to power in harness or connectors.

7. CHECK CAMSHAFT POSITION SENSOR (PHASE)

Refer to EC-263, "Component Inspection" .

OK or NG

OK >> GO TO 8.
NG >> Replace camshaft position sensor (PHASE).

8. CHECK CAMSHAFT (INTAKE)

Check the following.

- Accumulation of debris to the signal plate of camshaft rear end
- Chipping signal plate of camshaft rear end

OK or NG

OK >> GO TO 9.
NG >> Remove debris and clean the signal plate of camshaft rear end or replace camshaft.

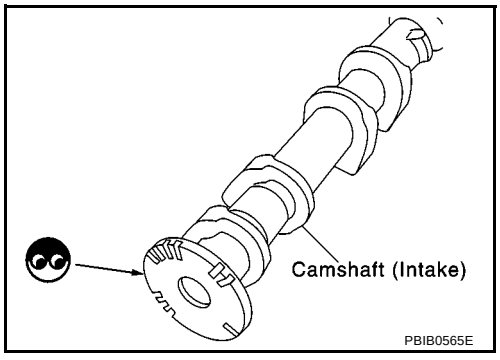

9. CHECK INTERMITTENT INCIDENT

Refer to EC-127, "TROUBLE DIAGNOSIS FOR INTERMITTENT INCIDENT" .

>> **INSPECTION END**

Component Inspection

BBS002YI

CAMSHAFT POSITION SENSOR (PHASE)

1. Loosen the fixing bolt of the sensor.
2. Disconnect camshaft position sensor (PHASE) harness connector.
3. Remove the sensor.
4. Visually check the sensor for chipping.

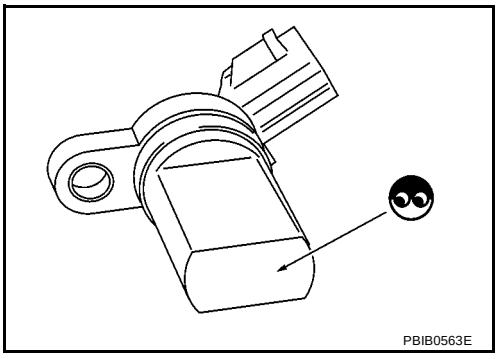

5. Check resistance as shown in the figure.

Terminal No. (Polarity)	Resistance Ω [at 25°C (77°F)]
3 (+) - 1 (-)	Except 0 or ∞
3 (+) - 2 (-)	
2 (+) - 1 (-)	

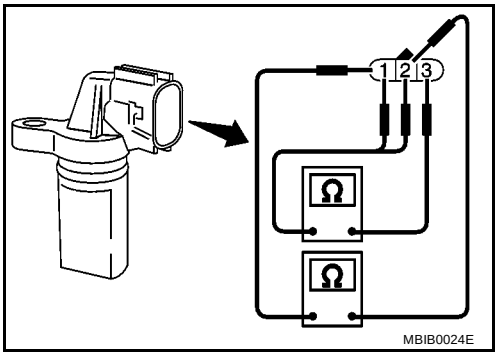

Removal and Installation

BBS002YJ

CAMSHAFT POSITION SENSOR (PHASE)

Refer to EM-38, "CAMSHAFT" .

DTC P0420 THREE WAY CATALYST FUNCTION

PFP:20905

On Board Diagnosis Logic

BBS002YK

The ECM monitors the switching frequency ratio of heated oxygen sensors 1 and 2.
A three way catalyst (Manifold) with high oxygen storage capacity will indicate a low switching frequency of heated oxygen sensor 2. As oxygen storage capacity decreases, the heated oxygen sensor 2 switching frequency will increase.
When the frequency ratio of heated oxygen sensors 1 and 2 approaches a specified limit value, the three way catalyst (Manifold) malfunction is diagnosed.

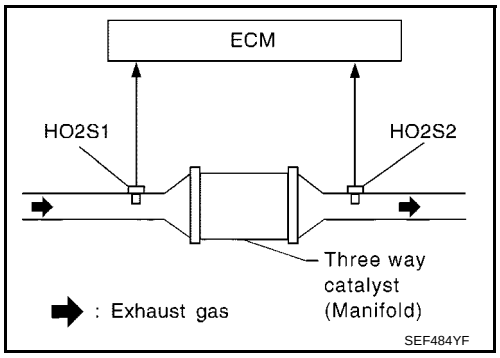

DTC No.	Trouble diagnosis name	DTC detecting condition	Possible cause
P0420 0420	Catalyst system efficiency below threshold	● Three way catalyst (Manifold) does not operate properly. ● Three way catalyst (Manifold) does not have enough oxygen storage capacity.	● Three way catalyst (Manifold) ● Exhaust tube ● Intake air leak ● Fuel injector ● Fuel injector leak ● Spark plug ● Improper ignition timing

DTC Confirmation Procedure

BBS002YL

NOTE:
If DTC Confirmation Procedure has been previously conducted, always turn ignition switch OFF and wait at least 10 seconds before conducting the next test.

WITH CONSULT-II

TESTING CONDITION:

- **Open engine hood before conducting the following procedure.**
- **Do not hold engine speed for more than the specified minutes below.**

1. Start engine and warm it up to the normal operating temperature.
2. Turn ignition switch OFF and wait at least 10 seconds.
3. Start engine and keep the engine speed between 3,500 and 4,000 rpm for at least 1 minute under no load.
4. Let engine idle for 1 minute.
5. Select “DTC & SRT CONFIRMATION” then “SRT WORK SUPPORT” mode with CONSULT-II.
6. Rev engine up to 2,000 to 3,000 rpm and hold it for 3 consecutive minutes then release the accelerator pedal completely.
   If “INCMP” of “CATALYST” changed to “COMPLT”, go to step 10
7. Wait 5 seconds at idle.

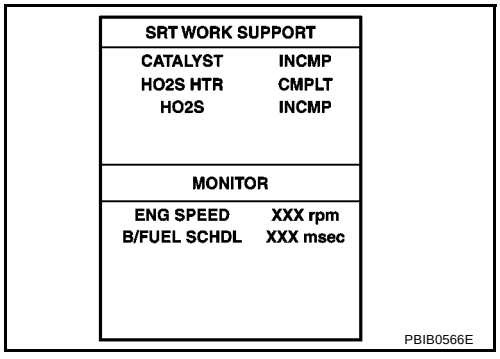

8. Rev engine up to 2,000 to 3,000 rpm and maintain it until “INCMP” of “CATALYST” changes to “CMPLT” (It will take approximately 5 minutes).
If not “CMPLT”, stop engine and cool it down to less than 70°C (158 °F) and then retest from step 1.

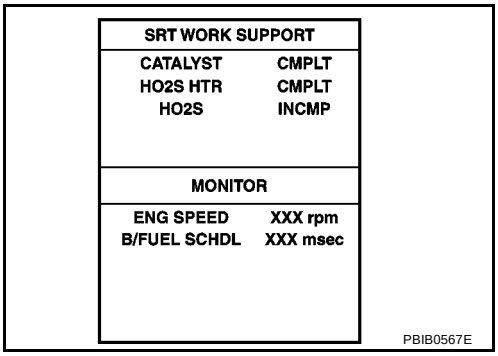

a. Turn ignition switch OFF and leave the vehicle in a cool place (soak the vehicle)
b. Turn ignition switch ON and select “COOLAN TEMP/S” in “DATA MONITOR” mode with CONSULT-II.
c. Start engine and warm it up while monitoring “COOLAN TEMP/S” indication on CONSULT-II.
d. When “COOLAN TEMP/S” indication reaches to 70°(158°F), go to step 3.

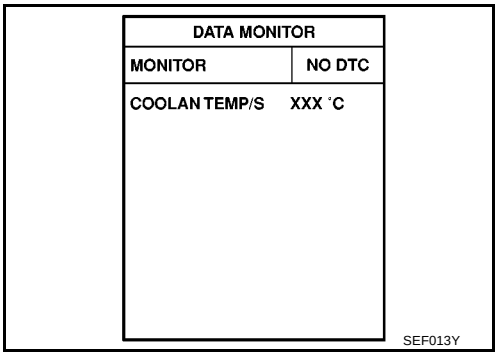

9. Select “SELF-DIAG RESULTS” mode with CONSULT-II.
10. Confirm that the 1st trip DTC is not detected.
If the 1st trip DTC is detected, go to EC-266, "Diagnostic Procedure" .

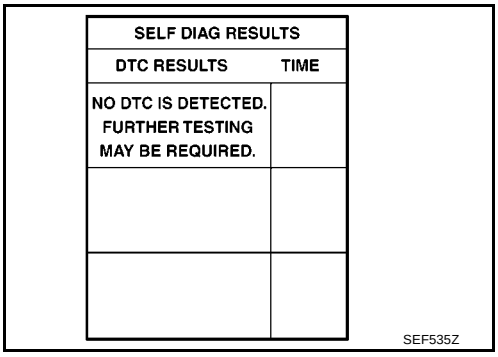

Overall Function Check

BBS002YM

Use this procedure to check the overall function of the three way catalyst (Manifold). During this check, a 1st trip DTC might not be confirmed.

WITH GST

1. Start engine and warm it up to the normal operating temperature.
2. Turn ignition switch OFF and wait at least 10 seconds.
3. Start engine and keep the engine speed between 3,500 and 4,000 rpm for at least 1 minute under no load.
4. Let engine idle for 1 minute.
5. Open engine hood.
6. Set voltmeters probes between ECM terminal 35 (HO2S1 signal) and ground, and ECM terminal 16 (HO2S2 signal) and ground.
7. Keep engine speed at 2,000 rpm constant under no load.

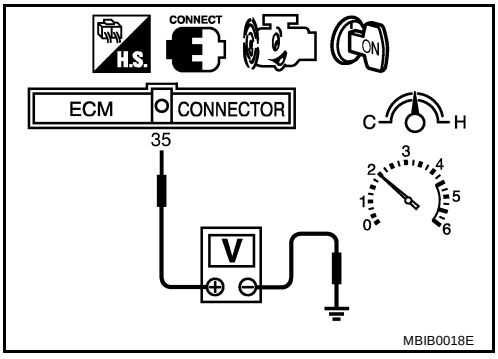

8. Make sure that the voltage switching frequency (high & low) between ECM terminal 16 and ground is very less than that of ECM terminal 35 and ground.
   Switching frequency ratio = A/B
   A: Heated oxygen sensor 2 voltage switching frequency
   B: Heated oxygen sensor 1 voltage switching frequency
   This ratio should be less than 0.75.
   If the ratio is greater than above, it means three way catalyst (manifold) does not operate properly. Go to EC-266, "Diagnostic Procedure" .

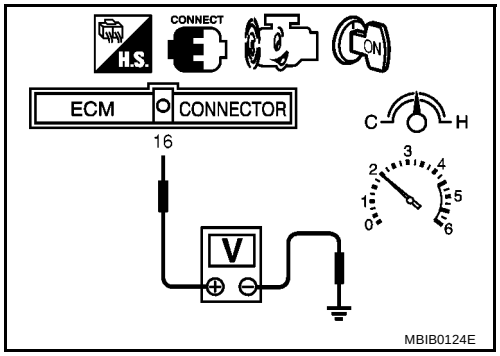

NOTE:
If the voltage at terminal 35 does not switch periodically more than 5 times within 10 seconds at step 8, perform trouble diagnosis for DTC P0133 first. (See EC-189 .)

Diagnostic Procedure

BBS002YN

1. CHECK EXHAUST SYSTEM

Visually check exhaust tubes and muffler for dent.

OK or NG

OK >> GO TO 2.
NG >> Repair or replace.

2. CHECK EXHAUST GAS LEAK

1. Start engine and run it at idle.
2. Listen for an exhaust gas leak before the three way catalyst (Manifold).

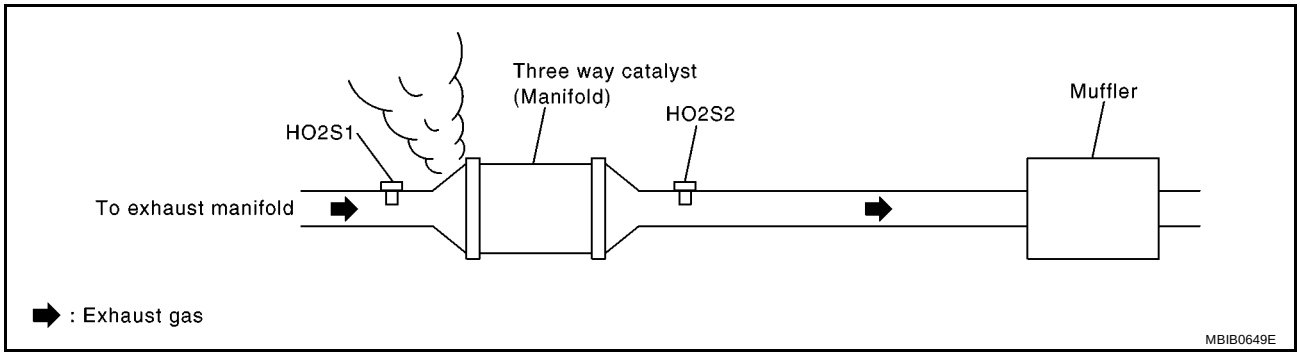

OK or NG

OK >> GO TO 3.
NG >> Repair or replace.

3. CHECK INTAKE AIR LEAK

Listen for an intake air leak after the manifold absolute pressure sensor.

OK or NG

OK >> GO TO 4.
NG >> Repair or replace.

4. CHECK FUEL INJECTORS

1. Stop engine and then turn ignition switch ON.
2. Refer to Wiring Diagram for FUEL INJECTOR, EC-422 .
3. Check voltage between ECM terminals 22, 23, 41, 42 and ground with CONSULT-II or tester.

Voltage : Battery voltage

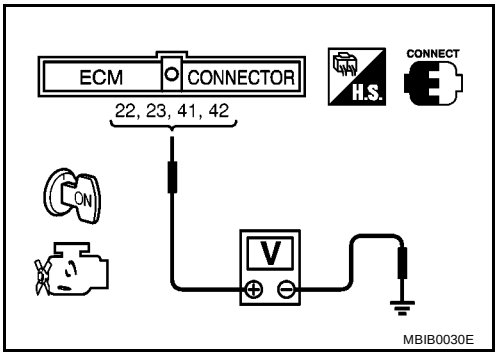

OK or NG

OK >> GO TO 5.
NG >> Perform EC-423, "Diagnostic Procedure" .

5. CHECK FUNCTION OF IGNITION COIL-I

CAUTION:
Do the following procedure in the place where ventilation is good without the combustibles.

1. Turn ignition switch OFF.
2. Remove fuel pump fuse in IPDM E/R to release fuel pressure.

   NOTE:
   Do not use CONSULT-II to release fuel pressure, or fuel pressure applies again during the following procedure.

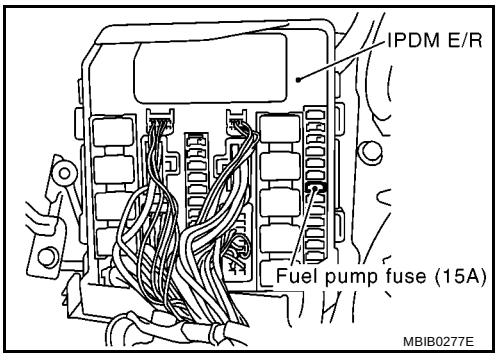

3. Start engine.
4. After engine stalls, crank it two or three times to release all fuel pressure.
5. Turn ignition switch ON.
6. Remove all ignition coil harness connectors to avoid the electrical discharge from the ignition coils.
7. Remove ignition coil and spark plug of the cylinder to be checked.
8. Crank engine for five seconds or more to remove combustion gas in the cylinder.
9. Connect spark plug and harness connector to ignition coil.
10. Fix ignition coil using a rope etc. with gap of 13 - 17 mm between the edge of the spark plug and grounded metal portion as shown in the figure.
11. Crank engine for about three seconds, and check whether spark is generated between the spark plug and the grounded metal portion.

Spark should be generated.

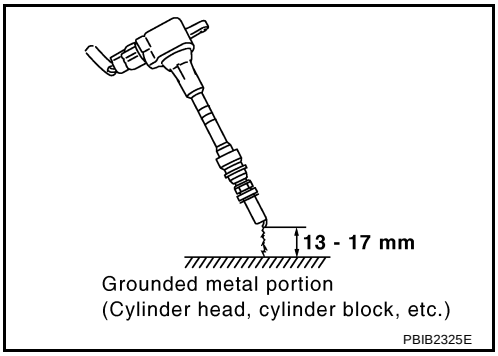

CAUTION:

- **Do not approach to the spark plug and the ignition coil within 50cm. Be careful not to get an electrical shock while checking, because the electrical discharge voltage becomes 20kV or more.**
- **It might cause to damage the ignition coil if the gap of more than 17 mm is taken.**

NOTE:
When the gap is less than 13 mm, the spark might be generated even if the coil is malfunctioning.

OK or NG

OK >> GO TO 9.
NG >> GO TO 6.

6. CHECK FUNCTION OF IGNITION COIL-II

1. Turn ignition switch OFF.
2. Disconnect spark plug and connect a known-good spark plug.
3. Crank engine for about three seconds, and recheck whether spark is generated between the spark plug and the grounded metal portion.

Spark should be generated.

OK or NG

OK >> GO TO 7.
NG >> Check ignition coil, power transistor and their circuits, Refer to EC-433, "IGNITION SIGNAL" .

7. CHECK SPARK PLUGS

Check the initial spark plug for fouling, etc.

OK or NG

OK >> Replace spark plug(s) with standard type one(s). For spark plug type, refer to MA-36, "Changing Spark Plugs" .
NG >> 1. Repair or clean spark plug.
2. GO TO 8.

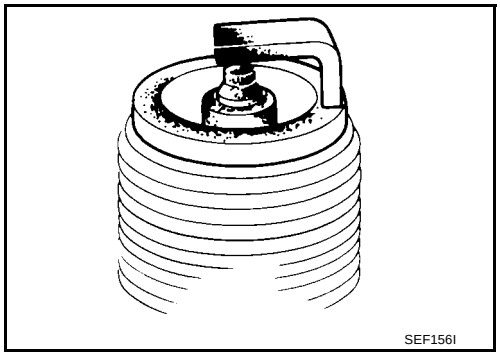

8. CHECK FUNCTION OF IGNITION COIL-III

1. Reconnect the initial spark plugs.
2. Crank engine for about three seconds, and recheck whether spark is generated between the spark plug and the grounded portion.

Spark should be generated.

OK or NG

OK >> **INSPECTION END**
NG >> Replace spark plug(s) with standard type one(s). For spark plug type, refer to MA-36, "Changing Spark Plugs" .

9. CHECK FUEL INJECTOR

1. Turn ignition switch OFF.
2. Remove fuel injector assembly.
Refer to EM-32, "FUEL INJECTOR AND FUEL TUBE" .
Keep fuel hose and all fuel injectors connected to fuel tube.
3. Reconnect all fuel injector harness connectors.
4. Disconnect all ignition coil harness connectors.
5. Turn ignition switch ON.
Make sure fuel does not drip from fuel injector.

OK or NG

OK (Does not drip.)>>GO TO 10.
NG (Drips.)>>Replace the fuel injector(s) from which fuel is dripping.

10. CHECK INTERMITTENT INCIDENT

Refer to EC-127, "TROUBLE DIAGNOSIS FOR INTERMITTENT INCIDENT" .

Trouble is fixed.>>**INSPECTION END**
Trouble is not fixed.>>Replace three way catalyst (Manifold).

DTC P0444 EVAP CANISTER PURGE VOLUME CONTROL SOLENOID VALVE

PFP:14920

Description

BBS002YO

SYSTEM DESCRIPTION

Sensor	Input Signal to ECM	ECM Function	Actuator
Crankshaft position sensor (POS) Camshaft position sensor (PHASE)	Engine speed*1	EVAP canister purge flow control	EVAP canister purge volume control solenoid valve
Manifold absolute pressure sensor	Amount of intake air		
Engine coolant temperature sensor	Engine coolant temperature		
Battery	Battery voltage*1		
Throttle position sensor	Throttle position		
Accelerator pedal position sensor	Accelerator pedal position		
Heated oxygen sensor 1	Density of oxygen in exhaust gas (Mixture ratio feedback signal)		
Wheel sensor	Vehicle speed*2		

*1: ECM determines the start signal status by the signals of engine speed and battery voltage.
*2: This signal is sent to the ECM through CAN communication line.

This system controls flow rate of fuel vapor from the EVAP canister. The opening of the vapor by-pass passage in the EVAP canister purge volume control solenoid valve changes to control the flow rate. The EVAP canister purge volume control solenoid valve repeats ON/OFF operation according to the signal sent from the ECM. The opening of the valve varies for optimum engine control. The optimum value stored in the ECM is determined by considering various engine conditions. When the engine is operating, the flow rate of fuel vapor from the EVAP canister is regulated as the air flow changes.

COMPONENT DESCRIPTION

The EVAP canister purge volume control solenoid valve uses a ON/OFF duty to control the flow rate of fuel vapor from the EVAP canister. The EVAP canister purge volume control solenoid valve is moved by ON/OFF pulses from the ECM. The longer the ON pulse, the greater the amount of fuel vapor that will flow through the valve.

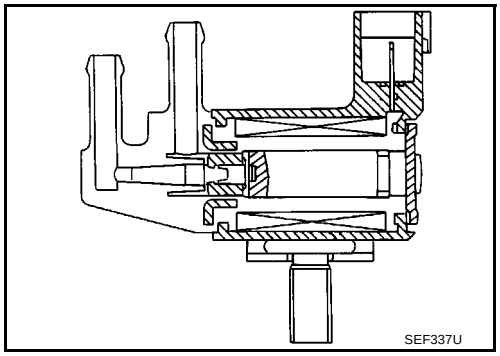

CONSULT-II Reference Value in Data Monitor Mode

BBS002YP

Specification data are reference values.

MONITOR ITEM	CONDITION		SPECIFICATION
PURG VOL C/V	● Engine: After warming up ● Shift lever: Neutral ● Air conditioner switch: OFF ● No load	Idle	0%
		2,000 rpm	20 - 30%

On Board Diagnosis Logic

BBS002YQ

DTC No.	Trouble diagnosis name	DTC detecting condition	Possible cause
P0444 0444	EVAP canister purge volume control solenoid valve circuit open	An excessively low voltage signal is sent to ECM through the valve	● Harness or connectors (The solenoid valve circuit is open or shorted.) ● EVAP canister purge volume control solenoid valve

DTC Confirmation Procedure

BBS002YR

NOTE:
If DTC Confirmation Procedure has been previously conducted, always turn ignition switch OFF and wait at least 10 seconds before conducting the next test.
TESTING CONDITION:
Before performing the following procedure, confirm battery voltage is more than 11V at idle.

WITH CONSULT-II

1. Turn ignition switch ON.
2. Select “DATA MONITOR” mode with CONSULT-II.
3. Start engine and let it idle for at least 13 seconds.
4. If 1st trip DTC is detected, go to EC-274, "Diagnostic Procedure"
.

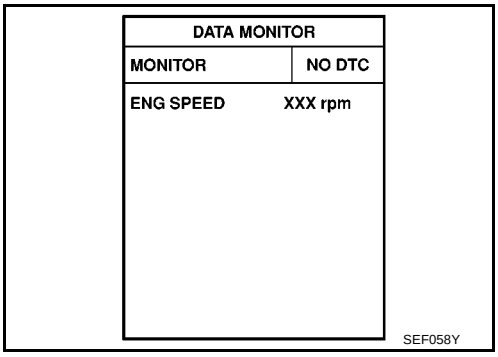

WITH GST

Follow the procedure “WITH CONSULT-II” above.

Wiring Diagram

BBS002YS

EC-PGC/V-01

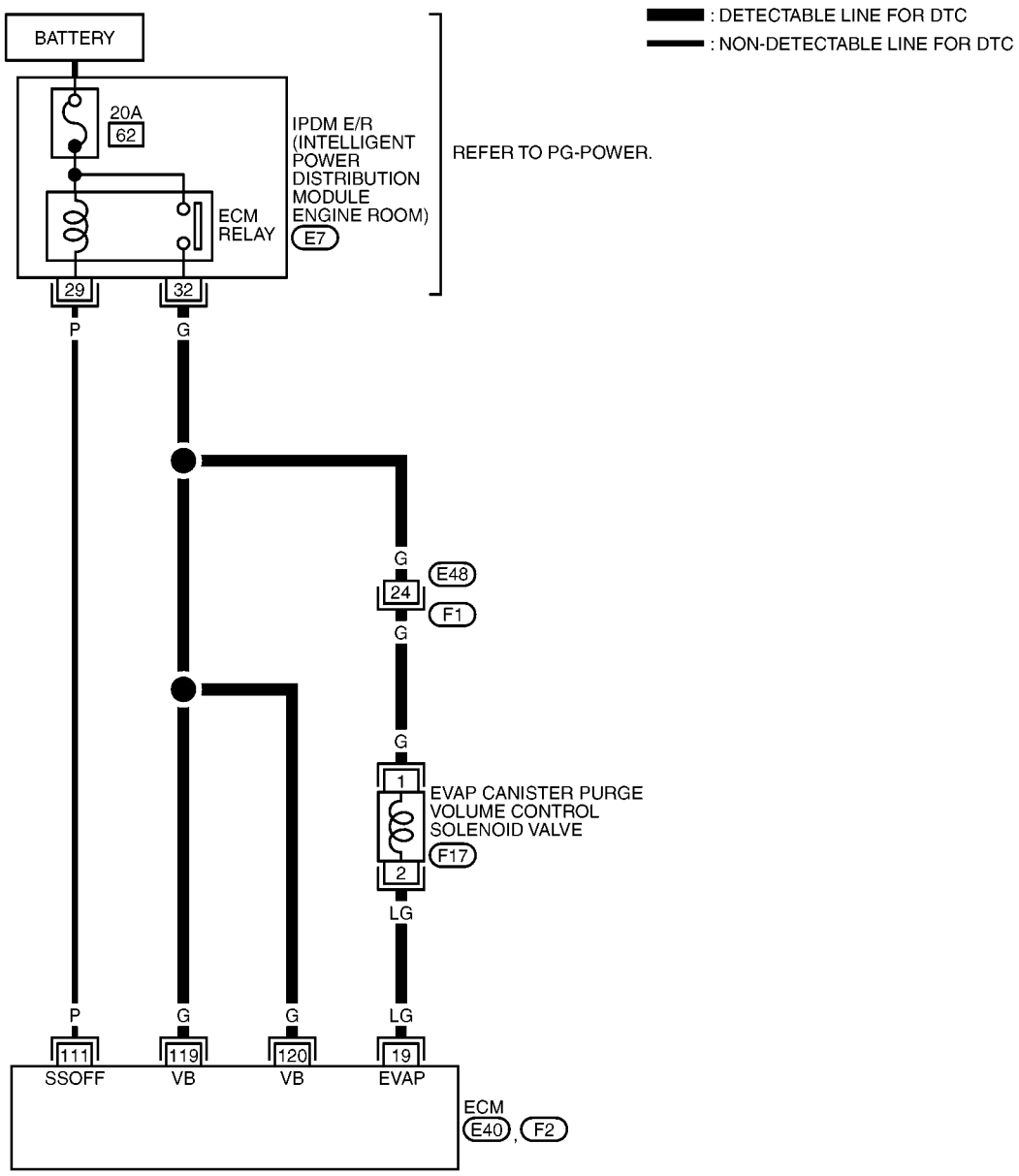

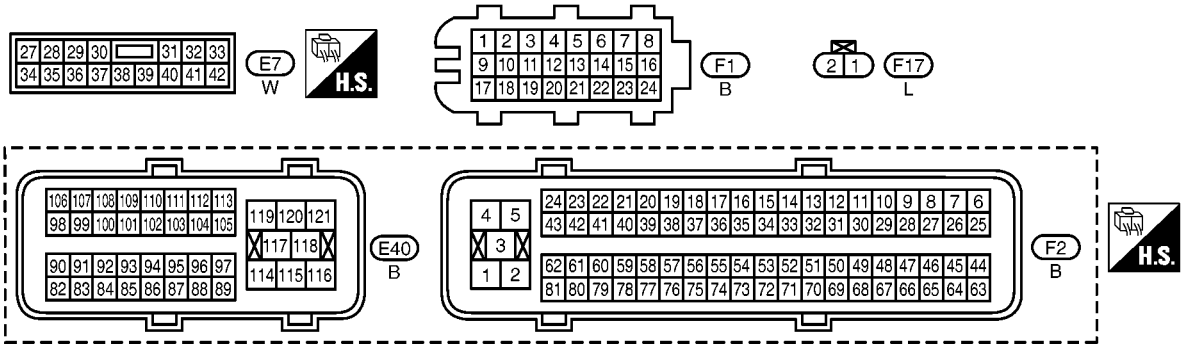

MBWA1517E

Specification data are reference values and are measured between each terminal and ground.
Pulse signal is measured by CONSULT-II.

CAUTION:
Do not use ECM ground terminals when measuring input/output voltage. Doing so may result in damage to the ECM's transistor. Use a ground other than ECM terminals, such as the ground.

TERMINAL NO.	WIRE COLOR	ITEM	CONDITION	DATA (DC Voltage)
19	LG	EVAP canister purge volume control solenoid valve	**[Engine is running]** ● Idle speed	BATTERY VOLTAGE (11 - 14V)★ 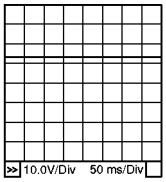 PBIB0050E
			[Engine is running] ● Engine speed: About 2,000 rpm (More than 100 seconds after starting engine)	Approximately 10V★ 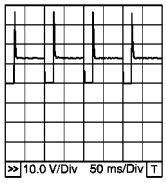 PBIB0520E
111	P	ECM relay (Self shut-off)	**[Engine is running]** **[Ignition switch: OFF]** ● For a few seconds after turning ignition switch OFF	0 - 1.0V
			[Ignition switch: OFF] ● More than a few seconds passed after turning ignition switch OFF	BATTERY VOLTAGE (11 - 14V)
119 120	G G	Power supply for ECM	**[Ignition switch: ON]**	BATTERY VOLTAGE (11 - 14V)

★: Average voltage for pulse signal (Actual pulse signal can be confirmed by oscilloscope.)

Diagnostic Procedure

BBS002YT

1. CHECK EVAP CANISTER PURGE VOLUME CONTROL SOLENOID VALVE POWER SUPPLY CIRCUIT

1. Turn ignition switch OFF.
2. Disconnect EVAP canister purge volume control solenoid valve harness connector.
3. Turn ignition switch ON.

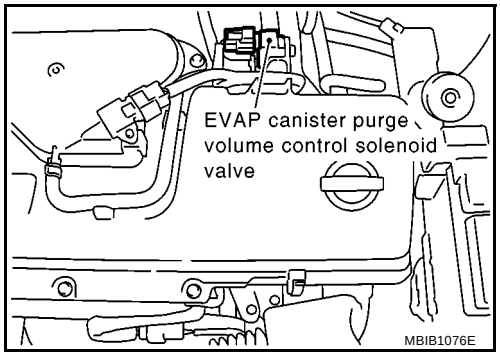

4. Check voltage between EVAP canister purge volume control solenoid valve terminal 1 and ground with CONSULT-II or tester.

Voltage: Battery voltage

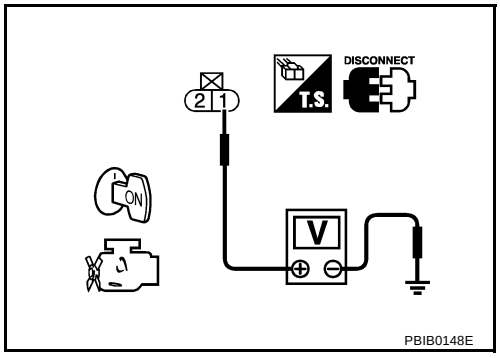

OK or NG

OK >> GO TO 3.
NG >> GO TO 2.

2. DETECT MALFUNCTIONING PART

Check the following.

- Harness connectors E48, F1
- Harness for open or short between EVAP canister purge volume control solenoid valve and IPDM E/R
- Harness for open or short between EVAP canister purge volume control solenoid valve and ECM

>> Repair harness or connectors.

3. CHECK EVAP CANISTER PURGE VOLUME CONTROL SOLENOID VALVE OUTPUT SIGNAL CIRCUIT FOR OPEN AND SHORT

1. Turn ignition switch OFF.
2. Disconnect ECM harness connector.
3. Check harness continuity between ECM terminal 19 and EVAP canister purge volume control solenoid valve terminal 2. Refer to Wiring Diagram.

Continuity should exist.

4. Also check harness for short to ground and short to power.

OK or NG

OK (With CONSULT-II)>>GO TO 4.
OK (Without CONSULT-II)>>GO TO 5.
NG >> Repair open circuit or short to ground and short to power in harness or connectors.

4. CHECK EVAP CANISTER PURGE VOLUME CONTROL SOLENOID VALVE OPERATION

With CONSULT-II

1. Reconnect all harness connectors disconnected.
2. Start engine.
3. Perform “PURG VOL CONT/V” in “ACTIVE TEST” mode with CONSULT-II. Check that engine speed varies according to the valve opening.

ACTIVE TEST	
PURG VOL CONT/V	XXX %
MONITOR	
ENG SPEED	XXX rpm
A/F ALPHA-B1	XXX %
HO2S1 MNTR (B1)	LEAN

PBIB0569E

OK or NG

OK >> GO TO 6.
NG >> GO TO 5.

5. CHECK EVAP CANISTER PURGE VOLUME CONTROL SOLENOID VALVE

Refer to EC-275, "Component Inspection" .

OK or NG

OK >> GO TO 6.
NG >> Replace EVAP canister purge volume control solenoid valve.

6. CHECK INTERMITTENT INCIDENT

Refer to EC-127, "TROUBLE DIAGNOSIS FOR INTERMITTENT INCIDENT" .

>> **INSPECTION END**

Component Inspection

BBS002YU

EVAP CANISTER PURGE VOLUME CONTROL SOLENOID VALVE

With CONSULT-II

Check air passage continuity of EVAP canister purge volume control solenoid valve under the following conditions.

Condition (PURG VOL CONT/V value)	Air passage continuity between A and B
100%	Yes
0%	No

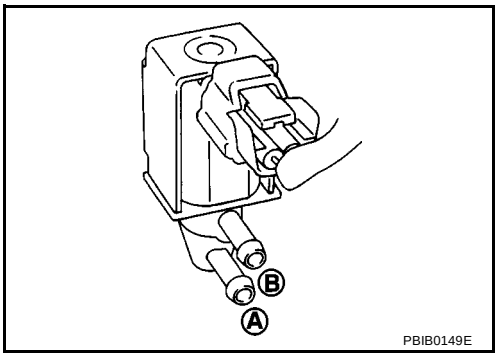

PBIB0149E

Without CONSULT-II

Check air passage continuity of EVAP canister purge volume control solenoid valve under the following conditions.

Condition	Air passage continuity between A and B
12V direct current supply between terminals 1 and 2	Yes
No supply	No

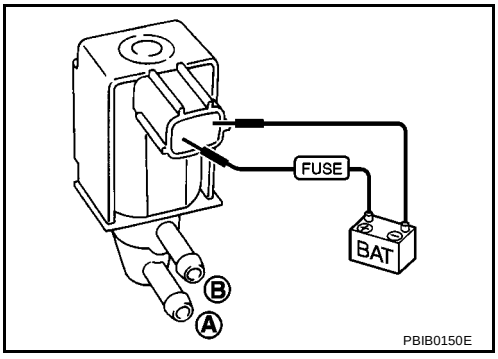

PBIB0150E

Removal and Installation

BBS002YV

EVAP CANISTER PURGE VOLUME CONTROL SOLENOID VALVE

Refer to EM-18, "AIR CLEANER AND AIR DUCT" .

DTC P0500 VSS

PFP:32702

Description

BBS002YW

NOTE:

- **If DTC P0500 is displayed with DTC U1001, first perform the trouble diagnosis for DTC U1001. Refer to EC-134, "DTC U1001 CAN COMMUNICATION LINE" .**
- **If DTC P0500 is displayed with DTC U1010, first perform the trouble diagnosis for DTC U1010. Refer to EC-137, "DTC U1010 CAN COMMUNICATION" .**

The vehicle speed signal is sent to the combination meter from the “ABS actuator and electric unit (control unit)” through CAN communication line. The combination meter then sends a signal to the ECM through CAN communication line.

On Board Diagnosis Logic

BBS002YX

DTC No.	Trouble diagnosis name	DTC detecting condition	Possible cause
P0500 0500	Vehicle speed sensor	The almost 0 km/h (0 MPH) signal from vehicle speed sensor is sent to ECM even when vehicle is being driven.	● Harness or connectors (The CAN communication line is open or shorted.) ● ABS actuator and electric unit (control unit) ● Wheel sensor ● Combination meter

DTC Confirmation Procedure

BBS002YY

CAUTION:
Always drive vehicle at a safe speed.

NOTE:
If DTC Confirmation Procedure has been previously conducted, always turn ignition switch OFF and wait at least 10 seconds before conducting the next test.

TESTING CONDITION:
Steps 1 and 2 may be conducted with the drive wheels lifted in the shop or by driving the vehicle. If a road test is expected to be easier, it is unnecessary to lift the vehicle.

WITH CONSULT-II

1. Start engine.
2. Read “VHCL SPEED SE” in “DATA MONITOR” mode with CONSULT-II. The vehicle speed on CONSULT-II should exceed 10 km/h (6 MPH) when rotating wheels with suitable gear position.
   If NG, go to EC-278, "Diagnostic Procedure" .
   If OK, go to following step.
3. Select “DATA MONITOR” mode with CONSULT-II.
4. Warm engine up to normal operating temperature.
5. Maintain the following conditions for at least 60 consecutive seconds.

ENG SPEED	2,400 - 6,000 rpm
COOLAN TEMP/S	More than 70°C (158°F)
B/FUEL SCHDL	4.3 - 31.8 msec
Shift lever	Suitable position
PW/ST SIGNAL	OFF

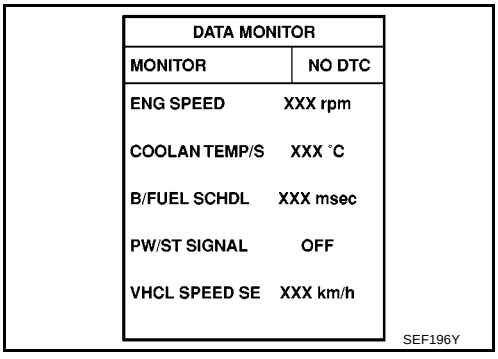

DATA MONITOR	
MONITOR	NO DTC
ENG SPEED	XXX rpm
COOLAN TEMP/S	XXX °C
B/FUEL SCHDL	XXX msec
PW/ST SIGNAL	OFF
VHCL SPEED SE	XXX km/h

SEF196Y

6. If 1st trip DTC is detected, go to EC-278, "Diagnostic Procedure" .

Overall Function Check

BBS002YZ

Use this procedure to check the overall function of the vehicle speed signal circuit. During this check, a 1st trip DTC might not be confirmed.

WITH GST

1. Lift up drive wheels.
2. Start engine.
3. Read vehicle speed signal in Service $01 with GST.
   The vehicle speed signal on GST should be able to exceed 10 km/h (6 MPH) when rotating wheels with suitable gear position.
4. If NG, go to EC-278, "Diagnostic Procedure" .

Diagnostic Procedure

BBS002Z0

1. CHECK DTC WITH ABS ACTUATOR AND ELECTRIC UNIT (CONTROL UNIT)

Refer to BRC-8, "TROUBLE DIAGNOSIS" (models without ESP) or BRC-49, "TROUBLE DIAGNOSIS" (models with ESP).

OK or NG

OK >> GO TO 2.
NG >> Repair or replace.

2. CHECK COMBINATION METER

Check combination meter function.
Refer to DI-4, "COMBINATION METERS" .

>> **INSPECTION END**

DTC P0605 ECM

PFP:23710

Component Description

BBS002Z1

The ECM consists of a microcomputer and connectors for signal input and output and for power supply. The ECM controls the engine.

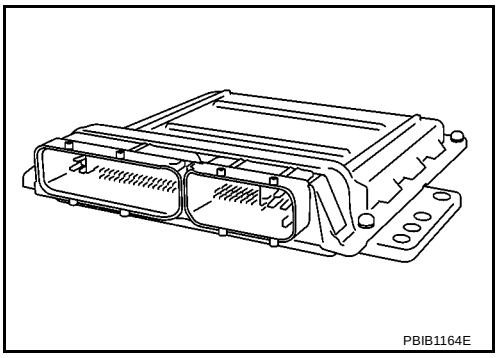

On Board Diagnosis Logic

BBS002Z2

This self-diagnosis has one or two trip detection logic.

DTC No.	Trouble diagnosis name	DTC detecting condition		Possible cause
P0605 0605	Engine control module	A)	ECM calculation function is malfunctioning.	● ECM
		B)	ECM EEP-ROM system is malfunctioning.	
		C)	ECM self shut-off function is malfunctioning.	

FAIL-SAFE MODE

ECM enters fail-safe mode when malfunction A is detected.

Detected items	Engine operation condition in fail-safe mode
Malfunction A	ECM stops the electric throttle control actuator control, throttle valve is maintained at a fixed opening (approx. 5 degrees) by the return spring.

DTC Confirmation Procedure

BBS002Z3

Perform PROCEDURE FOR MALFUNCTION A first. If the DTC cannot be confirmed, perform PROCEDURE FOR MALFUNCTION B. If there is no malfunction on PROCEDURE FOR MALFUNCTION B, perform PROCEDURE FOR MALFUNCTION C.

NOTE:
If DTC Confirmation Procedure has been previously conducted, always turn ignition switch OFF and wait at least 10 seconds before conducting the next test.

PROCEDURE FOR MALFUNCTION A

With CONSULT-II

1. Turn ignition switch ON.
2. Select “DATA MONITOR” mode with CONSULT-II.
3. If 1st trip DTC is detected, go to EC-280, "Diagnostic Procedure"
.

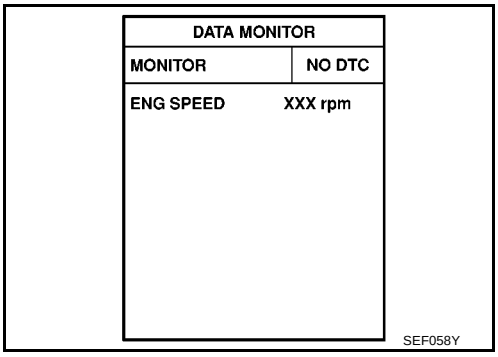

With GST

Follow the procedure “With CONSULT-II” above.

PROCEDURE FOR MALFUNCTION B

With CONSULT-II

1. Turn ignition switch ON and wait at least 1 second.
2. Select “DATA MONITOR” mode with CONSULT-II.
3. Turn ignition switch OFF, wait at least 10 seconds and then turn ON.
4. If 1st trip DTC is detected, go to EC-280, "Diagnostic Procedure" .

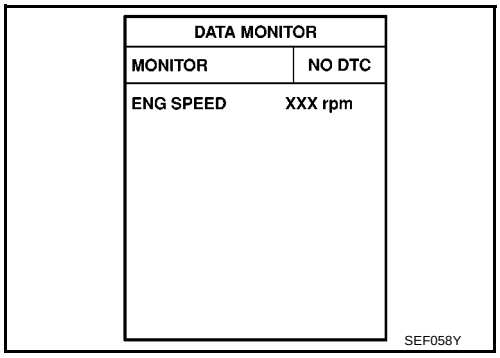

With GST

Follow the procedure “With CONSULT-II” above.

PROCEDURE FOR MALFUNCTION C

With CONSULT-II

1. Turn ignition switch ON and wait at least 1 second.
2. Select “DATA MONITOR” mode with CONSULT-II.
3. Turn ignition switch OFF, wait at least 10 seconds and then turn ON.
4. Repeat step 3 for 32 times.
5. If 1st trip DTC is detected, go to EC-280, "Diagnostic Procedure" .

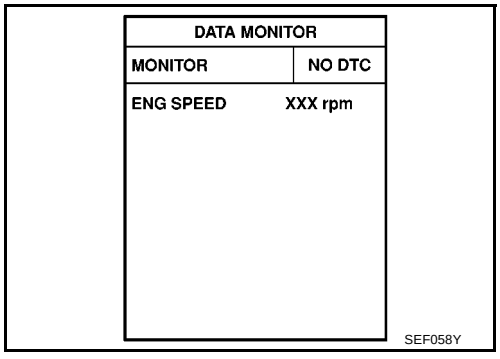

With GST

Follow the procedure “With CONSULT-II” above.

Diagnostic Procedure

BBS002Z4

1. INSPECTION START

With CONSULT-II

1. Turn ignition switch ON.
2. Select “SELF DIAG RESULTS” mode with CONSULT-II.
3. Touch “ERASE”.
4. **Perform DTC Confirmation Procedure.**
   See EC-279, "DTC Confirmation Procedure" .
5. Is the 1st trip DTC P0605 displayed again?

With GST

1. Turn ignition switch ON.
2. Select Service $04 with GST.
3. **Perform DTC Confirmation Procedure.**
   See EC-279, "DTC Confirmation Procedure" .
4. Is the 1st trip DTC P0605 displayed again?

Yes or No

Yes >> GO TO 2.
No >> **INSPECTION END**

2. REPLACE ECM

1. Replace ECM.
2. Perform initialization of NATS system and registration of all NATS ignition key IDs. Refer to BL-218, "ECM Re-communicating Function" .
3. Perform EC-69, "Accelerator Pedal Released Position Learning" .
4. Perform EC-69, "Throttle Valve Closed Position Learning" .
5. Perform EC-69, "Idle Air Volume Learning" .

>> **INSPECTION END**

DTC P1065 ECM POWER SUPPLY

PFP:23710

Component Description

BBS002Z5

Battery voltage is supplied to the ECM even when the ignition switch is turned OFF for the ECM memory function of the DTC memory, the air-fuel ratio feedback compensation value memory, the idle air volume learning value memory, etc.

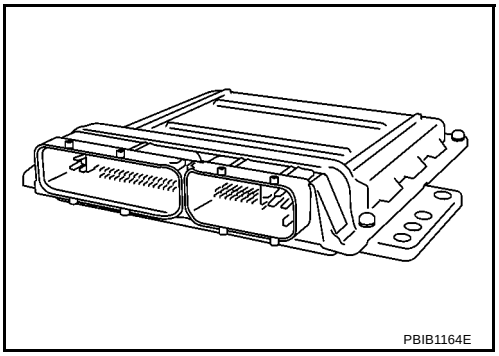

On Board Diagnosis Logic

BBS002Z6

DTC No.	Trouble diagnosis name	DTC detecting condition	Possible cause
P1065 1065	ECM power supply circuit	ECM back-up RAM system does not function properly.	● Harness or connectors [ECM power supply (back-up) circuit is open or shorted.] ● ECM

DTC Confirmation Procedure

BBS002Z7

NOTE:
If DTC Confirmation Procedure has been previously conducted, always turn ignition switch OFF and wait at least 10 seconds before conducting the next test.

WITH CONSULT-II

1. Turn ignition switch ON and wait at least 1 second.
2. Select “DATA MONITOR” mode with CONSULT-II.
3. Start engine and let it idle for 1 second.
4. Turn ignition switch OFF, wait at least 10 seconds and then turn ON.
5. Repeat steps 3 and 4 for 4 times.
6. If 1st trip DTC is detected, go to EC-284, "Diagnostic Procedure"
.

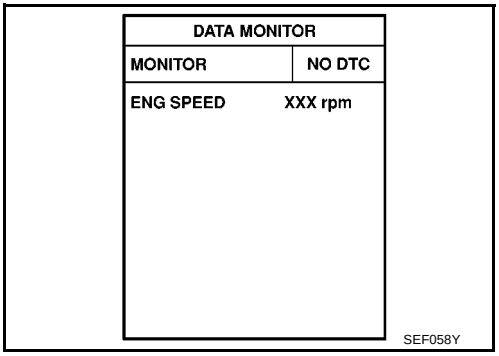

WITH GST

Follow the procedure “WITH CONSULT-II” above.

Wiring Diagram

BBS002Z8

EC-ECM/PW-01

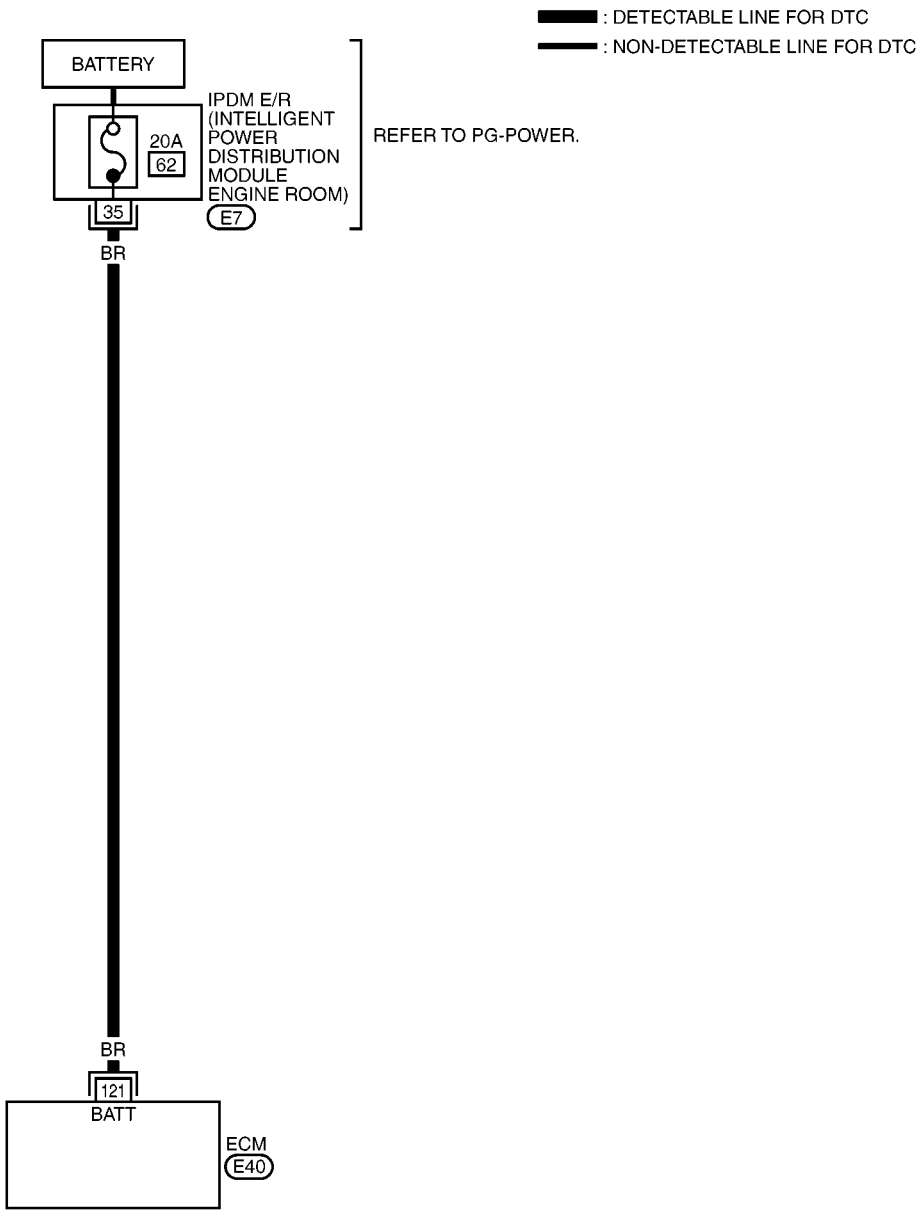

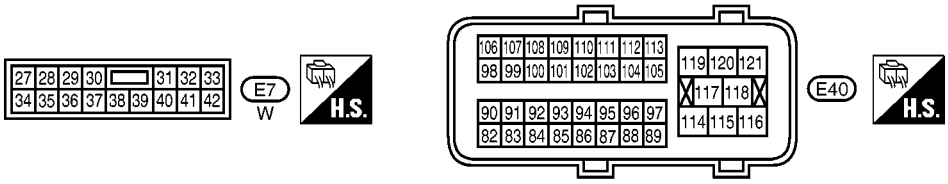

MBWA1518E

Specification data are reference values and are measured between each terminal and ground.

CAUTION:

Do not use ECM ground terminals when measuring input/output voltage. Doing so may result in damage to the ECM's transistor. Use a ground other than ECM terminals, such as the ground.

TERMINAL NO.	WIRE COLOR	ITEM	CONDITION	DATA (DC Voltage)
121	BR	Power supply for ECM (Back-up)	**[Ignition switch: OFF]**	BATTERY VOLTAGE (11 - 14V)

Diagnostic Procedure

BBS002Z9

1. CHECK ECM POWER SUPPLY

1. Turn ignition switch OFF.
2. Disconnect ECM harness connector.
3. Check voltage between ECM terminal 121 and ground with CONSULT-II or tester.

Voltage: Battery voltage

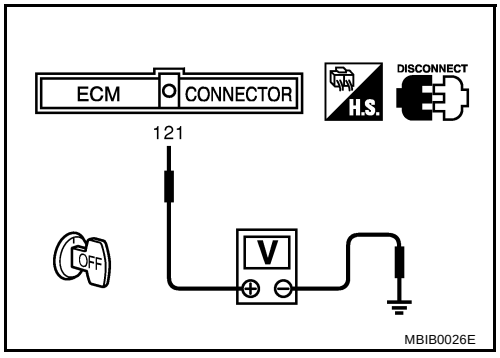

OK or NG

OK >> GO TO 3.
NG >> GO TO 2.

2. DETECT MALFUNCTIONING PART

Check the following.

- 20A fuse
- IPDM E/R harness connector E7
- Harness for open or short between ECM and IPDM E/R

>> Repair or replace harness or connectors.

3. CHECK INTERMITTENT INCIDENT

Refer to EC-127, "TROUBLE DIAGNOSIS FOR INTERMITTENT INCIDENT" .

OK or NG

OK >> GO TO 4.
NG >> Repair or replace harness or connectors.

4. PERFORM DTC CONFIRMATION PROCEDURE

With CONSULT-II

1. Turn ignition switch ON.
2. Select “SELF DIAG RESULTS” mode with CONSULT-II.
3. Touch “ERASE”.
4. **Perform DTC Confirmation Procedure.**
   See EC-282, "DTC Confirmation Procedure" .
5. Is the 1st trip DTC P1065 displayed again?

With GST

1. Turn ignition switch ON.
2. Select Service $04 with GST.
3. **Perform DTC Confirmation Procedure.**
   See EC-282, "DTC Confirmation Procedure" .
4. Is the 1st trip DTC P1065 displayed again?

Yes or No

Yes >> GO TO 5.
No >> **INSPECTION END**

5. REPLACE ECM

1. Replace ECM.
2. Perform initialization of NATS system and registration of all NATS ignition key IDs. Refer to BL-218, "ECM Re-communicating Function" .
3. Perform EC-69, "Accelerator Pedal Released Position Learning" .
4. Perform EC-69, "Throttle Valve Closed Position Learning" .
5. Perform EC-69, "Idle Air Volume Learning" .

>> **INSPECTION END**

DTC P1111 IVT CONTROL SOLENOID VALVE

PFP:23796

Component Description

BBS002ZA

Intake valve timing control solenoid valve is activated by ON/OFF pulse duty (ratio) signals from the ECM.
The intake valve timing control solenoid valve changes the oil amount and direction of flow through intake valve timing control unit or stops oil flow.
The longer pulse width advances valve angle.
The shorter pulse width retards valve angle.
When ON and OFF pulse widths become equal, the solenoid valve stops oil pressure flow to fix the intake valve angle at the control position.

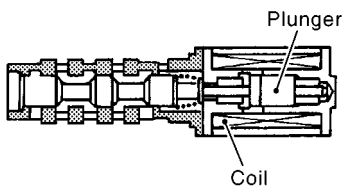

PBIB1842E

CONSULT-II Reference Value in Data Monitor Mode

BBS002ZB

Specification data are reference values.

MONITOR ITEM	CONDITION		SPECIFICATION
INT/V SOL (B1)	● Engine: After warming up ● Shift lever: Neutral ● Air conditioner switch: OFF ● No load	Idle	0% - 2%
		2,000 rpm	Approx. 0% - 50%

On Board Diagnosis Logic

BBS002ZC

DTC No.	Trouble diagnosis name	DTC detecting condition	Possible cause
P1111 1111	Intake valve timing control solenoid valve circuit	An improper voltage is sent to the ECM through intake valve timing control solenoid valve.	● Harness or connectors (Intake valve timing control solenoid valve circuit is open or shorted.) ● Intake valve timing control solenoid valve

DTC Confirmation Procedure

BBS002ZD

NOTE:
If DTC Confirmation Procedure has been previously conducted, always turn ignition switch OFF and wait at least 10 seconds before conducting the next test.

WITH CONSULT-II

1. Turn ignition switch ON.
2. Select “DATA MONITOR” mode with CONSULT-II.
3. Start engine and let it idle for 5 seconds.
4. If 1st trip DTC is detected, go to EC-289, "Diagnostic Procedure"
.

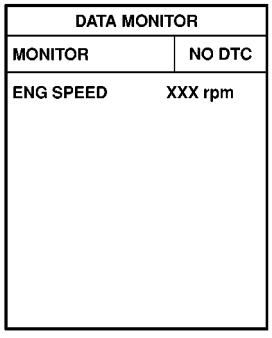

SEF058Y

WITH GST

Following the procedure “WITH CONSULT-II” above.

Wiring Diagram

BBS002ZE

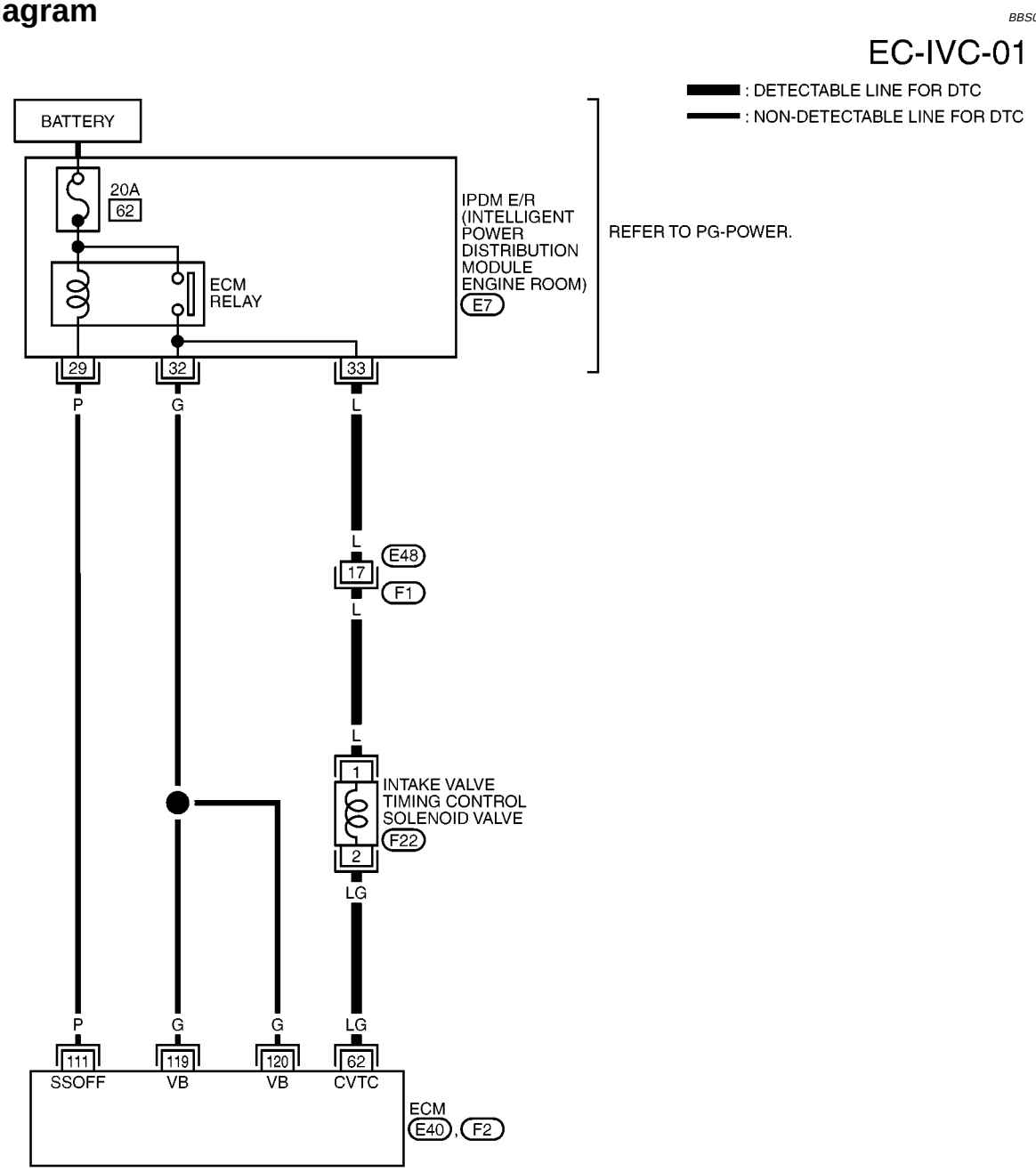

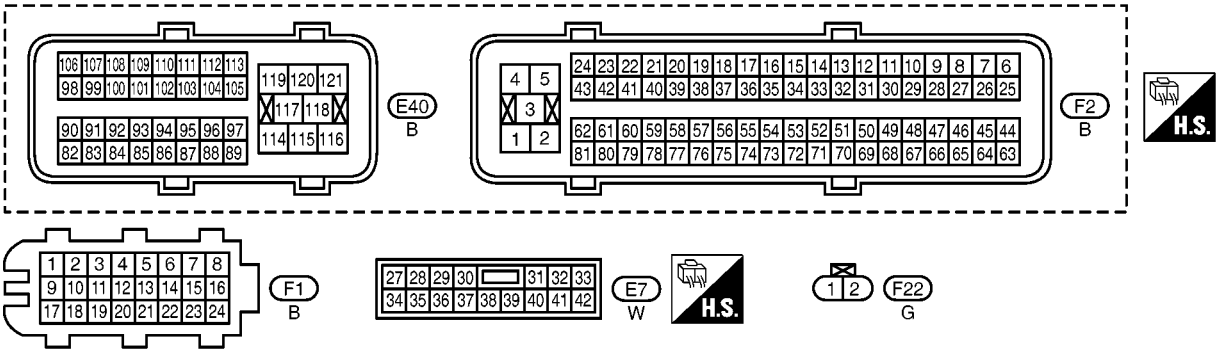

MBWA1519E

Specification data are reference values and are measured between each terminal and ground.
Pulse signal is measured by CONSULT-II.

CAUTION:

Do not use ECM ground terminals when measuring input/output voltage. Doing so may result in damage to the ECM's transistor. Use a ground other than ECM terminals, such as the ground.

TERMINAL NO.	WIRE COLOR	ITEM	CONDITION	DATA (DC Voltage)
62	LG	Intake valve timing control solenoid valve	**[Engine is running]** ● **Warm-up condition** ● Idle speed	BATTERY VOLTAGE (11 - 14V)
			[Engine is running] ● **Warm-up condition** ● Engine speed: 2,000 rpm	Approximately 4V - BATTERY VOLTAGE (11 - 14V)★ 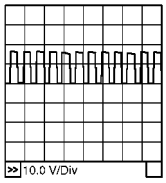 PBIB1790E
111	P	ECM relay (Self shut-off)	**[Engine is running]** **[Ignition switch: OFF]** ● For a few seconds after turning ignition switch OFF	0 - 1.0V
			[Ignition switch: OFF] ● More than a few seconds passed after turning ignition switch OFF	BATTERY VOLTAGE (11 - 14V)
119 120	G G	Power supply for ECM	**[Ignition switch: ON]**	BATTERY VOLTAGE (11 - 14V)

★: Average voltage for pulse signal (Actual pulse signal can be confirmed by oscilloscope.)

Diagnostic Procedure

BBS002ZF

1. CHECK INTAKE VALVE TIMING CONTROL SOLENOID VALVE POWER SUPPLY CIRCUIT

1. Turn ignition switch OFF.
2. Disconnect intake valve timing control solenoid valve harness connector.
3. Turn ignition switch ON.

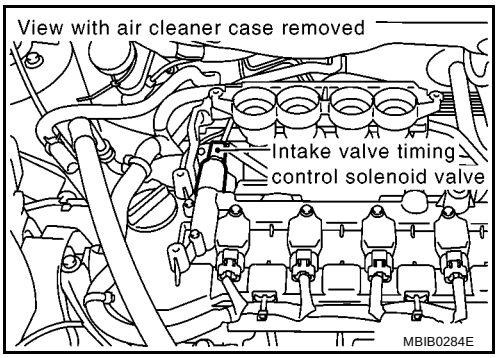

4. Check voltage between intake valve timing control solenoid valve terminal 1 and ground with CONSULT-II or tester.

Voltage: Battery voltage

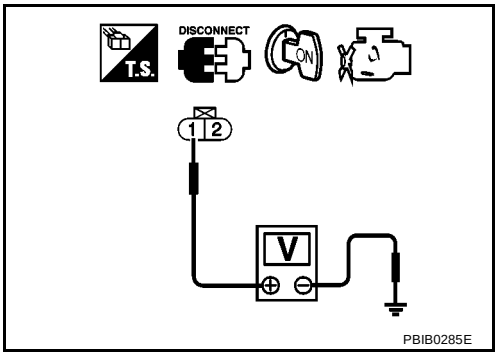

OK or NG

OK >> GO TO 3.
NG >> GO TO 2.

2. DETECT MALFUNCTION PART

Check the following.

- Harness connectors E48, F1
- Harness for open or short between intake valve timing control solenoid valve and IPDM E/R

>> Repair or replace harness or connectors.

3. CHECK INTAKE VALVE TIMING CONTROL SOLENOID VALVE OUTPUT SIGNAL CIRCUIT FOR OPEN AND SHORT

1. Turn ignition switch OFF.
2. Disconnect ECM harness connector.
3. Check harness continuity between ECM terminal 62 and intake valve timing control solenoid valve terminal 2. Refer to Wiring Diagram.

Continuity should exist.

4. Also check harness for short to ground and short to power.

OK or NG

OK >> GO TO 4.
NG >> Repair open circuit or short to ground or short to power in harness or connectors.

4. CHECK INTAKE VALVE TIMING CONTROL SOLENOID VALVE

Refer to EC-290, "Component Inspection" .

OK or NG

OK >> GO TO 5.
NG >> Replace intake valve timing control solenoid valve.

5. CHECK INTERMITTENT INCIDENT

Refer to EC-127, "TROUBLE DIAGNOSIS FOR INTERMITTENT INCIDENT" .

>> **INSPECTION END**

Component Inspection

BBS002ZG

INTAKE VALVE TIMING CONTROL SOLENOID VALVE

1. Disconnect intake valve timing control solenoid valve harness connector.
2. Check resistance between intake valve timing control solenoid valve as follows.

Terminal	Resistance
1 and 2	6.7 - 7.7Ω at 20°C (68°F)
1 or 2 and ground	∞Ω (Continuity should not exist.)

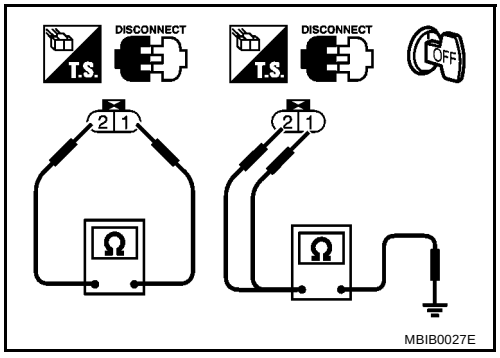

If NG, replace intake valve timing control solenoid valve.
If OK, go to next step.

3. Remove intake valve timing control solenoid valve.
4. Provide 12V DC between intake valve timing control solenoid valve terminals and then interrupt it. Make sure that the plunger moves as shown in the figure.

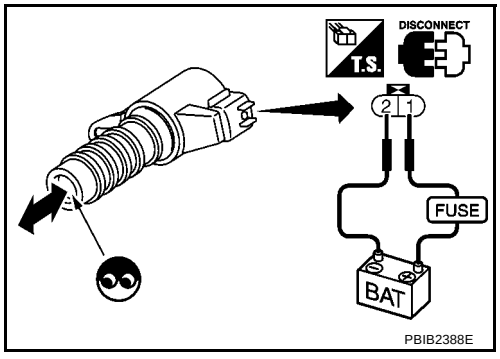

CAUTION:
Do not apply 12V DC continuously for 5 seconds or more. Doing so may result in damage to the coil in intake valve timing control solenoid valve.
If NG, replace intake valve timing control solenoid valve.

NOTE:
Always replace O-ring when intake valve timing control solenoid valve is removed.

Removal and Installation

BBS002ZH

INTAKE VALVE TIMING CONTROL SOLENOID VALVE

Refer to EM-35, "ROCKER COVER" .

DTC P1121 ELECTRIC THROTTLE CONTROL ACTUATOR

PFP:16119

Component Description

BBS002ZI

Electric throttle control actuator consists of throttle control motor, throttle position sensor, etc.
The throttle control motor is operated by the ECM and it opens and closes the throttle valve.
The throttle position sensor detects the throttle valve position, and the opening and closing speed of the throttle valve and feeds the voltage signals to the ECM. The ECM judges the current opening angle of the throttle valve from these signals and the ECM controls the throttle control motor to make the throttle valve opening angle properly in response to driving condition.

On Board Diagnosis Logic

BBS002ZJ

This self-diagnosis has the one trip detection logic.

DTC No.	Trouble diagnosis name	DTC detecting condition		Possible cause
P1121 1121	Electric throttle control actuator	A)	Electric throttle control actuator does not function properly due to the return spring malfunction.	● Electric throttle control actuator
		B)	Throttle valve opening angle in fail-safe mode is not in specified range.	
		C)	ECM detect the throttle valve is stuck open.	

FAIL-SAFE MODE

When the malfunction is detected, the ECM enters fail-safe mode and the MI lights up.

Detected items	Engine operating condition in fail-safe mode
Malfunction A	The ECM controls the electric throttle actuator by regulating the throttle opening around the idle position. The engine speed will not rise more than 2,000 rpm.
Malfunction B	ECM controls the electric throttle control actuator by regulating the throttle opening to 20 degrees or less.
Malfunction C	While the vehicle is driving, it slows down gradually by fuel cut. After the vehicle stops, the engine stalls. The engine can restart in Neutral position, and engine speed will not exceed 1,000 rpm or more.

DTC Confirmation Procedure

BBS002ZK

NOTE:

- **Perform PROCEDURE FOR MALFUNCTION A AND B first. If the DTC cannot be confirmed, perform PROCEDURE FOR MALFUNCTION C.**
- If DTC Confirmation Procedure has been previously conducted, always turn ignition switch OFF and wait at least 10 seconds before conducting the next test.

PROCEDURE FOR MALFUNCTION A AND B

With CONSULT-II

1. Turn ignition witch ON and wait at least 1 second.
2. Select “DATA MONITOR” mode with CONSULT-II.
3. Set shift lever to 1st position and wait at least 2 seconds.
4. Set shift lever to Neutral position.
5. Turn ignition switch OFF and wait at least 10 seconds.
6. Turn ignition switch ON and wait at least 1 second.
7. Set shift lever to 1st position and wait at least 2 seconds.
8. Set shift lever to Neutral position.
9. Turn ignition switch OFF, wait at least 10 seconds and then turn ON.
10. If DTC is detected, go to EC-292, "Diagnostic Procedure" .

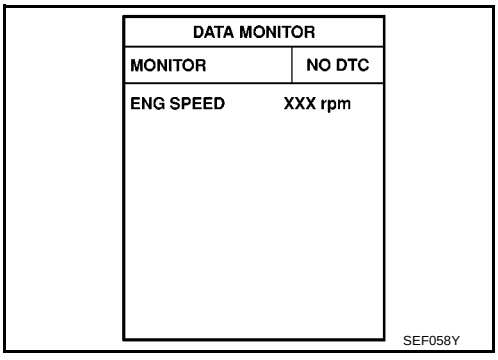

With GST

Follow the procedure “With CONSULT-II” above.

PROCEDURE FOR MALFUNCTION C

With CONSULT-II

1. Turn ignition switch ON and wait at least 1 second.
2. Select “DATA MONITOR” mode with CONSULT-II.
3. Set shift lever to 1st position and wait at least 2 seconds.
4. Set shift lever to Neutral position.
5. Start engine and let it idle for 3 seconds.
6. If DTC is detected, go to EC-292, "Diagnostic Procedure" .

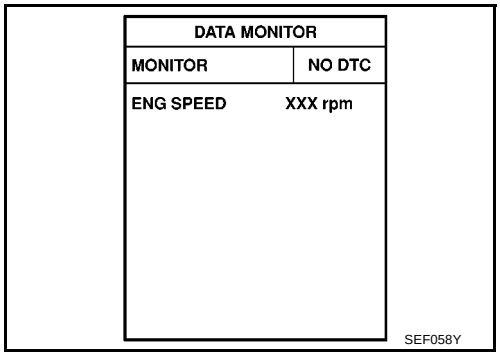

With GST

Follow the procedure “With CONSULT-II” above.

Diagnostic Procedure

BBS002ZL

1. CHECK ELECTRIC THROTTLE CONTROL ACTUATOR VISUALLY

1. Remove the intake air duct.
2. Check if a foreign matter is caught between the throttle valve and the housing.

OK or NG

OK >> GO TO 2.
NG >> Remove the foreign matter and clean the electric throttle control actuator inside.

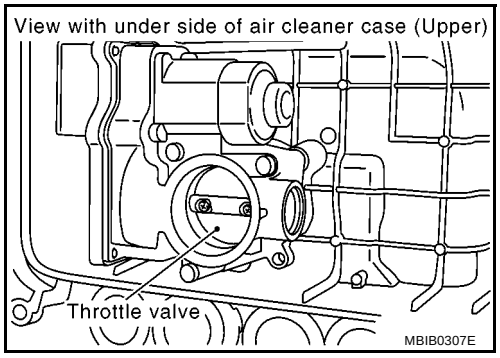

2. REPLACE ELECTRIC THROTTLE CONTROL ACTUATOR

1. Replace the electric throttle control actuator.
2. Perform EC-69, "Throttle Valve Closed Position Learning" .
3. Perform EC-69, "Idle Air Volume Learning" .

>> **INSPECTION END**

DTC P1122 ELECTRIC THROTTLE CONTROL FUNCTION

PFP:16119

Description

BBS002ZM

NOTE:
If DTC P1122 is displayed with DTC P1121 or P1126, first perform the trouble diagnosis for DTC P1121 or P1126. Refer to EC-291 or EC-299 .
Electric throttle control actuator consists of throttle control motor, throttle position sensor, etc.
The throttle control motor is operated by the ECM and it opens and closes the throttle valve.
The current opening angle of the throttle valve is detected by the throttle position sensor and it provides feedback to the ECM to control the throttle control motor to make the throttle valve opening angle properly in response to driving condition.

On Board Diagnosis Logic

BBS002ZN

This self-diagnosis has the one trip detection logic.

DTC No.	Trouble diagnosis name	DTC detecting condition	Possible cause
P1122 1122	Electric throttle control performance	Electric throttle control function does not operate properly.	● Harness or connectors (Throttle control motor circuit is open or shorted.) ● Electric throttle control actuator

FAIL-SAFE MODE

When the malfunction is detected, the ECM enters fail-safe mode and the MI lights up.

Engine operating condition in fail-safe mode
ECM stops the electric throttle control actuator control, throttle valve is maintained at a fixed opening (approx. 5 degrees) by the return spring.

DTC Confirmation Procedure

BBS002ZO

NOTE:
If DTC Confirmation Procedure has been previously conducted, always turn ignition switch OFF and wait at least 10 seconds before conducting the next test.
TESTING CONDITION:
Before performing the following procedure, confirm that battery voltage is more than 11V when engine is running.

WITH CONSULT-II

1. Turn ignition switch ON and wait at least 2 seconds.
2. Select “DATA MONITOR” mode with CONSULT-II.
3. Start engine and let it idle for 5 seconds.
4. If DTC is detected, go to EC-295, "Diagnostic Procedure" .

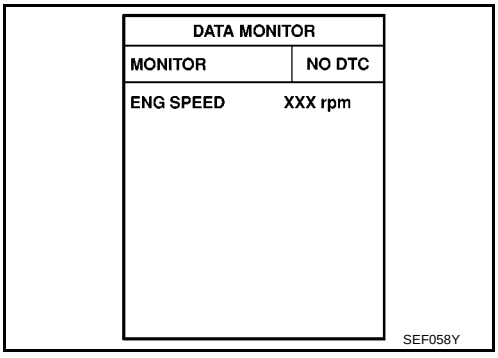

WITH GST

Follow the procedure “WITH CONSULT-II” above.

Wiring Diagram

BBS002ZP

EC-ETC1-01

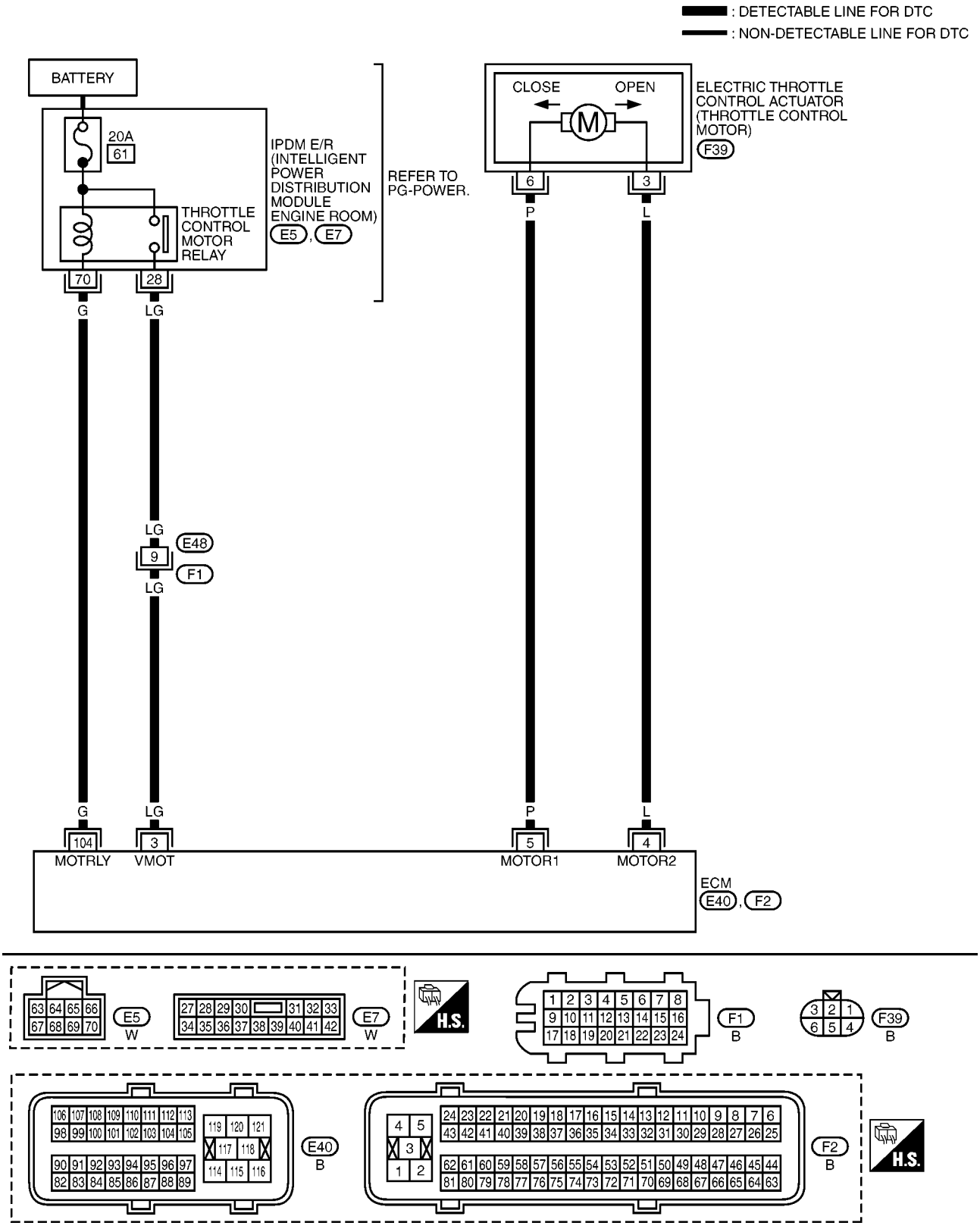

MBWA1520E

Specification data are reference values and are measured between each terminal and ground.
Pulse signal is measured by CONSULT-II.

CAUTION:
Do not use ECM ground terminals when measuring input/output voltage. Doing so may result in damage to the ECM's transistor. Use a ground other than ECM terminals, such as the ground.

TERMINAL NO.	WIRE COLOR	ITEM	CONDITION	DATA (DC Voltage)
3	LG	Throttle control motor relay power supply	**[Ignition switch: ON]**	BATTERY VOLTAGE (11 - 14V)
4	L	Throttle control motor (Close)	**[Ignition switch: ON]** ● **Engine stopped** ● Shift lever position: 1st ● Accelerator pedal: Fully released	0 - 14V★ 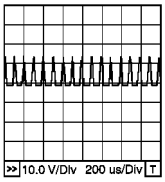 PBIB0534E
5	P	Throttle control motor (Open)	**[Ignition switch: ON]** ● **Engine stopped** ● Shift lever position: 1st ● Accelerator pedal: Fully depressed	0 - 14V★ 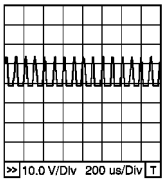 PBIB0533E
104	G	Throttle control motor relay	**[Ignition switch: OFF]**	BATTERY VOLTAGE (11 - 14V)
			[Ignition switch: ON]	0 - 1.0V

★: Average voltage for pulse signal (Actual pulse signal can be confirmed by oscilloscope.)

Diagnostic Procedure

BBS002ZQ

1. CHECK GROUND CONNECTIONS

1. Turn ignition switch OFF.
2. Loosen and retighten ground screws on the body.
   Refer to EC-133, "Ground Inspection" .

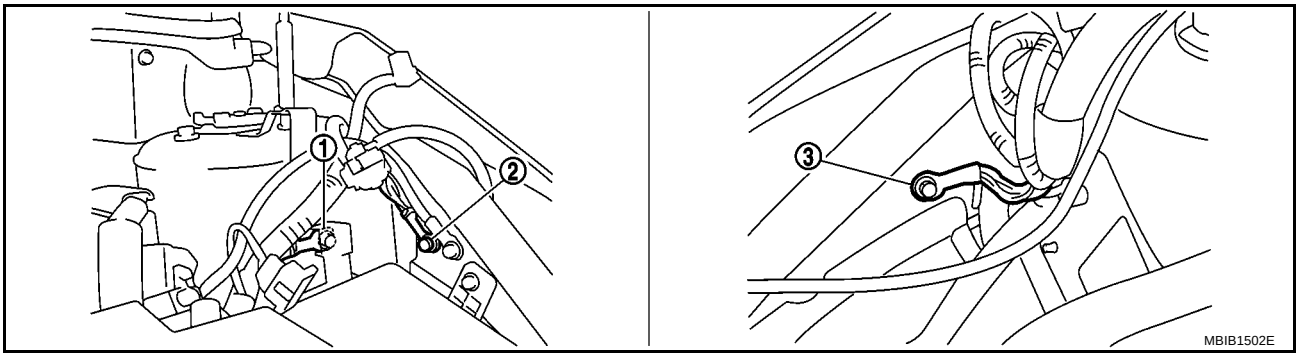

1. Body ground E44
2. Body ground E45
3. Body ground E28

OK or NG

OK >> GO TO 2.
NG >> Repair or replace ground connections.

2. CHECK THROTTLE CONTROL MOTOR RELAY SIGNAL CIRCUIT-I

Check voltage between ECM terminal 3 and ground under the following conditions with CONSULT-II or tester.

Ignition switch	Voltage
OFF	Approximately 0V
ON	Battery voltage (11 - 14V)

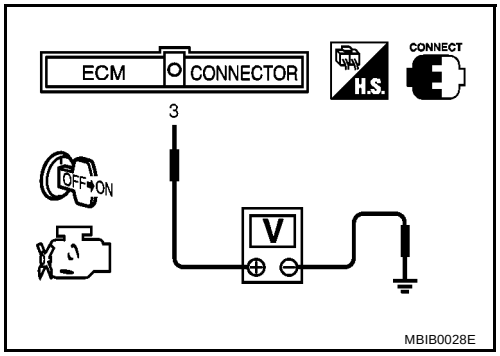

OK or NG

OK >> GO TO 9.
NG >> GO TO 3.

3. CHECK THROTTLE CONTROL MOTOR RELAY POWER SUPPLY CIRCUIT-I

1. Turn ignition switch OFF.
2. Check voltage between ECM terminal 104 and ground with CONSULT-II or tester.

Voltage: Battery voltage

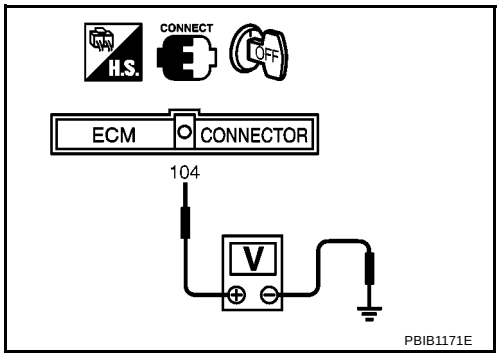

OK or NG

OK >> GO TO 6.
NG >> GO TO 4.

4. CHECK THROTTLE CONTROL MOTOR RELAY POWER SUPPLY CIRCUIT-II

1. Disconnect ECM harness connector.
2. Disconnect IPDM E/R harness connector E5.
3. Check continuity between ECM terminal 104 and IPDM E/R terminal 70.
   Refer to Wiring Diagram.

Continuity should exist.

4. Also check harness for short to ground and short to power.

OK or NG

OK >> GO TO 5.
NG >> Repair open circuit or short to ground or short to power in harness or connectors.

5. CHECK FUSE

1. Disconnect 20A fuse.
2. Check 20A fuse for blown.

OK or NG

OK >> GO TO 8.
NG >> Replace 20A fuse.

6. CHECK THROTTLE CONTROL MOTOR RELAY INPUT SIGNAL CIRCUIT-II

1. Disconnect ECM harness connector.
2. Disconnect IPDM E/R harness connector E7.
3. Check harness continuity between ECM terminal 3 and IPDM E/R terminal 28.
   Refer to Wiring Diagram.

   Continuity should exist.

4. Also check harness for short to ground and short to power.

OK or NG

OK >> GO TO 8.
NG >> GO TO 7.

7. DETECT MALFUNCTIONING PART

Check the following.

- Harness connectors E48, F1
- Harness for open or short between ECM and IPDM E/R

>> Repair open circuit or short to ground or short to power in harness or connectors.

8. CHECK INTERMITTENT INCIDENT

Refer to EC-127, "TROUBLE DIAGNOSIS FOR INTERMITTENT INCIDENT" .

OK or NG

OK >> Replace IPDM E/R. Refer to PG-18, "IPDM E/R (INTELLIGENT POWER DISTRIBUTION MODULE ENGINE ROOM)" .
NG >> Repair or replace harness or connectors.

9. CHECK THROTTLE CONTROL MOTOR OUTPUT SIGNAL CIRCUIT FOR OPEN OR SHORT

1. Turn ignition switch OFF.
2. Disconnect electric throttle control actuator harness connector.
3. Disconnect ECM harness connector.
4. Check harness continuity between the following terminals.
   Refer to Wiring Diagram.

Electric throttle control actuator terminal	ECM terminal	Continuity
3	5	Should not exist
	4	Should exist
6	5	Should exist
	4	Should not exist

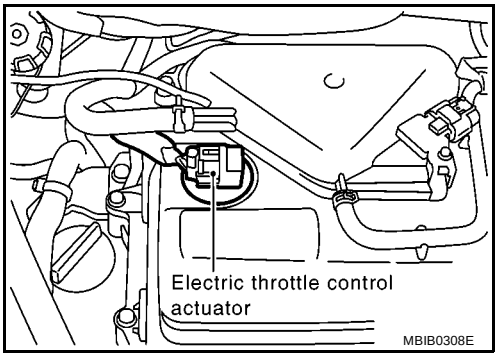

5. Also check harness for short to ground and short to power.

OK or NG

OK >> GO TO 10.
NG >> Repair or replace.

10. CHECK ELECTRIC THROTTLE CONTROL ACTUATOR VISUALLY

1. Remove the intake air duct.
2. Check if foreign matter is caught between the throttle valve and the housing.

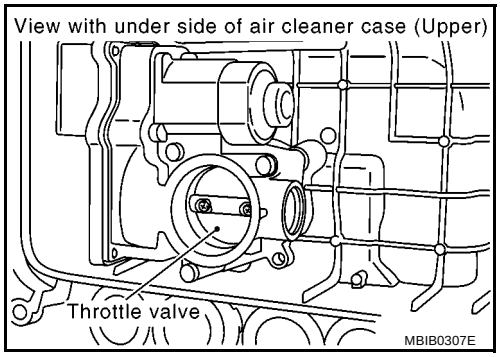

OK or NG

OK >> GO TO 11.
NG >> Remove the foreign matter and clean the electric throttle control actuator inside.

11. CHECK THROTTLE CONTROL MOTOR

Refer to EC-298, "Component Inspection" .

OK or NG

OK >> GO TO 12.
NG >> GO TO 13.

12. CHECK INTERMITTENT INCIDENT

Refer to EC-127, "TROUBLE DIAGNOSIS FOR INTERMITTENT INCIDENT" .

OK or NG

OK >> GO TO 13.
NG >> Repair or replace harness or connectors.

13. REPLACE ELECTRIC THROTTLE CONTROL ACTUATOR

1. Replace the electric throttle control actuator.
2. Perform EC-69, "Throttle Valve Closed Position Learning" .
3. Perform EC-69, "Idle Air Volume Learning" .

>> **INSPECTION END**

Component Inspection

BBS002ZR

THROTTLE CONTROL MOTOR

1. Disconnect electric throttle control actuator harness connector.
2. Check resistance between terminals 3 and 6.

Resistance: Approximately 1 - 15 Ω [at 25 °C (77°F)]

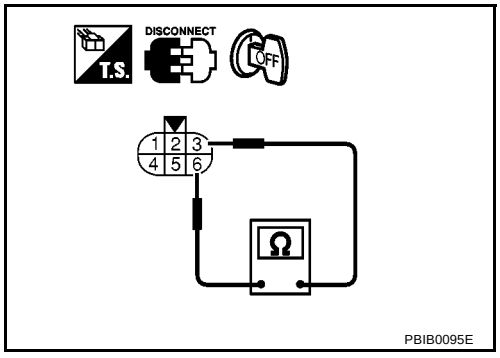

3. If NG, replace electric throttle control actuator and go to next step.
4. Perform EC-69, "Throttle Valve Closed Position Learning" .
5. Perform EC-69, "Idle Air Volume Learning" .

Removal and Installation

BBS002ZS

ELECTRIC THROTTLE CONTROL ACTUATOR

Refer to EM-18, "AIR CLEANER AND AIR DUCT" .

DTC P1124, P1126 THROTTLE CONTROL MOTOR RELAY

PFP:16119

Component Description

BBS002ZT

Power supply for the throttle control motor is provided to the ECM via throttle control motor relay. The throttle control motor relay is ON/OFF controlled by the ECM. When the ignition switch is turned ON, the ECM sends an ON signal to throttle control motor relay and battery voltage is provided to the ECM. When the ignition switch is turned OFF, the ECM sends an OFF signal to throttle control motor relay and battery voltage is not provided to the ECM.

CONSULT-II Reference Value in Data Monitor Mode

BBS002ZU

Specification data are reference values.

MONITOR ITEM	CONDITION	SPECIFICATION
THRTL RELAY	● Ignition switch: ON	ON

On Board Diagnosis Logic

BBS002ZV

These self-diagnoses have the one trip detection logic.

DTC No.	Trouble diagnosis name	DTC detecting condition	Possible cause
P1124 1124	Throttle control motor relay circuit short	ECM detects the throttle control motor relay is stuck ON.	● Harness or connectors (Throttle control motor relay circuit is shorted.) ● Throttle control motor relay
P1126 1126	Throttle control motor relay circuit open	ECM detects a voltage of power source for throttle control motor is excessively low.	● Harness or connectors (Throttle control motor relay circuit is open.) ● Throttle control motor relay

FAIL-SAFE MODE

When the malfunction is detected, the ECM enters fail-safe mode and the MI lights up.

Engine operating condition in fail-safe mode
ECM stops the electric throttle control actuator control, throttle valve is maintained at a fixed opening (approx. 5 degrees) by the return spring.

DTC Confirmation Procedure

BBS002ZW

NOTE:
If DTC Confirmation Procedure has been previously conducted, always turn ignition switch OFF and wait at least 10 seconds before conducting the next test.

PROCEDURE FOR DTC P1124

TESTING CONDITION:
Before performing the following procedure, confirm that battery voltage is more than 8V.

With CONSULT-II

1. Turn ignition switch ON and wait at least 1 second.
2. Select “DATA MONITOR” mode with CONSULT-II.
3. If DTC is detected, go to EC-302, "Diagnostic Procedure" .

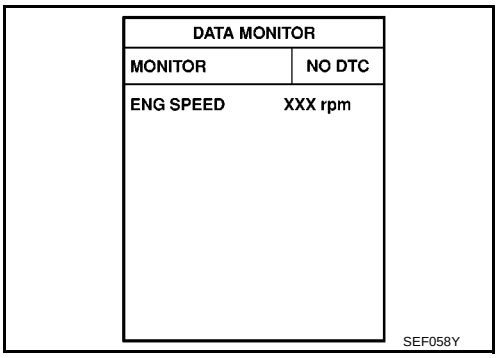

With GST

Follow the procedure “With CONSULT-II” above.

PROCEDURE FOR DTC P1126

With CONSULT-II

1. Turn ignition switch ON and wait at least 2 seconds.
2. Select “DATA MONITOR” mode with CONSULT-II.
3. Start engine and let it idle for 5 seconds.
4. If DTC is detected, go to EC-302, "Diagnostic Procedure" .

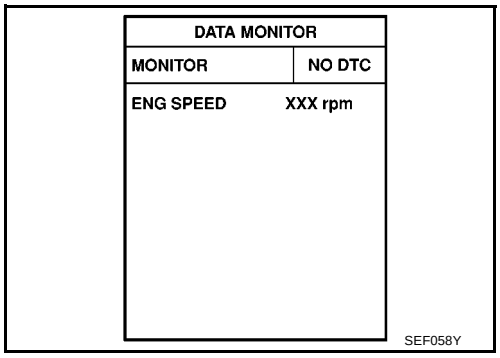

With GST

Follow the procedure “With CONSULT-II” above.

Wiring Diagram

BBS002ZX

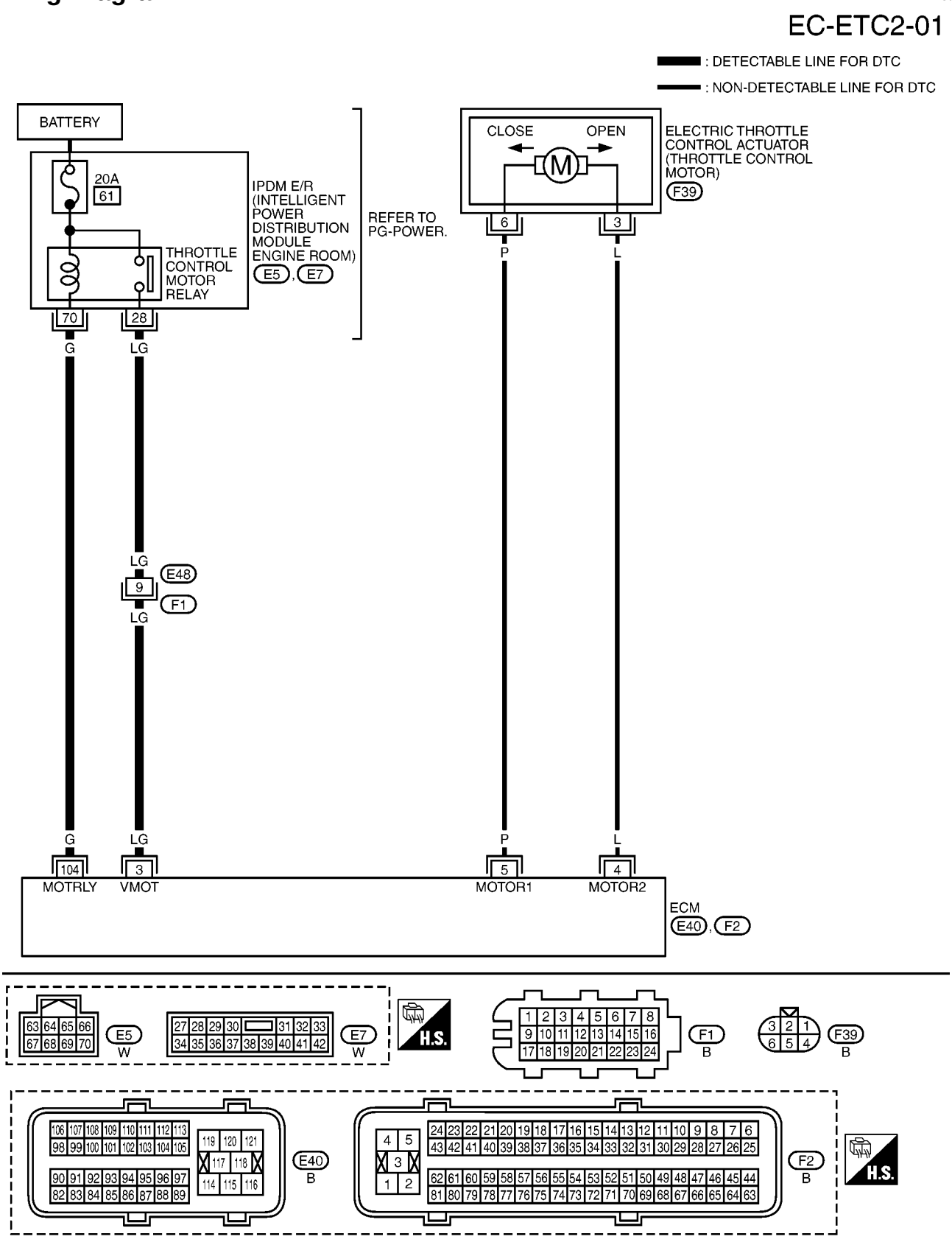

MBWA1521E

Specification data are reference values and are measured between each terminal and ground.
Pulse signal is measured by CONSULT-II.

CAUTION:

Do not use ECM ground terminals when measuring input/output voltage. Doing so may result in damage to the ECM's transistor. Use a ground other than ECM terminals, such as the ground.

TERMINAL NO.	WIRE COLOR	ITEM	CONDITION	DATA (DC Voltage)
3	LG	Throttle control motor relay power supply	**[Ignition switch: ON]**	BATTERY VOLTAGE (11 - 14V)
4	L	Throttle control motor (Close)	**[Ignition switch: ON]** ● **Engine stopped** ● Shift lever position: 1st ● Accelerator pedal: Fully released	0 - 14V★ 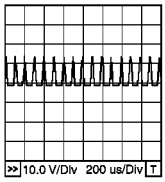 PBIB0534E
5	P	Throttle control motor (Open)	**[Ignition switch: ON]** ● **Engine stopped** ● Shift lever position: 1st ● Accelerator pedal: Fully depressed	0 - 14V★ 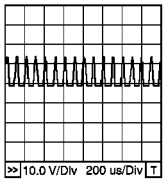 PBIB0533E
104	G	Throttle control motor relay	**[Ignition switch: OFF]**	BATTERY VOLTAGE (11 - 14V)
			[Ignition switch: ON]	0 - 1.0V

★: Average voltage for pulse signal (Actual pulse signal can be confirmed by oscilloscope.)

Diagnostic Procedure

BBS002ZY

1. CHECK THROTTLE CONTROL MOTOR RELAY POWER SUPPLY CIRCUIT-I

1. Turn ignition switch OFF.
2. Check voltage between ECM terminal 104 and ground with CONSULT-II or tester.

Voltage: Battery voltage.

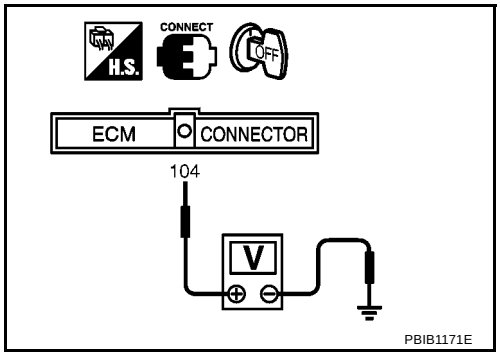

OK or NG

OK >> GO TO 4.
NG >> GO TO 2.

2. CHECK THROTTLE CONTROL MOTOR RELAY POWER SUPPLY CIRCUIT-II

1. Disconnect ECM harness connector.
2. Disconnect IPDM E/R harness connector E5.
3. Check continuity between ECM terminal 104 and IPDM E/R terminal 70.

Continuity should exist.

4. Also check harness for short to ground and short to power.

OK or NG

OK >> GO TO 3.
NG >> Repair open circuit or short to ground or short to power in harness or connectors.

3. CHECK FUSE

1. Disconnect 20A fuse.
2. Check 20A fuse for blown.

OK or NG

OK >> GO TO 7.
NG >> Replace 20A fuse.

4. CHECK THROTTLE CONTROL MOTOR RELAY INPUT SIGNAL CIRCUIT-I

1. Reconnect all disconnected connectors.
2. Check voltage between ECM terminal 3 and ground under the following conditions with CONSULT-II or tester.

Ignition switch	Voltage
OFF	Approximately 0V
ON	Battery voltage (11 - 14V)

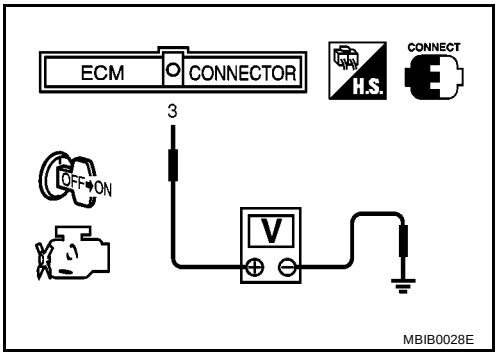

OK or NG

OK >> GO TO 7.
NG >> GO TO 5.

5. CHECK THROTTLE CONTROL MOTOR RELAY INPUT SIGNAL CIRCUIT-II

1. Turn ignition switch OFF.
2. Disconnect ECM harness connector.
3. Disconnect IPDM E/R harness connector E7.
4. Check continuity between ECM terminal 3 and IPDM E/R terminal 28.
   Refer to Wiring Diagram.

Continuity should exist.

5. Also check harness for short to ground and short to power.

OK or NG

OK >> GO TO 7.
NG >> GO TO 6.

6. DETECT MALFUNCTIONING PART

Check the following.

- Harness connectors E48, F1
- Harness for open or short between ECM and IPDM E/R

>> Repair open circuit or short to ground or short to power in harness or connectors.

7. CHECK INTERMITTENT INCIDENT

Refer to EC-127, "TROUBLE DIAGNOSIS FOR INTERMITTENT INCIDENT" .

OK or NG

OK >> Replace IPDM E/R. Refer to PG-18, "IPDM E/R (INTELLIGENT POWER DISTRIBUTION MODULE ENGINE ROOM)" .

NG >> Repair or replace harness or connectors.

DTC P1128 THROTTLE CONTROL MOTOR

PFP:16119

Component Description

BBS002ZZ

The throttle control motor is operated by the ECM and it opens and closes the throttle valve.
The current opening angle of the throttle valve is detected by the throttle position sensor and it provides feedback to the ECM to control the throttle control motor to make the throttle valve opening angle properly in response to driving condition.

On Board Diagnosis Logic

BBS00300

This self-diagnosis has the one trip detection logic.

DTC No.	Trouble diagnosis name	DTC detecting condition	Possible cause
P1128 1128	Throttle control motor circuit short	ECM detects short in both circuits between ECM and throttle control motor.	● Harness or connectors (Throttle control motor circuit is shorted.) ● Electric throttle control actuator (Throttle control motor)

FAIL-SAFE MODE

When the malfunction is detected, the ECM enters fail-safe mode and the MI lights up.

Engine operating condition in fail-safe mode
ECM stops the electric throttle control actuator control, throttle valve is maintained at a fixed opening (approx. 5 degrees) by the return spring.

DTC Confirmation Procedure

BBS00301

NOTE:
If DTC Confirmation Procedure has been previously conducted, always turn ignition switch OFF and wait at least 10 seconds before conducting the next test.

WITH CONSULT-II

1. Turn ignition switch ON and wait at least 2 seconds.
2. Select “DATA MONITOR” mode with CONSULT-II.
3. Start engine and let it idle for 5 seconds.
4. If DTC is detected, go to EC-307, "Diagnostic Procedure" .

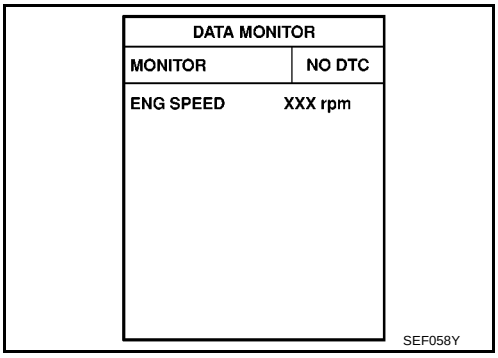

WITH GST

Follow the procedure “WITH CONSULT-II” above.

Wiring Diagram

BBS00302

EC-ETC3-01

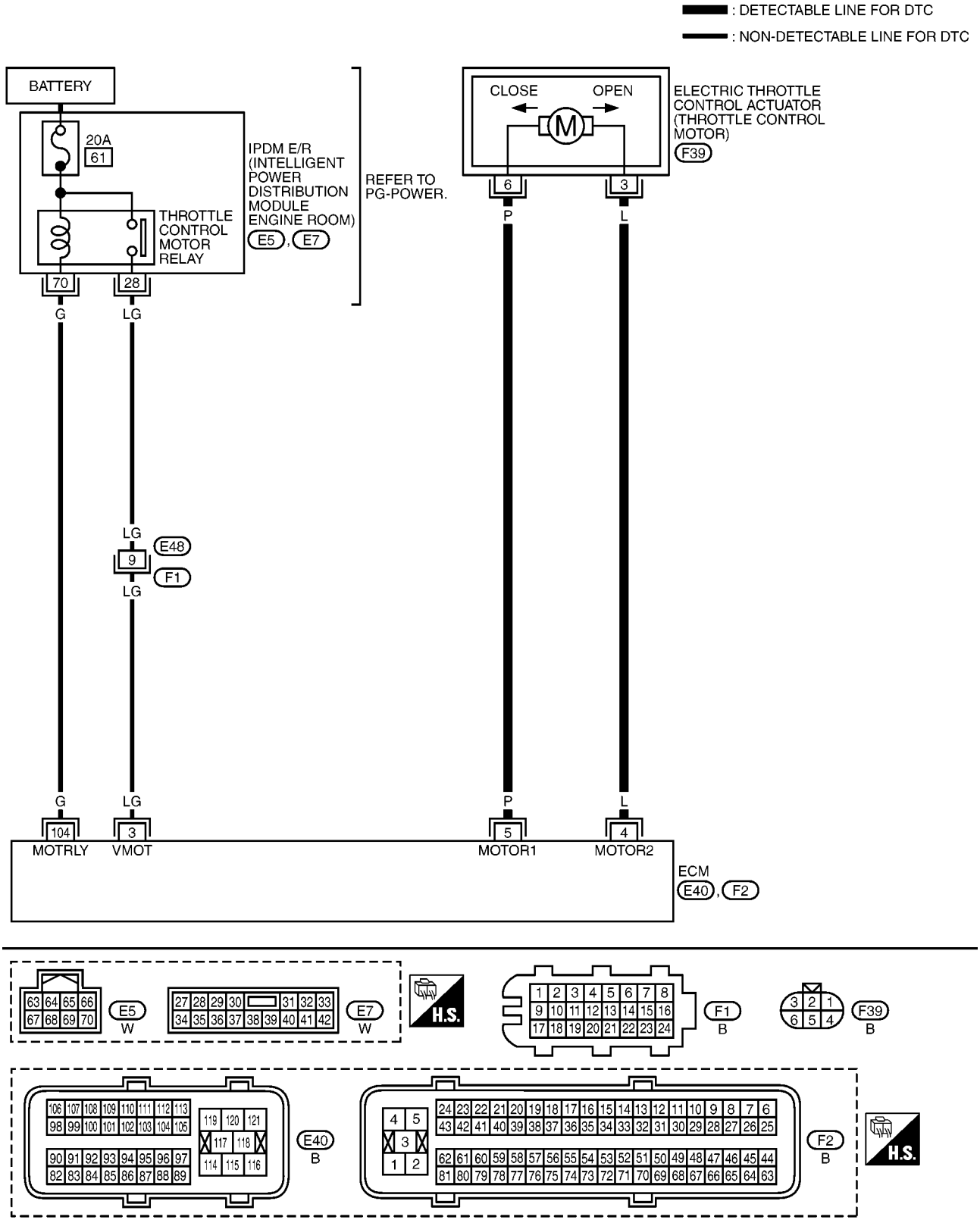

MBWA1522E

Specification data are reference values and are measured between each terminal and ground.
Pulse signal is measured by CONSULT-II.

CAUTION:
Do not use ECM ground terminals when measuring input/output voltage. Doing so may result in damage to the ECM's transistor. Use a ground other than ECM terminals, such as the ground.

TERMINAL NO.	WIRE COLOR	ITEM	CONDITION	DATA (DC Voltage)
3	LG	Throttle control motor relay power supply	**[Ignition switch: ON]**	BATTERY VOLTAGE (11 - 14V)
4	L	Throttle control motor (Close)	**[Ignition switch: ON]** ● **Engine stopped** ● Shift lever position: 1st ● Accelerator pedal: Fully released	0 - 14V★ 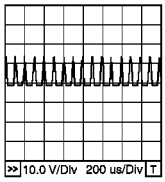 PBIB0534E
5	P	Throttle control motor (Open)	**[Ignition switch: ON]** ● **Engine stopped** ● Shift lever position: 1st ● Accelerator pedal: Fully depressed	0 - 14V★ 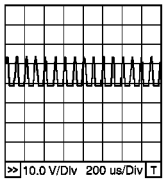 PBIB0533E
104	G	Throttle control motor relay	**[Ignition switch: OFF]**	BATTERY VOLTAGE (11 - 14V)
			[Ignition switch: ON]	0 - 1.0V

★: Average voltage for pulse signal (Actual pulse signal can be confirmed by oscilloscope.)

Diagnostic Procedure

BBS00303

1. CHECK GROUND CONNECTIONS

1. Turn ignition switch OFF.
2. Loosen and retighten ground screws on the body.
   Refer to EC-133, "Ground Inspection" .

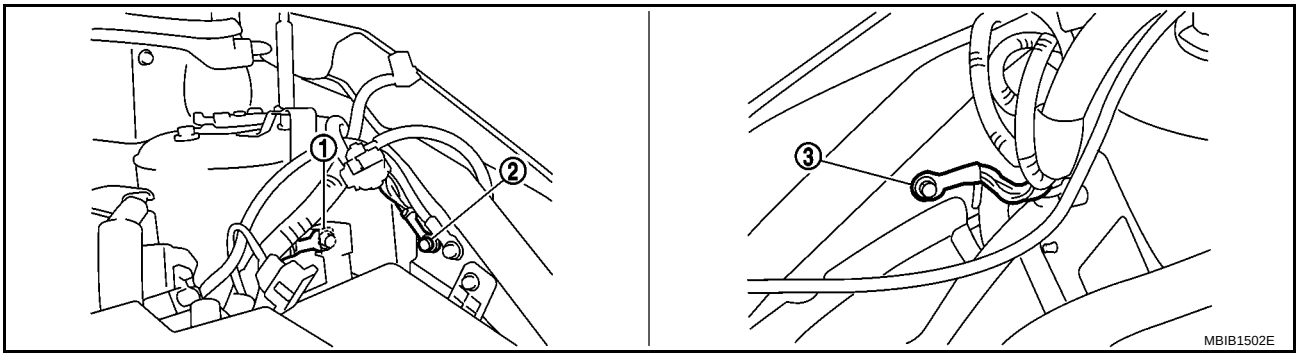

1. Body ground E44
2. Body ground E45
3. Body ground E28

OK or NG

OK >> GO TO 2.
NG >> Repair or replace ground connections.

2. CHECK THROTTLE CONTROL MOTOR OUTPUT SIGNAL CIRCUIT FOR OPEN OR SHORT

1. Disconnect electric throttle control actuator harness connector.
2. Disconnect ECM harness connector.
3. Check harness continuity between the following terminals. Refer to Wiring Diagram.

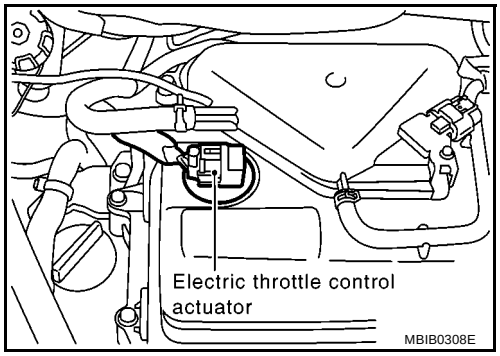

Electric throttle control actuator terminal	ECM terminal	Continuity
3	4	Should exist
	5	Should not exist
6	4	Should not exist
	5	Should exist

4. Also check harness for short to ground and short to power.

OK or NG

OK >> GO TO 3.
NG >> Repair or replace.

3. CHECK THROTTLE CONTROL MOTOR

Refer to EC-308, "Component Inspection" .

OK or NG

OK >> GO TO 4.
NG >> GO TO 5.

4. CHECK INTERMITTENT INCIDENT

Refer to EC-127, "TROUBLE DIAGNOSIS FOR INTERMITTENT INCIDENT" .

OK or NG

OK >> GO TO 5.
NG >> Repair or replace harness or connectors.

5. REPLACE ELECTRIC THROTTLE CONTROL ACTUATOR

1. Replace the electric throttle control actuator.
2. Perform EC-69, "Throttle Valve Closed Position Learning" .
3. Perform EC-69, "Idle Air Volume Learning" .

>> **INSPECTION END**

Component Inspection

BBS00304

THROTTLE CONTROL MOTOR

1. Disconnect electric throttle control actuator harness connector.
2. Check resistance between terminals 3 and 6.

Resistance: Approximately 1 - 15 Ω [at 25 °C (77°F)]

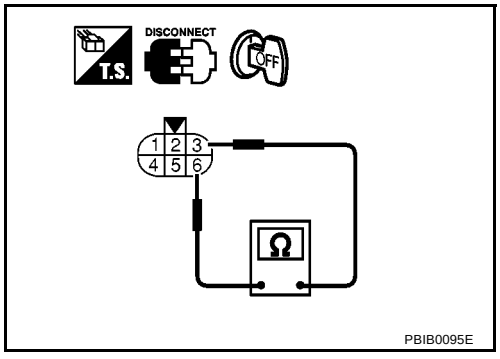

3. If NG, replace electric throttle control actuator and go to next step.
4. Perform EC-69, "Throttle Valve Closed Position Learning" .
5. Perform EC-69, "Idle Air Volume Learning" .

Removal and Installation

BBS00305

ELECTRIC THROTTLE CONTROL ACTUATOR

Refer to EM-18, "AIR CLEANER AND AIR DUCT" .

DTC P1143 HO2S1

PFP:22690

Component Description

BBS00306

The heated oxygen sensor 1 is placed into the exhaust manifold. It detects the amount of oxygen in the exhaust gas compared to the outside air. The heated oxygen sensor 1 has a closed-end tube made of ceramic zirconia. The zirconia generates voltage from approximately 1V in richer conditions to 0V in leaner conditions. The heated oxygen sensor 1 signal is sent to the ECM. The ECM adjusts the injection pulse duration to achieve the ideal air-fuel ratio. The ideal air-fuel ratio occurs near the radical change from 1V to 0V.

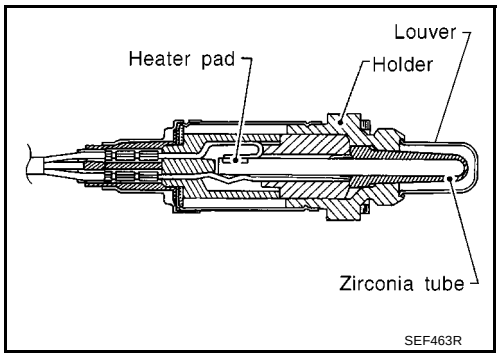

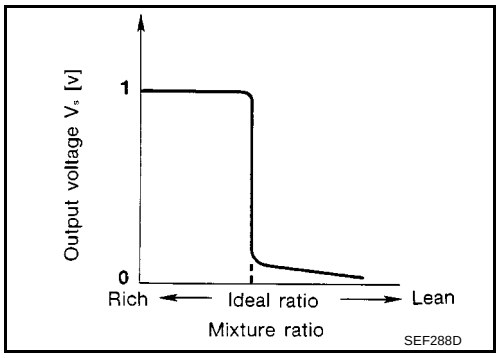

CONSULT-II Reference Value in Data Monitor Mode

BBS00307

Specification data are reference values.

MONITOR ITEM	CONDITION		SPECIFICATION
HO2S1 (B1)	● Engine: After warming up	Maintaining engine speed at 2,000 rpm	0 - 0.3V ←→ Approx. 0.6 - 1.0V
HO2S1 MNTR (B1)			LEAN ←→ RICH Changes more than 5 times during 10 seconds.

On Board Diagnosis Logic

BBS00308

To judge the malfunction, the output from the heated oxygen sensor 1 is monitored to determine whether the “rich” output is sufficiently high and whether the “lean” output is sufficiently low. When both the outputs are shifting to the lean side, the malfunction will be detected.

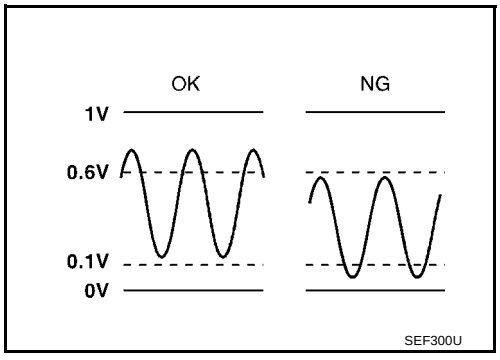

DTC No.	Trouble diagnosis name	DTC detecting condition	Possible cause
P1143 1143	Heated oxygen sensor 1 lean shift monitoring	The maximum and minimum voltage from the sensor are not reached to the specified voltages.	● Heated oxygen sensor 1 ● Heated oxygen sensor 1 heater ● Fuel pressure ● Fuel injector ● Intake air leak

DTC Confirmation Procedure

BBS00309

CAUTION:
Always drive vehicle at a safe speed.

NOTE:
If DTC Confirmation Procedure has been previously conducted, always turn ignition switch OFF and wait at least 10 seconds before conducting the next test.

TESTING CONDITION:

- **Always perform at a temperature above –10°C (14°F).**
- **Before performing following procedure, confirm that battery voltage is more than 11V at idle.**

WITH CONSULT-II

1. Start engine and warm it up to normal operating temperature.
2. Stop engine and wait at least 10 seconds.
3. Turn ignition switch ON and select “HO2S1 (B1) P1143” of “HO2S1” in “DTC WORK SUPPORT” mode with CONSULT-II.
4. Touch “START”.
5. Start engine and let it idle for at least 3 minutes.

   NOTE:
   Never raise engine speed above 3,600 rpm after this step. If the engine speed limit is exceeded, return to step 5.

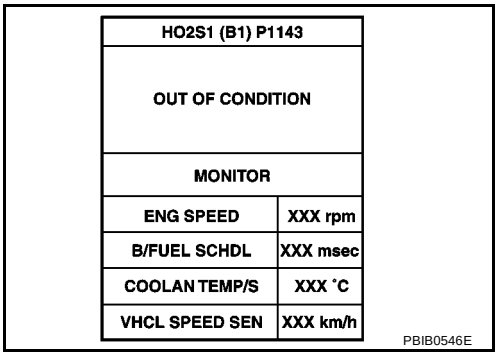

6. When the following conditions are met, “TESTING” will be displayed on the CONSULT-II screen. Maintain the conditions continuously until “TESTING” changes to “COMPLETED”. (It will take approximately 50 seconds or more.)

ENG SPEED	1,500 - 3,200 rpm
VHCL SPEED SE	50 - 100 km/h (31 - 62 MPH)
B/FUEL SCHDL	1.8 - 5.5 msec
Shift lever	Suitable position

   If “TESTING” is not displayed after 5 minutes, retry from step 2.

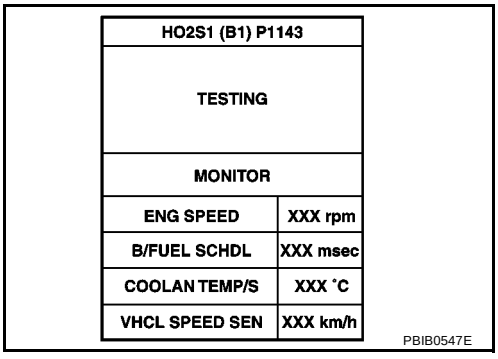

7. Make sure that “OK” is displayed after touching “SELF-DIAG RESULTS”. If “NG” is displayed, refer to EC-312, "Diagnostic Procedure" .

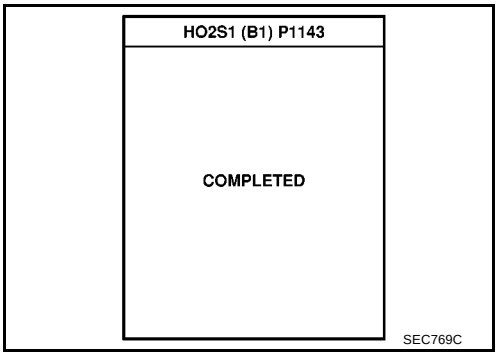

Overall Function Check

BBS0030A

Use this procedure to check the overall function of the heated oxygen sensor 1 circuit. During this check, a 1st trip DTC might not be confirmed.

WITH GST

1. Start engine and warm it up to normal operating temperature.
2. Set voltmeter probes between ECM terminal 35 (HO2S1 signal) and ground.
3. Check one of the following with engine speed held at 2,000 rpm constant under no load.

- The maximum voltage is over 0.6V at least one time.
- The minimum voltage is over 0.1V at least one time.

4. If NG, go to EC-312, "Diagnostic Procedure" .

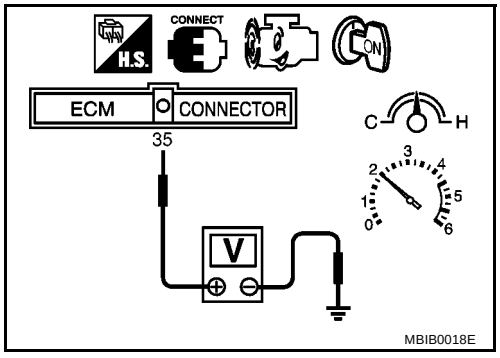

Diagnostic Procedure

BBS0030B

1. CHECK GROUND CONNECTIONS

1. Turn ignition switch OFF.
2. Loosen and retighten ground screws on the body.
   Refer to EC-133, "Ground Inspection" .

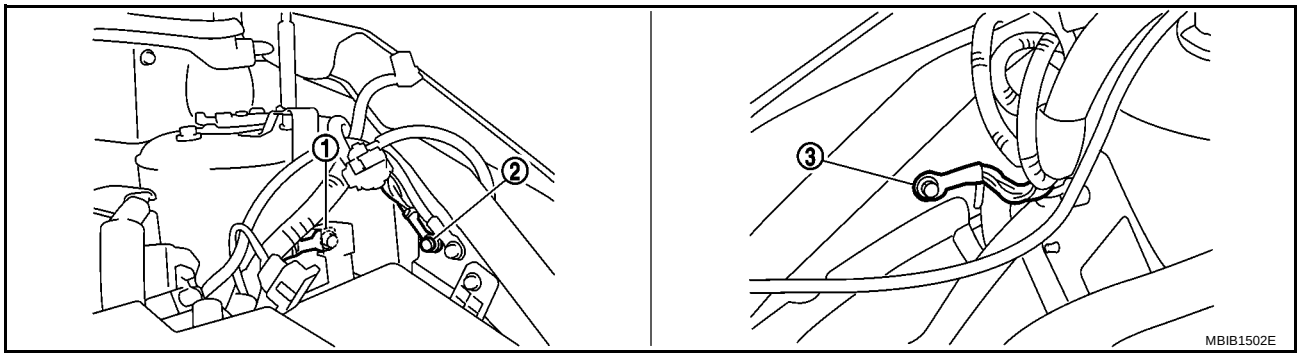

1. Body ground E44
2. Body ground E45
3. Body ground E28

OK or NG

OK >> GO TO 2.
NG >> Repair or replace ground connections.

2. RETIGHTEN HEATED OXYGEN SENSOR 1

Loosen and retighten heated oxygen sensor 1 (2).

- ⇦: Vehicle front
- Exhaust manifold cover (1)

Tightening torque: 50 N·m (5.1 kg-m, 37 ft-lb)

>> GO TO 3.

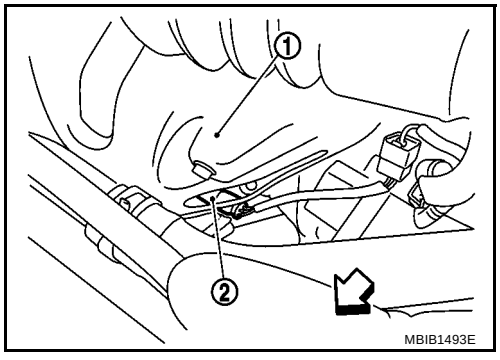

3. CHECK FOR INTAKE AIR LEAK

Listen for an intake air leak after the manifold absolute pressure sensor.

OK or NG

OK >> GO TO 4.
NG >> Repair or replace.

4. CLEAR THE SELF-LEARNING DATA

With CONSULT-II

1. Start engine and warm it up to normal operating temperature.
2. Select “SELF-LEARNING CONT” in “WORK SUPPORT” mode with CONSULT-II.
3. Clear the self-learning control coefficient by touching “CLEAR”.
4. Run engine for at least 10 minutes at idle speed.
   Is the 1st trip DTC P0171 detected?
   Is it difficult to start engine?

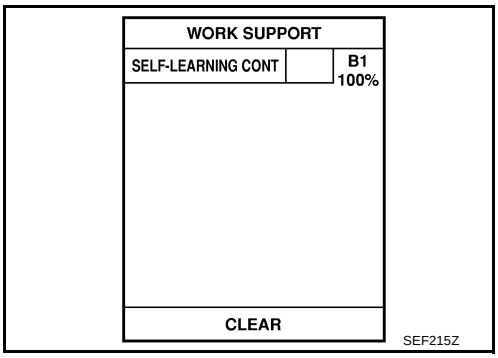

Without CONSULT-II

1. Start engine and warm it up to normal operating temperature.
2. Turn ignition switch OFF.
3. Disconnect manifold absolute pressure sensor harness connector, and restart and run engine for at least 5 seconds at idle speed.
4. Stop engine and reconnect manifold absolute pressure sensor harness connector.
5. Make sure that DTC P0107 is displayed.
6. Erase the DTC memory. Refer to EC-57, "HOW TO ERASE EMISSION-RELATED DIAGNOSTIC INFORMATION" .
7. Make sure that DTC P0000 is displayed.
8. Run engine for at least 10 minutes at idle speed.
   Is the 1st trip DTC P0171 detected?
   Is it difficult to start engine?

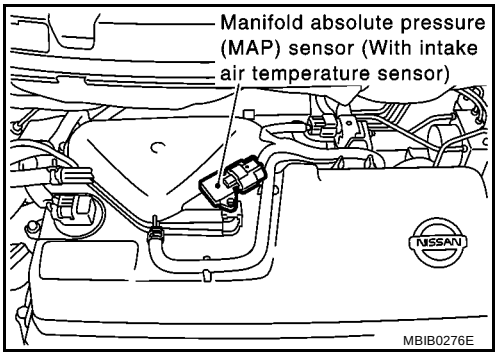

Yes or No

Yes >> Perform trouble diagnosis for DTC P0171. Refer to EC-218 .
No >> GO TO 5.

5. CHECK HEATED OXYGEN SENSOR 1 HEATER

Refer to EC-148, "Component Inspection" .

OK or NG

OK >> GO TO 6.
NG >> Replace heated oxygen sensor 1.

6. CHECK HEATED OXYGEN SENSOR 1

Refer to EC-314, "Component Inspection" .

OK or NG

OK >> GO TO 7.
NG >> Replace heated oxygen sensor 1.

7. CHECK INTERMITTENT INCIDENT

Refer to EC-127, "TROUBLE DIAGNOSIS FOR INTERMITTENT INCIDENT" .
For circuit, refer to EC-180, "Wiring Diagram" .

>> **INSPECTION END**

Component Inspection

BBS0030C

HEATED OXYGEN SENSOR 1

With CONSULT-II

1. Start engine and warm it up to normal operating temperature.
2. Select “MANU TRIG” and adjust “TRIGGER POINT” to 100% in “DATA MONITOR” mode with CONSULT-II.
3. Select “HO2S1 (B1)” and “HO2S1 MNTR (B1)”.
4. Hold engine speed at 2,000 rpm under no load during the following steps.
5. Touch “RECORD” on CONSULT-II screen.

DATA MONITOR	
MONITOR	NO DTC
ENG SPEED	XXX rpm
COOLAN TEMP/S	XXX °C
HO2S1 (B1)	XXX V
HO2S1 MNTR (B1)	LEAN

MBIB0301E

6. Check the following.
   - “HO2S1 MNTR (B1)” in “DATA MONITOR” mode changes from “RICH” to “LEAN” to “RICH” more than 5 times in 10 seconds.
     5 times (cycles) are counted as shown in the figure.
   - “HO2S1 (B1)” voltage goes above 0.6V at least once.
   - “HO2S1 (B1)” voltage goes below 0.3V at least once.
   - “HO2S1 (B1)” voltage never exceeds 1.0V.

cycle | 1 | 2 | 3 | 4 | 5 |
HO2S1 MNTR (B1) R-L-R-L-R-L-R-L-R-L-R

R means HO2S1 MNTR (B1) indicates RICH
L means HO2S1 MNTR (B1) indicates LEAN

SEF217YA

Trigger	ENG SPEED	HO2S1 (B1)
	rpm	V
XXX	XXX	XXX
XXX	XXX	XXX
XXX	XXX	XXX
XXX	XXX	XXX
XXX	XXX	XXX
XXX	XXX	XXX
XXX	XXX	XXX
XXX	XXX	XXX
XXX	XXX	XXX
XXX	XXX	XXX
XXX	XXX	XXX
XXX	XXX	XXX
XXX	XXX	XXX

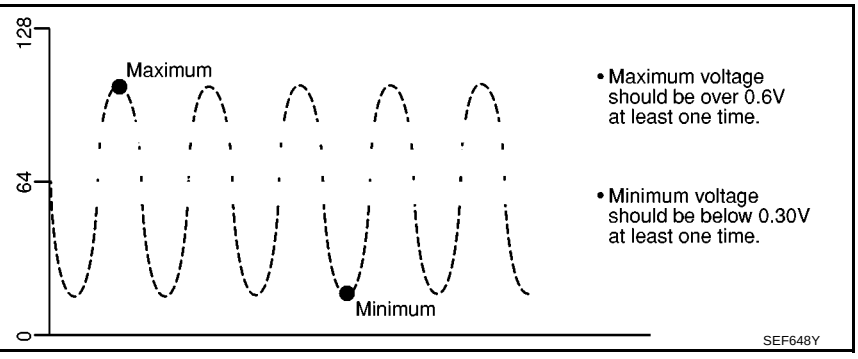

CAUTION:

- **Discard any heated oxygen sensor which has been dropped from a height of more than 0.5 m (19.7 in) onto a hard surface such as a concrete floor; use a new one.**
- **Before installing new oxygen sensor, clean exhaust system threads using Oxygen Sensor Thread Cleaner and approved anti-seize lubricant.**

Without CONSULT-II

1. Start engine and warm it up to normal operating temperature.
2. Set voltmeter probes between ECM terminal 35 (HO2S1 signal) and ground.
3. Check the following with engine speed held at 2,000 rpm constant under no load.
   - The voltage fluctuates between 0 to 0.3V and 0.6 to 1.0V more than 5 times within 10 seconds.
   - The maximum voltage is over 0.6V at least one time.
   - The minimum voltage is below 0.3V at least one time.
   - The voltage never exceeds 1.0V.

   1 time: 0 - 0.3V → 0.6 - 1.0V → 0 - 0.3V
   2 times: 0 - 0.3V → 0.6 - 1.0V → 0 - 0.3V → 0.6 - 1.0V → 0 - 0.3V

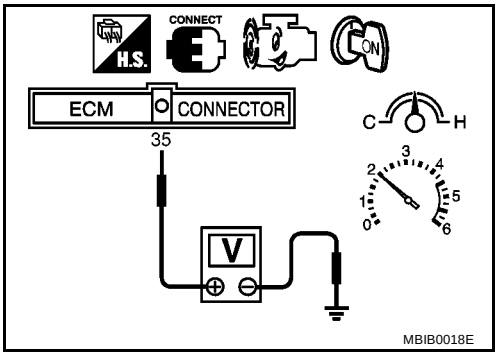

CAUTION:

- **Discard any heated oxygen sensor which has been dropped from a height of more than 0.5 m (19.7 in) onto a hard surface such as a concrete floor; use a new one.**
- **Before installing new oxygen sensor, clean exhaust system threads using Oxygen Sensor Thread Cleaner and approved anti-seize lubricant.**

Removal and Installation

BBS0030D

HEATED OXYGEN SENSOR 1

Refer to EM-24, "EXHAUST MANIFOLD AND THREE WAY CATALYST" .

DTC P1144 HO2S1

PFP:22690

Component Description

BBS0030E

The heated oxygen sensor 1 is placed into the exhaust manifold. It detects the amount of oxygen in the exhaust gas compared to the outside air. The heated oxygen sensor 1 has a closed-end tube made of ceramic zirconia. The zirconia generates voltage from approximately 1V in richer conditions to 0V in leaner conditions. The heated oxygen sensor 1 signal is sent to the ECM. The ECM adjusts the injection pulse duration to achieve the ideal air-fuel ratio. The ideal air-fuel ratio occurs near the radical change from 1V to 0V.

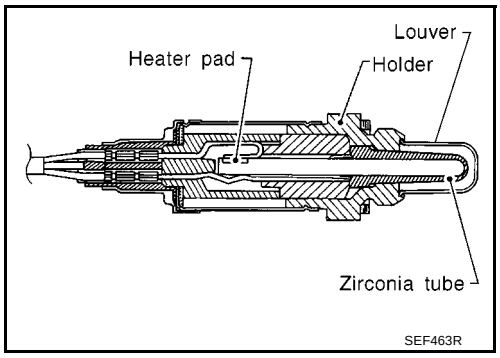

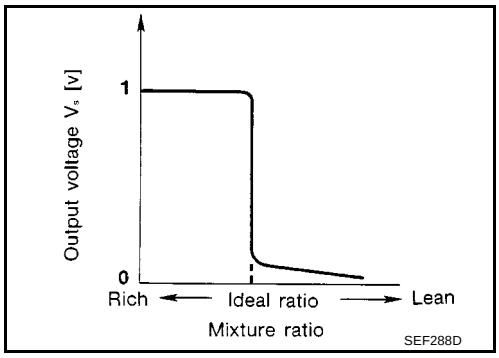

CONSULT-II Reference Value in Data Monitor Mode

BBS0030F

Specification data are reference values.

MONITOR ITEM	CONDITION		SPECIFICATION
HO2S1 (B1)	● Engine: After warming up	Maintaining engine speed at 2,000 rpm	0 - 0.3V ←→ Approx. 0.6 - 1.0V
HO2S1 MNTR (B1)			LEAN ←→ RICH Changes more than 5 times during 10 seconds.

On Board Diagnosis Logic

BBS0030G

To judge the malfunction, the output from the heated oxygen sensor 1 is monitored to determine whether the “rich” output is sufficiently high and whether the “lean” output is sufficiently low. When both the outputs are shifting to the rich side, the malfunction will be detected.

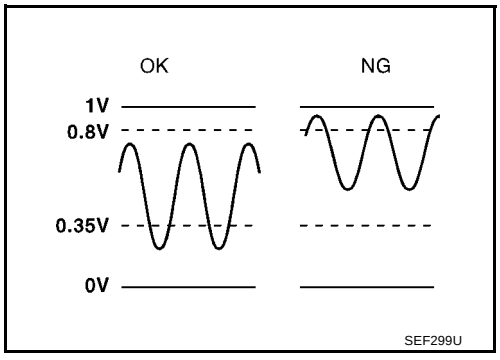

DTC No.	Trouble diagnosis name	DTC detecting condition	Possible cause
P1144 1144	Heated oxygen sensor 1 rich shift monitoring	The maximum and minimum voltages from the sensor are beyond the specified voltages.	● Heated oxygen sensor 1 ● Heated oxygen sensor 1 heater ● Fuel pressure ● Fuel injector

DTC Confirmation Procedure

BBS0030H

CAUTION:
Always drive vehicle at a safe speed.

NOTE:
If DTC Confirmation Procedure has been previously conducted, always turn ignition switch OFF and wait at least 10 seconds before conducting the next test.

TESTING CONDITION:

- **Always perform at a temperature above –10°C (14°F).**
- **Before performing the following procedure, confirm that battery voltage is more than 11V at idle.**

WITH CONSULT-II

1. Start engine and warm it up to normal operating temperature.
2. Stop engine and wait at least 5 seconds.
3. Turn ignition switch ON and select “HO2S1 (B1) P1144” of “HO2S1” in “DTC WORK SUPPORT” mode with CONSULT-II.
4. Touch “START”.
5. Start engine and let it idle for at least 3 minutes.

   NOTE:
   Never raise engine speed above 3,600 rpm after this step. If the engine speed limit is exceeded, return to step 5.

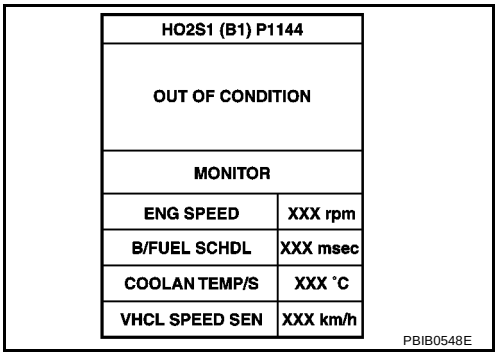

6. When the following conditions are met, “TESTING” will be displayed on the CONSULT-II screen. Maintain the conditions continuously until “TESTING” changes to “COMPLETED”. (It will take approximately 50 seconds or more.)

ENG SPEED	1,500 - 3,200 rpm
VHCL SPEED SE	50 - 100 km/h (31 - 62 MPH)
B/FUEL SCHDL	1.8 - 5.5 msec
Shift lever	Suitable position

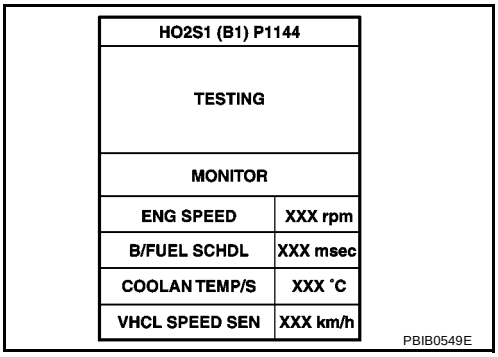

   If “TESTING” is not displayed after 5 minutes, retry from step 2.

7. Make sure that “OK” is displayed after touching “SELF-DIAG RESULTS”. If “NG” is displayed, refer to EC-318, "Diagnostic Procedure" .

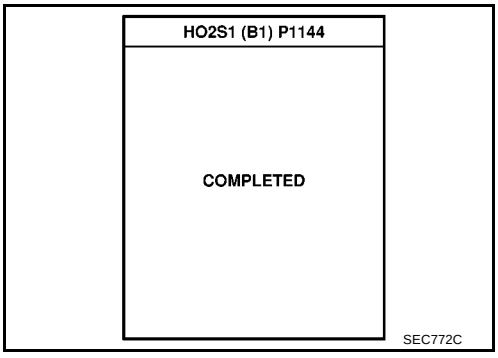

Overall Function Check

BBS0030I

Use this procedure to check the overall function of the heated oxygen sensor 1 circuit. During this check, a 1st trip DTC might not be confirmed.

WITH GST

1. Start engine and warm it up to normal operating temperature.
2. Set voltmeter probes between ECM terminal 35 (HO2S1 signal) and ground.
3. Check one of the following with engine speed held at 2,000 rpm constant under no load.

- The maximum voltage is below 0.8V at least one time.
- The minimum voltage is below 0.35V at least one time.

4. If NG, go to EC-318, "Diagnostic Procedure" .

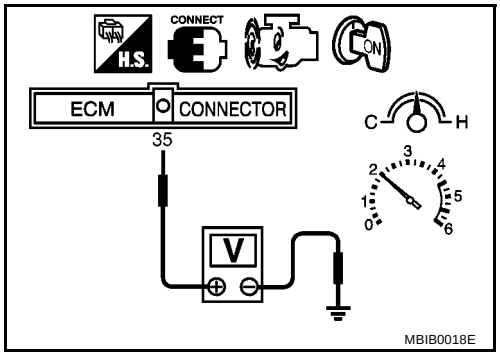

Diagnostic Procedure

BBS0030J

1. CHECK GROUND CONNECTIONS

1. Turn ignition switch OFF.
2. Loosen and retighten ground screws on the body.
   Refer to EC-133, "Ground Inspection" .

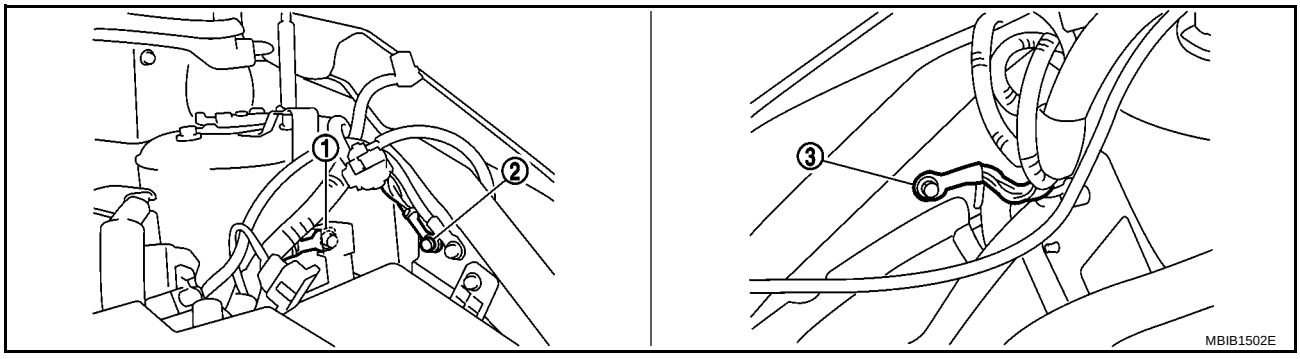

1. Body ground E44
2. Body ground E45
3. Body ground E28

OK or NG

OK >> GO TO 2.
NG >> Repair or replace ground connections.

2. RETIGHTEN HEATED OXYGEN SENSOR 1

Loosen and retighten heated oxygen sensor 1 (2).

- ⇦: Vehicle front
- Exhaust manifold cover (1)

Tightening torque: 50 N·m (5.1 kg-m, 37 ft-lb)

>> GO TO 3.

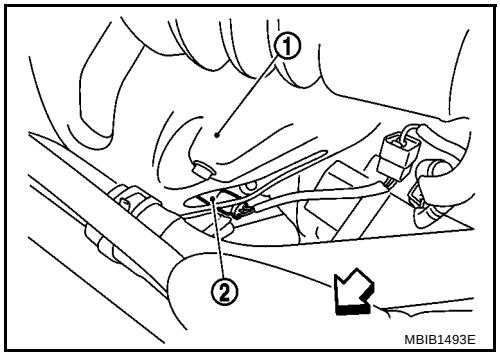

3. CLEAR THE SELF-LEARNING DATA

With CONSULT-II

1. Start engine and warm it up to normal operating temperature.
2. Select “SELF-LEARNING CONT” in “WORK SUPPORT” mode with CONSULT-II.
3. Clear the self-learning control coefficient by touching “CLEAR”.
4. Run engine for at least 10 minutes at idle speed.
   Is the 1st trip DTC P0172 detected?
   Is it difficult to start engine?

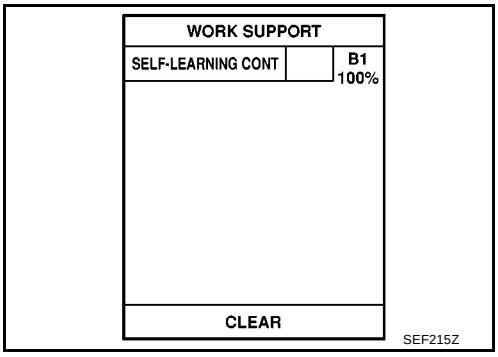

Without CONSULT-II

1. Start engine and warm it up to normal operating temperature.
2. Turn ignition switch OFF.
3. Disconnect manifold absolute pressure sensor harness connector, and restart and run engine for at least 5 seconds at idle speed.
4. Stop engine and reconnect manifold absolute pressure sensor harness connector.
5. Make sure that DTC P0107 is displayed.
6. Erase the DTC memory. Refer to EC-57, "HOW TO ERASE EMISSION-RELATED DIAGNOSTIC INFORMATION" .
7. Make sure that DTC P0000 is displayed.
8. Run engine for at least 10 minutes at idle speed.
   Is the 1st trip DTC P0172 detected?
   Is it difficult to start engine?

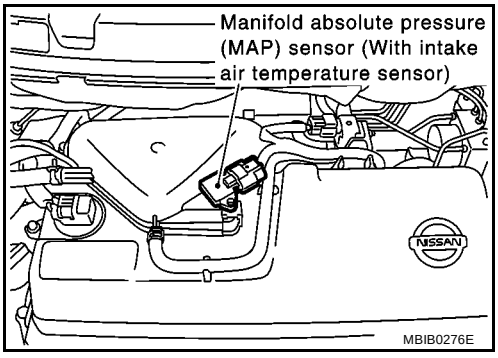

Yes or No

Yes >> Perform trouble diagnosis for DTC P0172. Refer to EC-226 .
No >> GO TO 4.

4. CHECK HO2S1 CONNECTOR FOR WATER

1. Turn ignition switch OFF.
2. Disconnect heated oxygen sensor 1 harness connector (1).
3. Check connectors for water.

Water should not exist.

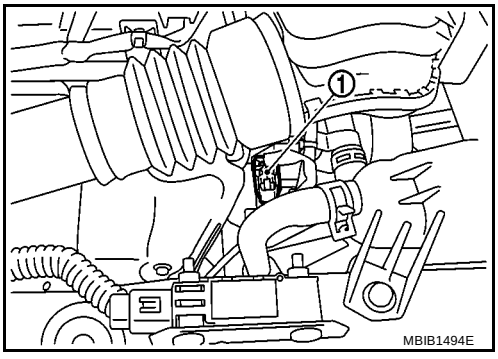

OK or NG

OK >> GO TO 5.
NG >> Repair or replace harness or connectors.

5. CHECK HEATED OXYGEN SENSOR 1 HEATER

Refer to EC-148, "Component Inspection" .

OK or NG

OK >> GO TO 6.
NG >> Replace heated oxygen sensor 1.

6. CHECK HEATED OXYGEN SENSOR 1

Refer to EC-320, "Component Inspection" .

OK or NG

OK >> GO TO 7.
NG >> Replace heated oxygen sensor 1.

7. CHECK INTERMITTENT INCIDENT

Refer to EC-127, "TROUBLE DIAGNOSIS FOR INTERMITTENT INCIDENT" .
For circuit, refer to EC-180, "Wiring Diagram" .

>> **INSPECTION END**

Component Inspection

BBS0030K

HEATED OXYGEN SENSOR 1

With CONSULT-II

1. Start engine and warm it up to normal operating temperature.
2. Select “MANU TRIG” and adjust “TRIGGER POINT” to 100% in “DATA MONITOR” mode with CONSULT-II.
3. Select “HO2S1 (B1)” and “HO2S1 MNTR (B1)”.
4. Hold engine speed at 2,000 rpm under no load during the following steps.
5. Touch “RECORD” on CONSULT-II screen.

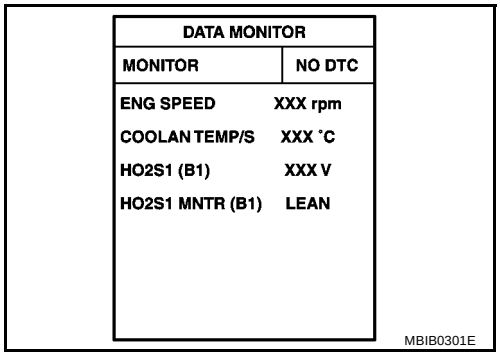

6. Check the following.
   - “HO2S1 MNTR (B1)” in “DATA MONITOR” mode changes from “RICH” to “LEAN” to “RICH” more than 5 times in 10 seconds.
     5 times (cycles) are counted as shown in the figure.
   - “HO2S1 (B1)” voltage goes above 0.6V at least once.
   - “HO2S1 (B1)” voltage goes below 0.3V at least once.
   - “HO2S1 (B1)” voltage never exceeds 1.0V.

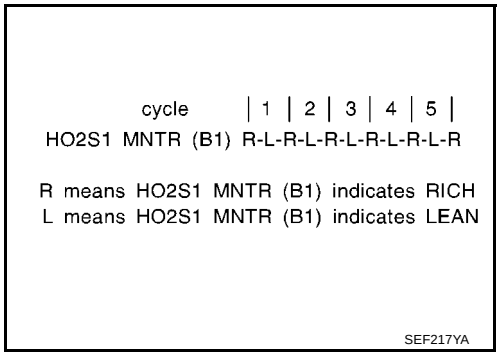

Trigger	ENG SPEED	HO2S1 (B1)
	rpm	V
XXX	XXX	XXX
XXX	XXX	XXX
XXX	XXX	XXX
XXX	XXX	XXX
XXX	XXX	XXX
XXX	XXX	XXX
XXX	XXX	XXX
XXX	XXX	XXX
XXX	XXX	XXX
XXX	XXX	XXX
XXX	XXX	XXX
XXX	XXX	XXX

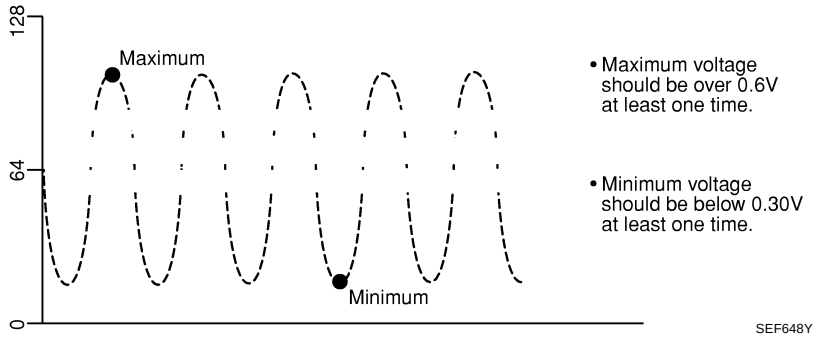

CAUTION:

- **Discard any heated oxygen sensor which has been dropped from a height of more than 0.5 m (19.7 in) onto a hard surface such as a concrete floor; use a new one.**
- **Before installing new oxygen sensor, clean exhaust system threads using Oxygen Sensor Thread Cleaner and approved anti-seize lubricant.**

Without CONSULT-II

1. Start engine and warm it up to normal operating temperature.
2. Set voltmeter probes between ECM terminal 35 (HO2S1 signal) and ground.
3. Check the following with engine speed held at 2,000 rpm constant under no load.
   - The voltage fluctuates between 0 to 0.3V and 0.6 to 1.0V more than 5 times within 10 seconds.
   - The maximum voltage is over 0.6V at least one time.
   - The minimum voltage is below 0.3V at least one time.
   - The voltage never exceeds 1.0V.

   1 time: 0 - 0.3V → 0.6 - 1.0V → 0 - 0.3V
   2 times: 0 - 0.3V → 0.6 - 1.0V → 0 - 0.3V → 0.6 - 1.0V → 0 - 0.3V

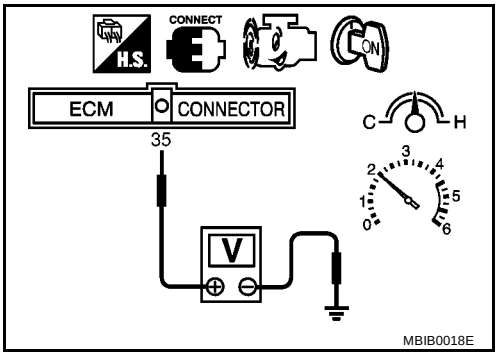

CAUTION:

- **Discard any heated oxygen sensor which has been dropped from a height of more than 0.5 m (19.7 in) onto a hard surface such as a concrete floor; use a new one.**
- **Before installing new oxygen sensor, clean exhaust system threads using Oxygen Sensor Thread Cleaner and approved anti-seize lubricant.**

Removal and Installation

BBS0030L

HEATED OXYGEN SENSOR 1

Refer to EM-24, "EXHAUST MANIFOLD AND THREE WAY CATALYST" .

DTC P1146 HO2S2

PFP:226A0

Component Description

BBS0030M

The heated oxygen sensor 2, after three way catalyst (manifold), monitors the oxygen level in the exhaust gas on each bank.
Even if switching characteristics of the heated oxygen sensor 1 are shifted, the air-fuel ratio is controlled to stoichiometric, by the signal from the heated oxygen sensor 2.
This sensor is made of ceramic zirconia. The zirconia generates voltage from approximately 1V in richer conditions to 0V in leaner conditions.
Under normal conditions the heated oxygen sensor 2 is not used for engine control operation.

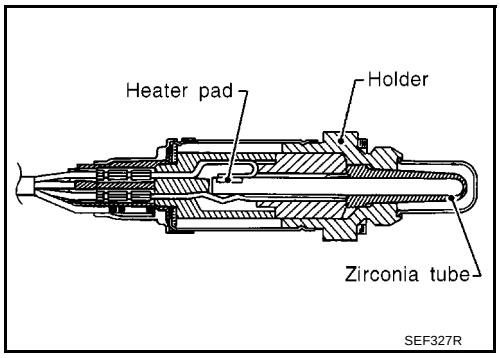

CONSULT-II Reference Value in Data Monitor Mode

BBS0030N

Specification data are reference values.

MONITOR ITEM	CONDITION	SPECIFICATION
HO2S2 (B1)	● Revving engine from idle to 3,000 rpm quickly after the following conditions are met. – Engine: After warming up – Keeping the engine speed between 3,500 and 4,000 rpm for 1 minute and at idle for 1 minute under no load.	0 - 0.3V ←→ Approx. 0.6 - 1.0V
HO2S2 MNTR (B1)		LEAN ←→ RICH

On Board Diagnosis Logic

BBS0030O

The heated oxygen sensor 2 has a much longer switching time between rich and lean than the heated oxygen sensor 1. The oxygen storage capacity of the three way catalyst (manifold) causes the longer switching time. To judge the malfunctions of heated oxygen sensor 2, ECM monitors whether the minimum voltage of sensor is sufficiently low during the various driving condition such as fuel-cut.

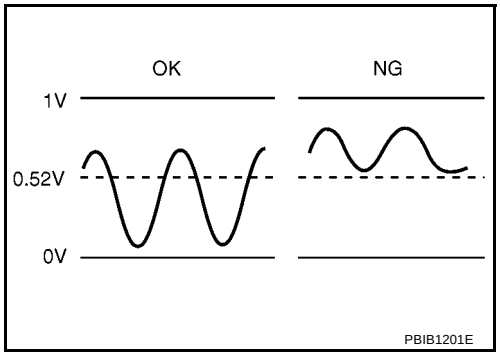

DTC No.	Trouble diagnosis name	DTC detecting condition	Possible cause
P1146 1146	Heated oxygen sensor 2 minimum voltage monitoring	The minimum voltage from the sensor is not reached to the specified voltage.	● Harness or connectors (The sensor circuit is open or shorted.) ● Heated oxygen sensor 2 ● Fuel pressure ● Fuel Injector

DTC Confirmation Procedure

BBS0030P

CAUTION:
Always drive vehicle at a safe speed.

NOTE:
- **"COMPLETED" will appear on CONSULT-II screen when all tests "COND1", "COND2" and "COND3" are completed.**
- If DTC confirmation Procedure has been previously conducted, always turn ignition switch OFF and wait at least 10 seconds before conducting the next test.

TESTING CONDITION:
Never stop engine during this procedure. If the engine is stopped, retry procedure from step 2 in Procedure for COND1.

WITH CONSULT-II

Procedure for COND1

For the best results, perform “DTC WORK SUPPORT” at a temperature of 0 to 30°C(32 to 86°F).

1. Start engine and warm it up to normal operating temperature.
2. Turn ignition switch OFF and wait at least 10 seconds.
3. Start engine and keep the engine speed between 3,500 and 4,000 rpm for at least 1 minute under no load.
4. Let engine idle 1 minute.
5. Select “HO2S2 (B1) P1146” of “HO2S2” in “DTC WORK SUPPORT” mode with CONSULT-II.
6. Touch “START”.
7. Start engine and let it idle for at least 30 seconds.
8. Rev engine up to 2,000 rpm 2 or 3 times quickly under no load.
   If “COMPLETED” appears on CONSULT-II screen, go to step 2 in Procedure for COND3”.
   If “COMPLETED” does not appear on CONSULT-II screen, go to the following step.
9. When the following conditions are met, “TESTING” will be displayed at “COND1” on the CONSULT-II screen. Maintain the conditions continuously until “TESTING” changes to “COMPLETED”. (It will take approximately 60 seconds.)

ENG SPEED	More than 1,500 rpm
B/FUEL SCHDL	More than 1.0 msec
COOLAN TEMP/S	70 - 105°C
Shift lever	Suitable position

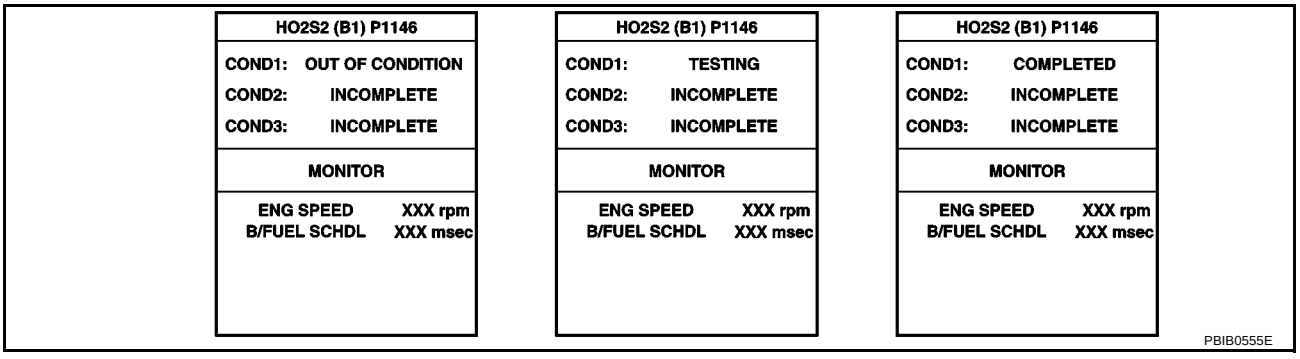

NOTE:

- **If “TESTING” is not displayed after 5 minutes, retry from step 2 in Procedure for COND1.**
- **If “COMPLETED” already appears at “COND2” on CONSULT-II screen before Procedure for COND2 is conducted, it is unnecessary to conduct step 1 in Procedure for COND2.**

Procedure for COND2

1. While driving, release accelerator pedal completed from the above condition [step 9] until “INCOMPLETE” at “COND2” on CONSULT-II screen has turned to “COMPLETED” (It will take approximately 4 seconds.)

   NOTE:
   If “COMPLETE” already appears at “COND3” on CONSULT-II screen before Procedure for COND3 is conducted, it is unnecessary to conduct step 1 in Procedure for COND3.

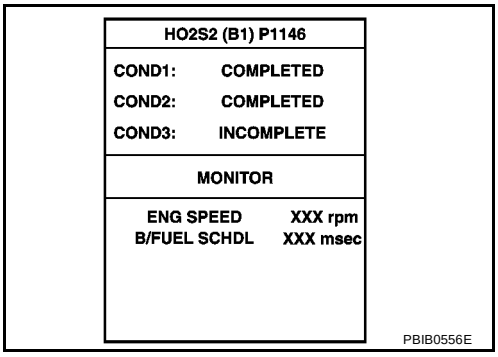

Procedure for COND3

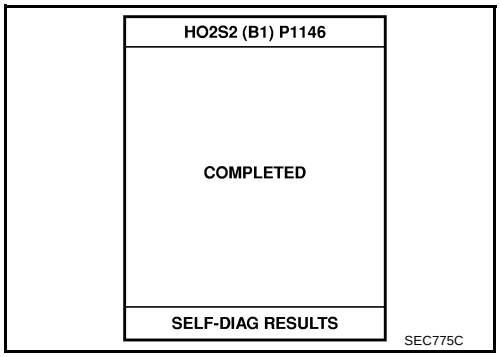

1. Stop vehicle and let it idle until “INCOMPLETE” of “COND3” on CONSULT-II screen has turned to “COMPLETED”. (It will take a maximum of approximately 6 minutes.)
2. Make sure that “OK” is displayed after touching “SELF-DIAG RESULTS”.
   If “NG” is displayed, refer to EC-326, "Diagnostic Procedure" .
   If “CAN NOT BE DIAGNOSED” is displayed, performed the following.

a. Turn ignition switch OFF and leave the vehicle in a cool place (soak the vehicle).
b. Turn ignition switch ON and select “COOLAN TEMP/S” in “DATA MONITOR” mode with CONSULT-II.
c. Start engine and warm it up while monitoring “COOLAN TEMP/S” indication on CONSULT-II.
d. When “COOLAN TEMP/S” indication reaches to 70°C(158°F), go to procedure for COND1 step 3.

Overall Function Check

BBS0030Q

Use this procedure to check the overall function of the heated oxygen sensor 2 circuit. During this check, a 1st trip DTC might not be confirmed.

WITH GST

1. Start engine and warm it up to the operating temperature.
2. Turn ignition switch OFF and wait at least 10 seconds.
3. Start engine and keep the engine speed between 3,500 and 4,000 rpm for at least 1 minute under no load.
4. Let engine idle for 1 minute.
5. Set voltmeter probes between ECM terminal 16 (HO2S2 signal) and ground.

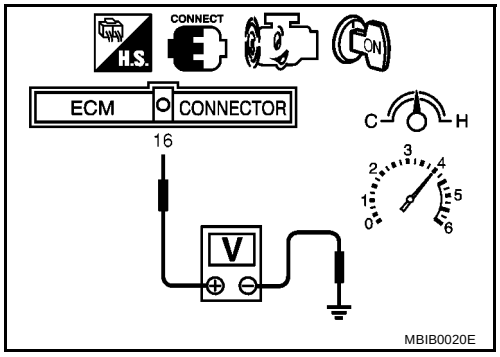

6. Check the voltage when revving up to 4,000 rpm under no load at least 10 times.
   (Depress and release accelerator pedal as soon as possible.)
   The voltage should be below 0.52V at least once during this procedure.
   If the voltage can be confirmed in step 6, step 7 is not necessary.
7. Keep vehicle at idling for 10 minutes, then check the voltage. Or check the voltage when coasting from 80 km/h (50 MPH) in 3rd gear position.
   The voltage should be below 0.52V at least once during this procedure.
8. If NG, go to EC-326, "Diagnostic Procedure" .

Wiring Diagram

BBS0030R

EC-HO2S2-01

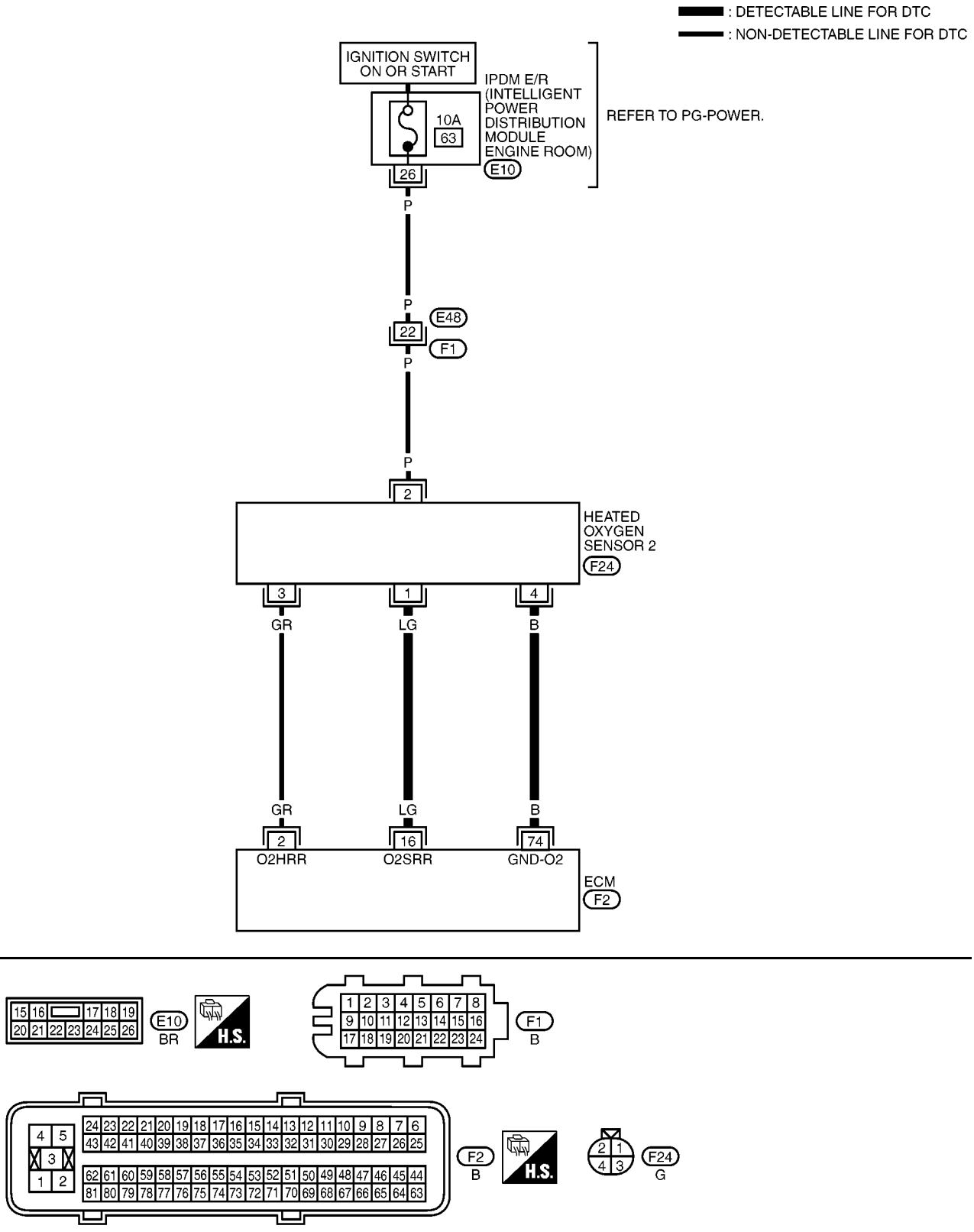

Specification data are reference values and are measured between each terminal and ground.

CAUTION:

Do not use ECM ground terminals when measuring input/output voltage. Doing so may result in damage to the ECM's transistor. Use a ground other than ECM terminals, such as the ground.

TERMINAL NO.	WIRE COLOR	ITEM	CONDITION	DATA (DC Voltage)
2	GR	Heated oxygen sensor 2 heater	**[Engine is running]** ● Engine speed: Below 3,800 rpm after the following conditions are met. – Engine: After warming up – Keeping the engine speed between 3,500 and 4,000 rpm for 1 minute and at idle for 1 minute under no load.	0 - 1.0V
			[Ignition switch: ON] ● Engine stopped **[Engine is running]** ● Engine speed: Above 3,800 rpm	BATTERY VOLTAGE (11 - 14V)
16	LG	Heated oxygen sensor 2	**[Engine is running]** ● Revving engine from idle to 3,000rpm quickly after the following conditions are met. – Engine: After warming up – Keeping the engine speed between 3,500 and 4,000 rpm for 1 minute and at idle for 1 minute under no load.	0 - Approximately 1.0V
74	B	Sensor ground (Heated oxygen sensor)	**[Engine is running]** ● **Warm-up condition** ● Idle speed	Approximately 0V

Diagnostic Procedure

BBS0030S

1. CHECK GROUND CONNECTIONS

1. Turn ignition switch OFF.
2. Loosen and retighten ground screws on the body.
   Refer to EC-133, "Ground Inspection" .

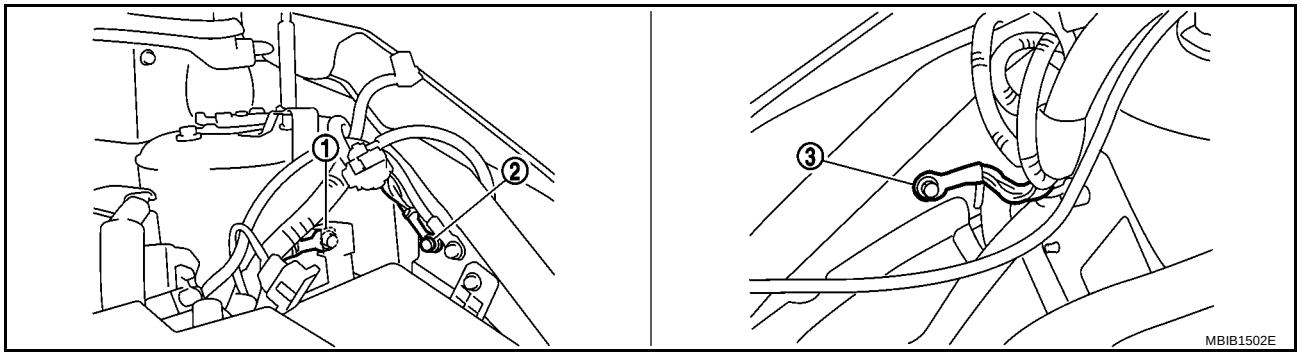

1. Body ground E44
2. Body ground E45
3. Body ground E28

OK or NG

OK >> GO TO 2.
NG >> Repair or replace ground connections.

2. CLEAR THE SELF-LEARNING DATA

With CONSULT-II

1. Start engine and warm it up to normal operating temperature.
2. Select “SELF-LEARNING CONT” in “WORK SUPPORT” mode with CONSULT-II.
3. Clear the self-learning control coefficient by touching “CLEAR”.
4. Run engine for at least 10 minutes at idle speed.
   Is the 1st trip DTC P0172 detected?
   Is it difficult to start engine?

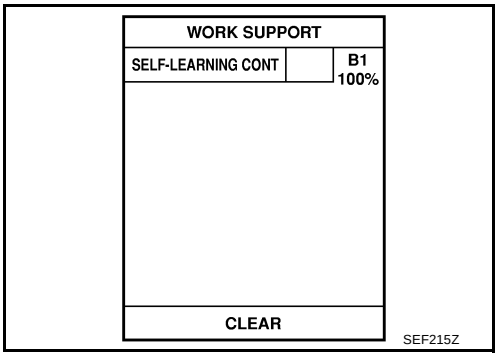

Without CONSULT-II

1. Start engine and warm it up to normal operating temperature.
2. Turn ignition switch OFF.
3. Disconnect manifold absolute pressure sensor harness connector, and restart and run engine for at least 5 seconds at idle speed.
4. Stop engine and reconnect manifold absolute pressure sensor harness connector.
5. Make sure that DTC P0107 is displayed.
6. Erase the DTC memory. Refer to EC-57, "HOW TO ERASE EMISSION-RELATED DIAGNOSTIC INFORMATION" .
7. Make sure that DTC P0000 is displayed.
8. Run engine for at least 10 minutes at idle speed.
   Is the 1st trip DTC P0172 detected?
   Is it difficult to start engine?

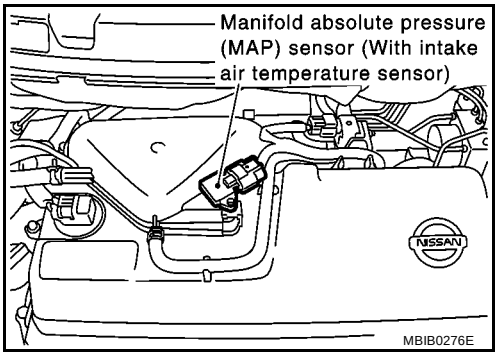

Yes or No

Yes >> Perform trouble diagnosis for DTC P0172. Refer to EC-226 .
No >> GO TO 3.

3. CHECK HO2S2 GROUND CIRCUIT FOR OPEN AND SHORT

1. Turn ignition switch OFF.
2. Disconnect heated oxygen sensor 2 harness connector.
3. Disconnect ECM harness connector.
4. Check harness continuity between ECM terminal 74 and HO2S2 terminal 4.
   Refer to Wiring Diagram.

   Continuity should exist.

5. Also check harness for short to ground and short to power.

OK or NG

OK >> GO TO 4.
NG >> Repair open circuit or short to ground or short to power in harness or connectors.

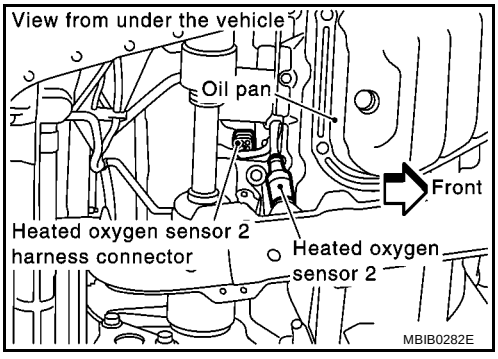

4. CHECK HO2S2 INPUT SIGNAL CIRCUIT FOR OPEN AND SHORT

1. Check harness continuity between ECM terminal 16 and HO2S2 terminal 1.
   Refer to Wiring Diagram.

   Continuity should exist.

2. Check harness continuity between ECM terminal 16 or HO2S2 terminal 1 and ground.
   Refer to Wiring Diagram.

   Continuity should not exist.

3. Also check harness for short to power.

OK or NG

OK >> GO TO 5.
NG >> Repair open circuit or short to ground or short to power in harness or connectors.

5. CHECK HEATED OXYGEN SENSOR 2

Refer to EC-328, "Component Inspection" .

OK or NG

OK >> GO TO 6.
NG >> Replace heated oxygen sensor 2.

6. CHECK INTERMITTENT INCIDENT

Refer to EC-127, "TROUBLE DIAGNOSIS FOR INTERMITTENT INCIDENT" .

>> **INSPECTION END**

Component Inspection

BBS0030T

HEATED OXYGEN SENSOR 2

With CONSULT-II

1. Turn ignition switch ON and select “DATA MONITOR” mode with CONSULT-II.
2. Start engine and warm it up to the normal operating temperature.
3. Turn ignition switch OFF and wait at least 10 seconds.
4. Start engine and keep the engine speed between 3,500 and 4,000 rpm for at least 1 minute under no load.
5. Let engine idle for 1 minute.

DATA MONITOR	
MONITOR	NO DTC
ENG SPEED	XXX rpm
COOLAN TEMP/S	XXX °C

SEF174Y

6. Select “FUEL INJECTION” in “ACTIVE TEST” mode, and select “HO2S2 (B1)” as the monitor item with CONSULT-II.

ACTIVE TEST	
FUEL INJECTION	25 %
MONITOR	
ENG SPEED	XXX rpm
HO2S1 (B1)	XXX V
HO2S2 (B1)	XXX V
HO2S1 MNTR (B1)	RICH
HO2S2 MNTR (B1)	RICH

SEF662Y

7. Check “HO2S2 (B1)” at idle speed when adjusting “FUEL INJECTION” to ±25%.

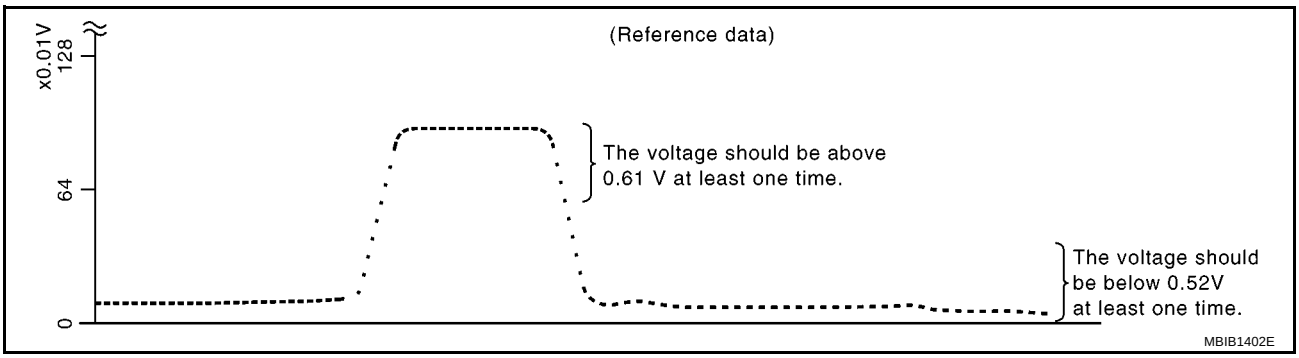

“HO2S2 (B1)” should be above 0.61V at least once when the “FUEL INJECTION” is +25%.
“HO2S2 (B1)” should be below 0.52V at least once when the “FUEL INJECTION” is –25%.

CAUTION:

- **Discard any heated oxygen sensor which has been dropped from a height of more than 0.5 m (19.7 in) onto a hard surface such as a concrete floor; use a new one.**
- **Before installing new oxygen sensor, clean exhaust system threads using Oxygen Sensor Thread Cleaner and approved anti-seize lubricant.**

Without CONSULT-II

1. Start engine and warm it up to the normal operating temperature.
2. Turn ignition switch OFF and wait at least 10 seconds.
3. Start engine and keep the engine speed between 3,500 and 4,000 rpm for at least 1 minute under no load.
4. Let engine idle for 1 minute.
5. Set voltmeter probes between ECM terminal 16 (HO2S2 signal) and ground.
6. Check the voltage when revving up to 4,000 rpm under no load at least 10 times.
   (Depress and release accelerator pedal as soon as possible.)
   The voltage should be above 0.61V at least once during this procedure.
   If the voltage is above 0.61V at step 6, step 7 is not necessary.

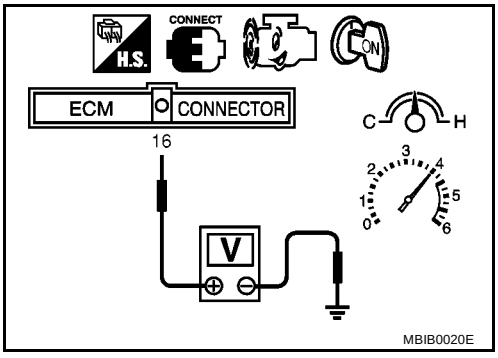

7. Keep vehicle at idling for 10 minutes, then check voltage. Or check the voltage when coasting from 80 km/h (50 MPH) in 3rd gear position.
   The voltage should be below 0.52V at least once during this procedure.
8. If NG, replace heated oxygen sensor 2.

CAUTION:

- **Discard any heated oxygen sensor which has been dropped from a height of more than 0.5 m (19.7 in) onto a hard surface such as a concrete floor; use a new one.**
- **Before installing new oxygen sensor, clean exhaust system threads using Oxygen Sensor Thread Cleaner and approved anti-seize lubricant.**

Removal and Installation

BBS0030U

HEATED OXYGEN SENSOR 2

Refer to EX-3, "EXHAUST SYSTEM" .

DTC P1147 HO2S2

PFP:226A0

Component Description

BBS0030V

The heated oxygen sensor 2, after three way catalyst (manifold), monitors the oxygen level in the exhaust gas on each bank.
Even if switching characteristics of the heated oxygen sensor 1 are shifted, the air-fuel ratio is controlled to stoichiometric, by the signal from the heated oxygen sensor 2.
This sensor is made of ceramic zirconia. The zirconia generates voltage from approximately 1V in richer conditions to 0V in leaner conditions.
Under normal conditions the heated oxygen sensor 2 is not used for engine control operation.

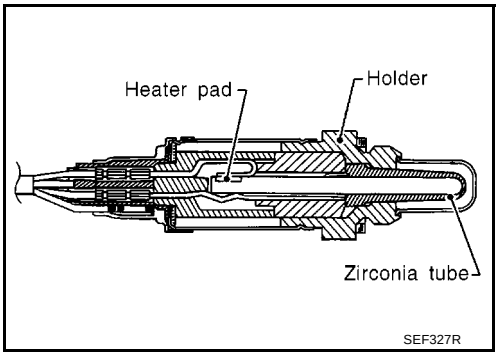

CONSULT-II Reference Value in Data Monitor Mode

BBS0030W

Specification data are reference values.

MONITOR ITEM	CONDITION	SPECIFICATION
HO2S2 (B1)	● Revving engine from idle to 3,000 rpm quickly after the following conditions are met. – Engine: After warming up – Keeping the engine speed between 3,500 and 4,000 rpm for 1 minute and at idle for 1 minute under no load.	0 - 0.3V ←→ Approx. 0.6 - 1.0V
HO2S2 MNTR (B1)		LEAN ←→ RICH

On Board Diagnosis Logic

BBS0030X

The heated oxygen sensor 2 has a much longer switching time between rich and lean than the heated oxygen sensor 1. The oxygen storage capacity of the three way catalyst (manifold) causes the longer switching time. To judge the malfunctions of heated oxygen sensor 2, ECM monitors whether the maximum voltage of the sensor is sufficiently high during the various driving condition such as fuel-cut.

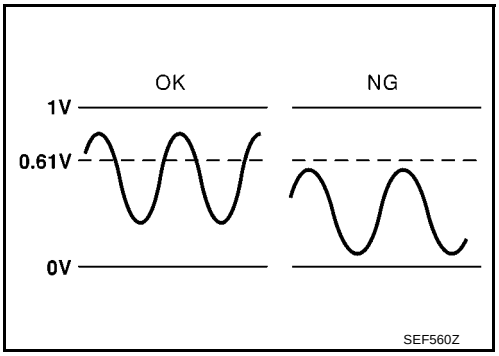

DTC No.	Trouble diagnosis name	DTC detecting condition	Possible cause
P1147 1147	Heated oxygen sensor 2 maximum voltage monitoring	The maximum voltage from the sensor is not reached to the specified voltage.	● Harness or connectors (The sensor circuit open or shorted.) ● Heated oxygen sensor 2 ● Fuel pressure ● Fuel injector ● Intake air leak

DTC Confirmation Procedure

BBS0030Y

CAUTION:
Always drive vehicle at a safe speed.

NOTE:
- **"COMPLETED" will appear on CONSULT-II screen when all tests "COND1", "COND2" and "COND3" are completed.**
- If DTC confirmation Procedure has been previously conducted, always turn ignition switch OFF and wait at least 10 seconds before conducting the next test.

TESTING CONDITION:
Never stop engine during this procedure. If the engine is stopped, retry procedure from step 2 in Procedure for COND1.

WITH CONSULT-II

Procedure for COND1

For the best results, perform "DTC WORK SUPPORT" at a temperature of 0 to 30°C(32 to 86°F).

1. Start engine and warm it up to normal operating temperature.
2. Turn ignition switch OFF and wait at least 10 seconds.
3. Start engine and keep the engine speed between 3,500 and 4,000 rpm for at least 1 minute under no load.
4. Let engine idle 1 minute.
5. Select "HO2S2 (B1) P1147" of "HO2S2" in "DTC WORK SUPPORT" mode with CONSULT-II.
6. Touch "START".
7. Start engine and let it idle for at least 30 seconds.
8. Rev engine up to 2,000 rpm 2 or 3 times quickly under no load.
   If "COMPLETED" appears on CONSULT-II screen, go to step 2 in Procedure for COND3.
   If "COMPLETED" does not appear on CONSULT-II screen, go to the following step.
9. When the following conditions are met, "TESTING" will be displayed at "COND1" on the CONSULT-II screen. Maintain the conditions continuously until "TESTING" changes to "COMPLETED". (It will take approximately 60 seconds.)

ENG SPEED	More than 1,500 rpm
B/FUEL SCHDL	More than 1.0 msec
COOLAN TEMP/S	70 - 105°C
Shift lever	Suitable position

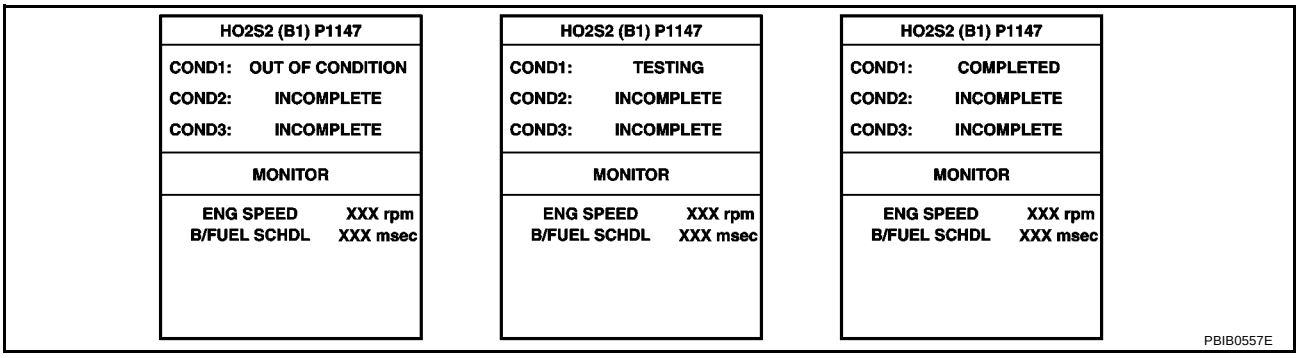

NOTE:
- **If "TESTING" is not displayed after 5 minutes, retry from step 2 in Procedure for COND1.**
- **If "COMPLETED" already appears at "COND2" on CONSULT-II screen before Procedure for COND2 is conducted, it is unnecessary to conduct step 1 in Procedure for COND2.**

Procedure for COND2

1. While driving, release accelerator pedal completed from the above condition [step 9] until “INCOMPLETE” at “COND2” on CONSULT-II screen has turned to “COMPLETED” (It will take approximately 4 seconds.)

   NOTE:
   If “COMPLETE” already appears at “COND3” on CONSULT-II screen before Procedure for COND3 is conducted, it is unnecessary to conduct step 1 in Procedure for COND3.

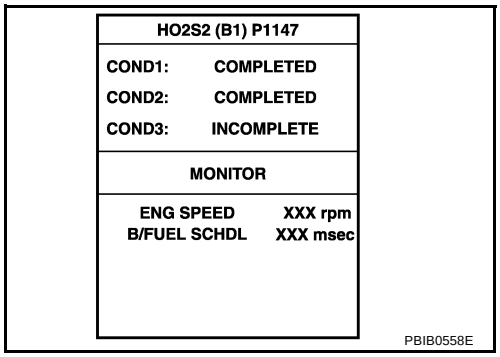

Procedure for COND3

1. Stop vehicle and let it idle until “INCOMPLETE” of “COND3” on CONSULT-II screen has turned to “COMPLETED”. (It will take a maximum of approximately 6 minutes.)
2. Make sure that “OK” is displayed after touching “SELF-DIAG RESULTS”.
   If “NG” is displayed, refer to EC-334, "Diagnostic Procedure" .
   If “CAN NOT BE DIAGNOSED” is displayed, perform the following.

a. Turn ignition switch OFF and leave the vehicle in a cool place (soak the vehicle).
b. Turn ignition switch ON and select “COOLAN TEMP/S” in “DATA MONITOR” mode with CONSULT-II.
c. Start engine and warm it up while monitoring “COOLAN TEMP/S” indication on CONSULT-II.
d. When “COOLAN TEMP/S” indication reaches to 70°C(158°F), go to procedure for COND1 step 3.

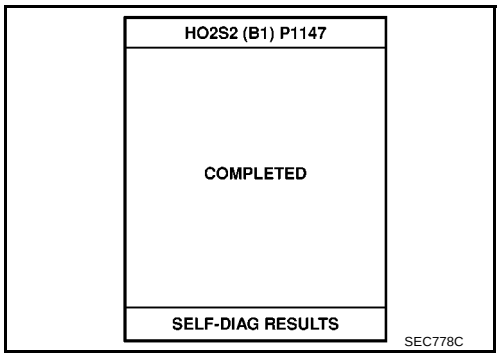

Overall Function Check

BBS0030Z

Use this procedure to check the overall function of the heated oxygen sensor 2 circuit. During this check, a 1st trip DTC might not be confirmed.

WITH GST

1. Start engine and warm it up to the normal operating temperature.
2. Turn ignition switch OFF and wait at least 10 seconds.
3. Start engine and keep the engine speed between 3,500 and 4,000 rpm for at least 1 minute under no load.
4. Let engine idle for 1 minute.
5. Set voltmeter probes between ECM terminal 16 (HO2S2 signal) and ground.
6. Check the voltage when revving up to 4,000 rpm under no load at least 10 times.
   (Depress and release accelerator pedal as soon as possible.)
   The voltage should be above 0.61V at least once during this procedure.
   If the voltage can be confirmed in step 6, step 7 is not necessary.
7. Keep vehicle idling for 10 minutes, then check the voltage. Or check the voltage when coasting from 80 km/h (50 MPH) in 3rd gear position.
   The voltage should be above 0.61V at least once during this procedure.
8. If NG, go to EC-334, "Diagnostic Procedure" .

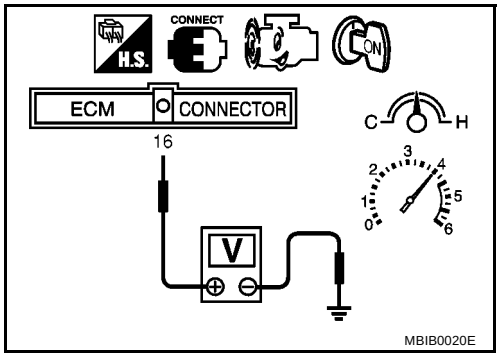

Wiring Diagram

BBS00310

EC-HO2S2-01

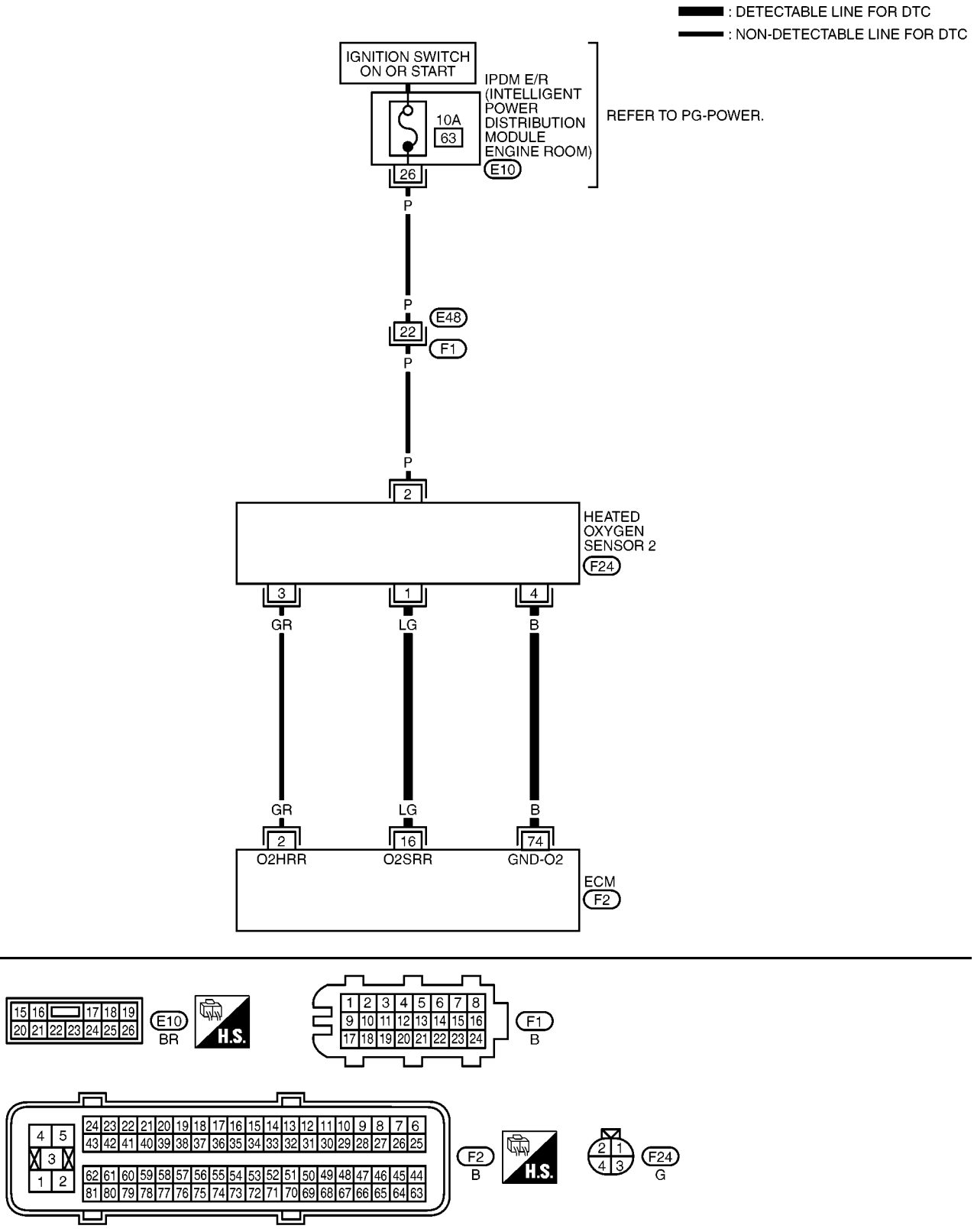

MBWA1511E

Specification data are reference values and are measured between each terminal and ground.

CAUTION:

Do not use ECM ground terminals when measuring input/output voltage. Doing so may result in damage to the ECM's transistor. Use a ground other than ECM terminals, such as the ground.

TERMINAL NO.	WIRE COLOR	ITEM	CONDITION	DATA (DC Voltage)
2	GR	Heated oxygen sensor 2 heater	**[Engine is running]** ● Engine speed: Below 3,800 rpm after the following conditions are met. – Engine: After warming up – Keeping the engine speed between 3,500 and 4,000 rpm for 1 minute and at idle for 1 minute under no load.	0 - 1.0V
			[Ignition switch: ON] ● Engine stopped **[Engine is running]** ● Engine speed: Above 3,800 rpm	BATTERY VOLTAGE (11 - 14V)
16	LG	Heated oxygen sensor 2	**[Engine is running]** ● Revving engine from idle to 3,000rpm quickly after the following conditions are met. – Engine: After warming up – Keeping the engine speed between 3,500 and 4,000 rpm for 1 minute and at idle for 1 minute under no load.	0 - Approximately 1.0V
74	B	Sensor ground (Heated oxygen sensor)	**[Engine is running]** ● **Warm-up condition** ● Idle speed	Approximately 0V

Diagnostic Procedure

BBS00311

1. CHECK GROUND CONNECTIONS

1. Turn ignition switch OFF.
2. Loosen and retighten ground screws on the body.
   Refer to EC-133, "Ground Inspection" .

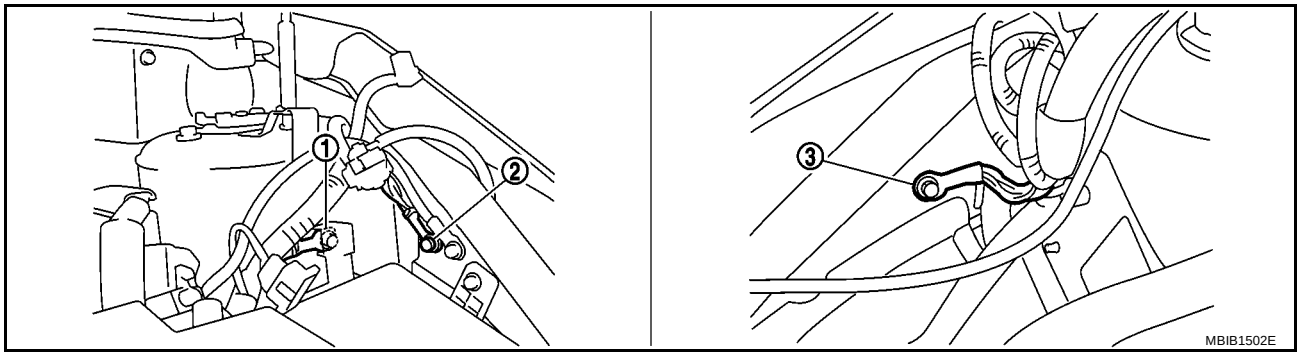

1. Body ground E44
2. Body ground E45
3. Body ground E28

OK or NG

OK >> GO TO 2.
NG >> Repair or replace ground connections.

2. CLEAR THE SELF-LEARNING DATA

With CONSULT-II

1. Start engine and warm it up to normal operating temperature.
2. Select “SELF-LEARNING CONT” in “WORK SUPPORT” mode with CONSULT-II.
3. Clear the self-learning control coefficient by touching “CLEAR”.
4. Run engine for at least 10 minutes at idle speed.
   Is the 1st trip DTC P0171 detected?
   Is it difficult to start engine?

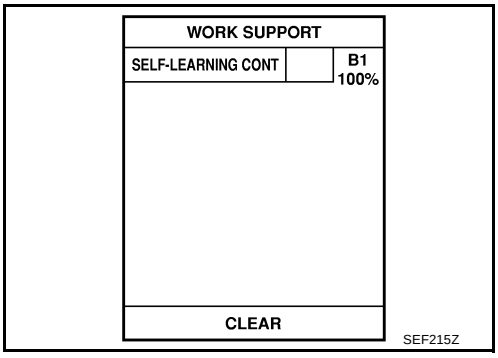

Without CONSULT-II

1. Start engine and warm it up to normal operating temperature.
2. Turn ignition switch OFF.
3. Disconnect manifold absolute pressure sensor harness connector, and restart and run engine for at least 5 seconds at idle speed.
4. Stop engine and reconnect manifold absolute pressure sensor harness connector.
5. Make sure that DTC P0107 is displayed.
6. Erase the DTC memory. Refer to EC-57, "HOW TO ERASE EMISSION-RELATED DIAGNOSTIC INFORMATION" .
7. Make sure that DTC P0000 is displayed.
8. Run engine for at least 10 minutes at idle speed.
   Is the 1st trip DTC P0171 detected?
   Is it difficult to start engine?

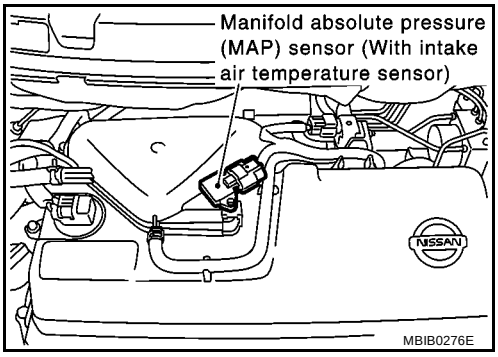

Yes or No

Yes >> Perform trouble diagnosis for DTC P0171. Refer to EC-218 .
No >> GO TO 3.

3. CHECK HO2S2 GROUND CIRCUIT FOR OPEN AND SHORT

1. Turn ignition switch OFF.
2. Disconnect heated oxygen sensor 2 harness connector.
3. Disconnect ECM harness connector.
4. Check harness continuity between ECM terminal 74 and HO2S2 terminal 4.
   Refer to Wiring Diagram.

   Continuity should exist.

5. Also check harness for short to ground and short to power.

OK or NG

OK >> GO TO 4.
NG >> Repair open circuit or short to ground or short to power in harness or connectors.

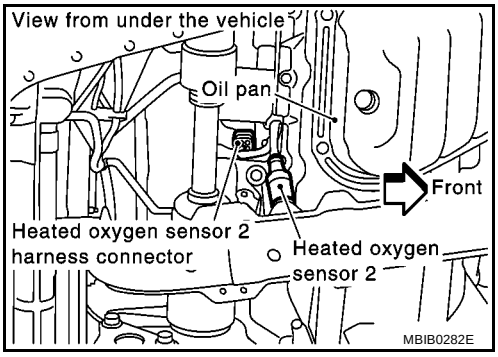

4. CHECK HO2S2 INPUT SIGNAL CIRCUIT FOR OPEN AND SHORT

1. Check harness continuity between ECM terminal 16 and HO2S2 terminal 1.
   Refer to Wiring Diagram.

   Continuity should exist.

2. Check harness continuity between ECM terminal 16 or HO2S2 terminal 1 and ground.
   Refer to Wiring Diagram.

   Continuity should not exist.

3. Also check harness for short to power.

OK or NG

OK >> GO TO 5.
NG >> Repair open circuit or short to ground or short to power in harness or connectors.

5. CHECK HEATED OXYGEN SENSOR 2

Refer to EC-336, "Component Inspection" .

OK or NG

OK >> GO TO 6.
NG >> Replace heated oxygen sensor 2.

6. CHECK INTERMITTENT INCIDENT

Refer to EC-127, "TROUBLE DIAGNOSIS FOR INTERMITTENT INCIDENT" .

>> **INSPECTION END**

Component Inspection

BBS00312

HEATED OXYGEN SENSOR 2

With CONSULT-II

1. Turn ignition switch ON and select “DATA MONITOR” mode with CONSULT-II.
2. Start engine and warm it up to the normal operating temperature.
3. Turn ignition switch OFF and wait at least 10 seconds.
4. Start engine and keep the engine speed between 3,500 and 4,000 rpm for at least 1 minute under no load.
5. Let engine idle for 1 minute.

DATA MONITOR	
MONITOR	NO DTC
ENG SPEED	XXX rpm
COOLAN TEMP/S	XXX °C

SEF174Y

6. Select “FUEL INJECTION” in “ACTIVE TEST” mode, and select “HO2S2 (B1)” as the monitor item with CONSULT-II.

ACTIVE TEST	
FUEL INJECTION	25 %
MONITOR	
ENG SPEED	XXX rpm
HO2S1 (B1)	XXX V
HO2S2 (B1)	XXX V
HO2S1 MNTR (B1)	RICH
HO2S2 MNTR (B1)	RICH

SEF662Y

7. Check “HO2S2 (B1)” at idle speed when adjusting “FUEL INJECTION” to ±25%.

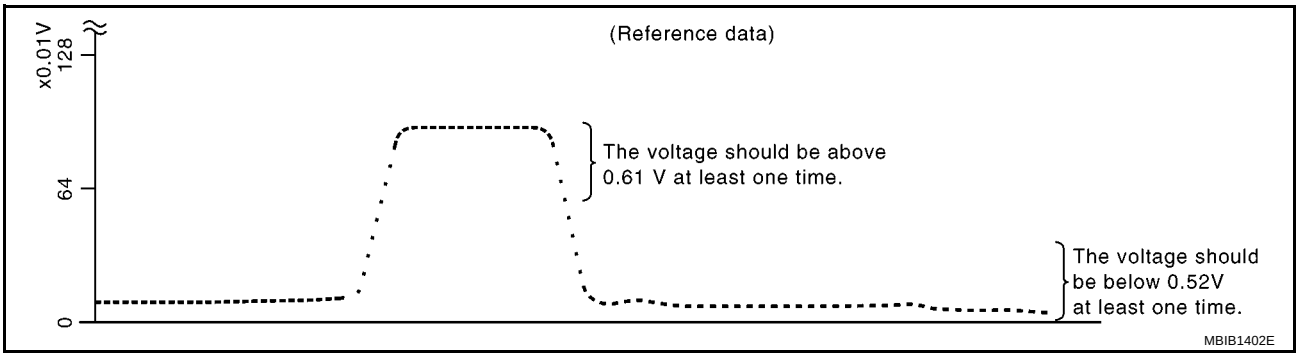

“HO2S2 (B1)” should be above 0.61V at least once when the “FUEL INJECTION” is +25%.
“HO2S2 (B1)” should be below 0.52V at least once when the “FUEL INJECTION” is –25%.

CAUTION:

- **Discard any heated oxygen sensor which has been dropped from a height of more than 0.5 m (19.7 in) onto a hard surface such as a concrete floor; use a new one.**
- **Before installing new oxygen sensor, clean exhaust system threads using Oxygen Sensor Thread Cleaner and approved anti-seize lubricant.**

Without CONSULT-II

1. Start engine and warm it up to the normal operating temperature.
2. Turn ignition switch OFF and wait at least 10 seconds.
3. Start engine and keep the engine speed between 3,500 and 4,000 rpm for at least 1 minute under no load.
4. Let engine idle for 1 minute.
5. Set voltmeter probes between ECM terminal 16 (HO2S2 signal) and ground.
6. Check the voltage when revving up to 4,000 rpm under no load at least 10 times.
   (Depress and release accelerator pedal as soon as possible.)
   The voltage should be above 0.61V at least once during this procedure.
   If the voltage is above 0.61V at step 6, step 7 is not necessary.

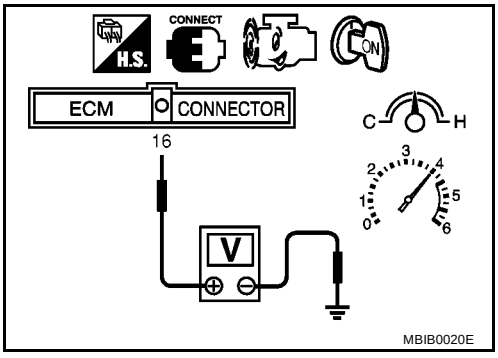

7. Keep vehicle idling for 10 minutes, then check voltage. Or check the voltage when coasting from 80 km/h (50 MPH) in 3rd gear position.
   The voltage should be below 0.52V at least once during this procedure.
8. If NG, replace heated oxygen sensor 2.

CAUTION:

- **Discard any heated oxygen sensor which has been dropped from a height of more than 0.5 m (19.7 in) onto a hard surface such as a concrete floor; use a new one.**
- **Before installing new oxygen sensor, clean exhaust system threads using Oxygen Sensor Thread Cleaner and approved anti-seize lubricant.**

Removal and Installation

BBS00313

HEATED OXYGEN SENSOR 2

Refer to EX-3, "EXHAUST SYSTEM" .

DTC P1171 INTAKE ERROR

PFP:22365

On Board Diagnosis Logic

BBS00314

NOTE:

- **If DTC P1171 is displayed with DTC P0108, first perform the trouble diagnosis for DTC P0108. Refer to EC-155, "DTC P0107, P0108 MANIFOLD ABSOLUTE PRESSURE SENSOR"**
- **If DTC P1171 is displayed with DTC P1229, first perform the trouble diagnosis for DTC P1229. Refer to EC-363, "DTC P1229 SENSOR POWER SUPPLY" .**

ECM computes two intake air volume values.
1: Computed from manifold absolute pressure signal and intake air temperature signal.
2: Computed from engine revolution signal and throttle position signal.

In normal condition, value 1 is used for engine control.
If intake air leak occurred between throttle valve and intake air port, manifold absolute pressure sensor signal might increase, and then ECM increases amount of fuel injected. In this case, ECM uses value 2 for engine control instead of value1.
ECM monitors the difference between value 1 and value 2. If the difference is extremely large, ECM judges intake air leak occurs and light up the MI

This diagnosis has one trip detection logic.

DTC No.	Trouble diagnosis name	DTC detecting condition	Possible cause
P1171 1171	Intake error	A high voltage from the sensor is sent to ECM under light load driving condition.	● Harness or connectors (The manifold absolute pressure sensor circuit is open or shorted.) ● Manifold absolute pressure ● Intake air leaks ● Vacuum hoses

FAIL-SAFE MODE

When the malfunction is detected, the ECM enters fail-safe mode and MI lights up.

Detected items	Engine operating condition in fail-safe mode
Intake air system	When accelerator pedal is depressed, engine speed will not rise more than 2,500 rpm due to fuel cut.

DTC Confirmation Procedure

BBS00315

NOTE:
If DTC Confirmation Procedure has been previously conducted, always turn ignition switch OFF and wait at least 10 seconds before conducting the next test.

WITH CONSULT-II

1. Turn ignition switch ON.
2. Select “DATA MONITOR” mode with CONSULT-II.
3. Start engine and wait at least 5 seconds.
4. If DTC is detected, go to EC-340, "Diagnostic Procedure" .

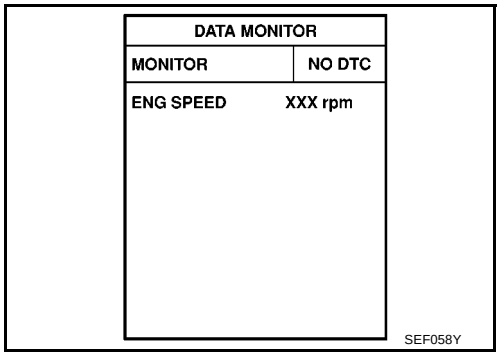

WITH GST

Follow the procedure “WITH CONSULT-II” above.

Wiring Diagram

BBS00316

EC-AP/SEN-01

: DETECTABLE LINE FOR DTC
: NON-DETECTABLE LINE FOR DTC

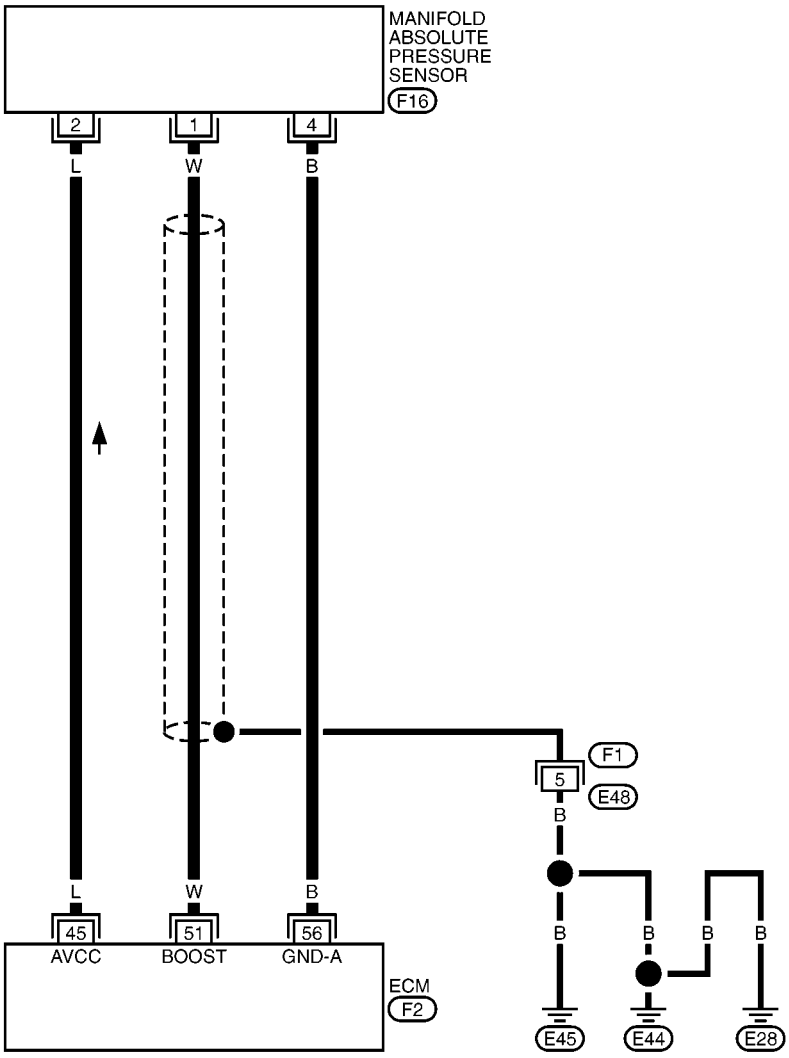

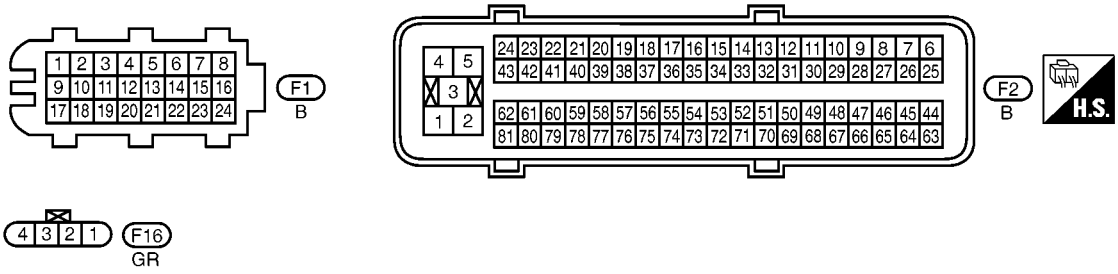

MBWA1506E

Specification data are reference values and are measured between each terminal and ground.

CAUTION:

Do not use ECM ground terminals when measuring input/output voltage. Doing so may result in damage to the ECM's transistor. Use a ground other than ECM terminals, such as the ground.

TERMINAL NO.	WIRE COLOR	ITEM	CONDITION	DATA (DC Voltage)
45	L	Sensor power supply (Manifold absolute pressure sensor)	**[Ignition switch: ON]**	Approximately 5V
51	W	Manifold absolute pressure sensor	**[Engine is running]** ● **Warm-up condition** ● Idle speed	Approximately 1.5V
			[Engine is running] ● **Warm-up condition** ● Engine speed: 2,000 rpm	Approximately 1.2V
56	B	Sensor ground (Manifold absolute pressure sensor)	**[Engine is running]** ● **Warm-up condition** ● Idle speed	Approximately 0V

Diagnostic Procedure

BBS00317

1. CHECK INTAKE AIR LEAK

Listen for an intake air leak after the air cleaner element.

OK or NG

OK >> GO TO 2.
NG >> Repair or replace.

2. CHECK VACUUM HOSE

1. Check intake manifold vacuum hoses for clogging or disconnection. Refer to EC-92, "Vacuum Hose Drawing" .

OK or NG

OK >> GO TO 3.
NG >> Repair or replace.

3. CHECK GROUND CONNECTIONS

1. Turn ignition switch OFF.
2. Loosen and retighten ground screws on the body.
   Refer to EC-133, "Ground Inspection" .

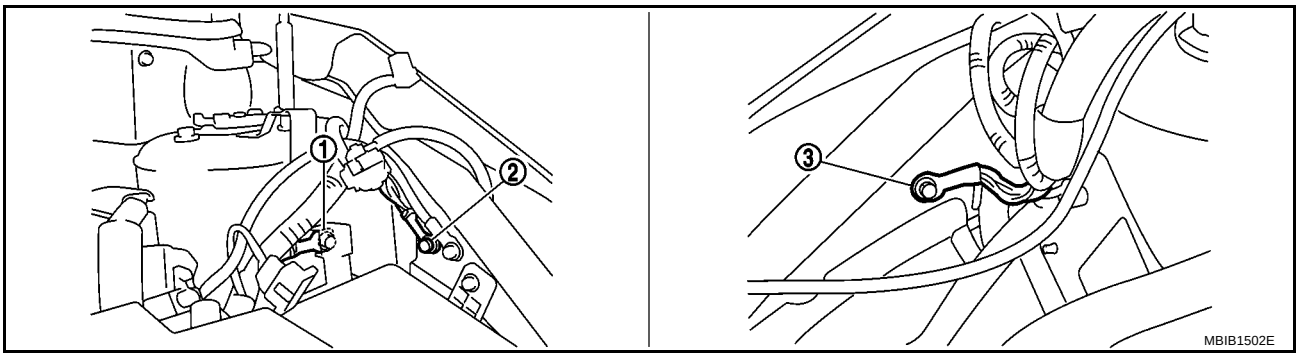

1. Body ground E44
2. Body ground E45
3. Body ground E28

OK or NG

OK >> GO TO 4.
NG >> Repair or replace ground connections.

4. CHECK MAP SENSOR POWER SUPPLY CIRCUIT

1. Disconnect manifold absolute pressure sensor harness connector.
2. Turn ignition switch ON.

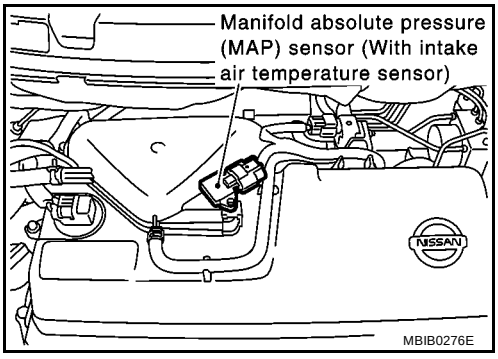

3. Check voltage between manifold absolute pressure sensor terminal 2 and ground with CONSULT-II or tester.

   Voltage: Approximately 5V

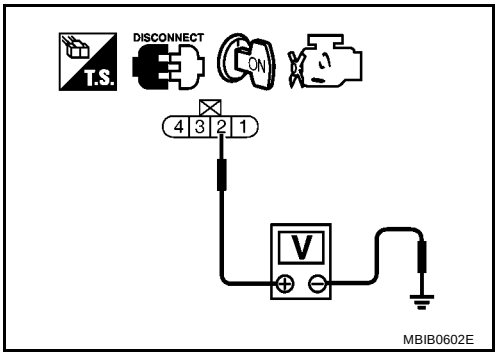

OK or NG

OK >> GO TO 5.
NG >> Repair harness or connectors.

5. CHECK MAP SENSOR GROUND CIRCUIT FOR OPEN AND SHORT

1. Turn ignition switch OFF.
2. Disconnect ECM harness connector.
3. Check harness continuity between manifold absolute pressure sensor terminal 4 and ECM terminal 56. Refer to Wiring Diagram.

   Continuity should exist.

4. Also check harness for short to ground and short to power.

OK or NG

OK >> GO TO 6.
NG >> Repair open circuit or short to ground or short to power in harness or connectors.

6. CHECK MAP SENSOR INPUT SIGNAL CIRCUIT FOR OPEN AND SHORT

1. Check harness continuity between manifold absolute pressure sensor terminal 1 and ECM terminal 51. Refer to Wiring Diagram.

   Continuity should exist.

2. Also check harness for short to ground and short to power.

OK or NG

OK >> GO TO 7.
NG >> Repair open circuit or short to ground or short to power in harness or connectors.

7. CHECK MAP SENSOR

Refer to EC-159, "Component Inspection" .

OK or NG

OK >> GO TO 8.
NG >> Replace manifold absolute pressure sensor.

8. CHECK INTERMITTENT INCIDENT

Refer to EC-127, "TROUBLE DIAGNOSIS FOR INTERMITTENT INCIDENT" .

>> **INSPECTION END**

DTC P1211 TCS CONTROL UNIT

PFP:47850

Description

BBS00318

The malfunction information related to TCS is transferred through the CAN communication line from “ABS actuator and electric unit (control unit)” to ECM.
Be sure to erase the malfunction information such as DTC not only for “ABS actuator and electric unit (control unit)” but also for ECM after TCS related repair.

On Board Diagnosis Logic

BBS00319

Freeze frame data is not stored in the ECM for this self-diagnosis.
The MI will not light up for this self-diagnosis.

DTC No.	Trouble diagnosis name	DTC detecting condition	Possible cause
P1211 1211	TCS control unit	ECM receives a malfunction information from “ABS actuator and electric unit (control unit)”.	● ABS actuator and electric unit (control unit) ● TCS related parts

DTC Confirmation Procedure

BBS0031A

TESTING CONDITION:
Before performing the following procedure, confirm that battery voltage is more than 10.5V at idle.

WITH CONSULT-II

1. Turn ignition switch ON.
2. Select “DATA MONITOR” mode with CONSULT-II.
3. Start engine and let it idle for at least 60 seconds.
4. If 1st trip DTC is detected, go to EC-343, "Diagnostic Procedure"
.

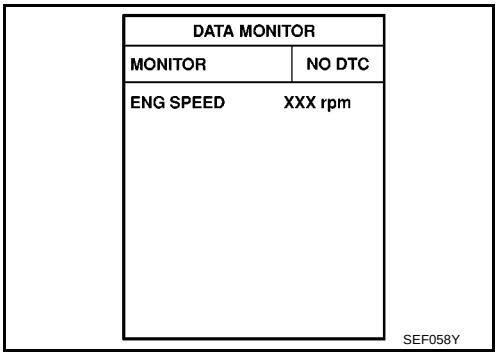

WITH GST

Follow the procedure “WITH CONSULT-II” above.

Diagnostic Procedure

BBS0031B

Go to BRC-49, "TROUBLE DIAGNOSIS" .

DTC P1212 TCS COMMUNICATION LINE

PFP:47850

Description

BBS0031C

NOTE:

- **If DTC P1212 is displayed with DTC U1001, first perform the trouble diagnosis for DTC U1001. Refer to EC-134, "DTC U1001 CAN COMMUNICATION LINE" .**
- **If DTC P1212 is displayed with DTC U1010, first perform the trouble diagnosis for DTC U1010. Refer to EC-137, "DTC U1010 CAN COMMUNICATION" .**

This CAN communication line is used to control the smooth engine operation during the TCS operation. Pulse signals are exchanged between ECM and “ABS actuator and electric unit (control unit)”.
Be sure to erase the malfunction information such as DTC not only for “ABS actuator and electric unit (control unit)” but also for ECM after TCS related repair.

On Board Diagnosis Logic

BBS0031D

The MI will not light up for this self-diagnosis.
Freeze frame data is not stored in the ECM for this self-diagnosis.

DTC No.	Trouble diagnosis name	DTC detecting condition	Possible cause
P1212 1212	TCS communication line	ECM can not receive the information from “ABS actuator and electric unit (control unit)” continuously.	● Harness or connectors (The CAN communication line is open or shorted.) ● ABS actuator and electric unit (control unit). ● Dead (Weak) battery

DTC Confirmation Procedure

BBS0031E

TESTING CONDITION:
Before performing the following procedure, confirm that battery voltage is more than 10.5V at idle.

WITH CONSULT-II

1. Turn ignition switch ON.
2. Select “DATA MONITOR” mode with CONSULT-II.
3. Start engine and let it idle for at least 10 seconds.
4. If 1st trip DTC is detected, go to EC-344, "Diagnostic Procedure" .

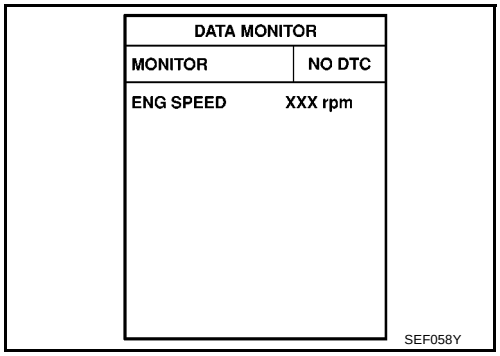

WITH GST

Follow the procedure “WITH CONSULT-II” above.

Diagnostic Procedure

BBS0031F

Refer to BRC-49, "TROUBLE DIAGNOSIS" .

DTC P1217 ENGINE OVER TEMPERATURE

PFP:00000

System Description

BBS0031G

NOTE:

- **If DTC P1217 is displayed with DTC U1001, first perform the trouble diagnosis for DTC U1001. Refer to EC-134, "DTC U1001 CAN COMMUNICATION LINE" .**
- **If DTC P1217 is displayed with DTC U1010, first perform the trouble diagnosis for DTC U1010. Refer to EC-137, "DTC U1010 CAN COMMUNICATION" .**

COOLING FAN CONTROL

Sensor	Input Signal to ECM	ECM Function	Actuator
Crankshaft position sensor (POS) Camshaft position sensor (PHASE)	Engine speed*1	Cooling fan control	IPDM E/R (Cooling fan relay)
Battery	Battery voltage*1		
Wheel sensor	Vehicle speed*2		
Engine coolant temperature sensor	Engine coolant temperature		
Air conditioner switch*3	Air conditioner ON signal*2		
Refrigerant pressure sensor*3	Refrigerant pressure		

*1: ECM determines the start signal status by the signals of engine speed and battery voltage.
*2: This signal is sent to ECM through CAN communication line.
*3: Models with air conditioner.

The ECM controls the cooling fan corresponding to the vehicle speed, engine coolant temperature, refrigerant pressure, and air conditioner ON signal. The control system has 3-step control [HIGH/LOW/OFF] (models with A/C) or 2 step control [ON/OFF] (models without A/C).
The ECM controls cooling fan relays through CAN communication line.

OPERATION

Models with A/C

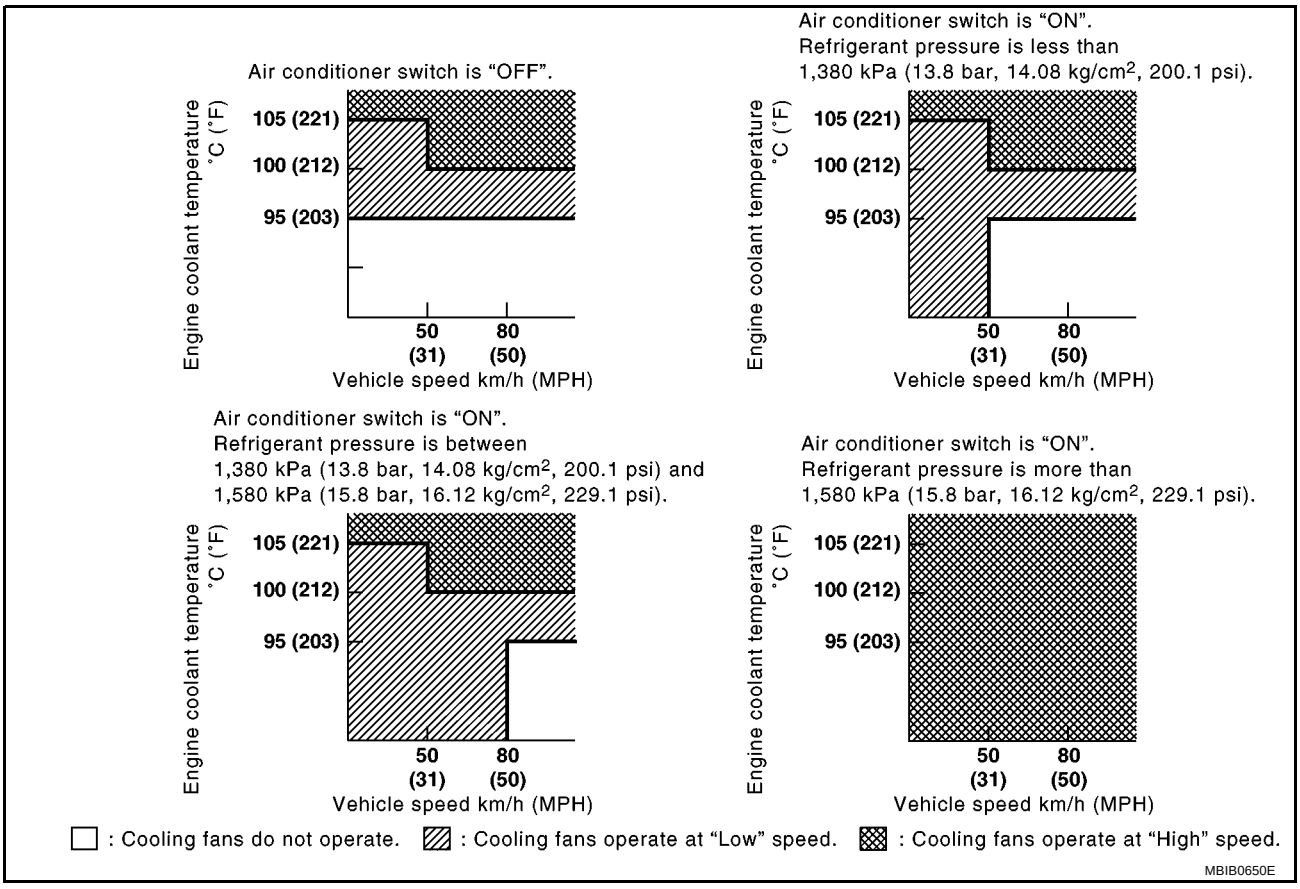

Models without A/C

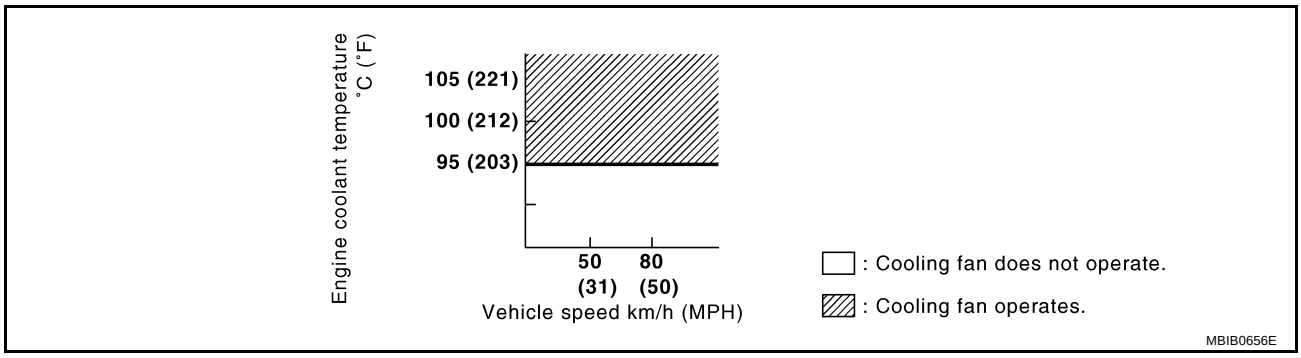

CONSULT-II Reference Value in Data Monitor Mode

BBS0031H

Specification data are reference values.

MONITOR ITEM	CONDITION		SPECIFICATION
AIR COND SIG	● Engine: After warming up, idle the engine	Air conditioner switch: OFF	OFF
		Air conditioner switch: ON (Compressor operates.)	ON
COOLING FAN	● Engine: After warming up, idle the engine ● Air conditioner switch: OFF	Engine coolant temperature: 94°C (201°F) or less	OFF
		Engine coolant temperature: Between 95°C (203°F) and 104°C (210°F)	LOW*
		Engine coolant temperature: 105°C (212°F) or more	HI*

*: Models without air conditioner, cooling fan operates only ON and OFF operation, but CONSULT-II display will change OFF, LOW and HI depends on engine coolant temperature.

On Board Diagnosis Logic

BBS0031I

If the cooling fan or another component in the cooling system malfunctions, engine coolant temperature will rise. When the engine coolant temperature reaches an abnormally high temperature condition, a malfunction is indicated.

This self-diagnosis has the one trip detection logic.

DTC No.	Trouble diagnosis name	DTC detecting condition	Possible cause
P1217 1217	Engine over temperature (Overheat)	● Cooling fan does not operate properly (Overheat). ● Cooling fan system does not operate properly (Overheat). ● Engine coolant was not added to the system using the proper filling method. ● Engine coolant is not within the specified range.	● Harness or connectors (The cooling fan circuit is open or shorted.) ● Cooling fan ● IPDM E/R (Cooling fan relay) ● Radiator hose ● Radiator ● Reservoir tank cap (Models with A/C) ● Radiator cap (Models without A/C) ● Water pump ● Thermostat For more information, refer to EC-357, "Main 12 Causes of Overheating" .

CAUTION:

When a malfunction is indicated, be sure to replace the coolant. Refer to CO-9, "Changing Engine coolant" . Also, replace the engine oil. Refer to LU-7, "Changing Engine Oil" .

1. **Fill radiator with coolant up to specified level with a filling speed of 2 liters per minute. Be sure to use coolant with the proper mixture ratio. Refer to MA-26, "Engine Coolant Mixture Ratio" .**

2. **After refilling coolant, run engine to ensure that no water-flow noise is emitted.**

Overall Function Check

BBS0031J

Use this procedure to check the overall function of the cooling fan. During this check, a DTC might not be confirmed.

WARNING:

Never remove the radiator cap (Models without A/C) or reservoir tank cap (Models with A/C) when the engine is hot. Serious burns could be caused by high pressure fluid escaping from the radiator (Models without A/C) or reservoir tank (Models with A/C).
Wrap a thick cloth around cap. Carefully remove the cap by turning it a quarter turn to allow built-up pressure to escape. Then turn the cap all the way off.

WITH CONSULT-II

1. Check the coolant level in the reservoir tank and radiator.
   Allow engine to cool before checking coolant level.
   If the coolant level in the reservoir tank and/or radiator is below the proper range, skip the following steps and go to EC-351, "Diagnostic Procedure" .
2. Confirm whether customer filled the coolant or not. If customer filled the coolant, skip the following steps and go to EC-351, "Diagnostic Procedure" .
3. Turn ignition switch ON.

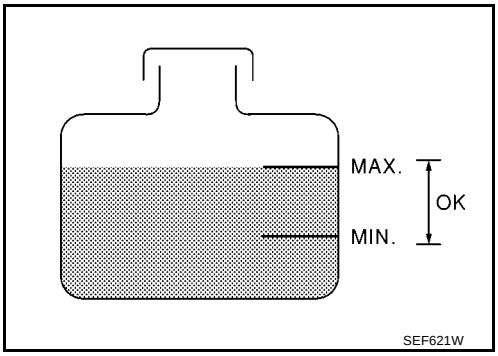

4. Perform “COOLING FAN” in “ACTIVE TEST” mode with CONSULT-II.
5. If the results are NG, go to EC-351, "Diagnostic Procedure" .

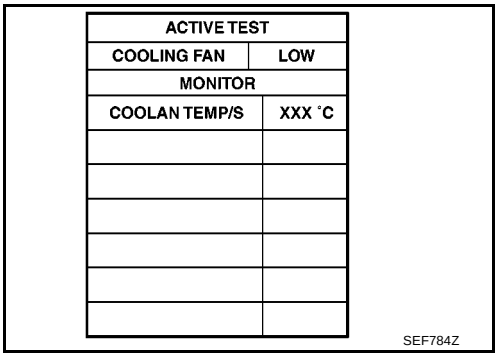

ACTIVE TEST	
COOLING FAN	LOW
MONITOR	
COOLAN TEMP/S	XXX °C

SEF784Z

WITH GST

Models with Air Conditioner

1. Check the coolant level in the reservoir tank and radiator.
   Allow engine to cool before checking coolant level.
   If the coolant level in the reservoir tank and/or radiator is below the proper range, skip the following steps and go to EC-351, "Diagnostic Procedure" .
2. Confirm whether customer filled the coolant or not. If customer filled the coolant, skip the following steps and go to EC-351, "Diagnostic Procedure" .
3. Start engine.
   CAUTION:
   Be careful not to overheat engine.
4. Set temperature control lever to full cold position.
5. Turn air conditioner switch ON.
6. Turn blower fan switch ON.
7. Run engine at idle for a few minutes with air conditioner operating.
   CAUTION:
   Be careful not to overheat engine.

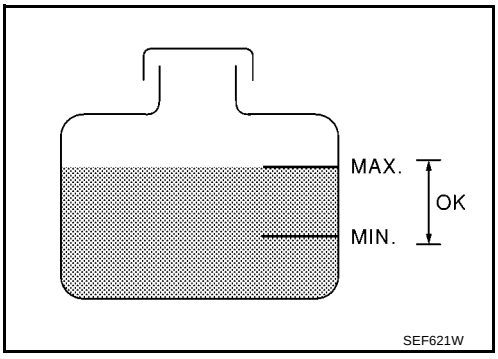

8. Make sure that cooling fans operates at low speed.
   If NG, go to EC-351, "Diagnostic Procedure" .
   If OK, go to the following step.
9. Turn ignition switch OFF.
10. Turn air conditioner switch and blower fan switch OFF.
11. Disconnect engine coolant temperature sensor harness connector.
12. Connect 150Ω resistor to engine coolant temperature sensor harness connector.

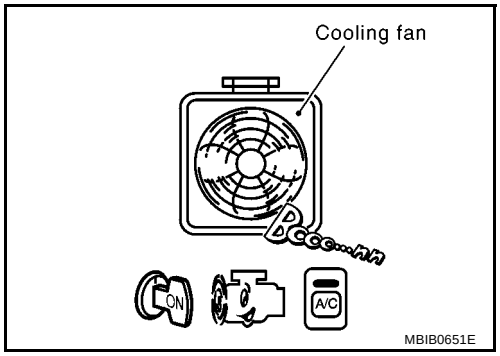

13. Restart engine and make sure that cooling fan operates at higher speed than low speed.
    CAUTION:
    Be careful not to overheat engine.
14. If NG, go to EC-351, "Diagnostic Procedure" .

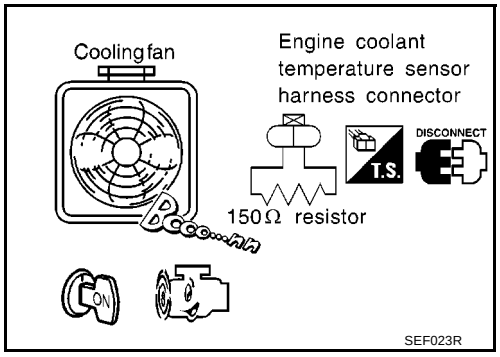

Models without Air Conditioner

1. Check the coolant level in the reservoir tank and radiator.
   Allow engine to cool before checking coolant level.
   If the coolant level in the reservoir tank and/or radiator is below the proper range, skip the following steps and go to EC-351, "Diagnostic Procedure" .
2. Confirm whether customer filled the coolant or not. If customer filled the coolant, skip the following steps and go to EC-351, "Diagnostic Procedure" .
3. Disconnect engine coolant temperature sensor harness connector.
4. Connect 150Ω resistor to engine coolant temperature sensor harness connector.
5. Start engine and make that cooling fan operates. Be careful not to overheat engine.
6. If NG, go to EC-351, "Diagnostic Procedure" .

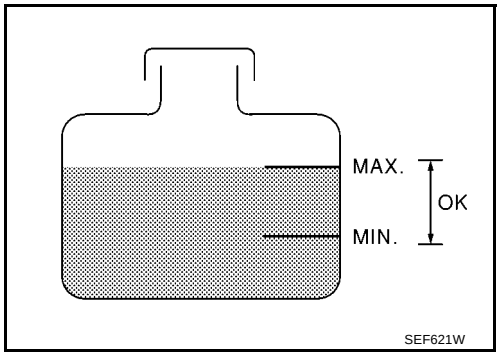

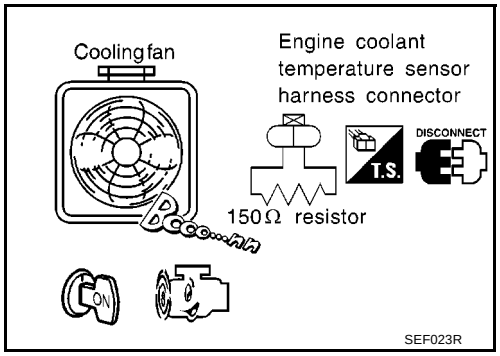

Wiring Diagram
MODELS WITH AIR CONDITIONER

BBS0031K

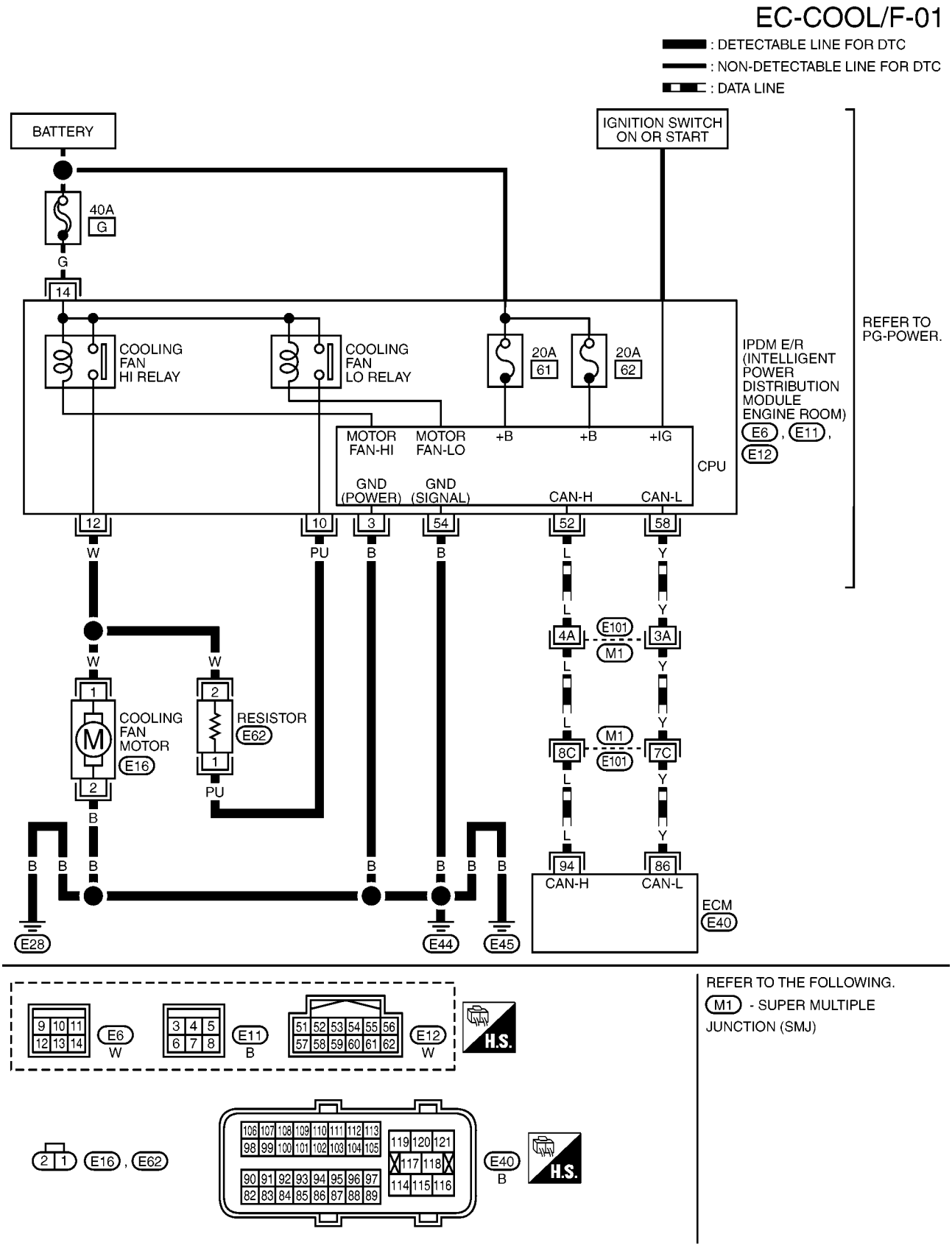

MODELS WITHOUT AIR CONDITIONER

EC-COOL/F-02

: DETECTABLE LINE FOR DTC
: NON-DETECTABLE LINE FOR DTC
: DATA LINE

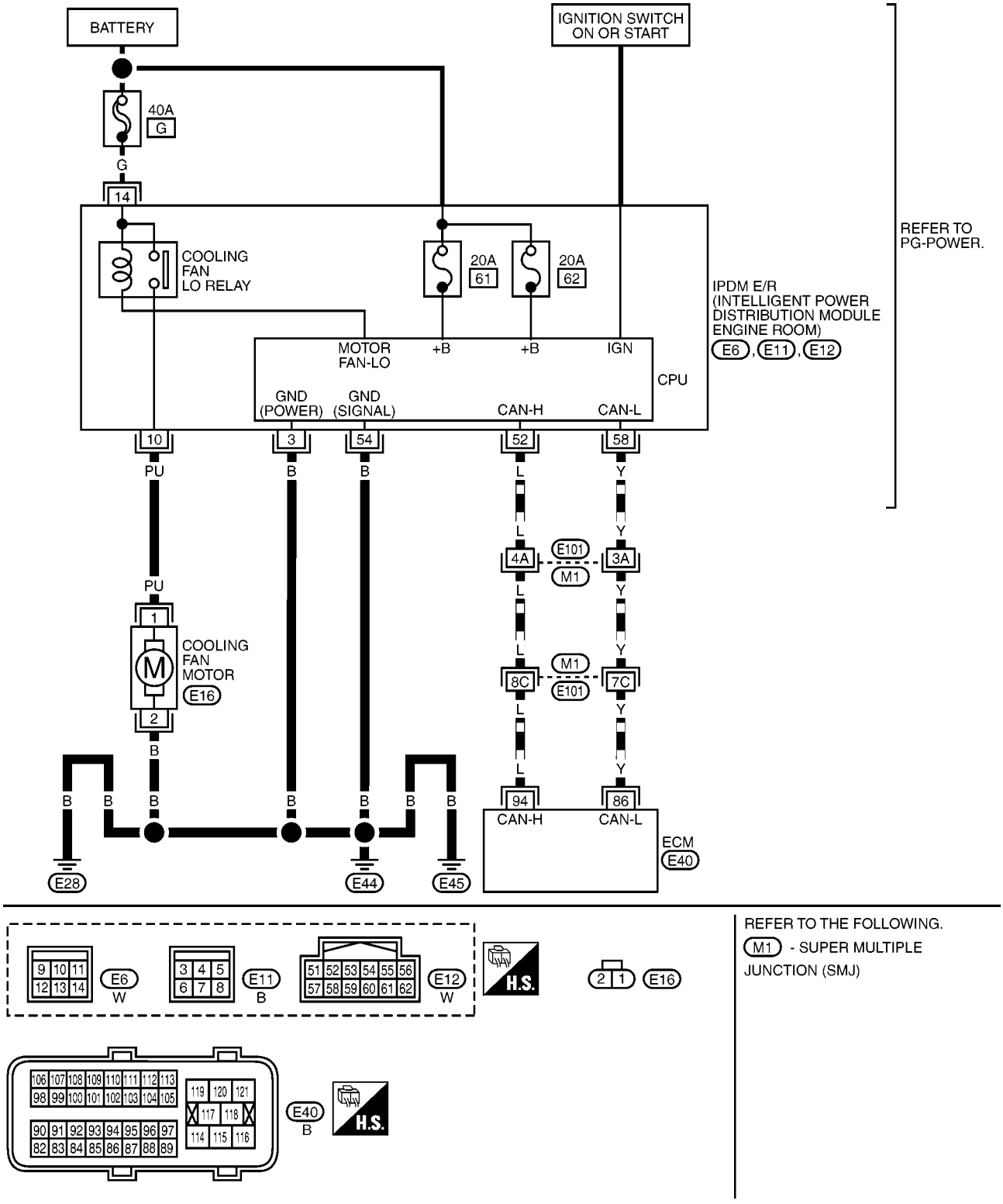

MBWA1524E

Diagnostic Procedure

BBS0031L

PROCEDURE FOR MODELS WITH AIR CONDITIONER

1. INSPECTION START

Do you have CONSULT-II?

Yes or No

Yes >> GO TO 2.
No >> GO TO 4.

2. CHECK COOLING FAN LOW SPEED OPERATION

With CONSULT-II

1. Turn ignition switch ON.
2. Perform “COOLING FAN” in “ACTIVE TEST” mode with CONSULT-II and touch “LOW” on the CONSULT-II screen.
3. Make sure that cooling fan operates at low speed.

OK or NG

OK >> GO TO 3.
NG >> Check cooling fan low speed control circuit. (Go to EC-353, "Procedure A" .)

ACTIVE TEST	
COOLING FAN	LOW
MONITOR	
COOLAN TEMP/S	XXX °C

SEF784Z

3. CHECK COOLING FAN HIGH SPEED OPERATION

With CONSULT-II

1. Touch “HIGH” on the CONSULT-II screen.
2. Make sure that cooling fan operate at higher speed than low speed.

OK or NG

OK >> GO TO 6.
NG >> Check cooling fan high speed control circuit. (Go to EC-354, "Procedure B" .)

ACTIVE TEST	
COOLING FAN	HIGH
MONITOR	
COOLAN TEMP/S	XXX °C

SEF785Z

4. CHECK COOLING FAN LOW SPEED OPERATION

Without CONSULT-II

1. Start engine and let it idle.
2. Turn air conditioner switch ON.
3. Turn blower fan switch ON.
4. Make sure that cooling fan operates at low speed.

OK or NG

OK >> GO TO 5.
NG >> Check cooling fan low speed control circuit. (Go to EC-353, "Procedure A" .)

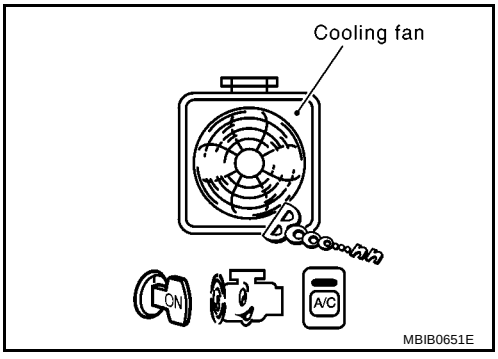

MBIB0651E

5. CHECK COOLING FAN HIGH SPEED OPERATION

Without CONSULT-II

1. Turn ignition switch OFF.
2. Turn air conditioner switch and blower fan switch OFF.
3. Disconnect engine coolant temperature sensor harness connector.
4. Connect 150Ω resistor to engine coolant temperature sensor harness connector.
5. Restart engine and make sure that cooling fan operate at higher speed than low speed.

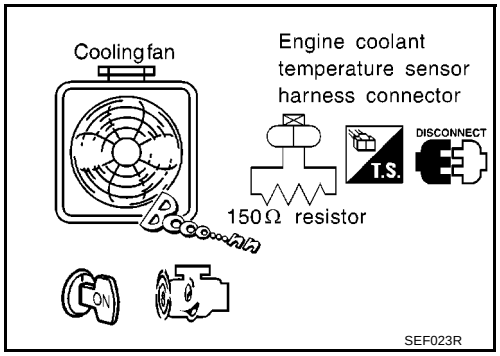

OK or NG

OK >> GO TO 6.
NG >> Check cooling fan high speed control circuit. (Go to EC-354, "Procedure B" .)

6. CHECK COOLING SYSTEM FOR LEAK

Refer to CO-8, "ENGINE COOLANT" .

OK or NG

OK >> GO TO 8.
NG >> GO TO 7.

7. DETECT MALFUNCTIONING PART

Check the following for leak.

- Hose
- Radiator
- Water pump (Refer to CO-17, "WATER PUMP" .)

>> Repair or replace.

8. CHECK RESERVOIR TANK CAP

Refer to CO-16, "Checking Reservoir Tank Cap (Models with A/C)" .

OK or NG

OK >> GO TO 9.
NG >> Replace reservoir tank cap.

9. CHECK COMPONENT PARTS

Check the following.

- Thermostat. Refer to CO-19, "THERMOSTAT" .
- Engine coolant temperature sensor. Refer to EC-170, "Component Inspection" .

OK or NG

OK >> GO TO 10.
NG >> Replace malfunctioning component.

10. CHECK MAIN 12 CAUSES

If the cause cannot be isolated, go to EC-357, "Main 12 Causes of Overheating" .

>> **INSPECTION END**

Procedure A

1. CHECK POWER SUPPLY CIRCUIT

1. Turn ignition switch OFF.
2. Disconnect IPDM E/R harness connector E6.
3. Check voltage between IPDM E/R terminal 14 and ground with CONSULT-II or tester.

Voltage: Battery voltage

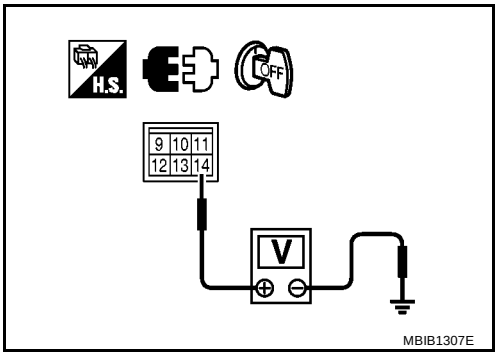

OK or NG

OK >> GO TO 3.
NG >> GO TO 2.

2. DETECT MALFUNCTIONING PART

Check the following.

- 40A fusible link
- Harness for open or short between IPDM E/R and battery

>> Repair open circuit or short to ground or short to power in harness or connectors.

3. CHECK COOLING FAN MOTORS CIRCUIT

1. Disconnect cooling fan motor harness connector.
2. Check harness continuity between cooling fan motor terminal 1 and IPDM E/R terminal 10, cooling fan motor terminal 2 and ground. Refer to Wiring Diagram.

Continuity should exist.

3. Also check harness for short to ground and short to power.

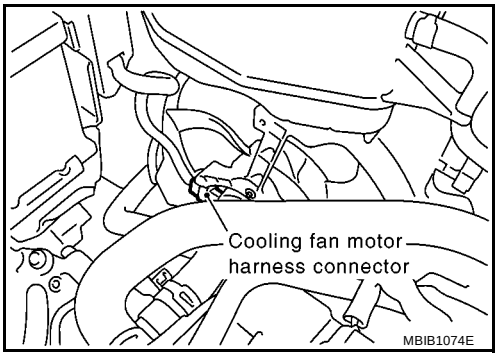

OK or NG

OK >> GO TO 5.
NG >> GO TO 4.

4. DETECT MALFUNCTIONING PART

Check the following.

- Harness for open or short between cooling fan motor and IPDM E/R
- Harness for open or short between cooling fan motor and ground
- Harness for open or short between resistor and IPDM E/R
- Harness for open or short between resistor and cooling fan motor
- Resistor E62

>> Repair open circuit or short to ground or short to power in harness or connectors.

5. CHECK COOLING FAN MOTOR

Refer to EC-358, "Component Inspection" .

OK or NG

OK >> GO TO 6.
NG >> Replace cooling fan motor.

6. CHECK INTERMITTENT INCIDENT

Perform EC-127, "TROUBLE DIAGNOSIS FOR INTERMITTENT INCIDENT" .

OK or NG

OK >> Replace IPDM E/R. Refer to PG-18, "IPDM E/R (INTELLIGENT POWER DISTRIBUTION MODULE ENGINE ROOM)" .

NG >> Repair or replace harness or connector.

Procedure B

1. CHECK COOLING FAN MOTORS CIRCUIT

1. Turn ignition switch OFF.
2. Disconnect IPDM E/R harness connector E6.
3. Disconnect cooling fan motor harness connector.
4. Check harness continuity between IPDM E/R terminal 12 and cooling fan motor terminal 1, cooling fan motor terminal 2 and ground. Refer to Wiring Diagram.

   Continuity should exist.

5. Also check harness for short to ground and short to power.

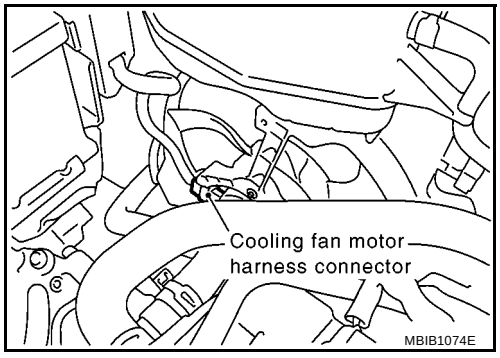

OK or NG

OK >> GO TO 3.

NG >> GO TO 2.

2. DETECT MALFUNCTIONING PART

Check the following.

- Harness for open or short between cooling fan motor and IPDM E/R
- Harness for open or short between cooling fan motor and ground

>> Repair open circuit or short to ground or short to power in harness or connectors.

3. CHECK COOLING FAN MOTOR

Refer to EC-358, "Component Inspection" .

OK or NG

OK >> GO TO 4.

NG >> Replace cooling fan motor.

4. CHECK INTERMITTENT INCIDENT

Perform EC-127, "TROUBLE DIAGNOSIS FOR INTERMITTENT INCIDENT" .

OK or NG

OK >> Replace IPDM E/R. Refer to PG-18, "IPDM E/R (INTELLIGENT POWER DISTRIBUTION MODULE ENGINE ROOM)" .

NG >> Repair or replace harness or connector.

PROCEDURE FOR MODELS WITHOUT AIR CONDITIONER

1. INSPECTION START

Do you have CONSULT-II?

Yes or No

Yes >> GO TO 2.
No >> GO TO 3.

2. CHECK COOLING FAN OPERATION

With CONSULT-II

1. Turn ignition switch ON.
2. Perform “COOLING FAN” in “ACTIVE TEST” mode with CONSULT-II and touch “LOW” on the CONSULT-II screen.
3. Make sure that cooling fan operates.

OK or NG

OK >> GO TO4.
NG >> Check cooling fan control circuit. (Go to EC-356, "Procedure A" .)

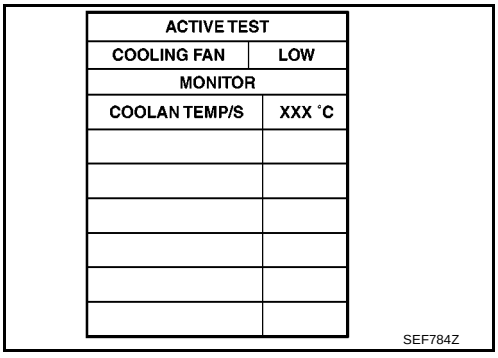

ACTIVE TEST	
COOLING FAN	LOW
MONITOR	
COOLAN TEMP/S	XXX °C

SEF784Z

3. CHECK COOLING FAN OPERATION

Without CONSULT-II

1. Turn ignition switch OFF.
2. Disconnect engine coolant temperature sensor harness connector.
3. Connect 150Ω resistor to engine coolant temperature sensor harness connector.
4. Restart engine and make sure that cooling fan operates.

OK or NG

OK >> GO TO 4.
NG >> Check cooling fan control circuit. (Go to EC-356, "Procedure A" .)

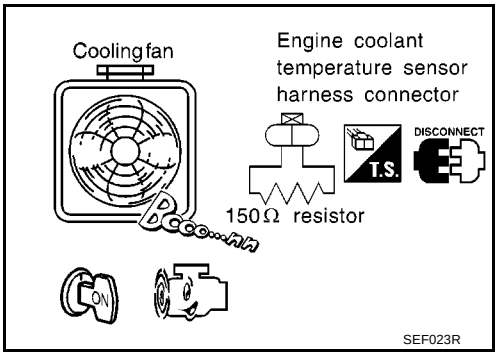

SEF023R

4. CHECK COOLING SYSTEM FOR LEAK

Refer to CO-8, "ENGINE COOLANT" .

OK or NG

OK >> GO TO 6.
NG >> GO TO 5.

5. DETECT MALFUNCTIONING PART

Check the following for leak.

- Hose
- Radiator
- Water pump (Refer to CO-17, "WATER PUMP" .)

>> Repair or replace.

6. CHECK RADIATOR CAP

Refer to CO-15, "Checking Radiator Cap (Models without A/C)" .

OK or NG

OK >> GO TO 7.
NG >> Replace radiator cap.

7. CHECK THERMOSTAT

Check the following.

- Thermostat. Refer to CO-19, "THERMOSTAT" .
- Engine coolant temperature sensor. Refer to EC-170, "Component Inspection" .

OK or NG

OK >> GO TO 8.
NG >> Replace malfunctioning component.

8. CHECK MAIN 12 CAUSES

If the cause cannot be isolated, go to EC-357, "Main 12 Causes of Overheating" .

>> **INSPECTION END**

Procedure A

1. CHECK POWER SUPPLY CIRCUIT

1. Turn ignition switch OFF.
2. Disconnect IPDM E/R harness connector E6.
3. Check voltage between IPDM E/R terminal 14 and ground with CONSULT-II or tester.

Voltage: Battery voltage

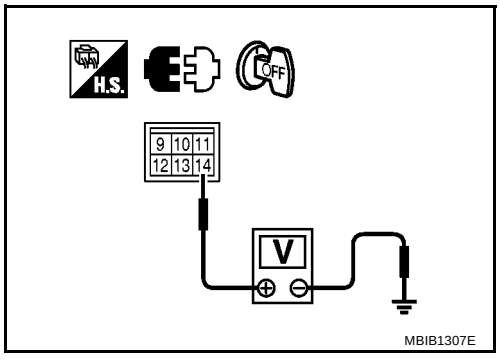

OK or NG

OK >> GO TO 3.
NG >> GO TO 2.

2. DETECT MALFUNCTIONING PART

Check the following.

- 40A fusible link
- Harness for open or short between IPDM E/R and battery

>> Repair open circuit or short to ground or short to power in harness or connectors.

3. CHECK COOLING FAN MOTORS CIRCUIT

1. Disconnect cooling fan motor harness connector.
2. Check harness continuity between cooling fan motor terminal 1 and IPDM E/R terminal 10, cooling fan motor terminal 2 and ground.
   Refer to wiring diagram.

   Continuity should exist.

3. Also check harness for short to ground and short to power.

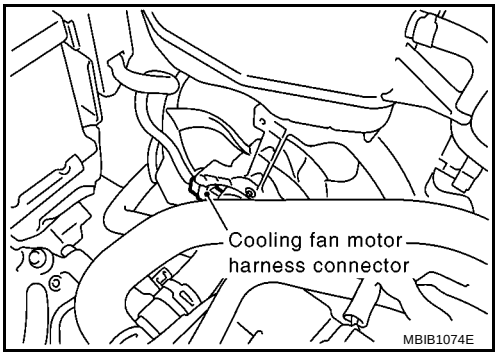

OK or NG

OK >> GO TO 5.
NG >> GO TO 4.

4. DETECT MALFUNCTIONING PART

Check the following.

- Harness for open or short between cooling fan motor and IPDM E/R
- Harness for open or short between cooling fan motor and ground

>> Repair open circuit or short to ground or short to power in harness or connectors.

5. CHECK COOLING FAN MOTOR

Refer to EC-358, "Component Inspection" .

OK or NG

OK >> GO TO 6.
NG >> Replace cooling fan motor.

6. CHECK INTERMITTENT INCIDENT

Perform EC-127, "TROUBLE DIAGNOSIS FOR INTERMITTENT INCIDENT" .

OK or NG

OK >> Replace IPDM E/R. Refer to PG-18, "IPDM E/R (INTELLIGENT POWER DISTRIBUTION MODULE ENGINE ROOM)" .
NG >> Repair or replace harness or connector.

Main 12 Causes of Overheating

BBS0031M

Engine	Step	Inspection item	Equipment	Standard	Reference page
OFF	1	● Blocked radiator ● Blocked condenser ● Blocked radiator grille ● Blocked bumper	● Visual	No blocking	—
	2	● Coolant mixture	● Coolant tester	50 - 50% coolant mixture	See MA-26, "Engine Coolant Mixture Ratio" .
	3	● Coolant level	● Visual	Coolant up to MAX level in reservoir tank and radiator filler neck	See CO-8, "LEVEL CHECK" .
	4*5	● Radiator cap	● Pressure tester	59 - 98 kPa (0.59 - 0.98 bar, 0.6 - 1.0 kg/cm^2 , 9 - 14 psi) (Limit)	See CO-15, "Checking Radiator Cap (Models without A/C)" .
	4*6	● Reservoir tank cap	● Pressure tester	88 kPa (0.88 bar, 0.90 kg/cm^2 , 12.8psi)	See CO-16, "Checking Reservoir Tank Cap (Models with A/C)" .

Engine	Step	Inspection item	Equipment	Standard	Reference page
ON*2	5	● Coolant leaks	● Visual	No leaks	See CO-8, "LEAK CHECK" .
ON*2	6	● Thermostat	● Touch the upper and lower radiator hoses	Both hoses should be hot	See CO-19, "THERMOSTAT" , and CO-12, "RADIATOR" .
ON*1	7	● Cooling fan	● CONSULT-II	Operating	See trouble diagnosis for DTC P1217 (EC-351).
OFF	8	● Combustion gas leak	● Color checker chemical tester 4 Gas analyzer	Negative	—
ON*3	9	● Coolant temperature gauge	● Visual	Gauge less than 3/4 when driving	—
		● Coolant overflow to reservoir tank	● Visual	No overflow during driving and idling	See CO-9, "Changing Engine coolant" .
OFF*4	10	● Coolant return from reservoir tank to radiator	● Visual	Should be initial level in reservoir tank	See CO-8, "LEVEL CHECK" .
OFF	11	● Cylinder head	● Straight gauge feeler gauge	0.1 mm (0.004 in) Maximum distortion (warping)	See EM-60, "CYLINDER HEAD" .
	12	● Cylinder block and pistons	● Visual	No scuffing on cylinder walls or piston	See EM-74, "CYLINDER BLOCK" .

*1: Turn the ignition switch ON.
*2: Engine running at 3,000 rpm for 10 minutes.
*3: Drive at 90 km/h (55 MPH) for 30 minutes and then let idle for 10 minutes.
*4: After 60 minutes of cool down time.
*5: Models without A/C.
*6: Models with A/C.
For more information, refer to CO-5, "OVERHEATING CAUSE ANALYSIS" .

Component Inspection

BBS0031N

COOLING FAN MOTOR

1. Disconnect cooling fan motor harness connector.
2. Supply cooling fan motor terminals with battery voltage and check operation.

	Terminals	
	(+)	(-)
Cooling fan motor	1	2

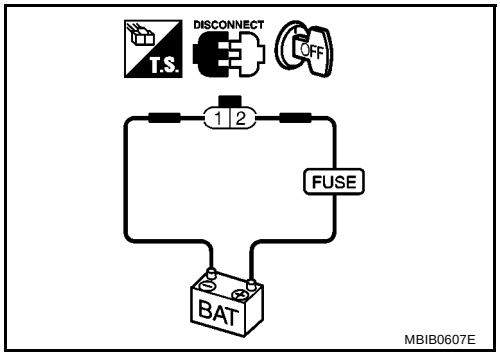

DTC P1225 TP SENSOR

PFP:16119

Component Description

BBS0031O

Electric throttle control actuator consists of throttle control motor, throttle position sensor, etc. The throttle position sensor responds to the throttle valve movement.
The throttle position sensor has the two sensors. These sensors are a kind of potentiometers which transform the throttle valve position into output voltage, and emit the voltage signal to the ECM. In addition, these sensors detect the opening and closing speed of the throttle valve and feed the voltage signals to the ECM. The ECM judges the current opening angle of the throttle valve from these signals and the ECM controls the throttle control motor to make the throttle valve opening angle properly in response to driving condition.

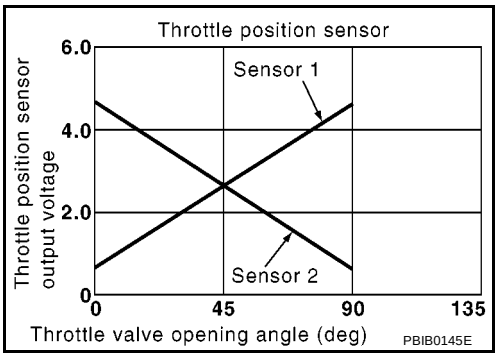

On Board Diagnosis Logic

BBS0031P

The MI will not light up for this self-diagnosis.

DTC No.	Trouble diagnosis name	DTC detecting condition	Possible cause
P1225 1225	Closed throttle position learning performance	Closed throttle position learning value is excessively low.	● Electric throttle control actuator (TP sensor 1 and 2)

DTC Confirmation Procedure

BBS0031Q

NOTE:
If DTC Confirmation Procedure has been previously conducted, always turn ignition switch OFF and wait at least 10 seconds before conducting the next test.
TESTING CONDITION:
Before performing the following procedure, confirm that battery voltage is more than 10V at idle.

WITH CONSULT-II

1. Turn ignition switch ON.
2. Select “DATA MONITOR” mode with CONSULT-II.
3. Turn ignition switch OFF and wait at least 10 seconds.
4. Turn ignition switch ON.
5. If 1st trip DTC is detected, go to EC-360, "Diagnostic Procedure"
.

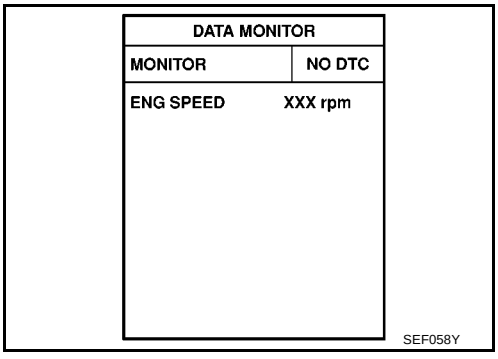

WITH GST

Follow the procedure “WITH CONSULT-II” above.

Diagnostic Procedure

BBS0031R

1. CHECK ELECTRIC THROTTLE CONTROL ACTUATOR VISUALLY

1. Turn ignition switch OFF.
2. Remove the intake air duct.
3. Check if foreign matter is caught between the throttle valve and the housing.

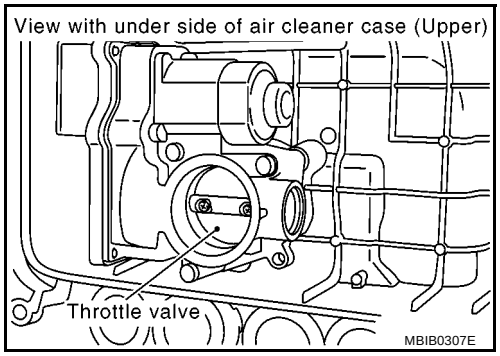

OK or NG

OK >> GO TO 2.
NG >> Remove the foreign matter and clean the electric throttle control actuator inside.

2. REPLACE ELECTRIC THROTTLE CONTROL ACTUATOR

1. Replace the electric throttle control actuator.
2. Perform EC-69, "Throttle Valve Closed Position Learning" .
3. Perform EC-69, "Idle Air Volume Learning" .

>> **INSPECTION END**

Removal and Installation

BBS0031S

ELECTRIC THROTTLE CONTROL ACTUATOR

Refer to EM-18, "AIR CLEANER AND AIR DUCT" .

DTC P1226 TP SENSOR

PFP:16119

Component Description

BBS0031T

Electric throttle control actuator consists of throttle control motor, throttle position sensor, etc. The throttle position sensor responds to the throttle valve movement.
The throttle position sensor has the two sensors. These sensors are a kind of potentiometers which transform the throttle valve position into output voltage, and emit the voltage signal to the ECM. In addition, these sensors detect the opening and closing speed of the throttle valve and feed the voltage signals to the ECM. The ECM judges the current opening angle of the throttle valve from these signals and the ECM controls the throttle control motor to make the throttle valve opening angle properly in response to driving condition.

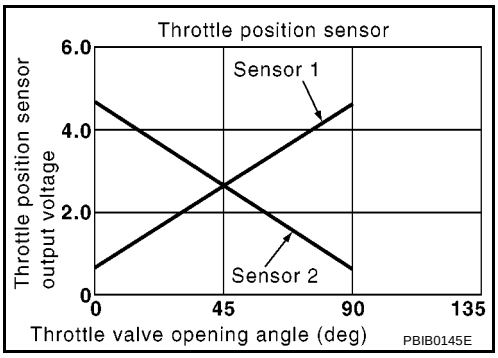

On Board Diagnosis Logic

BBS0031U

The MI will not light up for this self-diagnosis.

DTC No.	Trouble diagnosis name	DTC detecting condition	Possible cause
P1226 1226	Closed throttle position learning performance	Closed throttle position learning is not performed successfully, repeatedly.	● Electric throttle control actuator (TP sensor 1 and 2)

DTC Confirmation Procedure

BBS0031V

NOTE:
If DTC Confirmation Procedure has been previously conducted, always turn ignition switch OFF and wait at least 10 seconds before conducting the next test.
TESTING CONDITION:
Before performing the following procedure, confirm that battery voltage is more than 10V at idle.

WITH CONSULT-II

1. Turn ignition switch ON.
2. Select “DATA MONITOR” mode with CONSULT-II.
3. Turn ignition switch OFF and wait at least 10 seconds.
4. Turn ignition switch ON.
5. Repeat steps 3 and 4 for 32 times.
6. If 1st trip DTC is detected, go to EC-362, "Diagnostic Procedure"
.

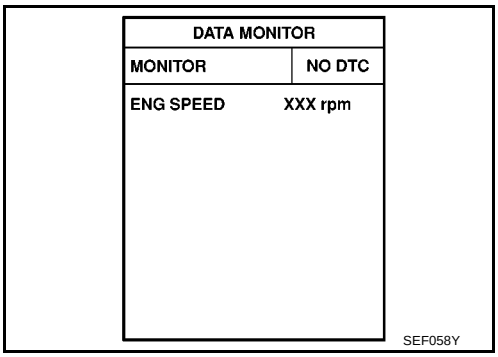

WITH GST

Follow the procedure “WITH CONSULT-II” above.

Diagnostic Procedure

BBS0031W

1. CHECK ELECTRIC THROTTLE CONTROL ACTUATOR VISUALLY

1. Turn ignition switch OFF.
2. Remove the intake air duct.
3. Check if foreign matter is caught between the throttle valve and the housing.

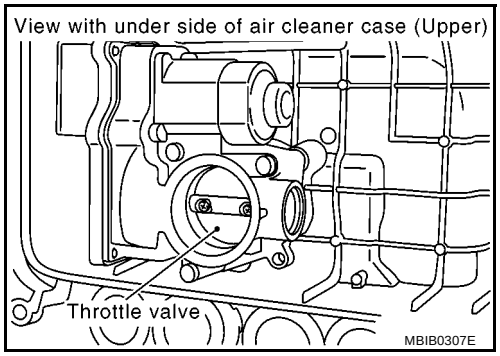

OK or NG

OK >> GO TO 2.
NG >> Remove the foreign matter and clean the electric throttle control actuator inside.

2. REPLACE ELECTRIC THROTTLE CONTROL ACTUATOR

1. Replace the electric throttle control actuator.
2. Perform EC-69, "Throttle Valve Closed Position Learning" .
3. Perform EC-69, "Idle Air Volume Learning" .

>> **INSPECTION END**

Removal and Installation

BBS0031X

ELECTRIC THROTTLE CONTROL ACTUATOR

Refer to EM-18, "AIR CLEANER AND AIR DUCT" .

DTC P1229 SENSOR POWER SUPPLY

PFP:16119

On Board Diagnosis Logic

BBS0031Y

This self-diagnosis has the one trip detection logic.

DTC No.	Trouble diagnosis name	DTC detecting condition	Possible cause
P1229 1229	Sensor power supply circuit short	ECM detects a voltage of power source for sensor is excessively low or high.	● Harness or connectors (APP sensor 1 circuit is shorted.) (Manifold absolute pressure sensor is shorted.) (Refrigerant pressure sensor circuit is shorted.) ● Accelerator pedal position sensor (APP sensor 1) ● Manifold absolute pressure sensor ● Refrigerant pressure sensor

FAIL-SAFE MODE

When the malfunction is detected, the ECM enters fail-safe mode and the MI lights up.

Engine operation condition in fail-safe mode
ECM stops the electric throttle control actuator control, throttle valve is maintained at a fixed opening (approx. 5 degrees) by the return spring.

DTC Confirmation Procedure

BBS0031Z

NOTE:
If DTC Confirmation Procedure has been previously conducted, always turn ignition switch OFF and wait at least 10 seconds before conducting the next test.
TESTING CONDITION:
Before performing the following procedure, confirm that battery voltage is more than 10V at idle.

WITH CONSULT-II

1. Turn ignition switch ON.
2. Select “DATA MONITOR” mode with CONSULT-II.
3. Start engine and let it idle for 1 second.
4. If DTC is detected, go to EC-368, "Diagnostic Procedure" .

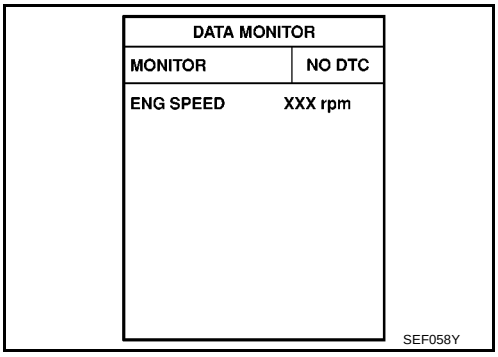

WITH GST

Follow the procedure “WITH CONSULT-II” above.

Wiring Diagram
LHD MODELS

BBS00320

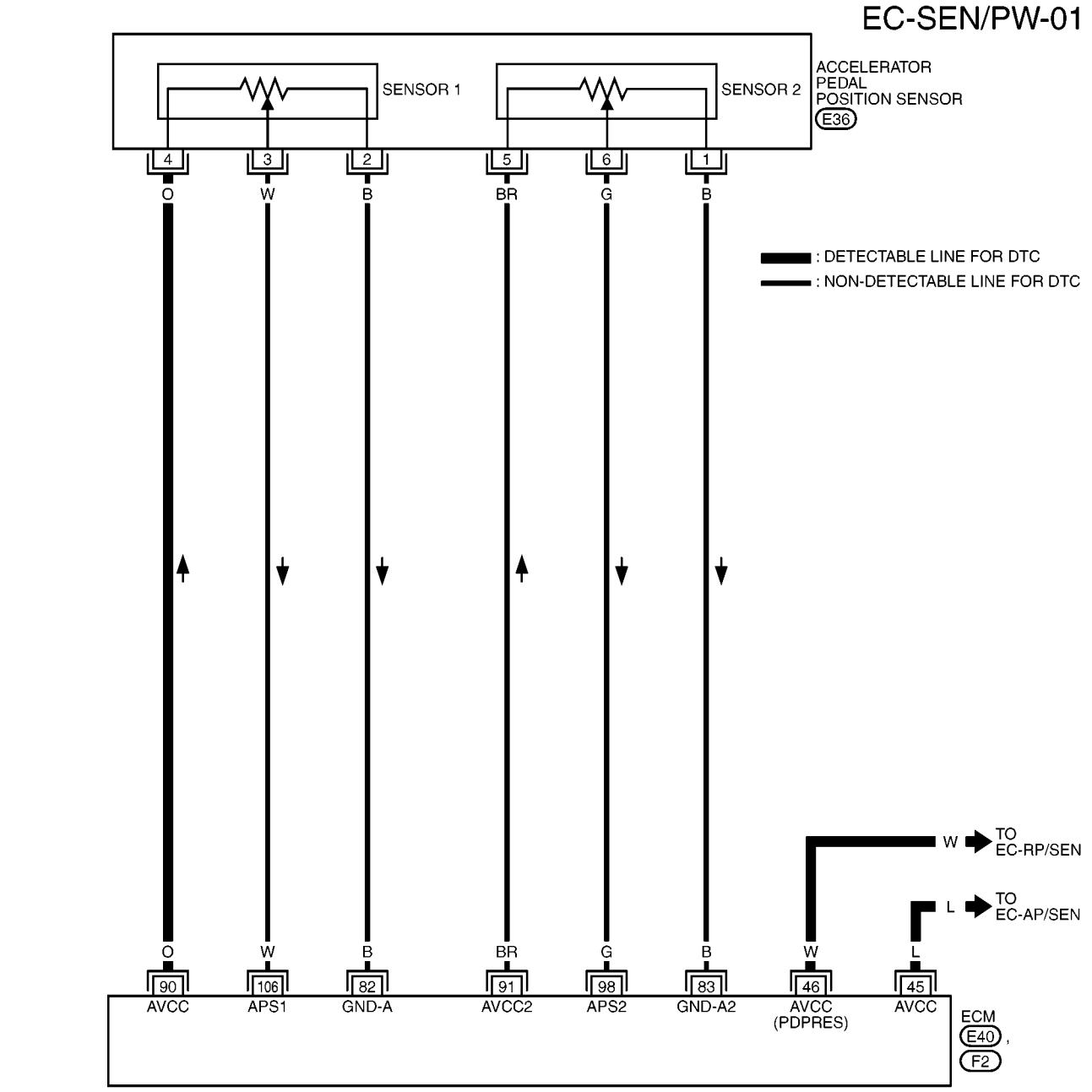

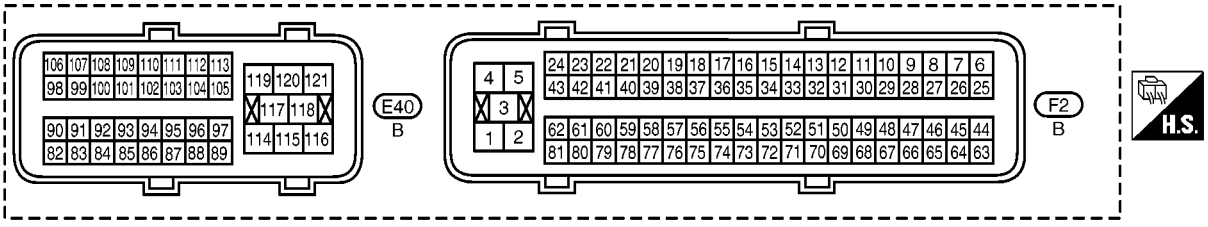

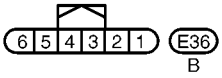

MBWA1525E

Specification data are reference values and are measured between each terminal and ground.

CAUTION:

Do not use ECM ground terminals when measuring input/output voltage. Doing so may result in damage to the ECM's transistor. Use a ground other than ECM terminals, such as the ground.

TERMINAL NO.	WIRE COLOR	ITEM	CONDITION	DATA (DC Voltage)
45	L	Sensor power supply (Manifold absolute pressure sensor)	**[Ignition switch: ON]**	Approximately 5V
46	W	Sensor power supply (Refrigerant pressure sensor)	**[Ignition switch: ON]**	Approximately 5V
82	B	Sensor ground (APP sensor 1)	**[Engine is running]** ● **Warm-up condition** ● Idle speed	Approximately 0V
83	B	Sensor ground (APP sensor 2)	**[Engine is running]** ● **Warm-up condition** ● Idle speed	Approximately 0V
90	O	Sensor power supply (APP sensor 1)	**[Ignition switch: ON]**	Approximately 5V
91	BR	Sensor power supply (APP sensor 2)	**[Ignition switch: ON]**	Approximately 5V
98	G	Accelerator pedal position sensor 2	**[Ignition switch: ON]** ● **Engine stopped** ● Accelerator pedal: Fully released	0.3 - 0.6V
			[Ignition switch: ON] ● **Engine stopped** ● Accelerator pedal: Fully depressed	1.95 - 2.4V
106	W	Accelerator pedal position sensor 1	**[Ignition switch: ON]** ● **Engine stopped** ● Accelerator pedal: Fully released	0.6 - 0.9V
			[Ignition switch: ON] ● **Engine stopped** ● Accelerator pedal: Fully depressed	3.9 - 4.7V

RHD MODELS

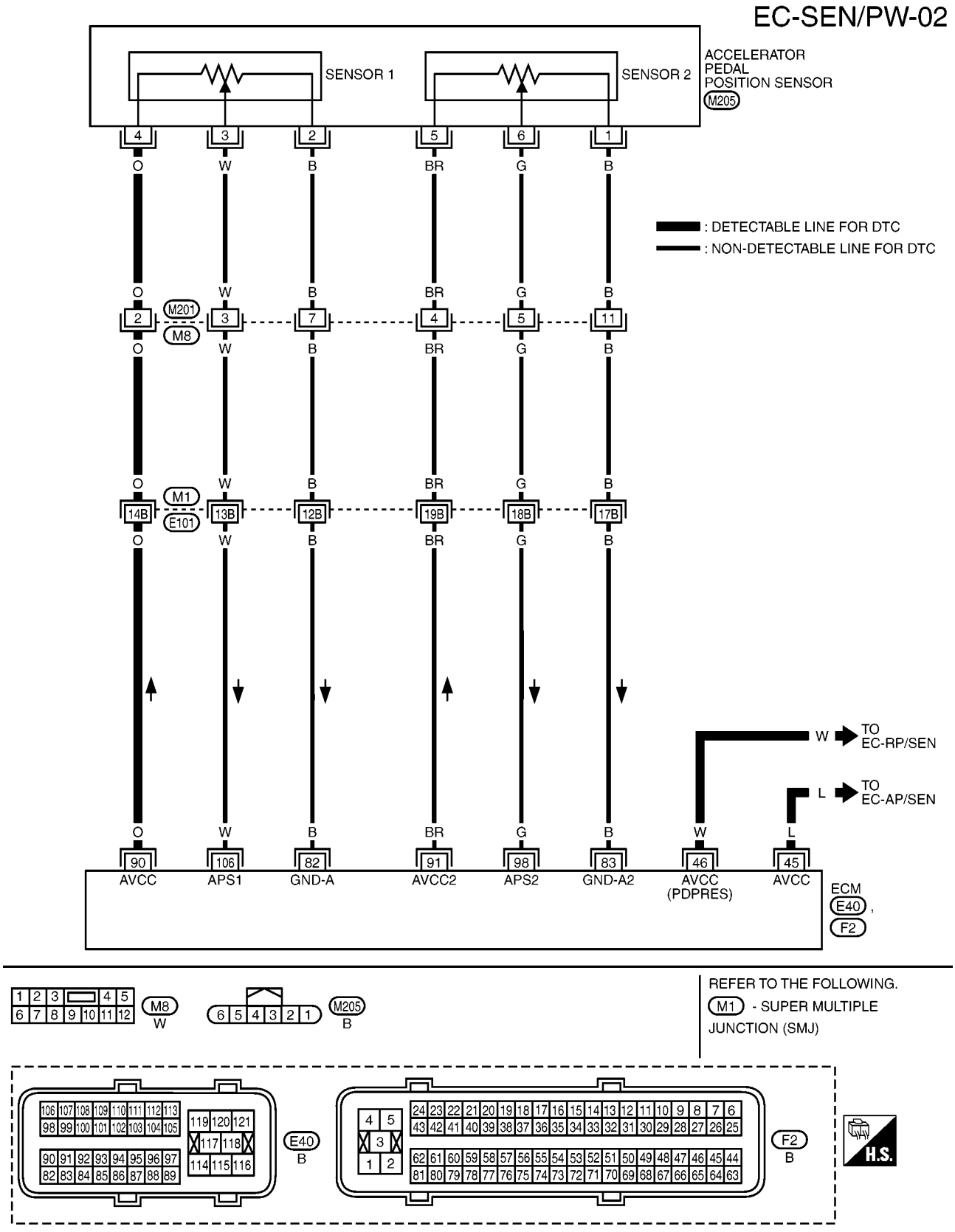
EC-SEN/PW-02
SENSOR 1
SENSOR 2
ACCELERATOR PEDAL POSITION SENSOR
M205
: DETECTABLE LINE FOR DTC
: NON-DETECTABLE LINE FOR DTC
M201
M8
M1
E101
TO EC-RP/SEN
TO EC-AP/SEN
AVCC
APS1
GND-A
AVCC2
APS2
GND-A2
AVCC (PDPRES)
AVCC
ECM
E40
F2
REFER TO THE FOLLOWING.
M1 - SUPER MULTIPLE JUNCTION (SMJ)
M8
M205
E40
F2
H.S.
MBWA1526E

Specification data are reference values and are measured between each terminal and ground.

CAUTION:

Do not use ECM ground terminals when measuring input/output voltage. Doing so may result in damage to the ECM's transistor. Use a ground other than ECM terminals, such as the ground.

TERMINAL NO.	WIRE COLOR	ITEM	CONDITION	DATA (DC Voltage)
45	L	Sensor power supply (Manifold absolute pressure sensor)	**[Ignition switch: ON]**	Approximately 5V
46	W	Sensor power supply (Refrigerant pressure sensor)	**[Ignition switch: ON]**	Approximately 5V
82	B	Sensor ground (APP sensor 1)	**[Engine is running]** ● **Warm-up condition** ● Idle speed	Approximately 0V
83	B	Sensor ground (APP sensor 2)	**[Engine is running]** ● **Warm-up condition** ● Idle speed	Approximately 0V
90	O	Sensor power supply (APP sensor 1)	**[Ignition switch: ON]**	Approximately 5V
91	BR	Sensor power supply (APP sensor 2)	**[Ignition switch: ON]**	Approximately 5V
98	G	Accelerator pedal position sensor 2	**[Ignition switch: ON]** ● **Engine stopped** ● Accelerator pedal: Fully released	0.3 - 0.6V
			[Ignition switch: ON] ● **Engine stopped** ● Accelerator pedal: Fully depressed	1.95 - 2.4V
106	W	Accelerator pedal position sensor 1	**[Ignition switch: ON]** ● **Engine stopped** ● Accelerator pedal: Fully released	0.6 - 0.9V
			[Ignition switch: ON] ● **Engine stopped** ● Accelerator pedal: Fully depressed	3.9 - 4.7V

Diagnostic Procedure

BBS00321

1. CHECK GROUND CONNECTIONS

1. Turn ignition switch OFF.
2. Loosen and retighten ground screws on the body.
   Refer to EC-133, "Ground Inspection" .

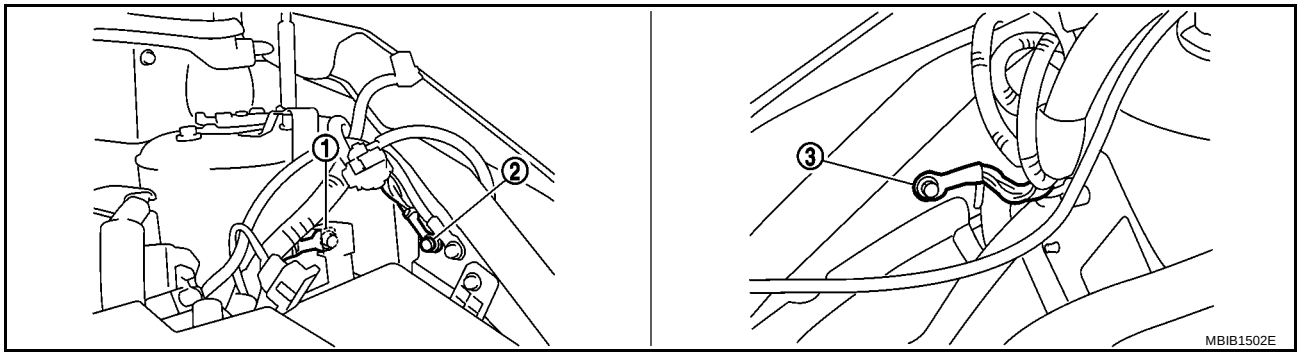

1. Body ground E44
2. Body ground E45
3. Body ground E28

OK or NG

OK >> GO TO 2.
NG >> Repair or replace ground connections.

2. CHECK ACCELERATOR PEDAL POSITION SENSOR 1 POWER SUPPLY CIRCUIT-I

1. Disconnect accelerator pedal position sensor (APP) sensor harness connector.
2. Turn ignition switch ON.

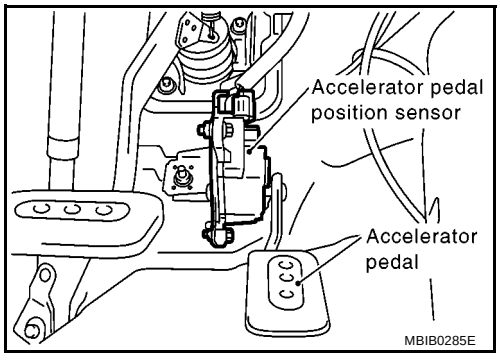

3. Check voltage between APP sensor terminal 4 and ground with CONSULT-II or tester.

   Voltage: Approximately 5V

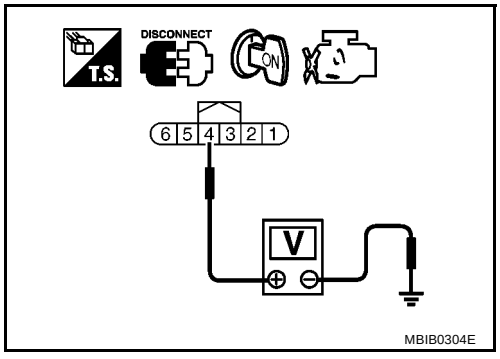

OK or NG

OK >> GO TO 7.
NG >> GO TO 3.

3. CHECK ACCELERATOR PEDAL POSITION SENSOR 1 POWER SUPPLY CIRCUIT-II

1. Turn ignition switch OFF.
2. Disconnect ECM harness connector.
3. Check harness continuity between APP sensor terminal 4 and ECM terminal 90.
   Refer to Wiring Diagram.

Continuity should exist.

OK or NG

OK >> GO TO 5.
NG (LHD models)>>Repair open circuit.
NG (RHD models)>>GO TO 4.

4. DETECT MALFUNCTIONING PART

Check the following.

- Harness connectors M201, M8
- Harness connectors M1, E101
- Harness for open or short between APP sensor and ECM

>> Repair open circuit.

5. CHECK SENSOR POWER SUPPLY CIRCUIT

Check harness for short to power and short to ground, between the following terminals

ECM terminal	Sensor terminal	Reference Wiring Diagram
90	APP sensor terminal 4	EC-364
45	Manifold absolute pressure sensor terminal 2	EC-156
46	Refrigerant pressure sensor terminal 3	EC-444

OK or NG

OK >> GO TO 6.
NG >> Repair short to ground or short to power in harness or connectors.

6. CHECK COMPONENTS

Check the following.

- Manifold absolute pressure sensor (Refer to EC-159, "Component Inspection" .)
- Refrigerant pressure sensor (Refer to ATC-85, "COMPONENT INSPECTION" or MTC-51, "COMPONENT INSPECTION" .)

OK or NG

OK >> GO TO 9.
NG >> Replace malfunctioning component.

7. CHECK APP SENSOR

Refer to EC-400, "Component Inspection" .

OK or NG

OK >> GO TO 9.
NG >> GO TO 8.

8. REPLACE ACCELERATOR PEDAL ASSEMBLY

1. Replace accelerator pedal assembly.
2. Perform EC-69, "Accelerator Pedal Released Position Learning" .
3. Perform EC-69, "Throttle Valve Closed Position Learning" .
4. Perform EC-69, "Idle Air Volume Learning" .

>> **INSPECTION END**

9. CHECK INTERMITTENT INCIDENT

Refer to EC-127, "TROUBLE DIAGNOSIS FOR INTERMITTENT INCIDENT" .

>> **INSPECTION END**

DTC P1706 PNP SWITCH

PFP:32006

Component Description

BBS00322

When the shift lever position is Neutral, park/neutral position (PNP) switch is ON.
ECM detects the position because the continuity of the line (the ON signal) exists.

CONSULT-II Reference Value in Data Monitor Mode

BBS00323

Specification data are reference values.

MONITOR ITEM	CONDITION		SPECIFICATION
P/N POSI SW	● Ignition switch: ON	Shift lever: Neutral	ON
		Shift lever: Except above	OFF

On Board Diagnosis Logic

BBS00324

DTC No.	Trouble diagnosis name	DTC detecting condition	Possible cause
P1706 1706	Park/neutral position switch	The signal of the park/neutral position (PNP) switch is not changed in the process of engine starting and driving.	● Harness or connectors [The park/neutral position (PNP) switch circuit is open or shorted.] ● Park/neutral position (PNP) switch

DTC Confirmation Procedure

BBS00325

CAUTION:
Always drive vehicle at a safe speed.

NOTE:
If DTC Confirmation Procedure has been previously conducted, always turn ignition switch OFF and wait at least 10 seconds before conducting the next test.

WITH CONSULT-II

1. Turn ignition switch ON.
2. Select “P/N POSI SW” in “DATA MONITOR” mode with CONSULT-II. Then check the “P/N POSI SW” signal under the following conditions.

Position (Shift lever)	Known-good signal
Neutral position	ON
Except the above position	OFF

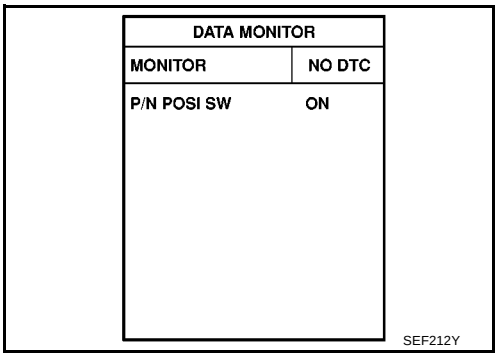

If NG, go to EC-374, "Diagnostic Procedure" .
If OK, go to following step.

3. Select “DATA MONITOR” mode with CONSULT-II.
4. Start engine and warm it up to normal operating temperature.
5. Maintain the following conditions for at least 60 consecutive seconds.

ENG SPEED	1,500 - 4,400 rpm
COOLAN TEMP/S	More than 70°C (158°F)
B/FUEL SCHDL	1.8 - 6.7 msec
VHCL SPEED SE	More than 46 km/h (29 MPH)
Shift lever	Suitable position

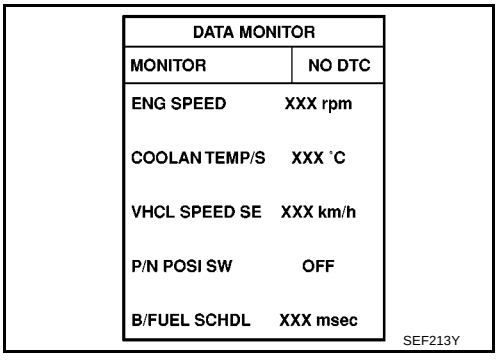

6. If 1st trip DTC is detected, go to EC-374, "Diagnostic Procedure" .

Overall Function Check

BBS00326

Use this procedure to check the overall function of the park/neutral position (PNP) switch circuit. During this check, a 1st trip DTC might not be confirmed.

WITH GST

1. Turn ignition switch ON.
2. Check voltage between ECM terminal 102 (PNP switch signal) and ground under the following conditions.

Condition (Gear position)	Voltage V (Known-good data)
Neutral position	Approx. 0
Except the above position	BATTERY VOLTAGE (11 - 14V)

3. If NG, go to EC-374, "Diagnostic Procedure" .

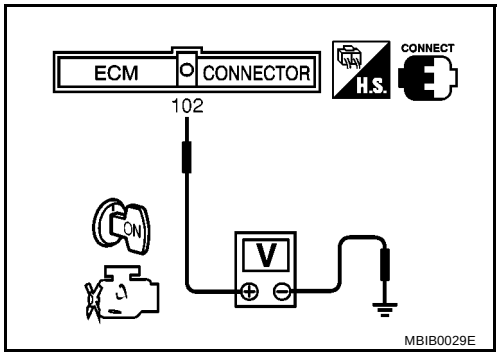

Wiring Diagram

BBS00327

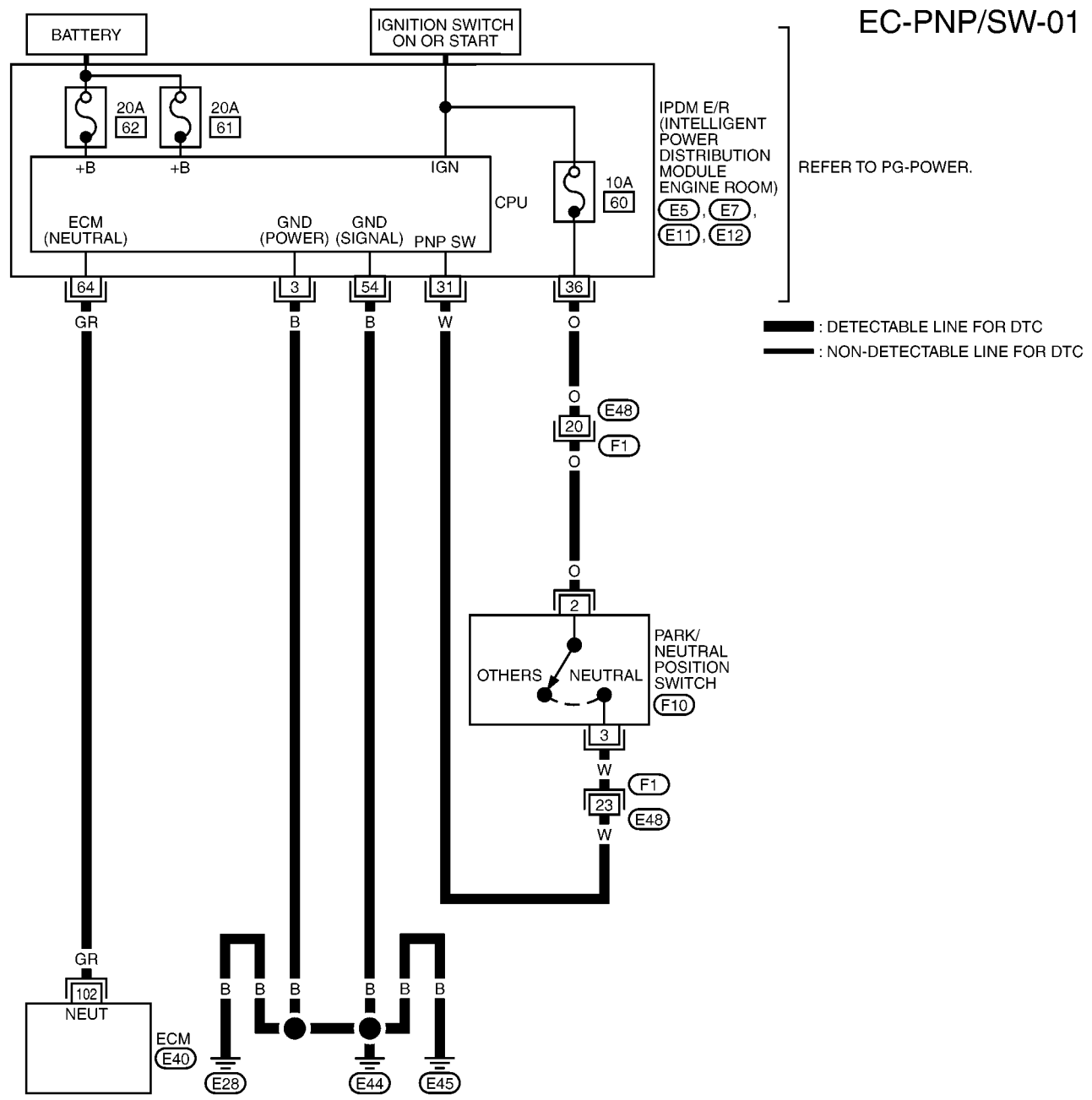

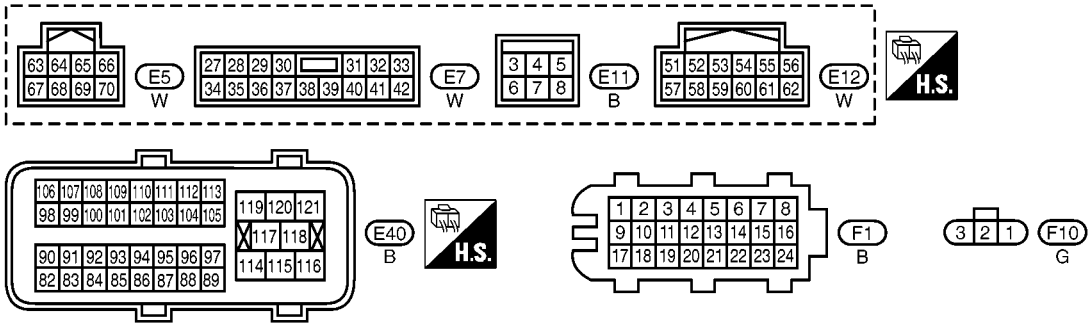

MBWA1527E

Specification data are reference values and are measured between each terminal and ground.

CAUTION:

Do not use ECM ground terminals when measuring input/output voltage. Doing so may result in damage to the ECM's transistor. Use a ground other than ECM terminals, such as the ground.

TERMINAL NO.	WIRE COLOR	ITEM	CONDITION	DATA (DC Voltage)
102	GR	PNP switch	**[Ignition switch: ON]** ● Shift lever position: Neutral	Approximately 0V
			[Ignition switch: ON] ● Except the above gear position	BATTERY VOLTAGE (11 - 14V)

Diagnostic Procedure

BBS00328

1. CHECK PNP SWITCH CIRCUIT

1. Turn ignition switch ON.
2. Check voltage between IPDM E/R terminal 31 and ground under following condition.

Shift lever position	Voltage
Neutral	Battery voltage (11- 14V)
Except above position	Approximately 0V

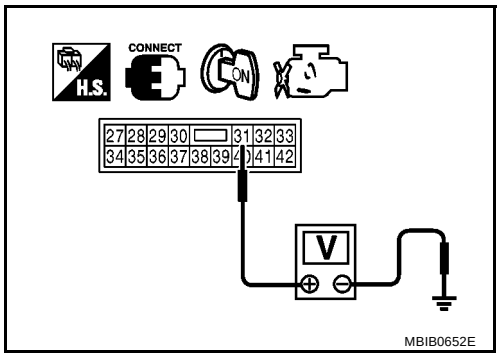

OK or NG

OK >> GO TO 8.
NG >> GO TO 2.

2. CHECK PNP SWITCH POWER SUPPLY CIRCUIT

1. Turn ignition switch OFF.
2. Disconnect PNP switch harness connector.
3. Turn ignition switch ON.
4. Check voltage between PNP switch terminal 2 and ground with CONSULT-II or tester.

Voltage: Battery voltage

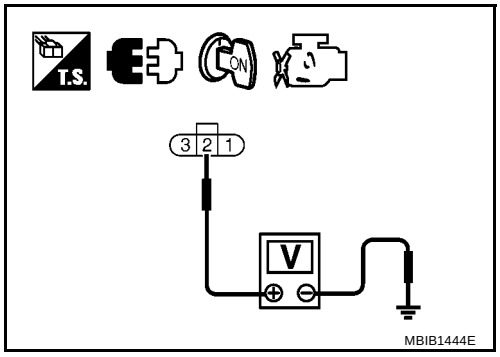

OK or NG

OK >> GO TO 4.
NG >> GO TO 3.

3. DETECT MALFUNCTIONING PARTS

Check the following.

- 10A fuse
- Harness connectors E48, F1
- IPDM E/R connector E7
- Harness for short or open between PNP switch and fuse

>> Repair or replace harness or connectors.

4. CHECK HARNESS CONTINUTY BETWEEN PNP SWITCH AND IPDM E/R

1. Turn ignition switch OFF.
2. Disconnect IPDM E/R harness connector E7.
3. Check harness continuity between IPDM E/R terminal 31 and PNP switch terminal 3.
   Refer to Wiring Diagram.

   Continuity should exist.

4. Also check harness for short to ground and short to power.

OK or NG

OK >> GO TO 6.
NG >> GO TO 5.

5. DETECT MALFUNCTIONING PARTS

Check the following.

- Harness connectors E48, F1
- Harness for short or open between PNP switch and IPDM E/R

>> Repair open circuit or short to ground or short to power in harness or connectors.

6. CHECK PNP SWITCH

Refer to MT-16, "Park/Neutral Position Switch" .

OK or NG

OK >> GO TO 7.
NG >> Replace PNP switch.

7. CHECK INTERMITTENT INCIDENT

Refer to EC-127, "TROUBLE DIAGNOSIS FOR INTERMITTENT INCIDENT" .

>> **INSPECTION END**

8. CHECK PNP SWITCH GROUND CIRCUIT FOR OPEN AND SHORT

1. Turn ignition switch OFF.
2. Disconnect IPDM E/R harness connectors E11 and E12.
3. Check harness continuity between IPDM E/R terminal 3, 54 and ground.
   Refer to Wiring Diagram.

   Continuity should exist.

4. Also check harness for short to power.

OK or NG

OK >> GO TO 9.
NG >> Repair open circuit or short to power in harness or connectors.

9. CHECK PNP SWITCH INPUT SIGNAL CIRCUIT FOR OPEN AND SHORT

1. Disconnect IPDM E/R harness connector E5
2. Disconnect ECM harness connector.
3. Check harness continuity between ECM terminal 102 and IPDM E/R terminal 64.
   Refer to Wiring Diagram.

   Continuity should exist.

4. Also check harness for short to ground and short to power.

OK or NG

OK >> GO TO 10.
NG >> Repair open circuit or short to ground or short to power in harness or connectors.

10. CHECK INTERMITTENT INCIDENT

Refer to EC-127, "TROUBLE DIAGNOSIS FOR INTERMITTENT INCIDENT" .

OK or NG

OK >> Replace IPDM E/R. Refer to PG-18, "IPDM E/R (INTELLIGENT POWER DISTRIBUTION MODULE ENGINE ROOM)" .
NG >> Repair or replace.

DTC P1805 BRAKE SWITCH

PFP:25320

Description

BBS00329

Brake switch signal is applied to the ECM through the stop lamp switch when the brake pedal is depressed. This signal is used mainly to decrease the engine speed when the vehicle is driving.

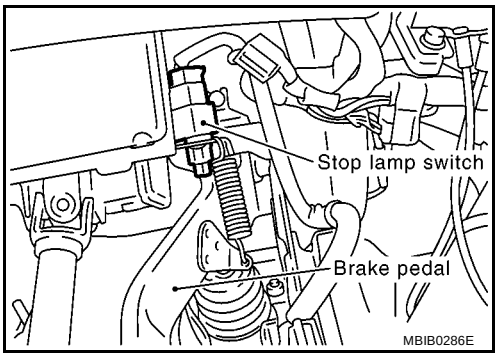

CONSULT-II Reference Value in Data Monitor Mode

BBS0032A

Specification data are reference values.

MONITOR ITEM	CONDITION		SPECIFICATION
BRAKE SW	● Ignition switch: ON	Brake pedal: Fully released	OFF
		Brake pedal: Slightly depressed	ON

On Board Diagnosis Logic

BBS0032B

The MI will not light up for this self-diagnosis.

DTC No.	Trouble diagnosis name	DTC detecting condition	Possible cause
P1805 1805	Brake switch	A brake switch signal is not sent to ECM for extremely long time while the vehicle is driving.	● Harness or connectors (Stop lamp switch circuit is open or shorted.) ● Stop lamp switch

FAIL-SAFE MODE

When the malfunction is detected, the ECM enters fail-safe mode.

Engine operation condition in fail-fail safe mode	
ECM controls the electric throttle control actuator by regulating the throttle opening to a small range.Therefore,acceleration will be poor.	
Vehicle condition	Driving condition
When engine is idling	Normal
When accelerating	Poor acceleration

DTC Confirmation Procedure

BBS0032D

WITH CONSULT-II

1. Turn ignition switch ON.
2. Fully depress the brake pedal for at least 5 seconds.
3. Erase the DTC with CONSULT-II.
4. Select “DATA MONITOR” mode with CONSULT-II.
5. If 1st trip DTC is detected, go to EC-380, "Diagnostic Procedure"
.

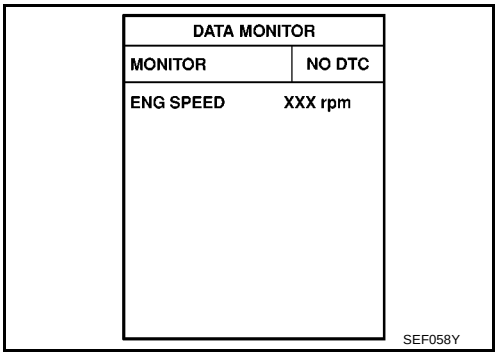

WITH GST

Follow the procedure “WITH CONSULT-II” above.

Wiring Diagram

BBS0032E

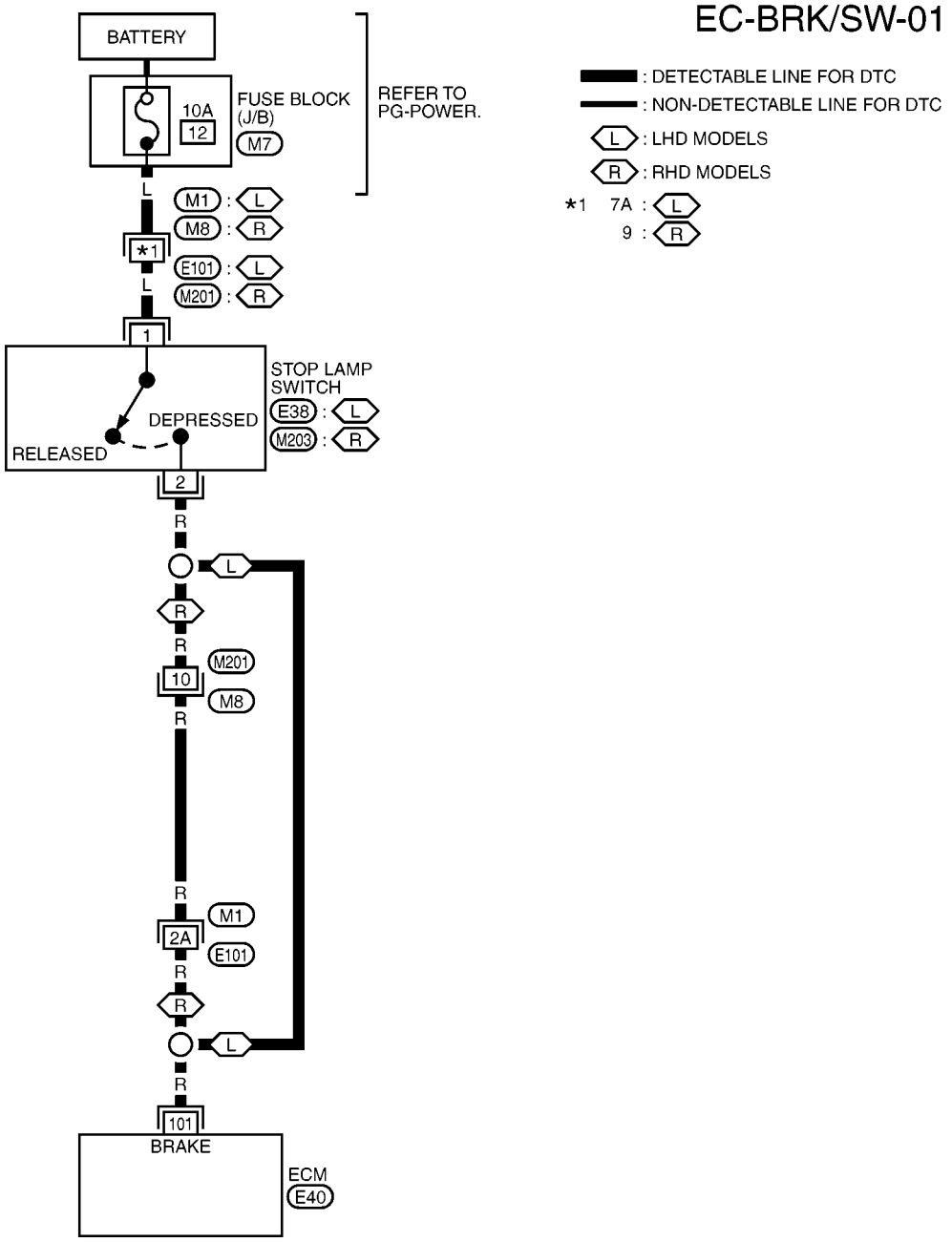

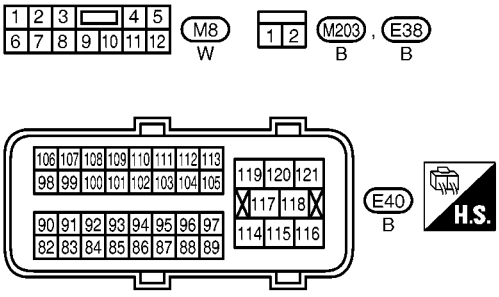

REFER TO THE FOLLOWING.
M1 - SUPER MULTIPLE JUNCTION (SMJ)
M7 - FUSE BLOCK - JUNCTION BOX (J/B)

MBWA1528E

Specification data are reference values and are measured between each terminal and ground.

CAUTION:

Do not use ECM ground terminals when measuring input/output voltage. Doing so may result in damage to the ECM's transistor. Use a ground other than ECM terminals, such as the ground.

TERMINAL NO.	WIRE COLOR	ITEM	CONDITION	DATA (DC Voltage)
101	R	Stop lamp switch	**[Ignition switch: OFF]** ● Brake pedal: Fully released	Approximately 0V
			[Ignition switch: OFF] ● Brake pedal: Slightly depressed	BATTERY VOLTAGE (11 - 14V)

Diagnostic Procedure

BBS0032F

1. CHECK STOP LAMP SWITCH CIRCUIT

1. Turn ignition switch OFF.
2. Check the stop lamp when depressing and releasing the brake pedal.

Brake pedal	Stop lamp
Fully released	Not illuminated
Slightly depressed	Illuminated

OK or NG

OK >> GO TO 4.
NG >> GO TO 2.

2. CHECK STOP LAMP SWITCH POWER SUPPLY CIRCUIT

1. Disconnect stop lamp switch harness connector.

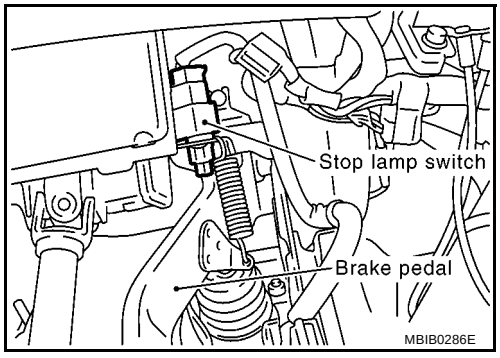

2. Check voltage between stop lamp switch terminal 1 and ground with CONSULT-II or tester.

Voltage: Battery voltage

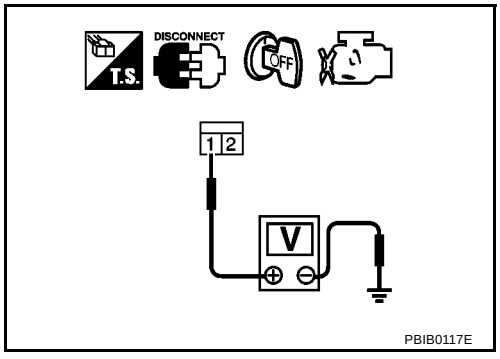

OK or NG

OK >> GO TO 4.
NG >> GO TO 3.

3. DETECT MALFUNCTIONING PART

Check the following.

- 10A fuse
- Fuse block (J/B) connector M7
- Harness connectors M1, E101 (LHD models)
- Harness connectors M8, M201 (RHD models)
- Harness for open and short between stop lamp switch and battery

>> Repair open circuit or short to ground or short to power in harness or connectors.

4. CHECK STOP LAMP SWITCH INPUT SIGNAL CIRCUIT FOR OPEN AND SHORT

1. Disconnect ECM harness connector.
2. Disconnect stop lamp switch harness connector.
3. Check harness continuity between ECM terminal 101 and stop lamp switch terminal 2.
   Refer to Wiring Diagram.

   Continuity should exist.

4. Also check harness for short to ground and short to power.

OK or NG

OK >> GO TO 6.
NG (LHD models)>>Repair open circuit or short to ground or short to power in harness or connectors.
NG (RHD models)>>GO TO 5.

5. DETECT MALFUNCTIONING PART

Check the following.

- Harness connectors M8, M201
- Harness connectors M1, E101
- Harness for open or short between ECM and stop lamp switch

>> Repair open circuit or short to ground or short to power in harness or connectors.

6. CHECK STOP LAMP SWITCH

Refer to EC-382, "Component Inspection" .

OK or NG

OK >> GO TO 7.
NG >> Replace stop lamp switch.

7. CHECK INTERMITTENT INCIDENT

Refer to EC-127, "TROUBLE DIAGNOSIS FOR INTERMITTENT INCIDENT" .

>> **INSPECTION END**

Component Inspection

BBS0032G

STOP LAMP SWITCH

1. Disconnect stop lamp switch harness connector.

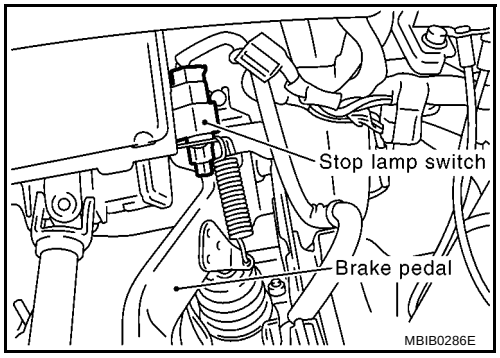

2. Check continuity between stop lamp switch terminals 1 and 2 under the following conditions.

Conditions	Continuity
Brake pedal: Fully released	Should not exist.
Brake pedal: Slightly depressed	Should exist.

If NG, adjust brake pedal installation, refer to BR-6, "BRAKE PEDAL" , and perform step 2 again.

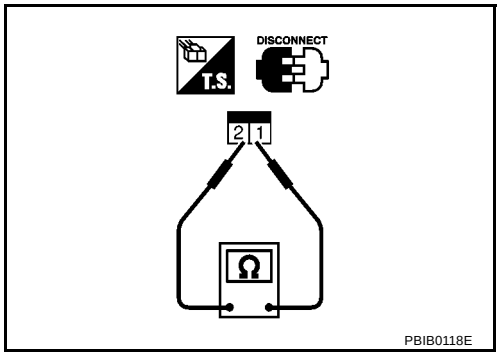

DTC P2122, P2123 APP SENSOR

PFP:18002

Component Description

BBS0032H

The accelerator pedal position sensor is installed on the upper end of the accelerator pedal assembly. The sensor detects the accelerator position and sends a signal to the ECM.
Accelerator pedal position sensor has two sensors. These sensors are a kind of potentiometers which transform the accelerator pedal position into output voltage, and emit the voltage signal to the ECM. In addition, these sensors detect the opening and closing speed of the accelerator pedal and feed the voltage signals to the ECM. The ECM judges the current opening angle of the accelerator pedal from these signals and controls the throttle control motor based on these signals.

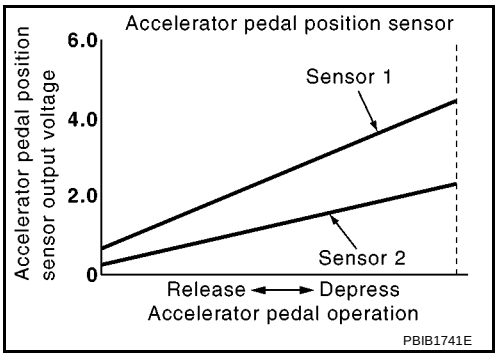

Idle position of the accelerator pedal is determined by the ECM receiving the signal from the accelerator pedal position sensor. The ECM uses this signal for the engine operation such as fuel cut.

CONSULT-II Reference Value in Data Monitor Mode

BBS0032I

Specification data are reference values.

MONITOR ITEM	CONDITION		SPECIFICATION
ACCEL SEN 1	● Ignition switch: ON (Engine stopped)	Accelerator pedal: Fully released	0.6 - 0.9V
		Accelerator pedal: Fully depressed	4.0 - 4.8V
ACCEL SEN 2*	● Ignition switch: ON (Engine stopped)	Accelerator pedal: Fully released	0.6 - 0.9V
		Accelerator pedal: Fully depressed	3.9 - 4.8V
CLSD THL POS	● Ignition switch: ON (Engine stopped)	Accelerator pedal: Fully released	ON
		Accelerator pedal: Slightly depressed	OFF

*: Accelerator pedal position sensor 2 signal is converted by ECM internally. Thus, it differs from ECM terminal voltage.

On Board Diagnosis Logic

BBS0032J

These self-diagnoses have the one trip detection logic.

NOTE:
If DTC P2122 or P2123 is displayed with DTC P1229, first perform the trouble diagnosis for DTC P1229. Refer to EC-363, "DTC P1229 SENSOR POWER SUPPLY" .

DTC No.	Trouble diagnosis name	DTC detecting condition	Possible cause
P2122 2122	Accelerator pedal position sensor 1 circuit low input	An excessively low voltage from the APP sensor 1 is sent to ECM.	● Harness or connectors (APP sensor 1 circuit is open or shorted.) ● Accelerator pedal position sensor (APP sensor 1)
P2123 2123	Accelerator pedal position sensor 1 circuit high input	An excessively high voltage from the APP sensor 1 is sent to ECM.	

FAIL-SAFE MODE

When the malfunction is detected, the ECM enters fail-safe mode and the MI lights up.

Engine operating condition in fail-safe mode
The ECM controls the electric throttle control actuator in regulating the throttle opening in order for the idle position to be within +10 degrees. The ECM regulates the opening speed of the throttle valve to be slower than the normal condition. So, the acceleration will be poor.

DTC Confirmation Procedure

BBS0032K

NOTE:
If DTC Confirmation Procedure has been previously conducted, always turn ignition switch OFF and wait at least 10 seconds before conducting the next test.
TESTING CONDITION:
Before performing the following procedure, confirm that battery voltage is more than 10V at idle.

WITH CONSULT-II

1. Turn ignition switch ON.
2. Select “DATA MONITOR” mode with CONSULT-II.
3. Start engine and let it idle for 1 second.
4. If DTC is detected, go to EC-388, "Diagnostic Procedure" .

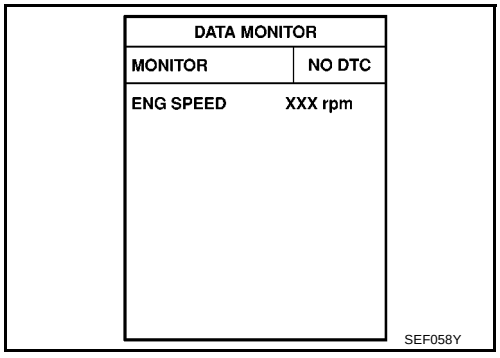

WITH GST

Follow the procedure “WITH CONSULT-II” above.

Wiring Diagram
LHD MODELS

BBS0032L

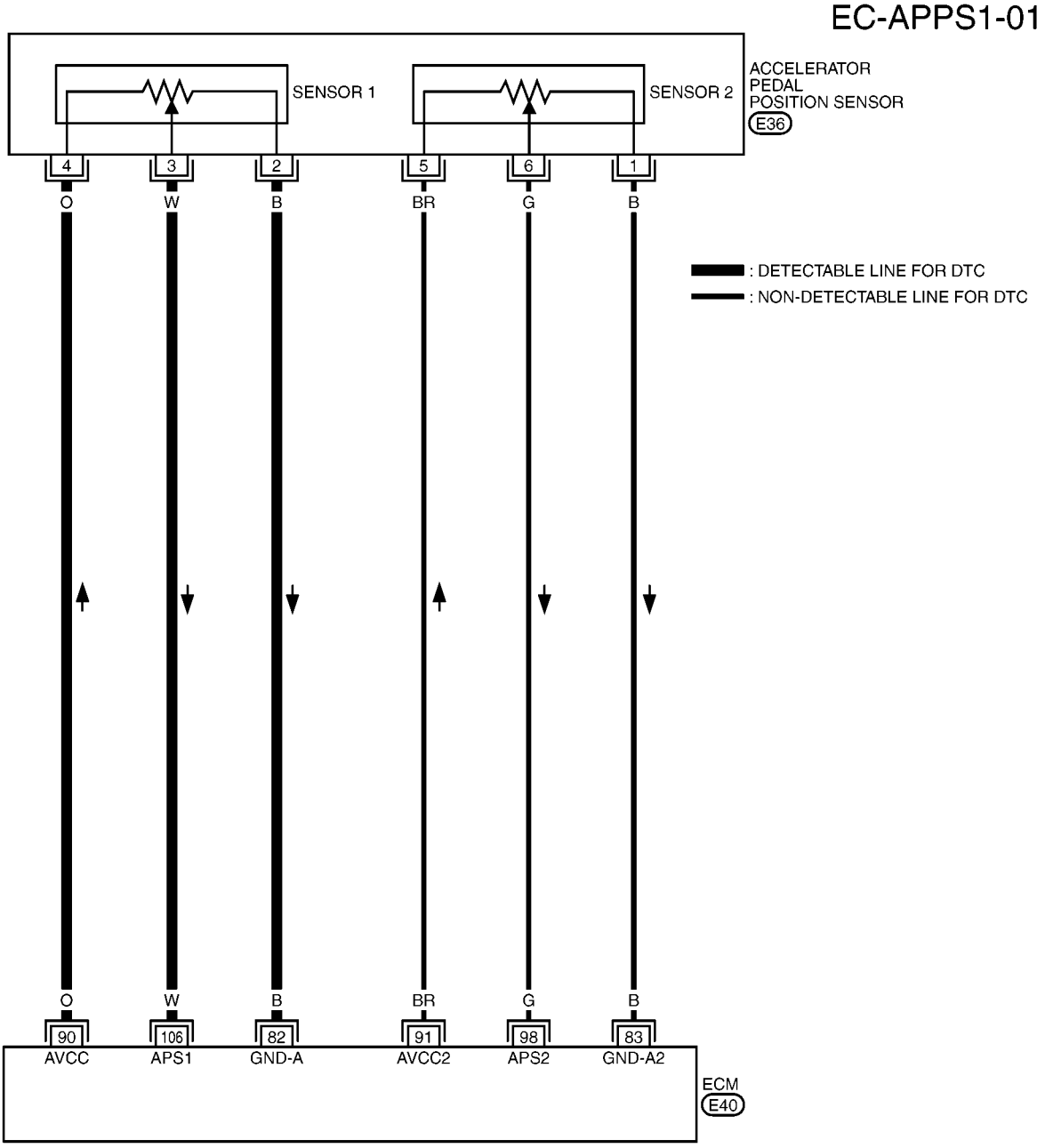

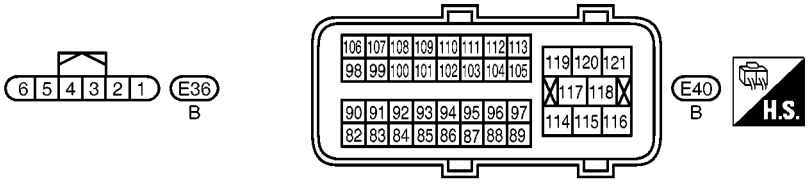

MBWA1529E

Specification data are reference values and are measured between each terminal and ground.

CAUTION:

Do not use ECM ground terminals when measuring input/output voltage. Doing so may result in damage to the ECM's transistor. Use a ground other than ECM terminals, such as the ground.

TERMINAL NO.	WIRE COLOR	ITEM	CONDITION	DATA (DC Voltage)
82	B	Sensor ground (APP sensor 1)	**[Engine is running]** ● **Warm-up condition** ● Idle speed	Approximately 0V
83	B	Sensor ground (APP sensor 2)	**[Ignition switch: ON]** ● **Warm-up condition** ● Idle speed	Approximately 0V
90	O	Sensor power supply (APP sensor 1)	**[Ignition switch: ON]**	Approximately 5V
91	BR	Sensor power supply (APP sensor 2)	**[Ignition switch: ON]**	Approximately 5V
98	G	Accelerator pedal position sensor 2	**[Ignition switch: ON]** ● **Engine stopped** ● Accelerator pedal: Fully released	0.3 - 0.6V
			[Ignition switch: ON] ● **Engine stopped** ● Accelerator pedal: Fully depressed	1.95 - 2.4V
106	W	Accelerator pedal position sensor 1	**[Ignition switch: ON]** ● **Engine stopped** ● Accelerator pedal: Fully released	0.6 - 0.9V
			[Ignition switch: ON] ● **Engine stopped** ● Accelerator pedal: Fully depressed	3.9 - 4.7V

RHD MODELS

EC-APPS1-02

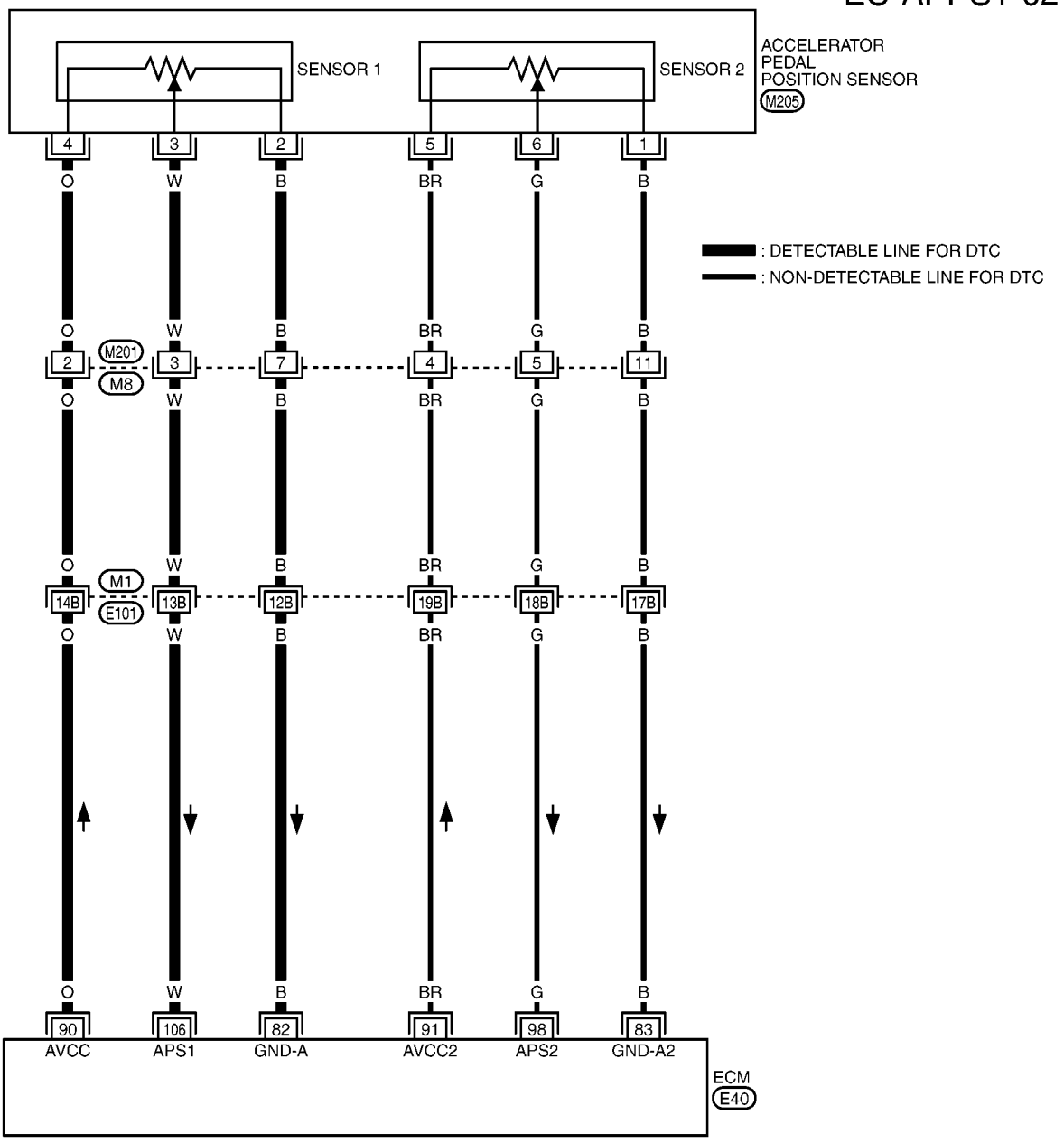

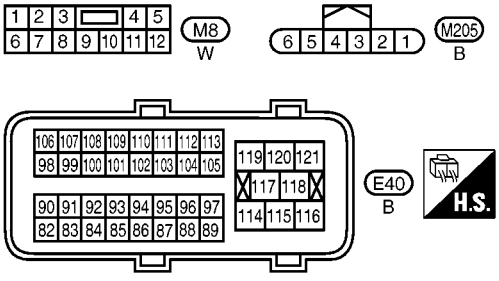

REFER TO THE FOLLOWING.
M1 - SUPER MULTIPLE JUNCTION (SMJ)

MBWA1530E

Specification data are reference values and are measured between each terminal and ground.

CAUTION:

Do not use ECM ground terminals when measuring input/output voltage. Doing so may result in damage to the ECM's transistor. Use a ground other than ECM terminals, such as the ground.

TERMINAL NO.	WIRE COLOR	ITEM	CONDITION	DATA (DC Voltage)
82	B	Sensor ground (APP sensor 1)	**[Engine is running]** ● **Warm-up condition** ● Idle speed	Approximately 0V
83	B	Sensor ground (APP sensor 2)	**[Ignition switch: ON]** ● **Warm-up condition** ● Idle speed	Approximately 0V
90	O	Sensor power supply (APP sensor 1)	**[Ignition switch: ON]**	Approximately 5V
91	BR	Sensor power supply (APP sensor 2)	**[Ignition switch: ON]**	Approximately 5V
98	G	Accelerator pedal position sensor 2	**[Ignition switch: ON]** ● **Engine stopped** ● Accelerator pedal: Fully released	0.3 - 0.6V
			[Ignition switch: ON] ● **Engine stopped** ● Accelerator pedal: Fully depressed	1.95 - 2.4V
106	W	Accelerator pedal position sensor 1	**[Ignition switch: ON]** ● **Engine stopped** ● Accelerator pedal: Fully released	0.6 - 0.9V
			[Ignition switch: ON] ● **Engine stopped** ● Accelerator pedal: Fully depressed	3.9 - 4.7V

Diagnostic Procedure

BBS0032M

1. CHECK GROUND CONNECTIONS

1. Turn ignition switch OFF.
2. Loosen and retighten ground screws on the body.
   Refer to EC-133, "Ground Inspection" .

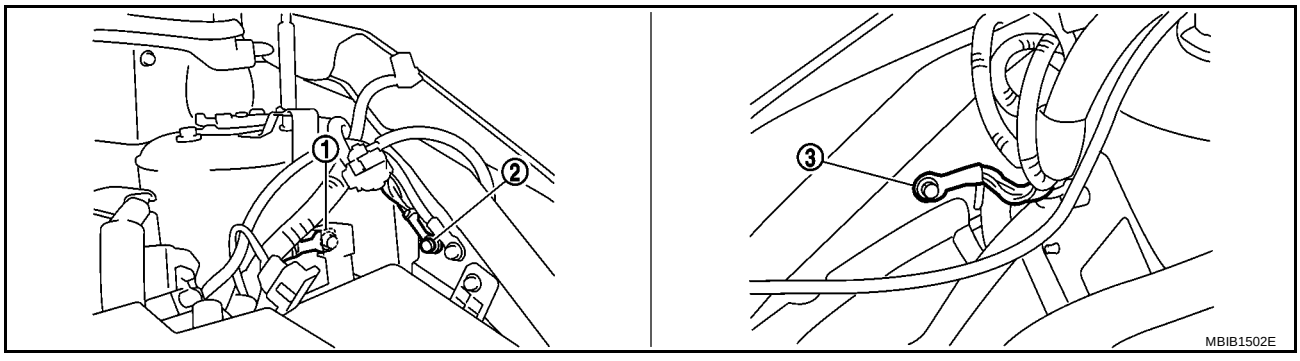

1. Body ground E44
2. Body ground E45
3. Body ground E28

OK or NG

OK >> GO TO 2.
NG >> Repair or replace ground connections.

2. CHECK APP SENSOR 1 POWER SUPPLY CIRCUIT

1. Disconnect accelerator pedal position (APP) sensor harness connector.
2. Turn ignition switch ON.

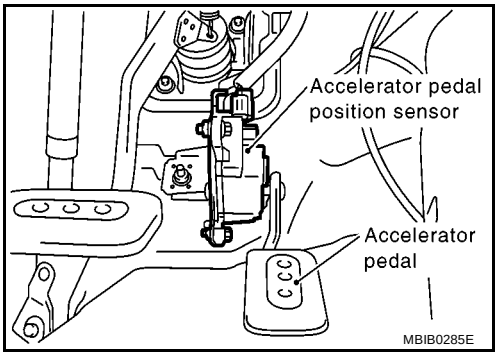

3. Check voltage between APP sensor terminal 4 and ground with CONSULT-II or tester.

Voltage: Approximately 5V

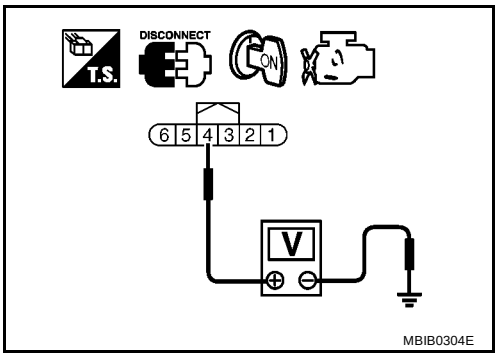

OK or NG

OK >> GO TO 4.
NG (LHD models)>>Repair open circuit or short to ground or short to power in harness or connectors.
NG (RHD models)>>GO TO 3.

3. DETECT MALFUNCTIONING PART

Check the following.

- Harness connectors M1, E101
- Harness connectors M8, M201
- Harness for open or short between ECM and accelerator pedal position sensor

>> Repair open circuit or short to ground or short to power in harness or connectors.

4. CHECK APP SENSOR 1 GROUND CIRCUIT FOR OPEN AND SHORT

1. Turn ignition switch OFF.
2. Disconnect ECM harness connector.
3. Check harness continuity between ECM terminal 82 and APP sensor terminal 2.
   Refer to Wiring Diagram.

Continuity should exist.

4. Also check harness for short to ground and short to power.

OK or NG

OK >> GO TO 6.
NG (LHD models)>>Repair open circuit or short to ground or short to power in harness or connectors.
NG (RHD models)>>GO TO 5.

5. DETECT MALFUNCTIONING PART

Check the following.

- Harness connectors M1, E101
- Harness connectors M8, M201
- Harness for open or short between ECM and accelerator pedal position sensor

>> Repair open circuit or short to ground or short to power in harness or connectors.

6. CHECK APP SENSOR 1 INPUT SIGNAL CIRCUIT FOR OPEN AND SHORT

1. Check harness continuity between ECM terminal 106 and APP sensor terminal 3.
   Refer to Wiring Diagram.

   Continuity should exist.

2. Also check harness for short to ground and short to power.

OK or NG

OK >> GO TO 8.
NG (LHD models)>>Repair open circuit or short to ground or short to power in harness or connectors.
NG (RHD models)>>GO TO 7.

7. DETECT MALFUNCTIONING PART

Check the following.

- Harness connectors M1, E101
- Harness connectors M8, M201
- Harness for open or short between ECM and accelerator pedal position sensor

>> Repair open circuit or short to ground or short to power in harness or connectors.

8. CHECK APP SENSOR

Refer to EC-390, "Component Inspection" .

OK or NG

OK >> GO TO 10.
NG >> GO TO 9.

9. REPLACE ACCELERATOR PEDAL ASSEMBLY

1. Replace the accelerator pedal assembly.
2. Perform EC-69, "Accelerator Pedal Released Position Learning" .
3. Perform EC-69, "Throttle Valve Closed Position Learning" .
4. Perform EC-69, "Idle Air Volume Learning" .

>> **INSPECTION END**

10. CHECK INTERMITTENT INCIDENT

Refer to EC-127, "TROUBLE DIAGNOSIS FOR INTERMITTENT INCIDENT" .

>> **INSPECTION END**

Component Inspection

BBS0032N

ACCELERATOR PEDAL POSITION SENSOR

1. Reconnect all harness connectors disconnected.
2. Turn ignition switch ON.

3. Check voltage between ECM terminals 106 (APP sensor 1 signal), 98 (APP sensor 2 signal) and ground under the following conditions.

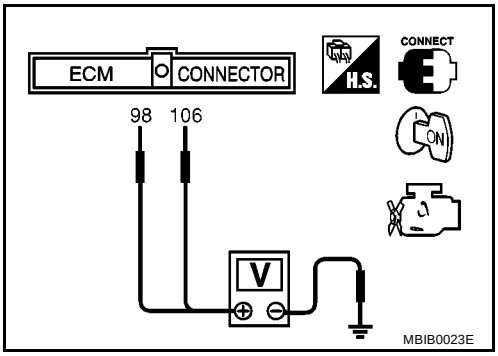

Terminal	Accelerator pedal	Voltage
106 (Accelerator pedal position sensor 1)	Fully released	0.6 - 0.9V
	Fully depressed	3.9 - 4.7V
98 (Accelerator pedal position sensor 2)	Fully released	0.3 - 0.6V
	Fully depressed	1.95 - 2.4V

4. If NG, replace accelerator pedal assembly and go to the next step.
5. Perform EC-69, "Accelerator Pedal Released Position Learning" .
6. Perform EC-69, "Throttle Valve Closed Position Learning" .
7. Perform EC-69, "Idle Air Volume Learning" .

Removal and Installation

BBS0032O

ACCELERATOR PEDAL

Refer to ACC-2, "ACCELERATOR CONTROL SYSTEM" .

DTC P2127, P2128 APP SENSOR

PFP:18002

Component Description

BBS0032P

The accelerator pedal position sensor is installed on the upper end of the accelerator pedal assembly. The sensor detects the accelerator position and sends a signal to the ECM.
Accelerator pedal position sensor has two sensors. These sensors are a kind of potentiometers which transform the accelerator pedal position into output voltage, and emit the voltage signal to the ECM. In addition, these sensors detect the opening and closing speed of the accelerator pedal and feed the voltage signals to the ECM. The ECM judges the current opening angle of the accelerator pedal from these signals and controls the throttle control motor based on these signals.

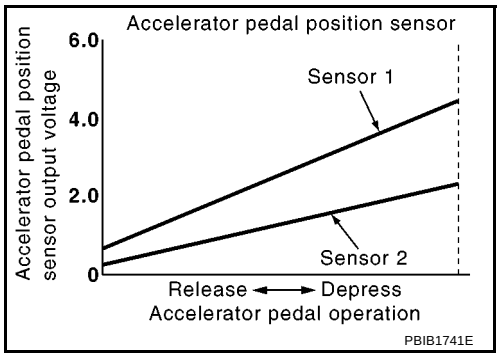

Idle position of the accelerator pedal is determined by the ECM receiving the signal from the accelerator pedal position sensor. The ECM uses this signal for the engine operation such as fuel cut.

CONSULT-II Reference Value in Data Monitor Mode

BBS0032Q

Specification data are reference values.

MONITOR ITEM	CONDITION		SPECIFICATION
ACCEL SEN 1	● Ignition switch: ON (Engine stopped)	Accelerator pedal: Fully released	0.6 - 0.9V
		Accelerator pedal: Fully depressed	4.0 - 4.8V
ACCEL SEN 2*	● Ignition switch: ON (Engine stopped)	Accelerator pedal: Fully released	0.6 - 0.9V
		Accelerator pedal: Fully depressed	3.9 - 4.8V
CLSD THL POS	● Ignition switch: ON (Engine stopped)	Accelerator pedal: Fully released	ON
		Accelerator pedal: Slightly depressed	OFF

*: Accelerator pedal position sensor 2 signal is converted by ECM internally. Thus, it differ from ECM terminal voltage signal.

On Board Diagnosis Logic

BBS0032R

These self-diagnoses have the one trip detection logic.

DTC No.	Trouble diagnosis name	DTC detecting condition	Possible cause
P2127 2127	Accelerator pedal position sensor 2 circuit low input	An excessively low voltage from the APP sensor 2 is sent to ECM.	● Harness or connectors (APP sensor 2 circuit is open or shorted.) (TP sensor circuit is shorted.) ● Accelerator pedal position sensor (APP sensor 2) ● Electric throttle control actuator (TP sensor 1 and 2)
P2128 2128	Accelerator pedal position sensor 2 circuit high input	An excessively high voltage from the APP sensor 2 is sent to ECM.	

FAIL-SAFE MODE

When the malfunction is detected, the ECM enters fail-safe mode and the MI lights up.

Engine operating condition in fail-safe mode
The ECM controls the electric throttle control actuator in regulating the throttle opening in order for the idle position to be within +10 degrees. The ECM regulates the opening speed of throttle valve to be slower than the normal condition. So, the acceleration will be poor.

DTC Confirmation Procedure

BBS0032S

NOTE:
If DTC Confirmation Procedure has been previously conducted, always turn ignition switch OFF and wait at least 10 seconds before conducting the next test.
TESTING CONDITION:
Before performing the following procedure, confirm that battery voltage is more than 10V at idle.

WITH CONSULT-II

1. Turn ignition switch ON.
2. Select “DATA MONITOR” mode with CONSULT-II.
3. Start engine and let it idle for 1 second.
4. If DTC is detected, go to EC-397, "Diagnostic Procedure" .

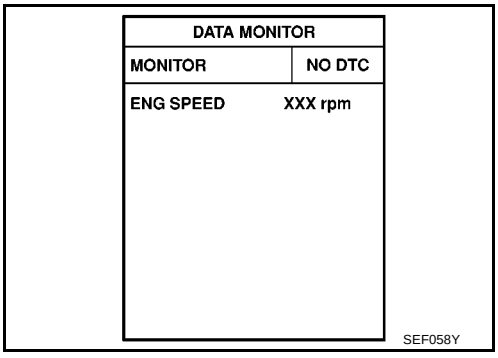

WITH GST

Follow the procedure “WITH CONSULT-II” above.

Wiring Diagram
LHD MODELS

BBS0032T

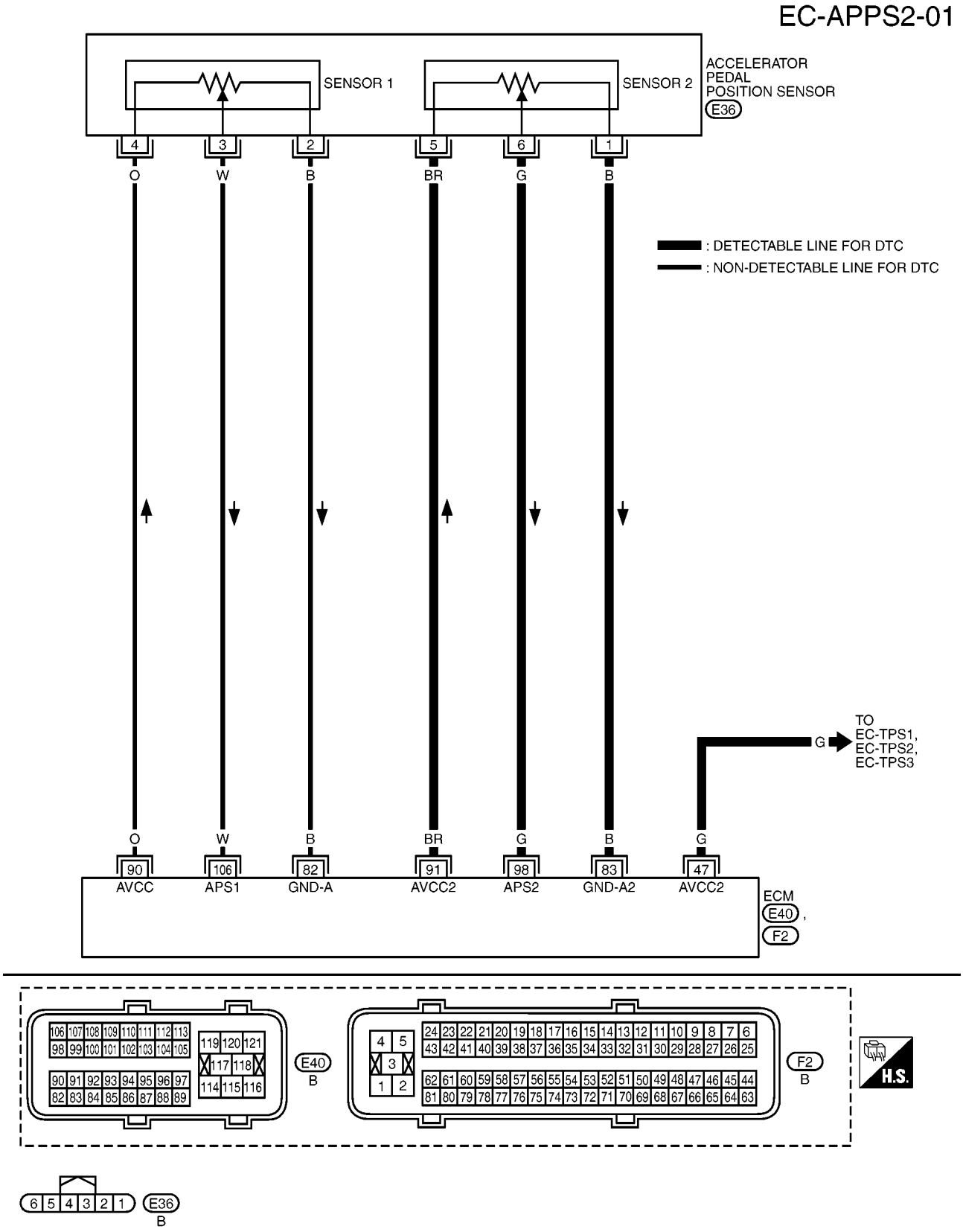

MBWA1531E

Specification data are reference values and are measured between each terminal and ground.

CAUTION:

Do not use ECM ground terminals when measuring input/output voltage. Doing so may result in damage to the ECM's transistor. Use a ground other than ECM terminals, such as the ground.

TERMINAL NO.	WIRE COLOR	ITEM	CONDITION	DATA (DC Voltage)
47	G	Sensor power supply (Throttle position sensor)	**[Ignition switch: ON]**	Approximately 5V
82	B	Sensor ground (APP sensor 1)	**[Engine is running]** ● **Warm-up condition** ● Idle speed	Approximately 0V
83	B	Sensor ground (APP sensor 2)	**[Ignition switch: ON]** ● **Warm-up condition** ● Idle speed	Approximately 0V
90	O	Sensor power supply (APP sensor 1)	**[Ignition switch: ON]**	Approximately 5V
91	BR	Sensor power supply (APP sensor 2)	**[Ignition switch: ON]**	Approximately 5V
98	G	Accelerator pedal position sensor 2	**[Ignition switch: ON]** ● **Engine stopped** ● Accelerator pedal: Fully released	0.3 - 0.6V
			[Ignition switch: ON] ● **Engine stopped** ● Accelerator pedal: Fully depressed	1.95 - 2.4V
106	W	Accelerator pedal position sensor 1	**[Ignition switch: ON]** ● **Engine stopped** ● Accelerator pedal: Fully released	0.6 - 0.9V
			[Ignition switch: ON] ● **Engine stopped** ● Accelerator pedal: Fully depressed	3.9 - 4.7V

RHD MODELS

EC-APPS2-02

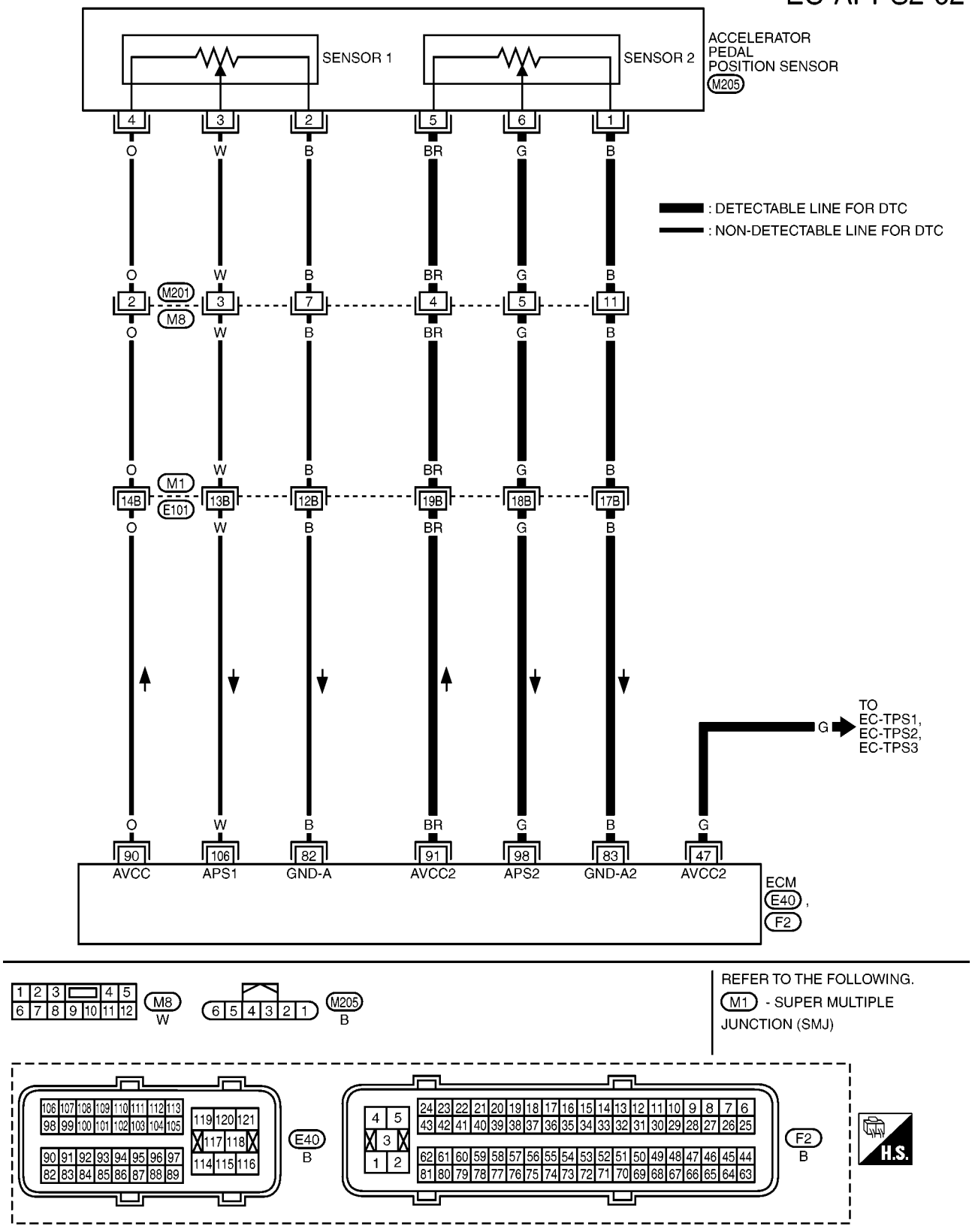

Specification data are reference values and are measured between each terminal and ground.

CAUTION:
Do not use ECM ground terminals when measuring input/output voltage. Doing so may result in damage to the ECM's transistor. Use a ground other than ECM terminals, such as the ground.

TERMINAL NO.	WIRE COLOR	ITEM	CONDITION	DATA (DC Voltage)
47	G	Sensor power supply (Throttle position sensor)	**[Ignition switch: ON]**	Approximately 5V
82	B	Sensor ground (APP sensor 1)	**[Engine is running]** ● **Warm-up condition** ● Idle speed	Approximately 0V
83	B	Sensor ground (APP sensor 2)	**[Ignition switch: ON]** ● **Warm-up condition** ● Idle speed	Approximately 0V
90	O	Sensor power supply (APP sensor 1)	**[Ignition switch: ON]**	Approximately 5V
91	BR	Sensor power supply (APP sensor 2)	**[Ignition switch: ON]**	Approximately 5V
98	G	Accelerator pedal position sensor 2	**[Ignition switch: ON]** ● **Engine stopped** ● Accelerator pedal: Fully released	0.3 - 0.6V
			[Ignition switch: ON] ● **Engine stopped** ● Accelerator pedal: Fully depressed	1.95 - 2.4V
106	W	Accelerator pedal position sensor 1	**[Ignition switch: ON]** ● **Engine stopped** ● Accelerator pedal: Fully released	0.6 - 0.9V
			[Ignition switch: ON] ● **Engine stopped** ● Accelerator pedal: Fully depressed	3.9 - 4.7V

Diagnostic Procedure

BBS0032U

1. CHECK GROUND CONNECTIONS

1. Turn ignition switch OFF.
2. Loosen and retighten ground screws on the body.
   Refer to EC-133, "Ground Inspection" .

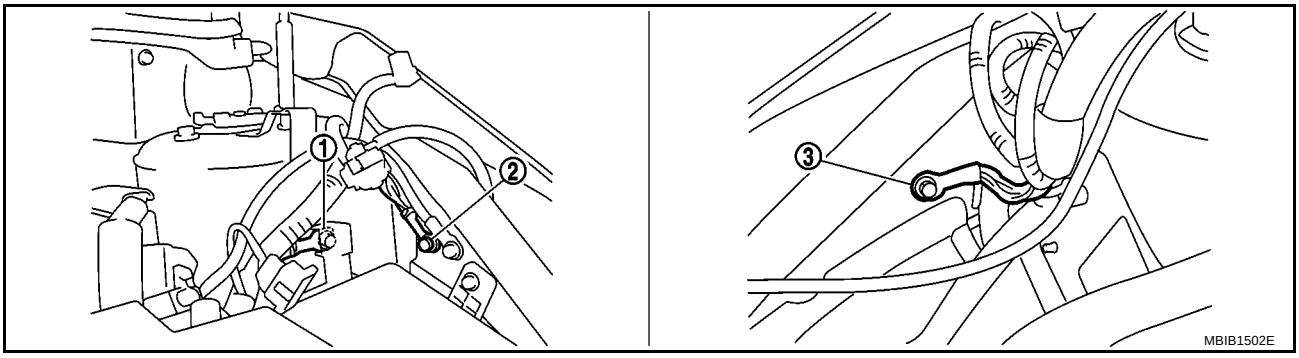

1. Body ground E44
2. Body ground E45
3. Body ground E28

OK or NG

OK >> GO TO 2.
NG >> Repair or replace ground connections.

2. CHECK APP SENSOR 2 POWER SUPPLY CIRCUIT-I

1. Disconnect accelerator pedal position (APP) sensor harness connector.
2. Turn ignition switch ON.

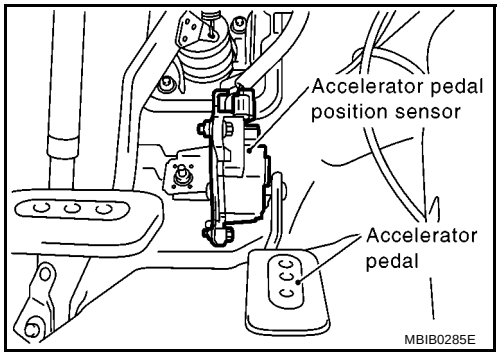

3. Check voltage between APP sensor terminal 5 and ground with CONSULT-II or tester.

Voltage: Approximately 5V

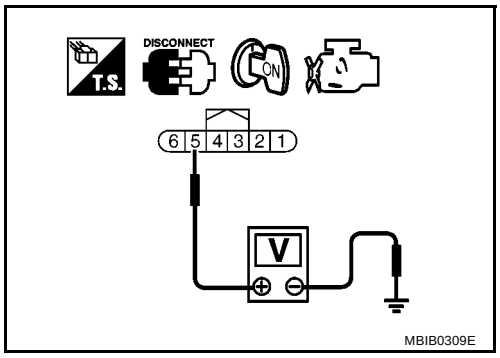

OK or NG

OK >> GO TO 8.
NG >> GO TO 3.

3. CHECK APP SENSOR 2 POWER SUPPLY CIRCUIT-II

1. Turn ignition switch OFF.
2. Disconnect ECM harness connector.
3. Check harness continuity between APP sensor terminal 5 and ECM terminal 91. Refer to Wiring Diagram.

Continuity should exist.

OK or NG

OK >> GO TO 5.
NG (LHD models)>>Repair open circuit.
NG (RHD models)>>GO TO 4.

4. DETECT MALFUNCTIONING PART

Check the following.

- Harness connectors M201, M8
- Harness connectors M1, E101
- Harness for open or short between accelerator pedal position sensor and ECM

>> Repair open circuit.

5. CHECK APP SENSOR 2 POWER SUPPLY CIRCUIT-III

Check harness for short to power and short to ground, between the following terminals.

ECM terminal	Sensor terminal	Reference Wiring Diagram
91	APP sensor terminal 5	EC-394
47	Electric throttle control actuator terminal 1	EC-404

OK or NG

OK >> GO TO 6.
NG >> Repair short to ground or short to power in harness or connectors.

6. CHECK THROTTLE POSITION SENSOR

Refer to EC-408, "Component Inspection" .

OK or NG

OK >> GO TO 14.
NG >> GO TO 7.

7. REPLACE ELECTRIC THROTTLE CONTROL ACTUATOR

1. Replace the electric throttle control actuator.
2. Perform EC-69, "Throttle Valve Closed Position Learning" .
3. Perform EC-69, "Idle Air Volume Learning" .

>> **INSPECTION END**

8. CHECK APP SENSOR 2 GROUND CIRCUIT FOR OPEN AND SHORT

1. Turn ignition switch OFF.
2. Disconnect ECM harness connector.
3. Check harness continuity between ECM terminal 83 and APP sensor terminal 1.
   Refer to Wiring Diagram.

   Continuity should exist.

4. Also check harness for short to ground and short to power.

OK or NG

OK >> GO TO 10.
NG (LHD models)>>Repair open circuit or short to ground or short to power in harness or connectors.
NG (RHD models)>>GO TO 9.

9. DETECT MALFUNCTIONING PART

Check the following.

- Harness connectors M8, M201
- Harness connectors M1, E101
- Harness for open or short between accelerator pedal position sensor and ECM

>> Repair open circuit or short to ground or short to power in harness or connectors.

10. CHECK APP SENSOR 2 INPUT SIGNAL CIRCUIT FOR OPEN AND SHORT

1. Check harness continuity between ECM terminal 98 and APP sensor terminal 6.
   Refer to Wiring Diagram.

   Continuity should exist.

2. Also check harness for short to ground and short to power.

OK or NG

OK >> GO TO 12.
NG (LHD models)>>Repair open circuit or short to ground or short to power in harness or connectors.
NG (RHD models)>>GO TO 11.

11. DETECT MALFUNCTIONING PART

Check the following.

- Harness connectors M8, M201
- Harness connectors M1, E101
- Harness for open or short between ECM and accelerator pedal position sensor

>> Repair open circuit or short to ground or short to power in harness or connectors.

12. CHECK APP SENSOR

Refer to EC-400, "Component Inspection" .

OK or NG

OK >> GO TO 14.
NG >> GO TO 13.

13. REPLACE ACCELERATOR PEDAL ASSEMBLY

1. Replace the accelerator pedal assembly.
2. Perform EC-69, "Accelerator Pedal Released Position Learning" .
3. Perform EC-69, "Throttle Valve Closed Position Learning" .
4. Perform EC-69, "Idle Air Volume Learning" .

>> **INSPECTION END**

14. CHECK INTERMITTENT INCIDENT

Refer to EC-127, "TROUBLE DIAGNOSIS FOR INTERMITTENT INCIDENT" .

>> **INSPECTION END**

Component Inspection

BBS0032V

ACCELERATOR PEDAL POSITION SENSOR

1. Reconnect all harness connectors disconnected.
2. Turn ignition switch ON.

3. Check voltage between ECM terminals 106 (APP sensor 1 signal), 98 (APP sensor 2 signal) and ground under the following conditions.

Terminal	Accelerator pedal	Voltage
106 (Accelerator pedal position sensor 1)	Fully released	0.6 - 0.9V
	Fully depressed	3.9 - 4.7V
98 (Accelerator pedal position sensor 2)	Fully released	0.3 - 0.6V
	Fully depressed	1.95 - 2.4V

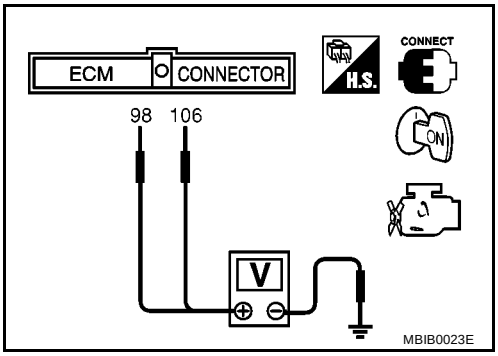

4. If NG, replace accelerator pedal assembly and go to the next step.
5. Perform EC-69, "Accelerator Pedal Released Position Learning" .
6. Perform EC-69, "Throttle Valve Closed Position Learning" .
7. Perform EC-69, "Idle Air Volume Learning" .

Removal and Installation

BBS0032W

ACCELERATOR PEDAL

Refer to ACC-2, "ACCELERATOR CONTROL SYSTEM" .

DTC P2135 TP SENSOR

PFP:16119

Component Description

BBS0032X

Electric throttle control actuator consists of throttle control motor, throttle position sensor, etc. The throttle position sensor responds to the throttle valve movement.
The throttle position sensor has the two sensors. These sensors are a kind of potentiometers which transform the throttle valve position into output voltage, and emit the voltage signal to the ECM. In addition, these sensors detect the opening and closing speed of the throttle valve and feed the voltage signals to the ECM. The ECM judges the current opening angle of the throttle valve from these signals and the ECM controls the throttle control motor to make the throttle valve opening angle properly in response to driving condition.

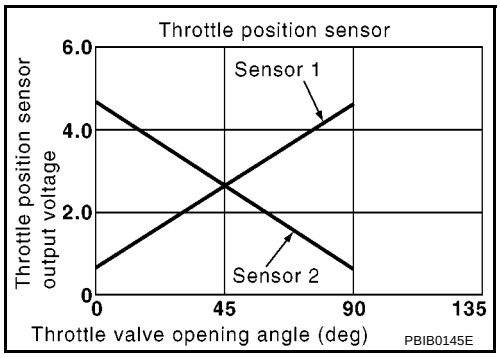

CONSULT-II Reference Value in Data Monitor Mode

BBS0032Y

Specification data are reference values.

MONITOR ITEM	CONDITION		SPECIFICATION
THRTL SEN 1 THRTL SEN 2*	● Ignition switch: ON (Engine stopped)	Accelerator pedal: Fully released	More than 0.36V
	● Shift lever: 1st	Accelerator pedal: Fully depressed	Less than 4.75V

*: Throttle position sensor 2 signal is converted by ECM internally. Thus, it differs from ECM terminal voltage signal.

On Board Diagnosis Logic

BBS0032Z

This self-diagnosis has the one trip detection logic.

DTC No.	Trouble diagnosis name	DTC detecting condition	Possible cause
P2135 2135	Throttle position sensor circuit range/performance	Rationally incorrect voltage is sent to ECM compared with the signals from TP sensor 1 and TP sensor 2.	● Harness or connector (TP sensor 1 and 2 circuit is open or shorted.) (APP sensor 2 circuit is shorted.) ● Electric throttle control actuator (TP sensor 1 and 2) ● Accelerator pedal position sensor (APP sensor 2)

FAIL-SAFE MODE

When the malfunction is detected, the ECM enters fail-safe mode and the MI lights up.

Engine operation condition in fail-safe mode
The ECM controls the electric throttle control actuator in regulating the throttle opening in order for the idle position to be within +10 degrees. The ECM regulates the opening speed of the throttle valve to be slower than the normal condition. So, the acceleration will be poor.

DTC Confirmation Procedure

BBS00330

NOTE:
If DTC Confirmation Procedure has been previously conducted, always turn ignition switch OFF and wait at least 10 seconds before conducting the next test.
TESTING CONDITION:
Before performing the following procedure, confirm that battery voltage is more than 10V at idle.

WITH CONSULT-II

1. Turn ignition switch ON.
2. Select “DATA MONITOR” mode with CONSULT-II.
3. Start engine and let it idle for 1 second.
4. If DTC is detected, go to EC-405, "Diagnostic Procedure" .

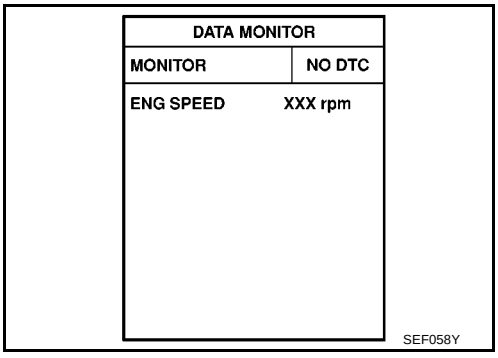

WITH GST

Follow the procedure “WITH CONSULT-II” above.

Wiring Diagram

BBS00331

EC-TPS3-01

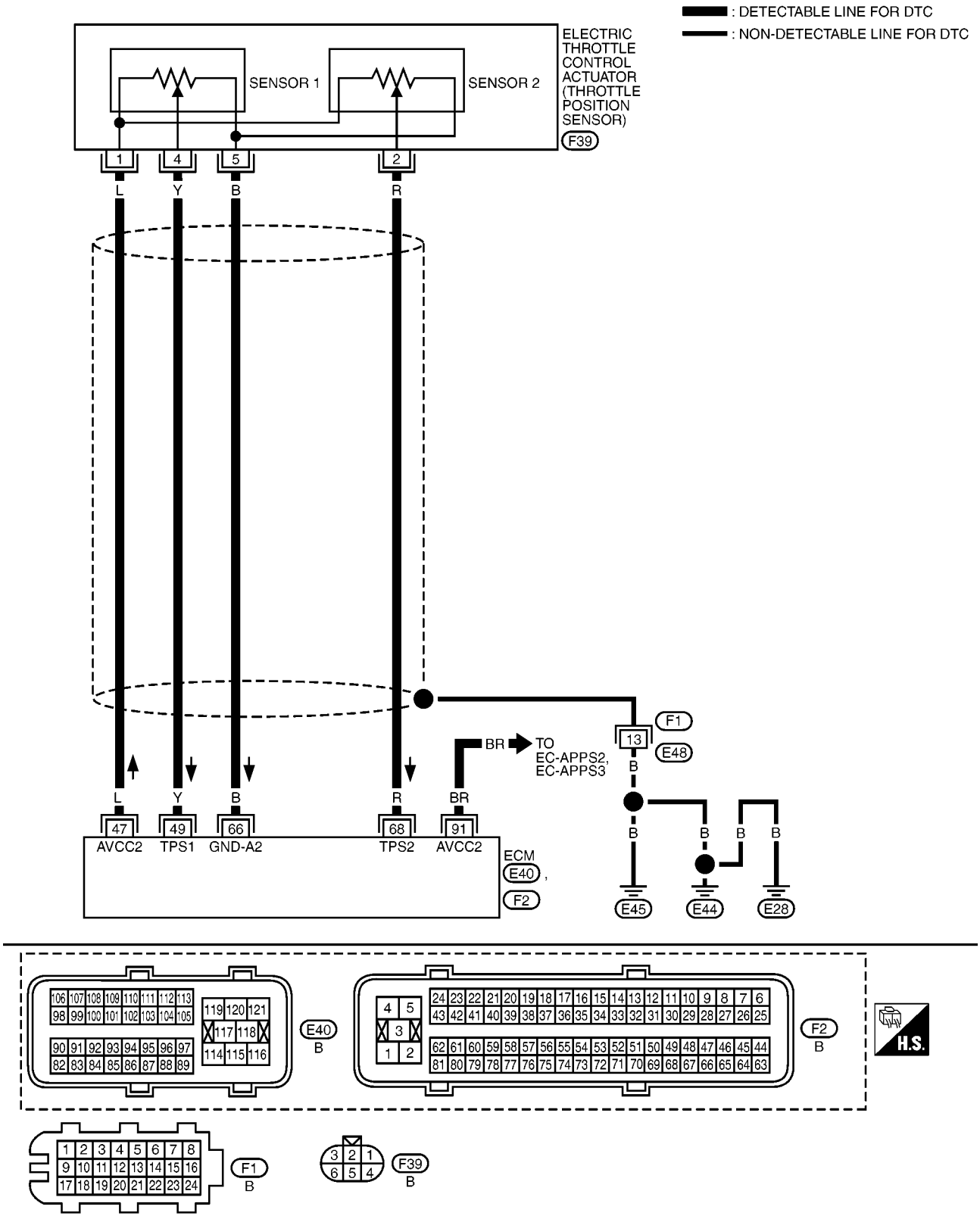

MBWA1533E

Specification data are reference values and are measured between each terminal and ground.

CAUTION:
Do not use ECM ground terminals when measuring input/output voltage. Doing so may result in damage to the ECM's transistor. Use a ground other than ECM terminals, such as the ground.

TERMINAL NO.	WIRE COLOR	ITEM	CONDITION	DATA (DC Voltage)
47	L	Sensor power supply (Throttle position sensor)	**[Ignition switch: ON]**	Approximately 5V
49	Y	Throttle position sensor 1	**[Ignition switch: ON]** ● **Engine stopped** ● Shift lever position: 1st ● Accelerator pedal: Fully released	More than 0.36V
			[Ignition switch: ON] ● **Engine stopped** ● Shift lever position: 1st ● Accelerator pedal: Fully depressed	Less than 4.75V
66	B	Sensor ground (Throttle position sensor)	**[Engine is running]** ● **Warm-up condition** ● Idle speed	Approximately 0V
68	R	Throttle position sensor 2	**[Ignition switch: ON]** ● **Engine stopped** ● Shift lever position: 1st ● Accelerator pedal: Fully released	Less than 4.75V
			[Ignition switch: ON] ● **Engine stopped** ● Shift lever position: 1st ● Accelerator pedal: Fully depressed	More than 0.36V
91	BR	Sensor power supply (APP sensor 2)	**[Ignition switch: ON]**	Approximately 5V

Diagnostic Procedure

BBS00332

1. CHECK GROUND CONNECTIONS

1. Turn ignition switch OFF.
2. Loosen and retighten ground screws on the body.
   Refer to EC-133, "Ground Inspection" .

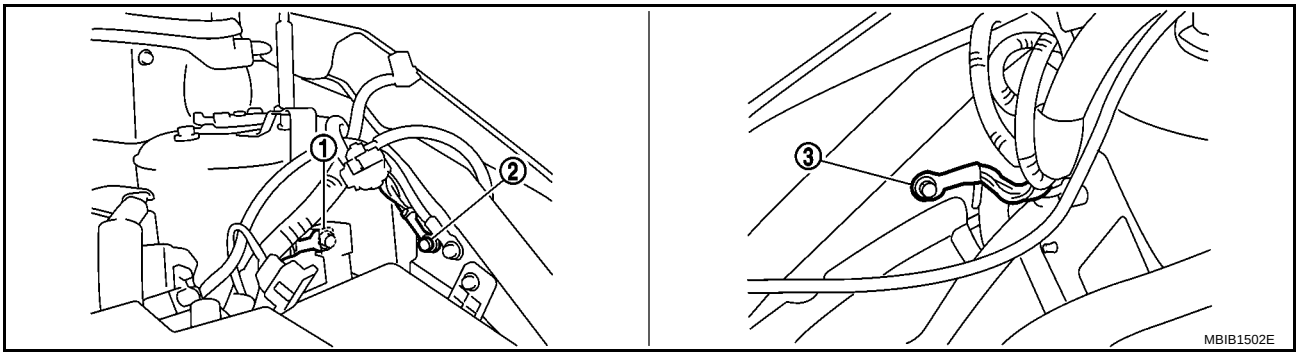

1. Body ground E44
2. Body ground E45
3. Body ground E28

OK or NG

OK >> GO TO 2.
NG >> Repair or replace ground connections.

2. CHECK THROTTLE POSITION SENSOR POWER SUPPLY CIRCUIT

1. Disconnect electric throttle control actuator harness connector.
2. Turn ignition switch ON.

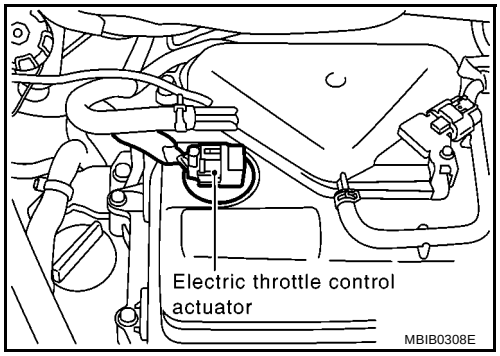

3. Check voltage between electric throttle control actuator terminal 1 and ground with CONSULT-II or tester.

Voltage: Approximately 5V

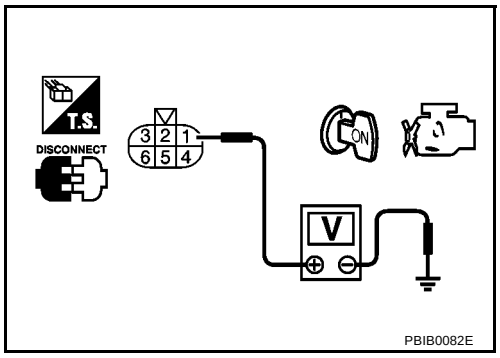

OK or NG

OK >> GO TO 7.
NG >> GO TO 3.

3. CHECK THROTTLE POSITION SENSOR POWER SUPPLY CIRCUIT-II

1. Turn ignition switch OFF.
2. Disconnect ECM harness connector.
3. Check harness continuity between electric throttle control actuator terminal 1 and ECM terminal 47. Refer to Wiring Diagram.

Continuity should exist.

OK or NG

OK >> GO TO 4.
NG >> Repair open circuit.

4. CHECK THROTTLE POSITION SENSOR POWER SUPPLY CIRCUIT-III

Check harness for short to power and short to ground, between the following terminals.

ECM terminal	Sensor terminal	Reference Wiring Diagram
47	Electric throttle control actuator terminal 1	EC-404
91	APP sensor terminal 5	EC-394

OK or NG

OK >> GO TO 5.
NG >> Repair short to ground or short to power in harness or connectors.

5. CHECK APP SENSOR

Refer to EC-400, "Component Inspection" .

OK or NG

OK >> GO TO 11
NG >> GO TO 6.

6. REPLACE ACCELERATOR PEDAL ASSEMBLY

1. Replace accelerator pedal assembly.
2. Perform EC-69, "Accelerator Pedal Released Position Learning" .
3. Perform EC-69, "Throttle Valve Closed Position Learning" .
4. Perform EC-69, "Idle Air Volume Learning" .

>> **INSPECTION END**

7. CHECK THROTTLE POSITION SENSOR GROUND CIRCUIT FOR OPEN AND SHORT

1. Turn ignition switch OFF.
2. Disconnect ECM harness connector.
3. Check harness continuity between ECM terminal 66 and electric throttle control actuator terminal 5.
   Refer to Wiring Diagram.

   Continuity should exist.

4. Also check harness for short to ground and short to power.

OK or NG

OK >> GO TO 8.
NG >> Repair open circuit or short to ground or short to power in harness or connectors.

8. CHECK THROTTLE POSITION SENSOR INPUT SIGNAL CIRCUIT FOR OPEN AND SHORT

1. Check harness continuity between ECM terminal 49 and electric throttle control actuator terminal 4, ECM terminal 68 and electric throttle control actuator terminal 2.
   Refer to Wiring Diagram.

   Continuity should exist.

2. Also check harness for short to ground and short to power.

OK or NG

OK >> GO TO 9.
NG >> Repair open circuit or short to ground or short to power in harness or connectors.

9. CHECK THROTTLE POSITION SENSOR

Refer to EC-408, "Component Inspection" .

OK or NG

OK >> GO TO 11.
NG >> GO TO 10.

10. REPLACE ELECTRIC THROTTLE CONTROL ACTUATOR

1. Replace the electric throttle control actuator.
2. Perform EC-69, "Throttle Valve Closed Position Learning" .
3. Perform EC-69, "Idle Air Volume Learning" .

>> **INSPECTION END**

11. CHECK INTERMITTENT INCIDENT

Refer to EC-127, "TROUBLE DIAGNOSIS FOR INTERMITTENT INCIDENT" .

>> **INSPECTION END**

Component Inspection

BBS00333

THROTTLE POSITION SENSOR

1. Reconnect all harness connectors disconnected.
2. Perform EC-69, "Throttle Valve Closed Position Learning" .
3. Turn ignition switch ON.
4. Set shift lever to 1st position.
5. Check voltage between ECM terminals 49 (TP sensor 1 signal), 68 (TP sensor 2 signal) and ground under the following conditions.

Terminal	Accelerator pedal	Voltage
49 (Throttle position sensor 1)	Fully released	More than 0.36V
	Fully depressed	Less than 4.75V
68 (Throttle position sensor 2)	Fully released	Less than 4.75V
	Fully depressed	More than 0.36V

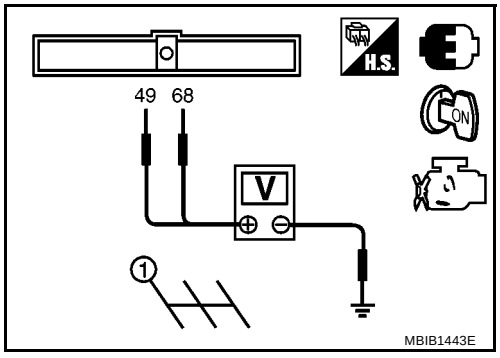

6. If NG, replace electric throttle control actuator and go to the next step.
7. Perform EC-69, "Throttle Valve Closed Position Learning" .
8. Perform EC-69, "Idle Air Volume Learning" .

Removal and Installation

BBS00334

ELECTRIC THROTTLE CONTROL ACTUATOR

Refer to EM-18, "AIR CLEANER AND AIR DUCT" .

DTC P2138 APP SENSOR

PFP:18002

Component Description

BBS00335

The accelerator pedal position sensor is installed on the upper end of the accelerator pedal assembly. The sensor detects the accelerator position and sends a signal to the ECM.
Accelerator pedal position sensor has two sensors. These sensors are a kind of potentiometers which transform the accelerator pedal position into output voltage, and emit the voltage signal to the ECM. In addition, these sensors detect the opening and closing speed of the accelerator pedal and feed the voltage signals to the ECM. The ECM judges the current opening angle of the accelerator pedal from these signals and controls the throttle control motor based on these signals.

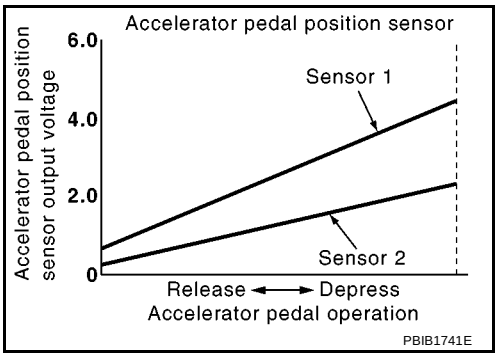

Idle position of the accelerator pedal is determined by the ECM receiving the signal from the accelerator pedal position sensor. The ECM uses this signal for the engine operation such as fuel cut.

CONSULT-II Reference Value in Data Monitor Mode

BBS00336

Specification data are reference values.

MONITOR ITEM	CONDITION		SPECIFICATION
ACCEL SEN 1	● Ignition switch: ON (Engine stopped)	Accelerator pedal: Fully released	0.6 - 0.9V
		Accelerator pedal: Fully depressed	4.0 - 4.8V
ACCEL SEN 2*	● Ignition switch: ON (Engine stopped)	Accelerator pedal: Fully released	0.6 - 0.9V
		Accelerator pedal: Fully depressed	3.9 - 4.8V
CLSD THL POS	● Ignition switch: ON (Engine stopped)	Accelerator pedal: Fully released	ON
		Accelerator pedal: Slightly depressed	OFF

*: Accelerator pedal position sensor 2 signal is converted by ECM internally. Thus, it differs from ECM terminal voltage.

On Board Diagnosis Logic

BBS00337

This self-diagnosis has the one trip detection logic.

NOTE:
If DTC P2138 is displayed with DTC P1229, first perform trouble diagnosis for DTC P1229.
Refer to EC-363, "DTC P1229 SENSOR POWER SUPPLY" .

DTC No.	Trouble diagnosis name	DTC detecting condition	Possible cause
P2138 2138	Accelerator pedal position sensor circuit range/performance	Rationally incorrect voltage is sent to ECM compared with the signals from APP sensor 1 and APP sensor 2.	● Harness or connector (APP sensor 1 and 2 circuit is open or shorted.) (TP sensor circuit is shorted.) ● Accelerator pedal position sensor (APP sensor 1 and 2) ● Electric throttle control actuator (TP sensor 1 and 2)

FAIL-SAFE MODE

When the malfunction is detected, the ECM enters fail-safe mode and the MI lights up.

Engine operating condition in fail-safe mode
The ECM controls the electric throttle control actuator in regulating the throttle opening in order for the idle position to be within +10 degrees. The ECM regulates the opening speed of the throttle valve to be slower than the normal condition. So, the acceleration will be poor.

DTC Confirmation Procedure

BBS00338

NOTE:
If DTC Confirmation Procedure has been previously conducted, always turn ignition switch OFF and wait at least 10 seconds before conducting the next test.
TESTING CONDITION:
Before performing the following procedure, confirm that battery voltage is more than 10V at idle.

WITH CONSULT-II

1. Turn ignition switch ON.
2. Select “DATA MONITOR” mode with CONSULT-II.
3. Start engine and let it idle for 1 second.
4. If DTC is detected, go to EC-414, "Diagnostic Procedure" .

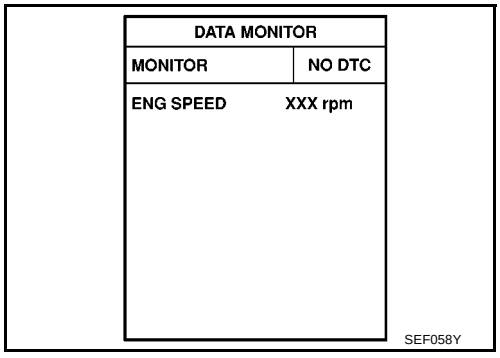

WITH GST

Follow the procedure “WITH CONSULT-II” above.

Wiring Diagram
LHD MODELS

BBS00339

EC-APPS3-01

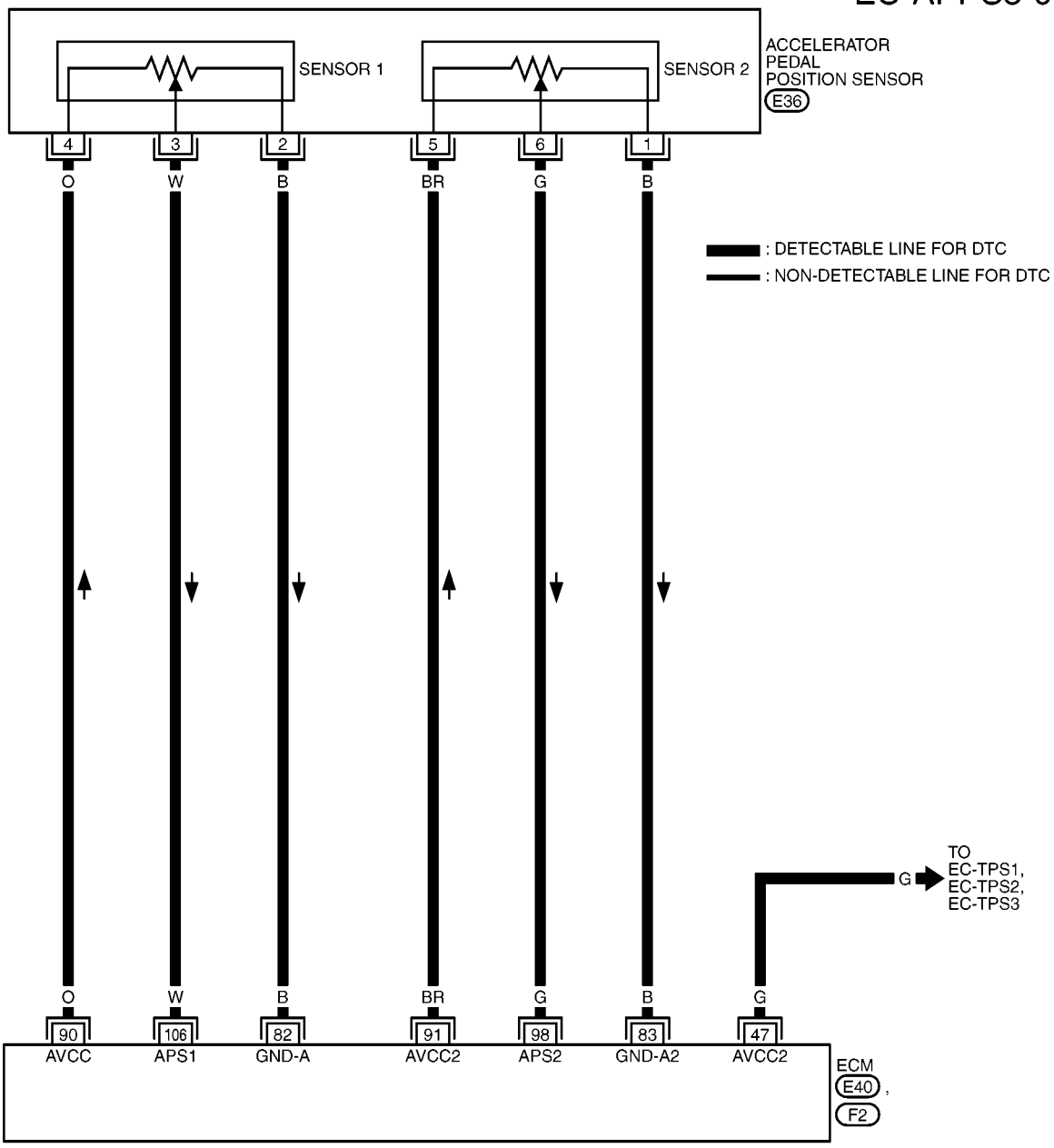

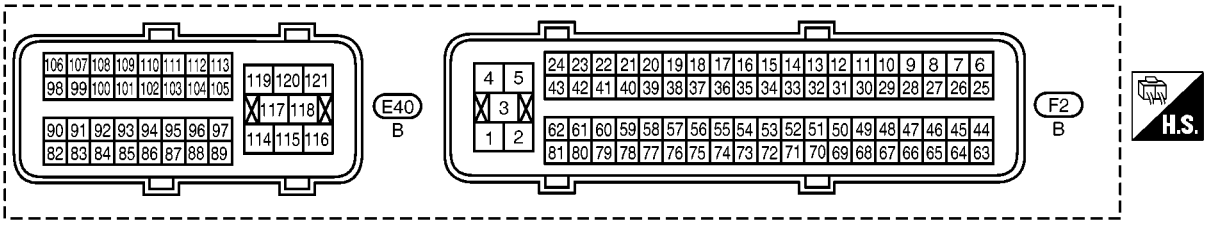

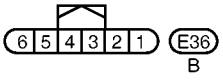

MBWA1534E

Specification data are reference values and are measured between each terminal and ground.

CAUTION:

Do not use ECM ground terminals when measuring input/output voltage. Doing so may result in damage to the ECM's transistor. Use a ground other than ECM terminals, such as the ground.

TERMINAL NO.	WIRE COLOR	ITEM	CONDITION	DATA (DC Voltage)
47	G	Sensor power supply (Throttle position sensor)	**[Ignition switch: ON]**	Approximately 5V
82	B	Sensor ground (APP sensor 1)	**[Engine is running]** ● **Warm-up condition** ● Idle speed	Approximately 0V
83	B	Sensor ground (APP sensor 2)	**[Ignition switch: ON]** ● **Warm-up condition** ● Idle speed	Approximately 0V
90	O	Sensor power supply (APP sensor 1)	**[Ignition switch: ON]**	Approximately 5V
91	BR	Sensor power supply (APP sensor 2)	**[Ignition switch: ON]**	Approximately 5V
98	G	Accelerator pedal position sensor 2	**[Ignition switch: ON]** ● **Engine stopped** ● Accelerator pedal: Fully released	0.3 - 0.6V
			[Ignition switch: ON] ● **Engine stopped** ● Accelerator pedal: Fully depressed	1.95 - 2.4V
106	W	Accelerator pedal position sensor 1	**[Ignition switch: ON]** ● **Engine stopped** ● Accelerator pedal: Fully released	0.6 - 0.9V
			[Ignition switch: ON] ● **Engine stopped** ● Accelerator pedal: Fully depressed	3.9 - 4.7V

RHD MODELS

EC-APPS3-02

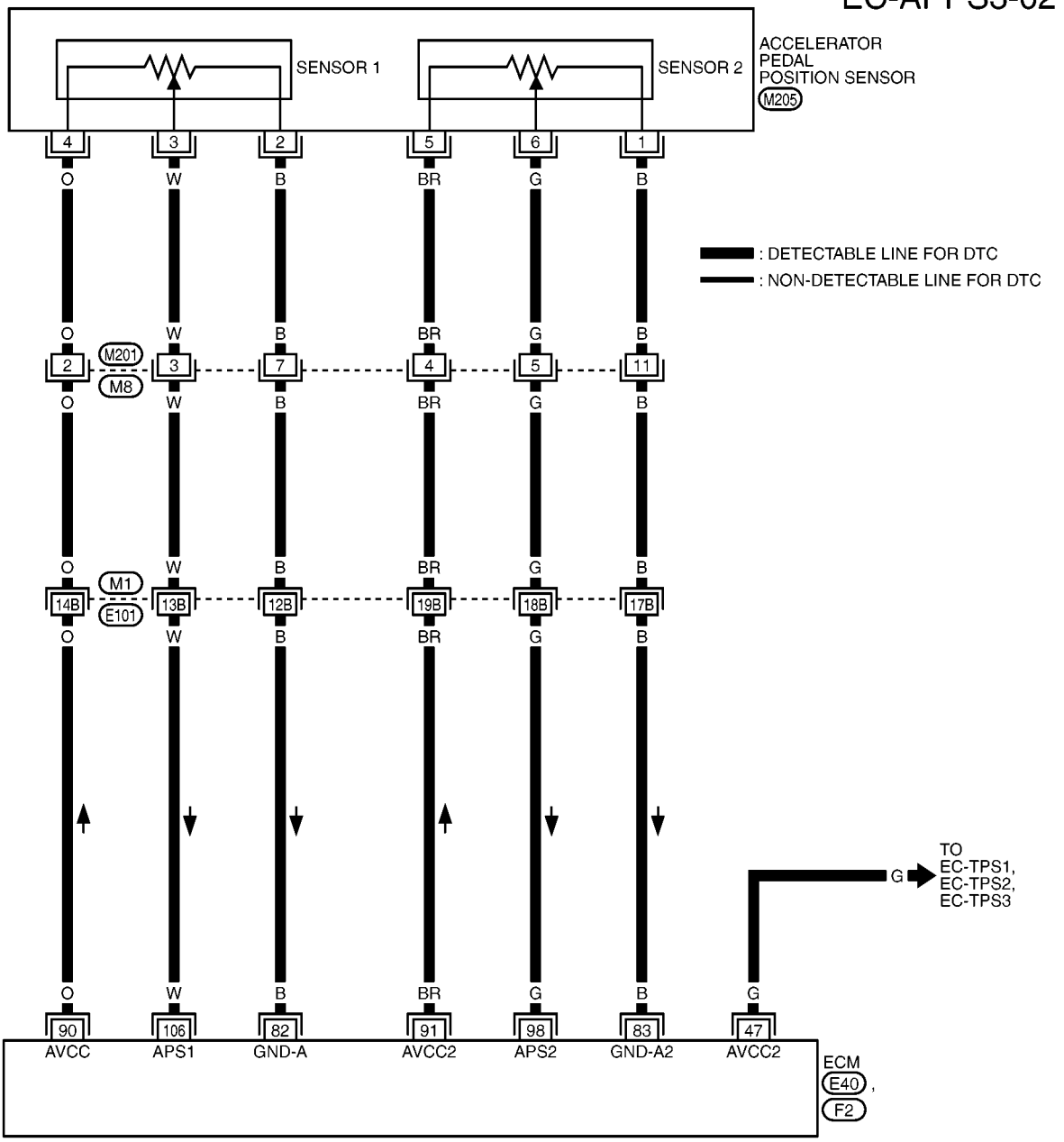

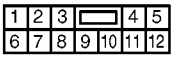

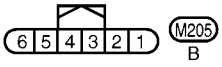

REFER TO THE FOLLOWING.
M1 - SUPER MULTIPLE JUNCTION (SMJ)

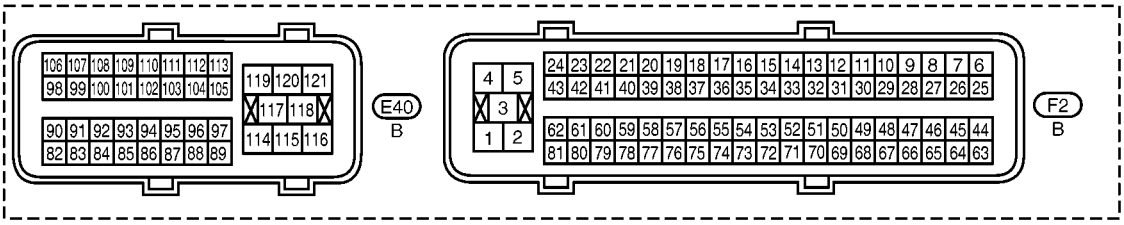

MBWA1535E

Specification data are reference values and are measured between each terminal and ground.

CAUTION:

Do not use ECM ground terminals when measuring input/output voltage. Doing so may result in damage to the ECM's transistor. Use a ground other than ECM terminals, such as the ground.

TERMINAL NO.	WIRE COLOR	ITEM	CONDITION	DATA (DC Voltage)
47	G	Sensor power supply (Throttle position sensor)	**[Ignition switch: ON]**	Approximately 5V
82	B	Sensor ground (APP sensor 1)	**[Engine is running]** ● **Warm-up condition** ● Idle speed	Approximately 0V
83	B	Sensor ground (APP sensor 2)	**[Ignition switch: ON]** ● **Warm-up condition** ● Idle speed	Approximately 0V
90	O	Sensor power supply (APP sensor 1)	**[Ignition switch: ON]**	Approximately 5V
91	BR	Sensor power supply (APP sensor 2)	**[Ignition switch: ON]**	Approximately 5V
98	G	Accelerator pedal position sensor 2	**[Ignition switch: ON]** ● **Engine stopped** ● Accelerator pedal: Fully released	0.3 - 0.6V
			[Ignition switch: ON] ● **Engine stopped** ● Accelerator pedal: Fully depressed	1.95 - 2.4V
106	W	Accelerator pedal position sensor 1	**[Ignition switch: ON]** ● **Engine stopped** ● Accelerator pedal: Fully released	0.6 - 0.9V
			[Ignition switch: ON] ● **Engine stopped** ● Accelerator pedal: Fully depressed	3.9 - 4.7V

Diagnostic Procedure

BBS0033A

1. CHECK GROUND CONNECTIONS

1. Turn ignition switch OFF.
2. Loosen and retighten ground screws on the body.
   Refer to EC-133, "Ground Inspection" .

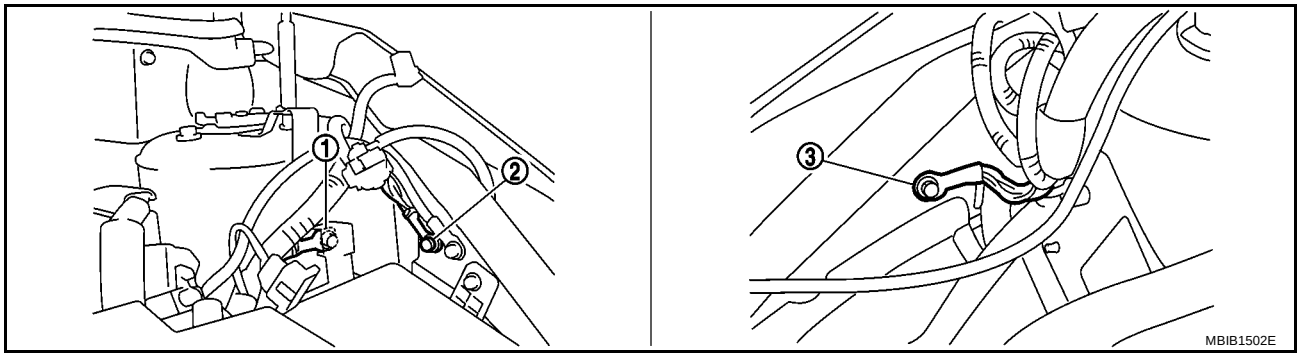

1. Body ground E44
2. Body ground E45
3. Body ground E28

OK or NG

OK >> GO TO 2.
NG >> Repair or replace ground connections.

2. CHECK APP SENSOR 1 POWER SUPPLY CIRCUIT

1. Disconnect accelerator pedal position (APP) sensor harness connector.
2. Turn ignition switch ON.

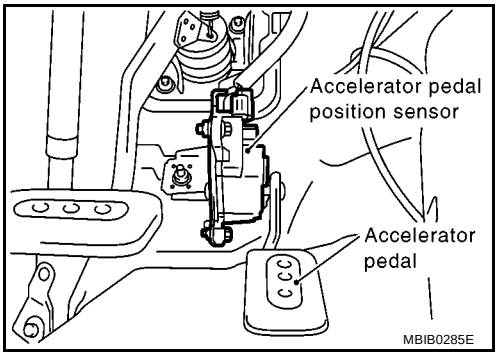

3. Check voltage between APP sensor terminal 4 and ground with CONSULT-II or tester.

Voltage: Approximately 5V

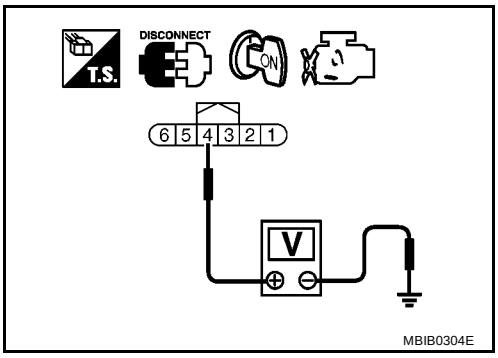

OK or NG

OK >> GO TO 4.
NG (LHD models)>>Repair open circuit or short to ground or short to power in harness or connectors.
NG (RHD models)>>GO TO 3.

3. DETECT MALFUNCTIONING PART

Check the following.

- Harness connectors M1, E101
- Harness connectors M8, M201
- Harness for open or short between ECM and accelerator pedal position sensor

>> Repair open circuit or short to ground or short to power in harness or connectors.

4. CHECK APP SENSOR 2 POWER SUPPLY CIRCUIT-I

Check voltage between APP sensor terminal 5 and ground with CONSULT-II or tester.

Voltage: Approximately 5V

OK or NG

OK >> GO TO 10.
NG >> GO TO 5.

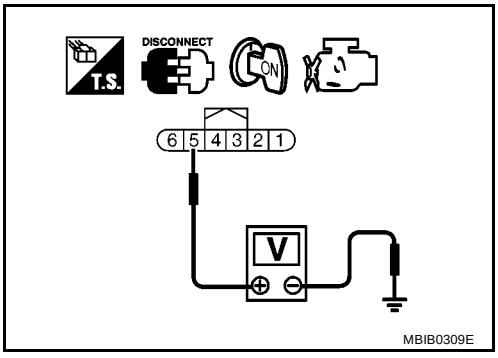

5. CHECK APP SENSOR 2 POWER SUPPLY CIRCUIT-II

1. Turn ignition switch OFF.
2. Disconnect ECM harness connector.
3. Check harness continuity between APP sensor terminal 5 and ECM terminal 91.
   Refer to Wiring Diagram.

Continuity should exist.

OK or NG

OK >> GO TO 7.
NG (LHD models)>>Repair open circuit.
NG (RHD models)>>GO TO 6.

6. DETECT MALFUNCTIONING PART

Check the following.

- Harness connectors M1, E101
- Harness connectors M8, M201
- Harness for open or short between accelerator pedal position sensor and ECM

>> Repair open circuit.

7. CHECK APP SENSOR 2 POWER SUPPLY CIRCUIT-III

Check harness for short to power and short to ground, between the following terminals.

ECM terminal	Sensor terminal	Reference Wiring Diagram
91	APP sensor terminal 5	EC-411
47	Electric throttle control actuator terminal 1	EC-404

OK or NG

OK >> GO TO 8.
NG >> Repair short to ground or short to power in harness or connectors.

8. CHECK THROTTLE POSITION SENSOR

Refer to EC-408, "Component Inspection" .

OK or NG

OK >> GO TO 16.
NG >> GO TO 9.

9. REPLACE ELECTRIC THROTTLE CONTROL ACTUATOR

1. Replace the electric throttle control actuator.
2. Perform EC-69, "Throttle Valve Closed Position Learning" .
3. Perform EC-69, "Idle Air Volume Learning" .

>> **INSPECTION END**

10. CHECK APP SENSOR GROUND CIRCUIT FOR OPEN AND SHORT

1. Turn ignition switch OFF.
2. Disconnect ECM harness connector.
3. Check harness continuity between ECM terminal 82 and APP sensor terminal 2, ECM terminal 83 and APP sensor terminal 1.
   Refer to Wiring Diagram.

   Continuity should exist.

4. Also check harness for short to ground and short to power.

OK or NG

OK >> GO TO 12.
NG (LHD models)>>Repair open circuit or short to ground or short to power in harness or connectors.
NG (RHD models)>>GO TO 11.

11. DETECT MALFUNCTIONING PART

Check the following.

- Harness connectors M1, E101
- Harness connectors M8, M201
- Harness for open or short between ECM and accelerator pedal position sensor

>> Repair open circuit or short to ground or short to power in harness or connectors.

12. CHECK APP SENSOR INPUT SIGNAL CIRCUIT FOR OPEN AND SHORT

1. Check harness continuity between ECM terminal 106 and APP sensor terminal 3, ECM terminal 98 and APP sensor terminal 6.
   Refer to Wiring Diagram.

   Continuity should exist.

2. Also check harness for short to ground and short to power.

OK or NG

OK >> GO TO 14.
NG (LHD models)>>Repair open circuit or short to ground or short to power in harness or connectors.
NG (RHD models)>>GO TO 13.

13. DETECT MALFUNCTIONING PART

Check the following.

- Harness connectors M1, E101
- Harness connectors M8, M201
- Harness for open or short between ECM and accelerator pedal position sensor

>> Repair open circuit or short to ground or short to power in harness or connectors.

14. CHECK APP SENSOR

Refer to EC-418, "Component Inspection" .

OK or NG

OK >> GO TO 16.
NG >> GO TO 15.

15. REPLACE ACCELERATOR PEDAL ASSEMBLY

1. Replace the accelerator pedal assembly.
2. Perform EC-69, "Accelerator Pedal Released Position Learning" .
3. Perform EC-69, "Throttle Valve Closed Position Learning" .
4. Perform EC-69, "Idle Air Volume Learning" .

>> **INSPECTION END**

16. CHECK INTERMITTENT INCIDENT

Refer to EC-127, "TROUBLE DIAGNOSIS FOR INTERMITTENT INCIDENT" .

>> **INSPECTION END**

Component Inspection

BBS0033B

ACCELERATOR PEDAL POSITION SENSOR

1. Reconnect all harness connectors disconnected.
2. Turn ignition switch ON.
3. Check voltage between ECM terminals 106 (APP sensor 1 signal), 98 (APP sensor 2 signal) and ground under the following conditions.

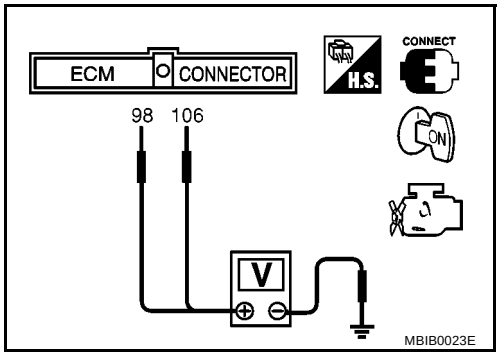

Terminal	Accelerator pedal	Voltage
106 (Accelerator pedal position sensor 1)	Fully released	0.6 - 0.9V
	Fully depressed	3.9 - 4.7V
98 (Accelerator pedal position sensor 2)	Fully released	0.3 - 0.6V
	Fully depressed	1.95 - 2.4V

4. If NG, replace accelerator pedal assembly and go to the next step.
5. Perform EC-69, "Accelerator Pedal Released Position Learning" .
6. Perform EC-69, "Throttle Valve Closed Position Learning" .
7. Perform EC-69, "Idle Air Volume Learning" .

Removal and Installation

BBS0033C

ACCELERATOR PEDAL

Refer to ACC-2, "ACCELERATOR CONTROL SYSTEM" .

ELECTRICAL LOAD SIGNAL

PFP:25350

Description

BBS0033Y

The electrical load signal (Headlamp switch signal, rear window defogger switch signal, etc.) is transferred through the CAN communication line from IPDM E/R to ECM.

CONSULT-II Reference Value in Data Monitor Mode

BBS0033Z

Specification data are reference values.

MONITOR ITEM	CONDITION		SPECIFICATION
LOAD SIGNAL	● Ignition switch: ON	Rear window defogger switch is ON and/or lighting switch is 2nd.	ON
		Rear window defogger switch is OFF and lighting switch is OFF.	OFF
HEATER FAN SW	● Engine: After warming up, idle the engine	Heater fan: Operating	ON
		Heater fan: Not operating	OFF

Diagnostic Procedure

BBS00340

1. CHECK LOAD SIGNAL CIRCUIT OVERALL FUNCTION-I

1. Turn ignition switch ON.
2. Connect CONSULT-II and select “DATA MONITOR” mode.
3. Select “LOAD SIGNAL” and check indication under the following conditions.

Condition	Indication
Rear window defogger switch: ON	ON
Rear window defogger switch: OFF	OFF

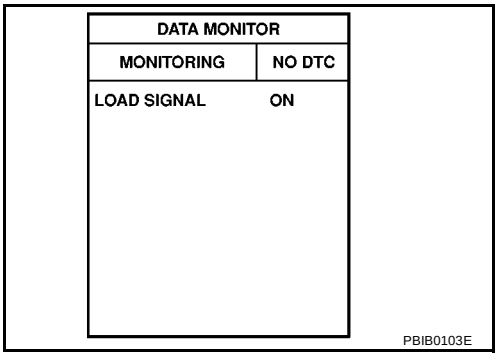

OK or NG

OK >> GO TO 2.
NG >> GO TO 4.

2. CHECK LOAD SIGNAL CIRCUIT OVERALL FUNCTION-II

Check “LOAD SIGNAL” indication under the following conditions.

Condition	Indication
Lighting switch: 2nd position	ON
Lighting switch: OFF	OFF

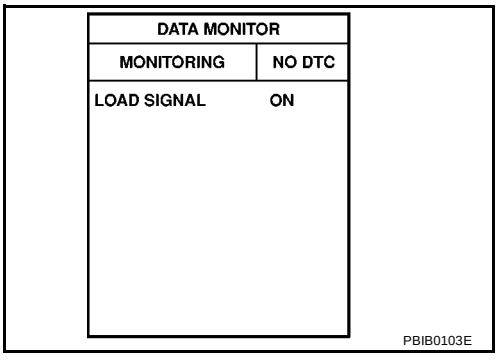

OK or NG

OK >> GO TO 3.
NG >> GO TO 5.

3. CHECK HEATER FAN SIGNAL CIRCUIT OVERALL FUNCTION

With CONSULT-II

Check “HEATER FAN SW” in “DATA MONITOR” mode with CONSULT-II under the following conditions.

Condition	HEATER FAN SW
Heater fan control switch: ON	ON
Heater fan control switch: OFF	OFF

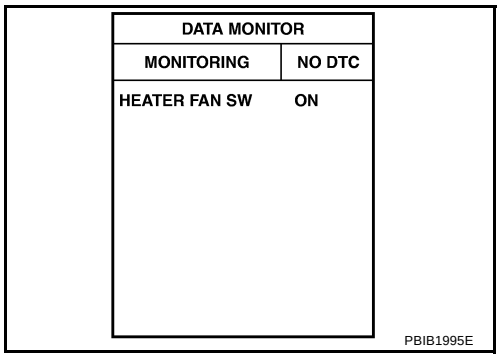

OK or NG

OK >> **INSPECTION END**
NG >> GO TO 6.

4. CHECK REAR WINDOW DEFOGGER SYSTEM

Refer to GW-12, "REAR WINDOW DEFOGGER" .

>> **INSPECTION END**

5. CHECK HEADLAMP SYSTEM

Refer to LT-7, "HEADLAMP -CONVENTIONAL TYPE-" or LT-35, "HEADLAMP - DAYTIME LIGHT SYSTEM - " .

>> **INSPECTION END**

6. CHECK HEATER FAN CONTROL SYSTEM

Refer to ATC-26, "TROUBLE DIAGNOSIS" or MTC-23, "TROUBLE DIAGNOSIS" .

>> **INSPECTION END**

FUEL INJECTOR

PFP:16600

Component Description

BBS0033I

The fuel injector is a small, precise solenoid valve. When the ECM supplies a ground to the fuel injector circuit, the coil in the fuel injector is energized. The energized coil pulls the ball valve back and allows fuel to flow through the fuel injector into the intake manifold. The amount of fuel injected depends upon the injection pulse duration. Pulse duration is the length of time the fuel injector remains open. The ECM controls the injection pulse duration based on engine fuel needs.

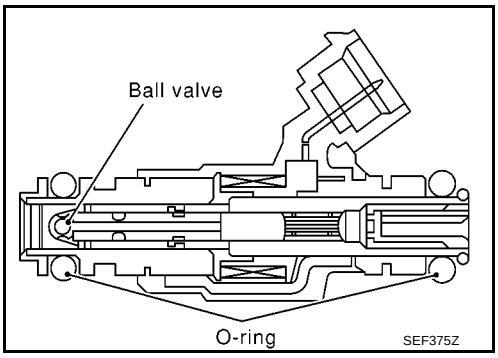

CONSULT-II Reference Value in Data Monitor Mode

BBS0033J

Specification data are reference values.

MONITOR ITEM	CONDITION		SPECIFICATION
B/FUEL SCHDL	● See EC-117, "TROUBLE DIAGNOSIS - SPECIFICATION VALUE" .		
INJ PULSE-B1	● Engine: After warming up ● Shift lever: Neutral ● Air conditioner switch: OFF ● No load	Idle	2.0 - 3.0 msec
		2,000 rpm	1.9 - 2.9 msec

Wiring Diagram

BBS0033K

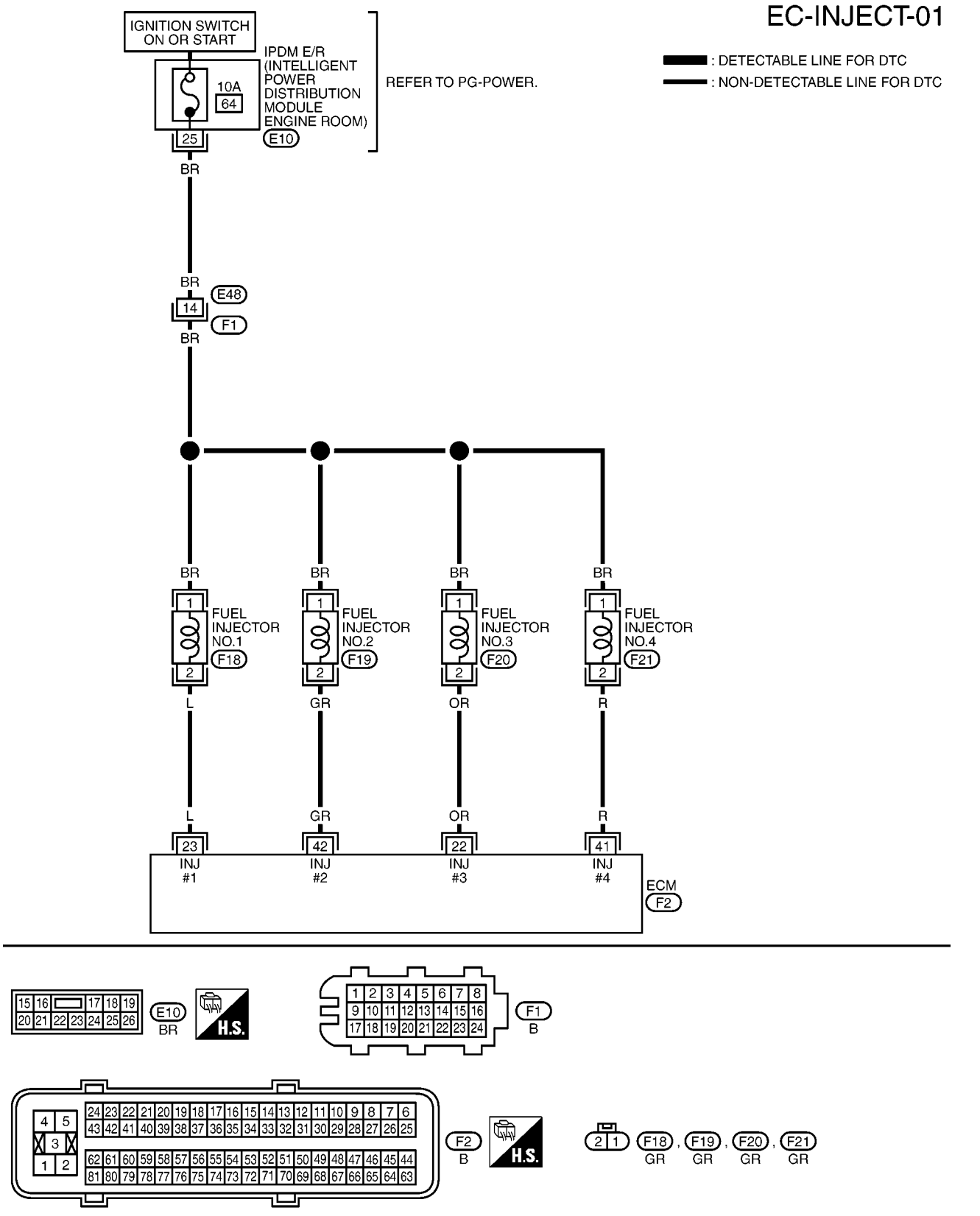

Specification data are reference values and are measured between each terminal and ground.
Pulse signal is measured by CONSULT-II.

CAUTION:
Do not use ECM ground terminals when measuring input/output voltage. Doing so may result in damage to the ECM's transistor. Use a ground other than ECM terminals, such as the ground.

TERMINAL NO.	WIRE COLOR	ITEM	CONDITION	DATA (DC Voltage)
22 23 41 42	O L R GR	Fuel injector No. 3 Fuel injector No. 1 Fuel injector No. 4 Fuel injector No. 2	**[Engine is running]** ● **Warm-up condition** ● Idle speed **NOTE:** The pulse cycle changes depending on rpm at idle.	BATTERY VOLTAGE (11 - 14V)★ 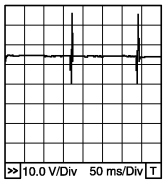 PBIB0529E
			[Engine is running] ● **Warm-up condition** ● Engine speed: 2,000 rpm	BATTERY VOLTAGE (11 - 14V)★ 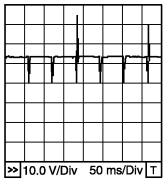 PBIB0530E

★: Average voltage for pulse signal (Actual pulse signal can be confirmed by oscilloscope.)

Diagnostic Procedure

BBS0033L

1. INSPECTION START

Turn ignition switch to START.
Is any cylinder ignited?

Yes or No

Yes >> GO TO 2.
No >> GO TO 3.

2. CHECK OVERALL FUNCTION

With CONSULT-II

1. Start engine.
2. Perform “POWER BALANCE” in “ACTIVE TEST” mode with CONSULT-II.
3. Make sure that each circuit produces a momentary engine speed drop.

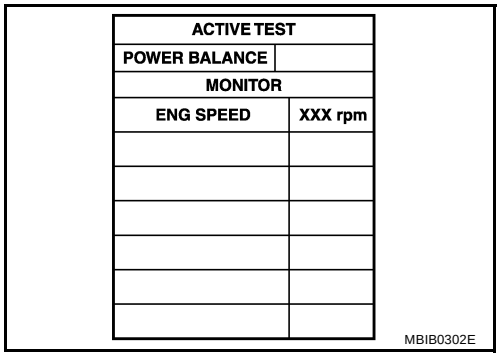

ACTIVE TEST	
POWER BALANCE	
MONITOR	
ENG SPEED	XXX rpm

MBIB0302E

Without CONSULT-II

1. Start engine.
2. Listen to each fuel injector operating sound.
   Clicking noise should be heard.

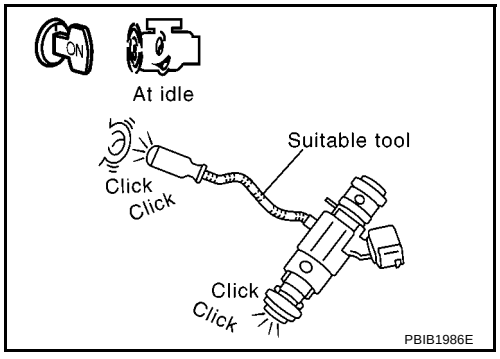

PBIB1986E

OK or NG

OK >> **INSPECTION END**
NG >> GO TO 3.

3. CHECK FUEL INJECTOR POWER SUPPLY CIRCUIT

1. Turn ignition switch OFF.
2. Disconnect fuel injector harness connector (1).
- ⇦: Vehicle front
3. Turn ignition switch ON.

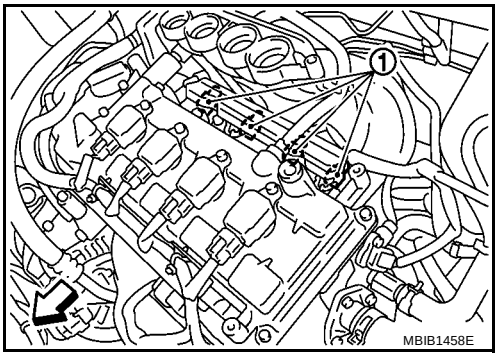

4. Check voltage between fuel injector terminal 1 and ground with CONSULT-II or tester.

Voltage: Battery voltage

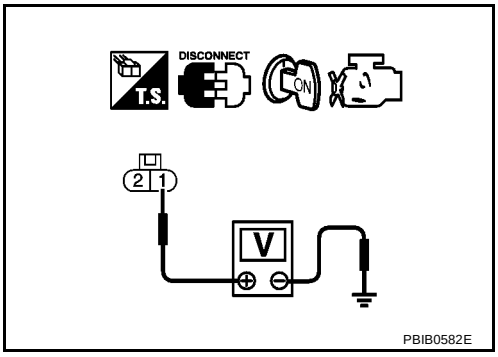

OK or NG

OK >> GO TO 5.
NG >> GO TO 4.

4. DETECT MALFUNCTIONING PART

Check the following.

- Harness connectors E48, F1
- 10A fuse
- Harness for open or short between fuel injector and fuse

>> Repair harness or connectors.

5. CHECK FUEL INJECTOR OUTPUT SIGNAL CIRCUIT FOR OPEN AND SHORT

1. Turn ignition switch OFF.
2. Disconnect ECM harness connector.
3. Check harness continuity between fuel injector terminal 2 and ECM terminals 22, 23, 41, 42. Refer to Wiring Diagram.

Continuity should exist.

4. Also check harness for short to ground and short to power.

OK or NG

OK >> GO TO 6.
NG >> Repair open circuit or short to ground or short to power in harness or connectors.

6. CHECK FUEL INJECTOR

Refer to EC-426, "Component Inspection" .

OK or NG

OK >> GO TO 7.
NG >> Replace fuel injector.

7. CHECK INTERMITTENT INCIDENT

Refer to EC-127, "TROUBLE DIAGNOSIS FOR INTERMITTENT INCIDENT" .

>> **INSPECTION END**

Component Inspection

BBS0033M

FUEL INJECTOR

1. Disconnect fuel injector harness connector.
2. Check resistance between terminals as shown in the figure.

Resistance: 10.4 - 15.3Ω [at 10 - 60°C (50 - 140°F)]

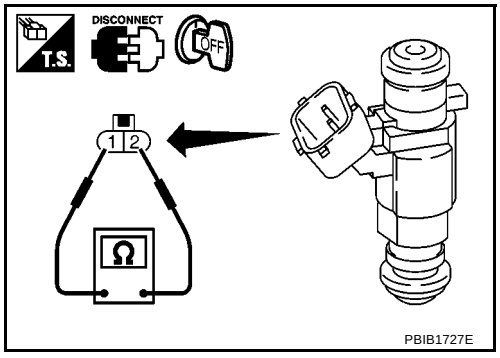

Removal and Installation

BBS0033N

FUEL INJECTOR

Refer to EM-32, "FUEL INJECTOR AND FUEL TUBE" .

FUEL PUMP

PFP:17042

Description

BBS0033O

SYSTEM DESCRIPTION

Sensor	Input Signal to ECM	ECM Function	Actuator
Crankshaft position sensor (POS) Camshaft position sensor (PHASE)	Engine speed*	Fuel pump control	Fuel pump relay
Battery	Battery voltage*		

*: ECM determines the start signal status by the signals of engine speed and battery voltage.

The ECM activates the fuel pump for several seconds after the ignition switch is turned ON to improve engine startability. If the ECM receives a engine speed signal from the crankshaft position sensor (POS) and camshaft position sensor (PHASE), it knows that the engine is rotating, and causes the pump to operate. If the engine speed signal is not received when the ignition switch is ON, the engine stalls. The ECM stops pump operation and prevents battery discharging, thereby improving safety. The ECM does not directly drive the fuel pump. It controls the ON/OFF fuel pump relay, which in turn controls the fuel pump.

Condition	Fuel pump operation
Ignition switch is turned to ON.	Operates for 1 second.
Engine running and cranking	Operates.
When engine is stopped	Stops in 1.5 seconds.
Except as shown above	Stops.

COMPONENT DESCRIPTION

A turbine type design fuel pump is used in the fuel tank.

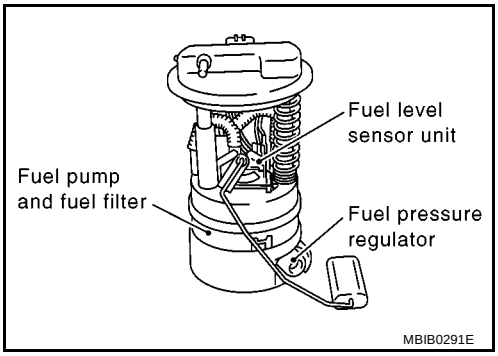

CONSULT-II Reference Value in Data Monitor Mode

BBS0033P

Specification data are reference values.

MONITOR ITEM	CONDITION	SPECIFICATION
FUEL PUMP RLY	● For 1 second after turning ignition switch ON ● Engine running or cranking	ON
	● Except above conditions	OFF

Wiring Diagram

BBS0033Q

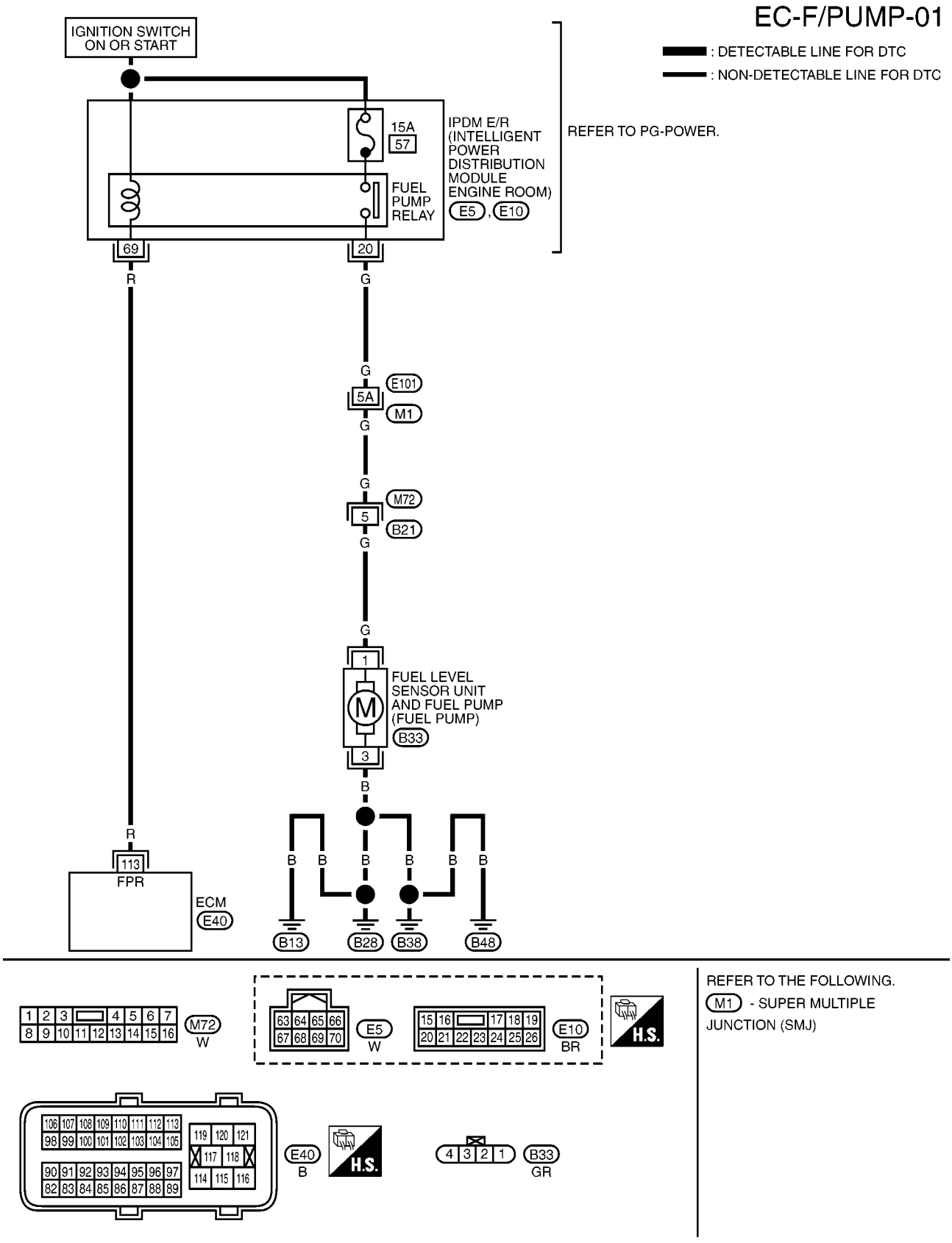

Specification data are reference values and are measured between each terminal and ground.

CAUTION:
Do not use ECM ground terminals when measuring input/output voltage. Doing so may result in damage to the ECM's transistor. Use a ground other than ECM terminals, such as the ground.

TERMINAL NO.	WIRE COLOR	ITEM	CONDITION	DATA (DC Voltage)
113	R	Fuel pump relay	**[Ignition switch: ON]** ● For 1 second after turning ignition switch ON **[Engine is running]**	0 - 1.0V
			[Ignition switch: ON] ● More than 1 second after turning ignition switch ON	BATTERY VOLTAGE (11 - 14V)

Diagnostic Procedure

BBS0033R

1. CHECK OVERALL FUNCTION

1. Turn ignition switch ON.
2. Pinch fuel feed hose (1) with two fingers.
   Fuel pressure pulsation should be felt on the fuel hose for 1 second after ignition switch is turned ON.

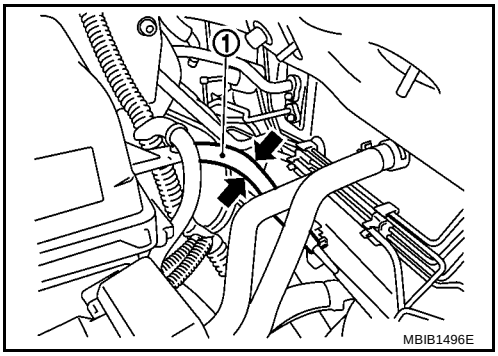

OK or NG

OK >> **INSPECTION END**
NG >> GO TO 2.

2. CHECK FUEL PUMP RELAY POWER SUPPLY CIRCUIT

1. Turn ignition switch OFF.
2. Disconnect ECM harness connector.
3. Turn ignition switch ON.
4. Check voltage between ECM terminals 113 and ground with CONSULT-II or tester.

   Voltage: Battery voltage

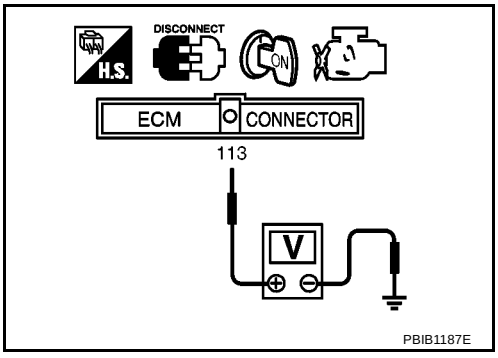

OK or NG

OK >> GO TO 5.
NG >> GO TO 3.

3. CHECK FUEL PUMP POWER SUPPLY CIRCUIT-I

Check voltage between IPDM E/R terminal 69 and ground with CONSULT-II or tester.

Voltage: Battery voltage

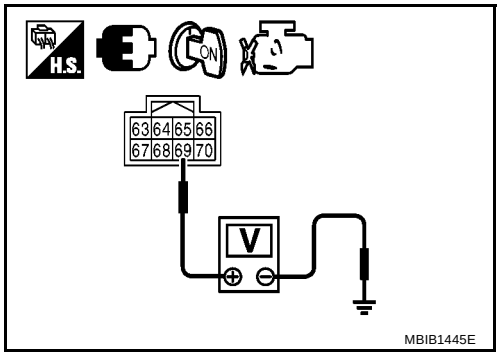

OK or NG

OK >> GO TO 4.
NG >> GO TO 11.

4. DETECT MALFUNCTIONING PART

Check harness for open or short between IPDM E/R and ECM

>> Repair harness or connectors.

5. CHECK FUEL PUMP POWER SUPPLY CIRCUIT-I

1. Turn ignition switch OFF.
2. Reconnect all harness connectors disconnected.
3. Disconnect “fuel level sensor unit and fuel pump” harness connector.
4. Turn ignition switch ON.

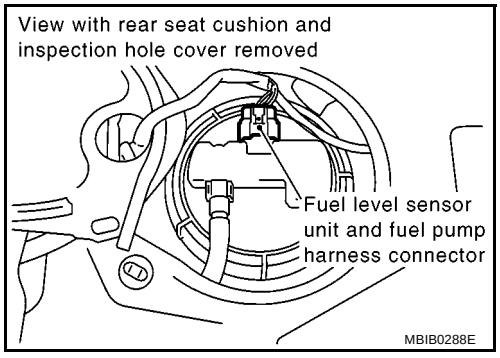

5. Check voltage between “Fuel level sensor unit and fuel pump” terminal 1 and ground with CONSULT-II or tester.

Voltage: Battery voltage should exist for 1 second after ignition switch is turned ON.

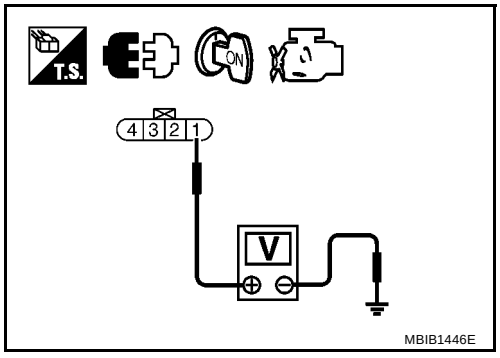

OK or NG

OK >> GO TO 9.
NG >> GO TO 6.

6. CHECK 15A FUSE

1. Turn ignition switch OFF.
2. Disconnect 15A fuse.
3. Check 15A fuse.

OK or NG

OK >> GO TO 7.
NG >> Replace fuse.

7. CHECK FUEL PUMP POWER SUPPLY CIRCUIT-II

1. Disconnect IPDM E/R harness connector E10.
2. Check harness continuity between IPDM E/R terminal 20 and “fuel level sensor unit and fuel pump” terminal 1. Refer to Wiring Diagram.

   Continuity should exist.

3. Also check harness for short to ground and short to power.

OK or NG

OK >> GO TO 11.
NG >> GO TO 8.

8. DETECT MALFUNCTIONING PART

Check the following.

- Harness connectors E101, M1
- Harness connectors M72, B21
- Harness for open or short between “fuel level sensor unit and fuel pump” and IPDM E/R

>> Repair open circuit or short to ground or short to power in harness or connectors.

9. CHECK FUEL PUMP GROUND CIRCUIT FOR OPEN AND SHORT

1. Turn ignition switch OFF.
2. Check harness continuity between “fuel level sensor unit and fuel pump” terminal 3 and ground. Refer to Wiring Diagram.

   Continuity should exist.

3. Also check harness for short to power.

OK or NG

OK >> GO TO 10.
NG >> Repair open circuit or short to power in harness or connectors.

10. CHECK FUEL PUMP

Refer to EC-431, "Component Inspection" .

OK or NG

OK >> GO TO 11.
NG >> Replace “fuel level sensor unit and fuel pump”.

11. CHECK INTERMITTENT INCIDENT

Refer to EC-127, "TROUBLE DIAGNOSIS FOR INTERMITTENT INCIDENT" .

OK or NG

OK >> Replace IPDM E/R. Refer to PG-18, "IPDM E/R (INTELLIGENT POWER DISTRIBUTION MODULE ENGINE ROOM)" .
NG >> Repair or replace harness or connector
>> **INSPECTION END**

Component Inspection

BBS0033S

FUEL PUMP

1. Disconnect “fuel level sensor unit and fuel pump” harness connector.

2. Check resistance between “fuel level sensor unit and fuel pump” terminals 1 and 3.

Resistance: Approximately 0.2 - 5.0Ω [at 25°C (77°F)]

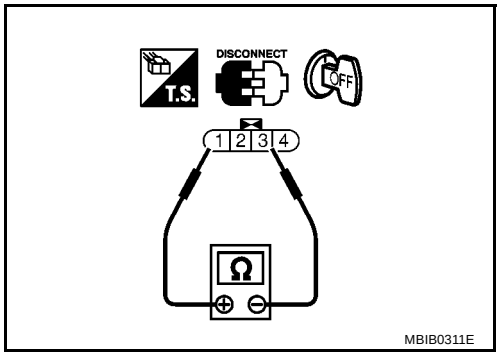

Removal and Installation

BBS0033T

FUEL PUMP

Refer to FL-4, "FUEL LEVEL SENSOR UNIT, FUEL FILTER AND FUEL PUMP ASSEMBLY" .

IGNITION SIGNAL

PFP:22448

Component Description

BBS0033D

IGNITION COIL & POWER TRANSISTOR

The ignition signal from the ECM is sent to and amplified by the power transistor. The power transistor turns ON and OFF the ignition coil primary circuit. This ON-OFF operation induces the proper high voltage in the coil secondary circuit.

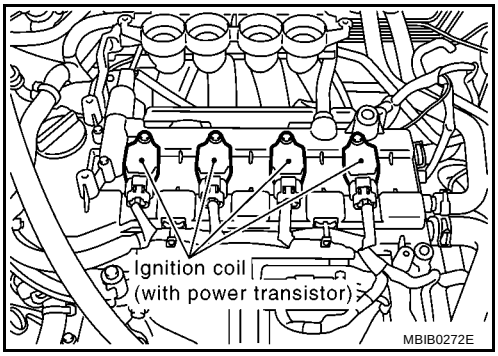

Wiring Diagram

BBS0033E

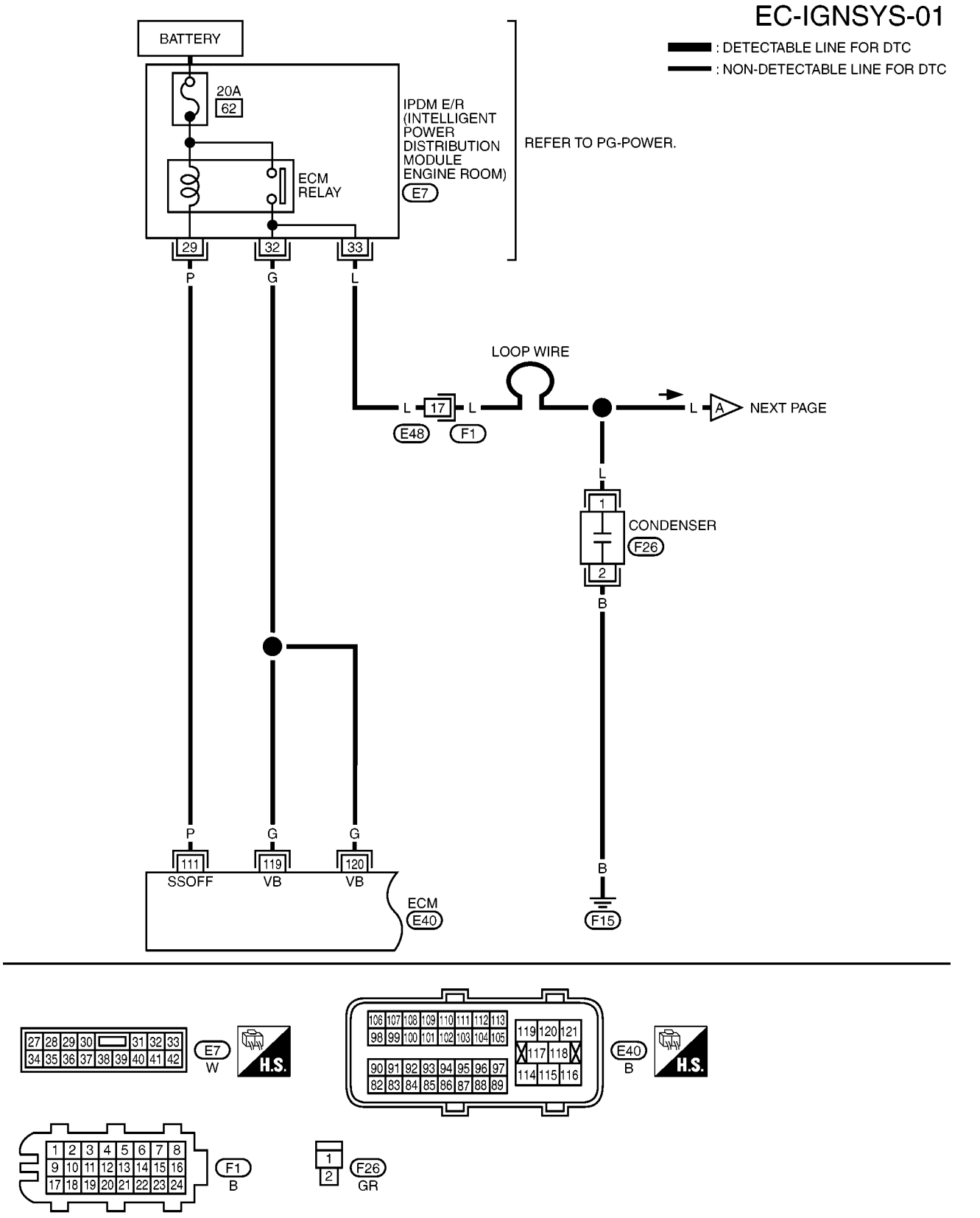

Specification data are reference values and are measured between each terminal and ground.

CAUTION:

Do not use ECM ground terminals when measuring input/output voltage. Doing so may result in damage to the ECM's transistor. Use a ground other than ECM terminals, such as the ground.

TERMINAL NO.	WIRE COLOR	ITEM	CONDITION	DATA (DC Voltage)
111	P	ECM relay (Self shut-off)	**[Engine is running]** **[Ignition switch: OFF]** ● For a few seconds after turning ignition switch OFF	0 - 1.0V
			[Ignition switch: OFF] ● More than a few seconds passed after turning ignition switch OFF	BATTERY VOLTAGE (11 - 14V)
119 120	G G	Power supply for ECM	**[Ignition switch: ON]**	BATTERY VOLTAGE (11 - 14V)

EC-IGNSYS-02

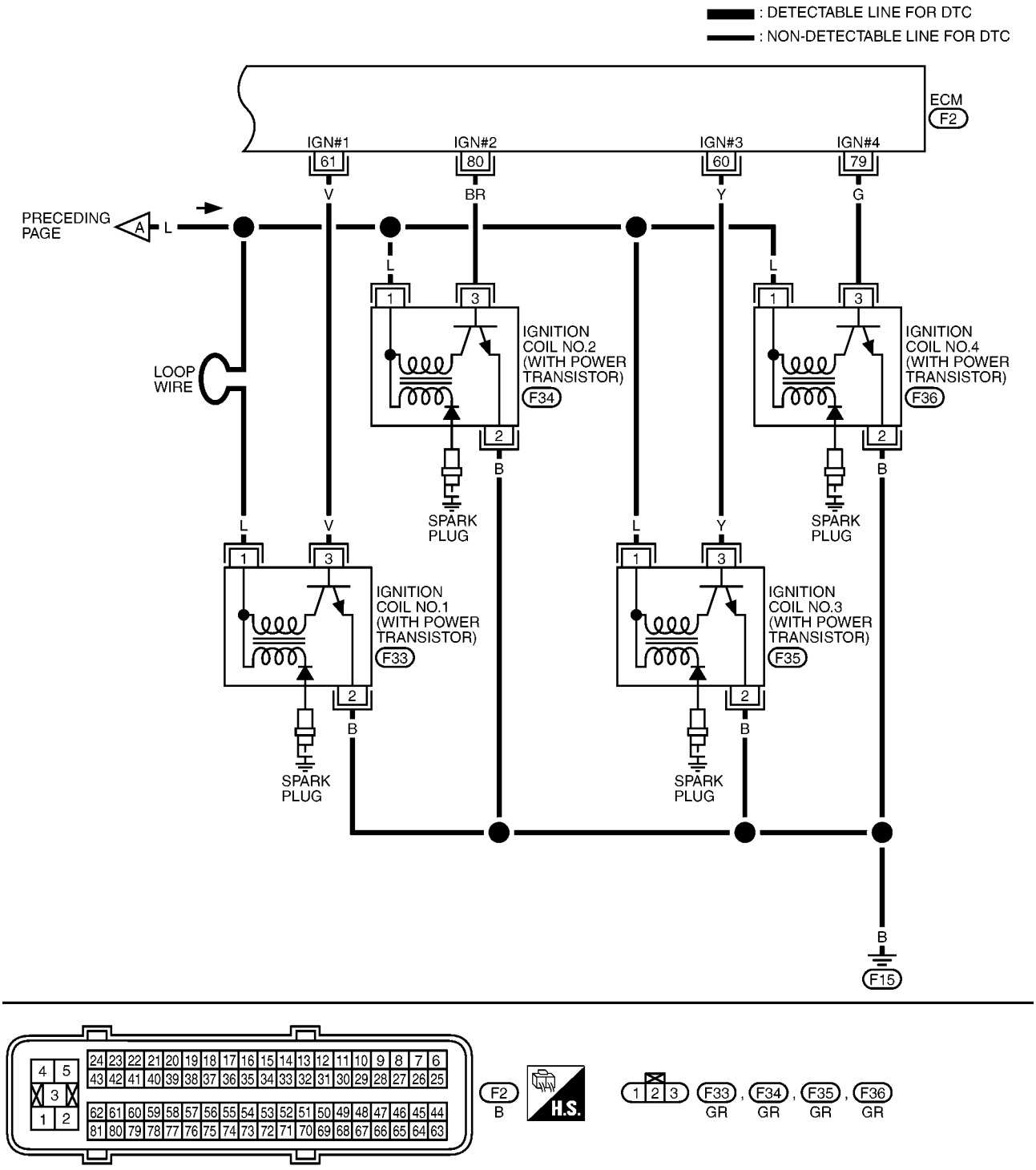
: DETECTABLE LINE FOR DTC
: NON-DETECTABLE LINE FOR DTC
ECM
F2
IGN#1
61
IGN#2
80
IGN#3
60
IGN#4
79
V
BR
Y
G
PRECEDING PAGE
A
L
LOOP WIRE
IGNITION COIL NO.2 (WITH POWER TRANSISTOR)
F34
IGNITION COIL NO.4 (WITH POWER TRANSISTOR)
F36
IGNITION COIL NO.1 (WITH POWER TRANSISTOR)
F33
IGNITION COIL NO.3 (WITH POWER TRANSISTOR)
F35
SPARK PLUG
B
F15
F2
B
H.S.
F33
GR
F34
GR
F35
GR
F36
GR
MBWA1537E

Specification data are reference values and are measured between each terminal and ground.
Pulse signal is measured by CONSULT-II.

CAUTION:
Do not use ECM ground terminals when measuring input/output voltage. Doing so may result in damage to the ECM's transistor. Use a ground other than ECM terminals, such as the ground.

TERMINAL NO.	WIRE COLOR	ITEM	CONDITION	DATA (DC Voltage)
60 61 79 80	Y V G BR	Ignition signal No. 3 Ignition signal No. 1 Ignition signal No. 4 Ignition signal No. 2	**[Engine is running]** ● **Warm-up condition** ● Idle speed **NOTE:** The pulse cycle changes depending on rpm at idle.	0 - 0.1V★ 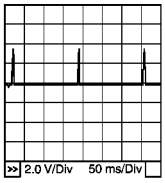 PBIB0521E
			[Engine is running] ● **Warm-up condition** ● Engine speed: 2,000 rpm	0 - 0.2V★ 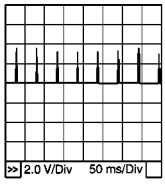 PBIB0522E

★: Average voltage for pulse signal (Actual pulse signal can be confirmed by oscilloscope.)

Diagnostic Procedure

BBS0033F

1. CHECK ENGINE START

Turn ignition switch OFF and restart engine.
Is engine running?

Yes or No

Yes (With CONSULT-II)>>GO TO 2.
Yes (Without CONSULT-II)>>GO TO 3.
No >> GO TO 4.

2. CHECK OVERALL FUNCTION

With CONSULT-II

1. Perform “POWER BALANCE” in “ACTIVE TEST” mode with CONSULT-II.
2. Make sure that each circuit produces a momentary engine speed drop.

OK or NG

OK >> **INSPECTION END**
NG >> GO TO 10.

ACTIVE TEST	
POWER BALANCE	
MONITOR	
ENG SPEED	XXX rpm

MBIB0302E

3. CHECK OVERALL FUNCTION

Without CONSULT-II

1. Let engine idle.
2. Read the voltage signal between ECM terminals 60, 61, 79, 80 and ground with an oscilloscope.
3. Verify that the oscilloscope screen shows the signal wave as shown in the figure.

   NOTE:
   The pulse cycle changes depending on rpm at idle.

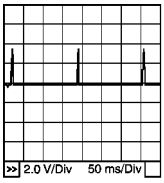

PBIB0521E

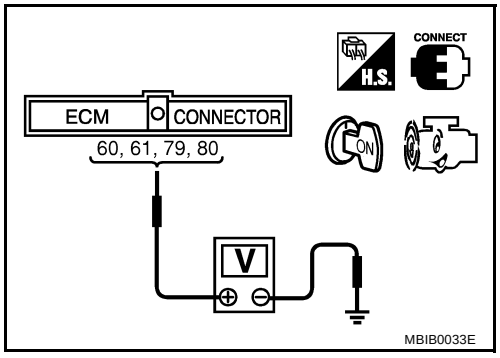

MBIB0033E

OK or NG

OK >> **INSPECTION END**
NG >> GO TO 10.

4. CHECK IGNITION COIL POWER SUPPLY CIRCUIT-I

1. Turn ignition switch OFF, wait at least 10 seconds and then turn ON.
2. Check voltage between ECM terminals 119, 120 and ground with CONSULT-II or tester.

   Voltage: Battery voltage

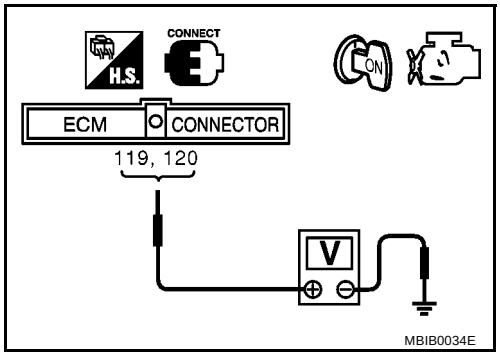

MBIB0034E

OK or NG

OK >> GO TO 5.
NG >> Go to EC-128, "POWER SUPPLY AND GROUND CIRCUIT" .

5. CHECK IGNITION COIL POWER SUPPLY CIRCUIT-II

1. Turn ignition switch OFF.
2. Disconnect condenser harness connector.
3. Turn ignition switch ON.
4. Check voltage between condenser terminal 1 and ground with CONSULT-II or tester.

   Voltage: Battery voltage

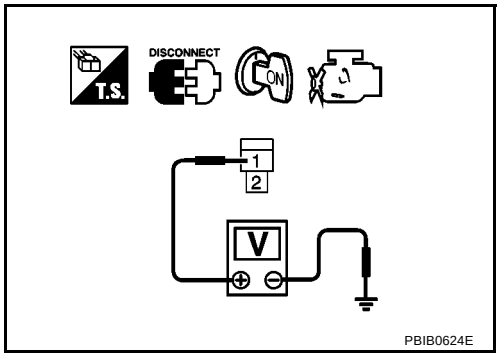

PBIB0624E

OK or NG

OK >> GO TO 8.
NG >> GO TO 6.

6. CHECK IGNITION COIL POWER SUPPLY CIRCUIT-III

1. Turn ignition switch OFF.
2. Disconnect IPDM E/R harness connector.
3. Check harness continuity between condenser terminal 1 and IPDM terminal 33.
   Refer to Wiring Diagram.

   Continuity should exist.

4. Also check harness for short to power and short to ground.

OK or NG

OK >> GO TO 15.
NG >> GO TO 7.

7. DETECT MALFUNCTION PART

Check the following.

- Harness connectors E48, F1
- Harness for open or short between IPDM E/R and condenser

>> Repair open circuit or short to ground or short to power in harness or connectors.

8. CHECK CONDENSER GROUND CIRCUIT FOR OPEN AND SHORT

1. Turn ignition switch OFF.
2. Check harness continuity between condenser terminal 2 and ground.
   Refer to Wiring Diagram.

   Continuity should exist.

3. Also check harness for short to power.

OK or NG

OK >> GO TO 9.
NG >> Repair open circuit or short to power in harness or connector.

9. CHECK CONDENSER

Refer to EC-441, "Component Inspection" .

OK or NG

OK >> GO TO 10.
NG >> Replace condenser.

10. CHECK IGNITION COIL POWER SUPPLY CIRCUIT-V

1. Turn ignition switch OFF.
2. Reconnect all harness connectors disconnected.
3. Disconnect ignition coil harness connector.
4. Turn ignition switch ON.

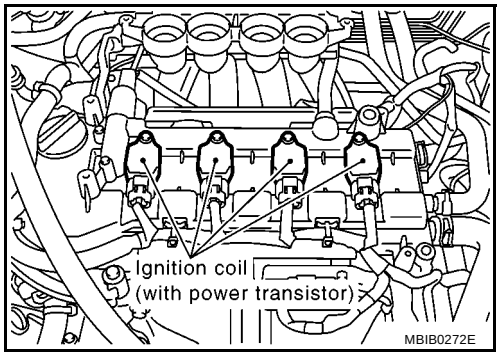

5. Check voltage between ignition coil terminal 1 and ground with CONSULT-II or tester.

Voltage: Battery voltage

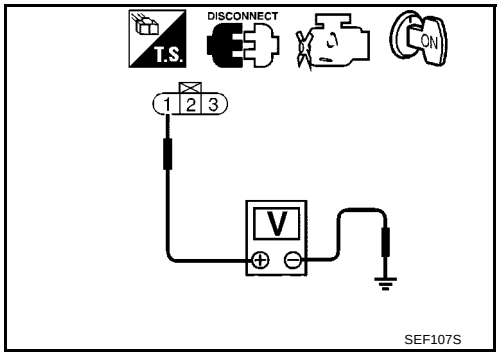

OK or NG

OK >> GO TO 12.
NG >> GO TO 11.

11. DETECT MALFUNCTIONING PART

Check harness for open or short between ignition coil and harness connector F1.

>> Repair open circuit or short to ground or short to power in harness or connectors.

12. CHECK IGNITION COIL GROUND CIRCUIT FOR OPEN AND SHORT

1. Turn ignition switch OFF.
2. Check harness continuity between ignition coil terminal 2 and ground.
   Refer to Wiring Diagram.

Continuity should exist.

3. Also check harness for short to power.

OK or NG

OK >> GO TO 13.
NG >> Repair open circuit or short to power in harness or connectors.

13. CHECK IGNITION COIL OUTPUT SIGNAL CIRCUIT FOR OPEN AND SHORT

1. Disconnect ECM harness connector.
2. Check harness continuity between ECM terminals 60, 61, 79, 80 and ignition coil terminal 3.
   Refer to Wiring Diagram.

Continuity should exist.

3. Also check harness for short to ground and short to power.

OK or NG

OK >> GO TO 14.
NG >> Repair open circuit or short to ground or short to power in harness or connectors.

14. CHECK IGNITION COIL WITH POWER TRANSISTOR

Refer to EC-441, "Component Inspection" .

OK or NG

OK >> GO TO 15.
NG >> Replace malfunctioning ignition coil with power transistor.

15. CHECK INTERMITTENT INCIDENT

Refer to EC-127, "TROUBLE DIAGNOSIS FOR INTERMITTENT INCIDENT" .

OK or NG

OK >> Replace IPDM E/R. Refer to PG-18, "IPDM E/R (INTELLIGENT POWER DISTRIBUTION MODULE ENGINE ROOM)" .
NG >> Repair or replace

Component Inspection

BBS0033G

IGNITION COIL WITH POWER TRANSISTOR

CAUTION:
Do the following procedure in the place where ventilation is good without the combustible.

1. Turn ignition switch OFF.
2. Disconnect ignition coil harness connector.
3. Check resistance between ignition coil terminals as follows.

Terminal No.	Resistance Ω [at 25°C (77°F)]
2 and 3	Except 0 or ∞
1 and 2	Except 0
1 and 3	

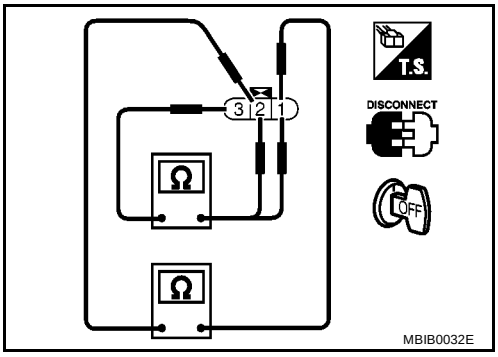

4. If NG, replace ignition coil with power transistor.
   If OK, go to next step.
5. Turn ignition switch OFF.
6. Reconnect all harness connectors disconnected.
7. Remove fuel pump fuse in IPDM E/R to release fuel pressure.
   NOTE:
   Do not use CONSULT-II to release fuel pressure, or fuel pressure applies again during the following procedure.
8. Start engine.
9. After engine stalls, crank it two or three times to release all fuel pressure.
10. Turn ignition switch OFF.
11. Remove ignition coil harness connectors to avoid the electrical discharge from the ignition coils.
12. Remove ignition coil and spark plug of the cylinder to be checked.
13. Crank engine for 5 seconds or more to remove combustion gas in the cylinder.
14. Connect spark plug and harness connector to ignition coil.

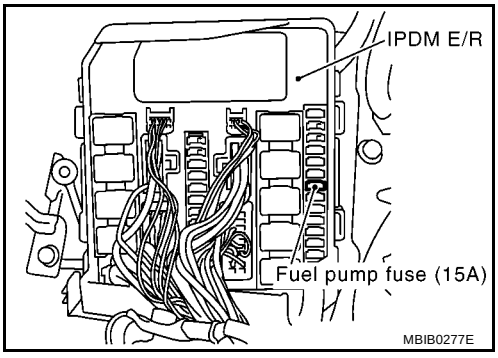

15. Fix ignition coil using a rope etc. with gap of 13 - 17 mm between the edge of the spark plug and grounded metal portion as shown in the figure.
16. Crank engine for about 3 seconds, and check whether spark is generated between the spark plug and the grounded part.

    Spark should be generated.

    CAUTION:
    - **Do not approach to the spark plug and the ignition coil within 50cm. Be careful not to get an electrical shock while checking, because the electrical discharge voltage becomes 20kV or more.**
    - **If might cause to damage the ignition coil if the gap of more than 17 mm is taken.**

    NOTE:
    When the gap is less than 13 mm, the spark might be generated even if the coil is malfunctioning.
17. If NG, replace ignition coil with power transistor.

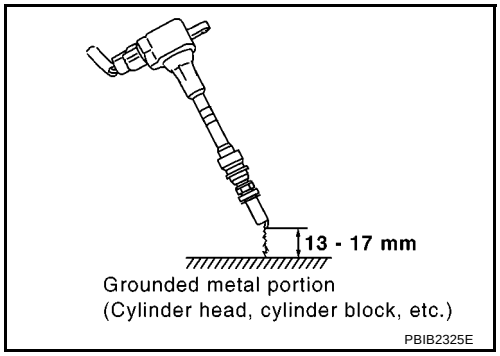

CONDENSER

1. Turn ignition switch OFF.
2. Disconnect condenser harness connector.
3. Check resistance between condenser terminals 1 and 2.

    Resistance: Above 1 MΩ at 25°C (77°F)

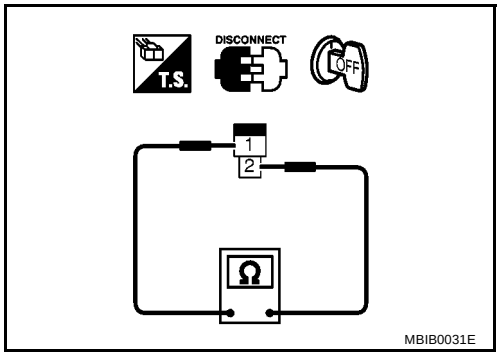

Removal and Installation

BBS0033H

IGNITION COIL WITH POWER TRANSISTOR

Refer to EM-29, "IGNITION COIL" .

REFRIGERANT PRESSURE SENSOR

PFP:92136

Component Description

BBS0033U

The refrigerant pressure sensor (1) is installed at the condenser of the air conditioner system. The sensor uses an electrostatic volume pressure transducer to convert refrigerant pressure to voltage. The voltage signal is sent to ECM, and ECM controls cooling fan system.

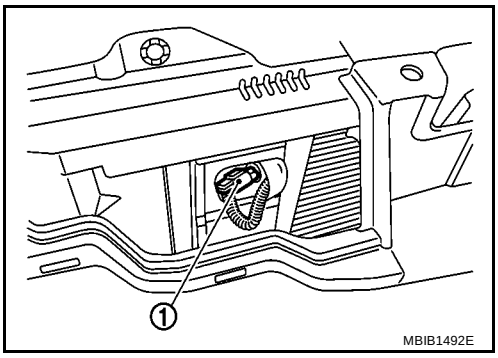

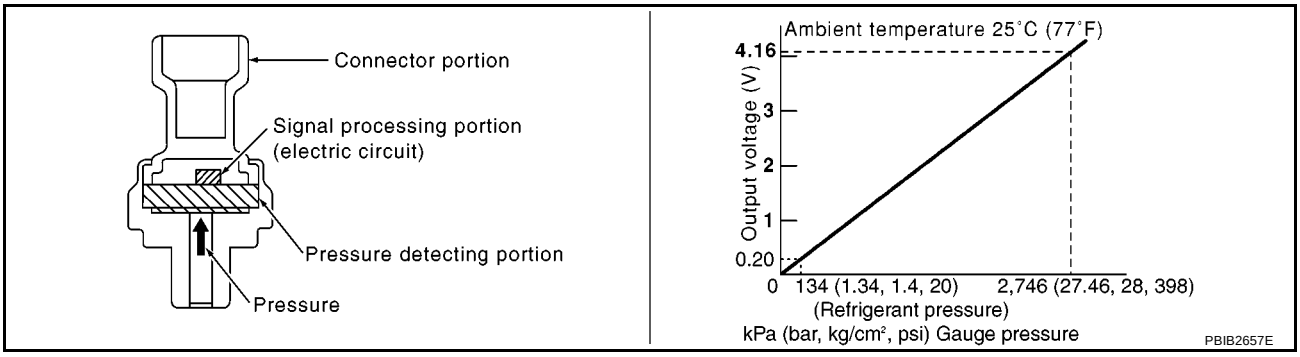

Wiring Diagram

BBS0033V

EC-RP/SEN-01

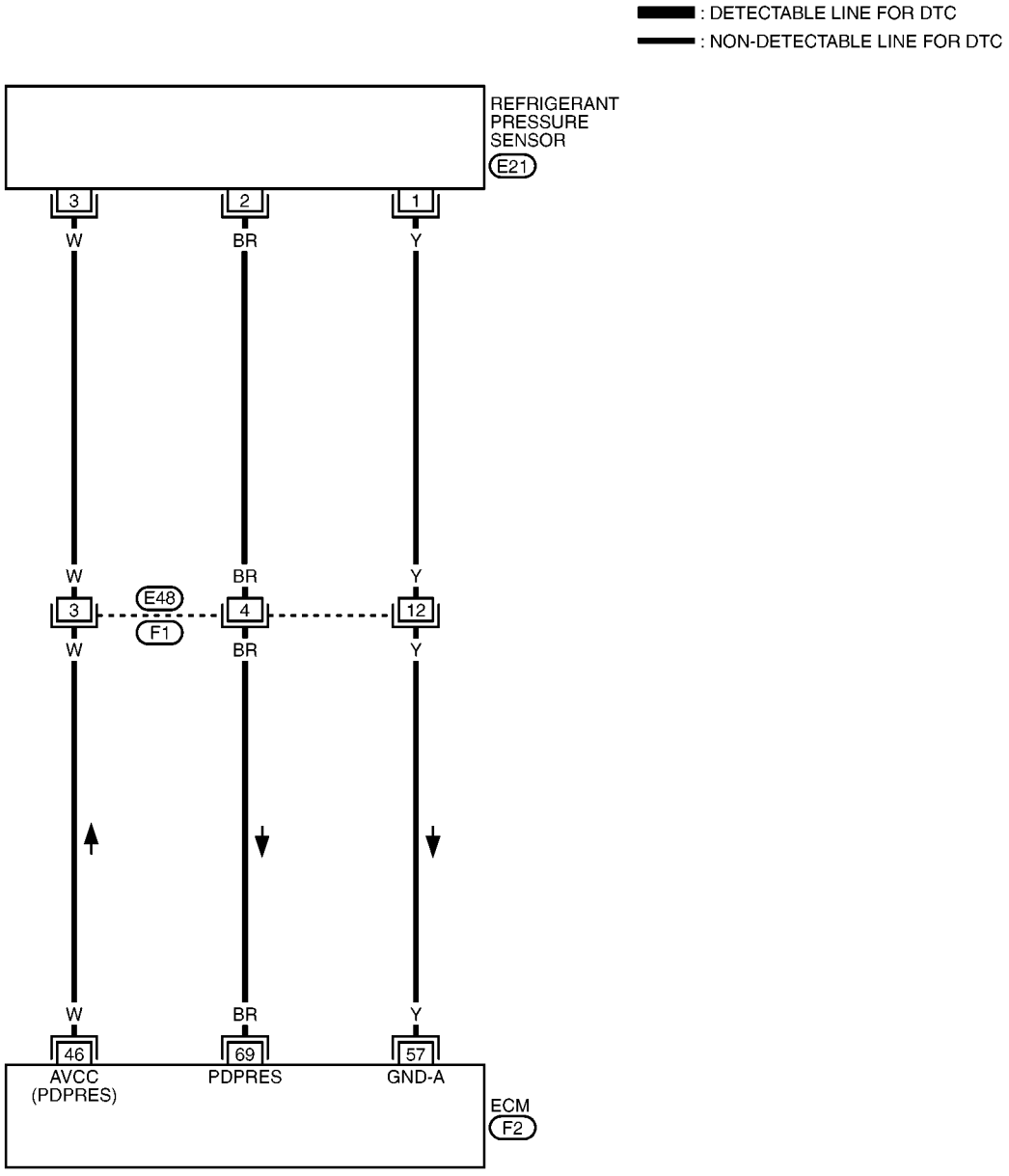

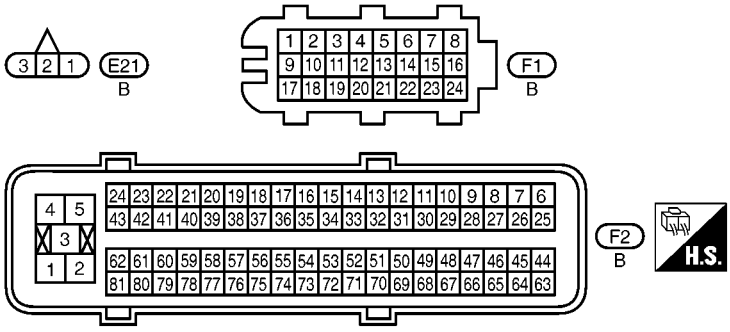

MBWA1540E

Specification data are reference values and are measured between each terminal and ground.

CAUTION:

Do not use ECM ground terminals when measuring input/output voltage. Doing so may result in damage to the ECM's transistor. Use a ground other than ECM terminals, such as the ground.

TERMINAL NO.	WIRE COLOR	ITEM	CONDITION	DATA (DC Voltage)
46	W	Sensor power supply (Refrigerant pressure sensor)	**[Ignition switch: ON]**	Approximately 5V
57	Y	Sensor ground (Refrigerant pressure sensor)	**[Engine is running]** ● **Warm-up condition** ● Idle speed	Approximately 0V
69	BR	Refrigerant pressure sensor	**[Engine is running]** ● **Warm-up condition** ● Both A/C switch and blower fan switch: ON. (Compressor operates.)	1.0 - 4.0V

Diagnostic Procedure

BBS0033W

1. CHECK REFRIGERANT PRESSURE SENSOR OVERALL FUNCTION

1. Start engine and warm it up to normal operating temperature.
2. Turn A/C switch and blower fan switch ON.
3. Check voltage between ECM terminal 69 and ground with CONSULT-II or tester.

Voltage: 1.0 - 4.0V

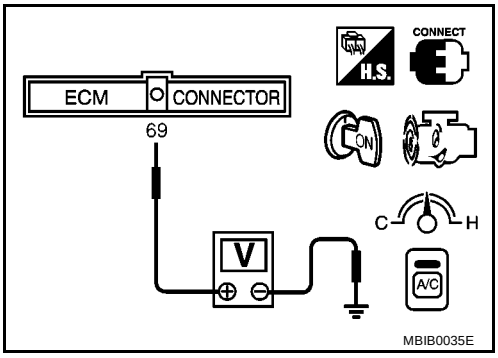

OK or NG

OK >> **INSPECTION END**
NG >> GO TO 2.

2. CHECK GROUND CONNECTIONS

1. Turn A/C switch and blower fan switch OFF.
2. Turn ignition switch OFF.
3. Loosen and retighten ground screws on the body.
   Refer to EC-133, "Ground Inspection" .

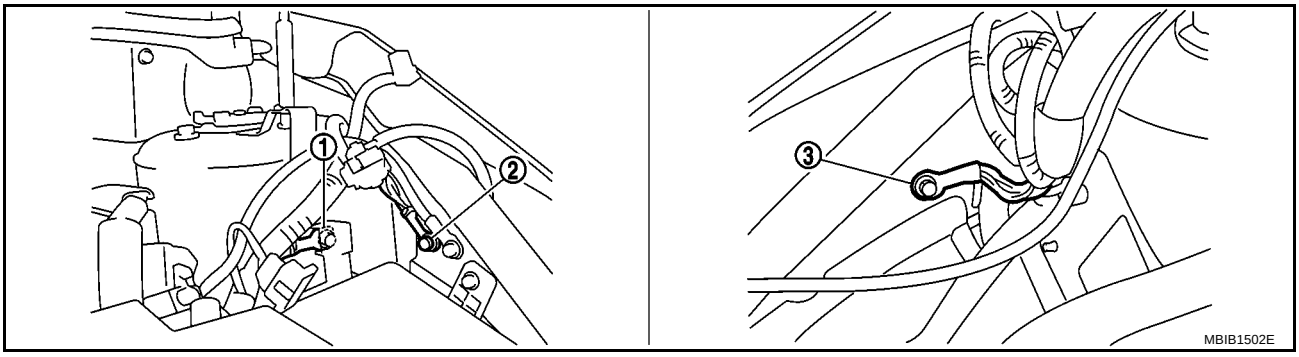

1. Body ground E44
2. Body ground E45
3. Body ground E28

OK or NG

OK >> GO TO 3.
NG >> Repair or replace ground connections.

3. CHECK REFRIGERANT PRESSURE SENSOR POWER SUPPLY CIRCUIT

1. Disconnect refrigerant pressure sensor (1) harness connector.
2. Turn ignition switch ON.

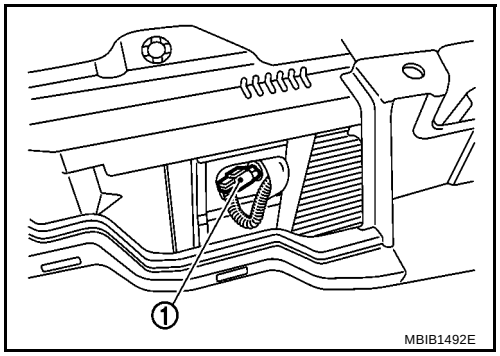

3. Check voltage between refrigerant pressure sensor terminal 3 and ground with CONSULT-II or tester.

Voltage: Approximately 5V

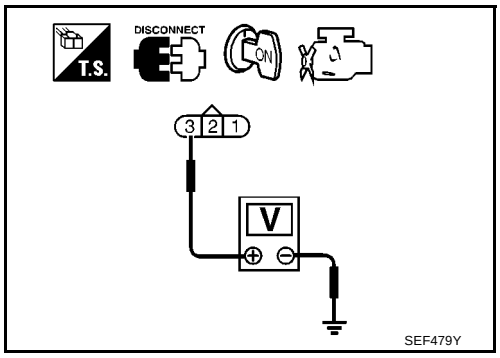

OK or NG

OK >> GO TO 5.
NG >> GO TO 4.

4. DETECT MALFUNCTIONING PART

Check the following.

- Harness connectors E48, F1
- Harness for open or short between ECM and refrigerant pressure sensor

>> Repair harness or connectors.

5. CHECK REFRIGERANT PRESSURE SENSOR GROUND CIRCUIT FOR OPEN AND SHORT

1. Turn ignition switch OFF.
2. Disconnect ECM harness connector.
3. Check harness continuity between ECM terminal 57 and refrigerant pressure sensor terminal 1. Refer to Wiring Diagram.

Continuity should exist.

4. Also check harness for short to ground and short to power.

OK or NG

OK >> GO TO 7.
NG >> GO TO 6.

6. DETECT MALFUNCTIONING PART

Check the following.

- Harness connectors E48, F1
- Harness for open or short between ECM and refrigerant pressure sensor

>> Repair open circuit or short to ground or short to power in harness or connectors.

7. CHECK REFRIGERANT PRESSURE SENSOR INPUT SIGNAL CIRCUIT FOR OPEN AND SHORT

1. Check harness continuity between ECM terminal 69 and refrigerant pressure sensor terminal 2. Refer to Wiring Diagram.

   Continuity should exist.

2. Also check harness for short to ground and short to power.

OK or NG

OK >> GO TO 9.
NG >> GO TO 8.

8. DETECT MALFUNCTIONING PART

Check the following.

- Harness connectors E48, F1
- Harness for open or short between ECM and refrigerant pressure sensor

>> Repair open circuit or short to ground or short to power in harness or connectors.

9. CHECK INTERMITTENT INCIDENT

Refer to EC-127, "TROUBLE DIAGNOSIS FOR INTERMITTENT INCIDENT" .

OK or NG

OK >> Replace refrigerant pressure sensor.
NG >> Repair or replace.

Removal and Installation

BBS0033X

REFRIGERANT PRESSURE SENSOR

Refer to ATC-142, "Removal and Installation for Refrigerant Pressure Sensor" (Models with A/C) or MTC-88, "Removal and Installation for Refrigerant Pressure Sensor" (Models without A/C).

MI & DATA LINK CONNECTORS

PFP:24814

Wiring Diagram

BBS00341

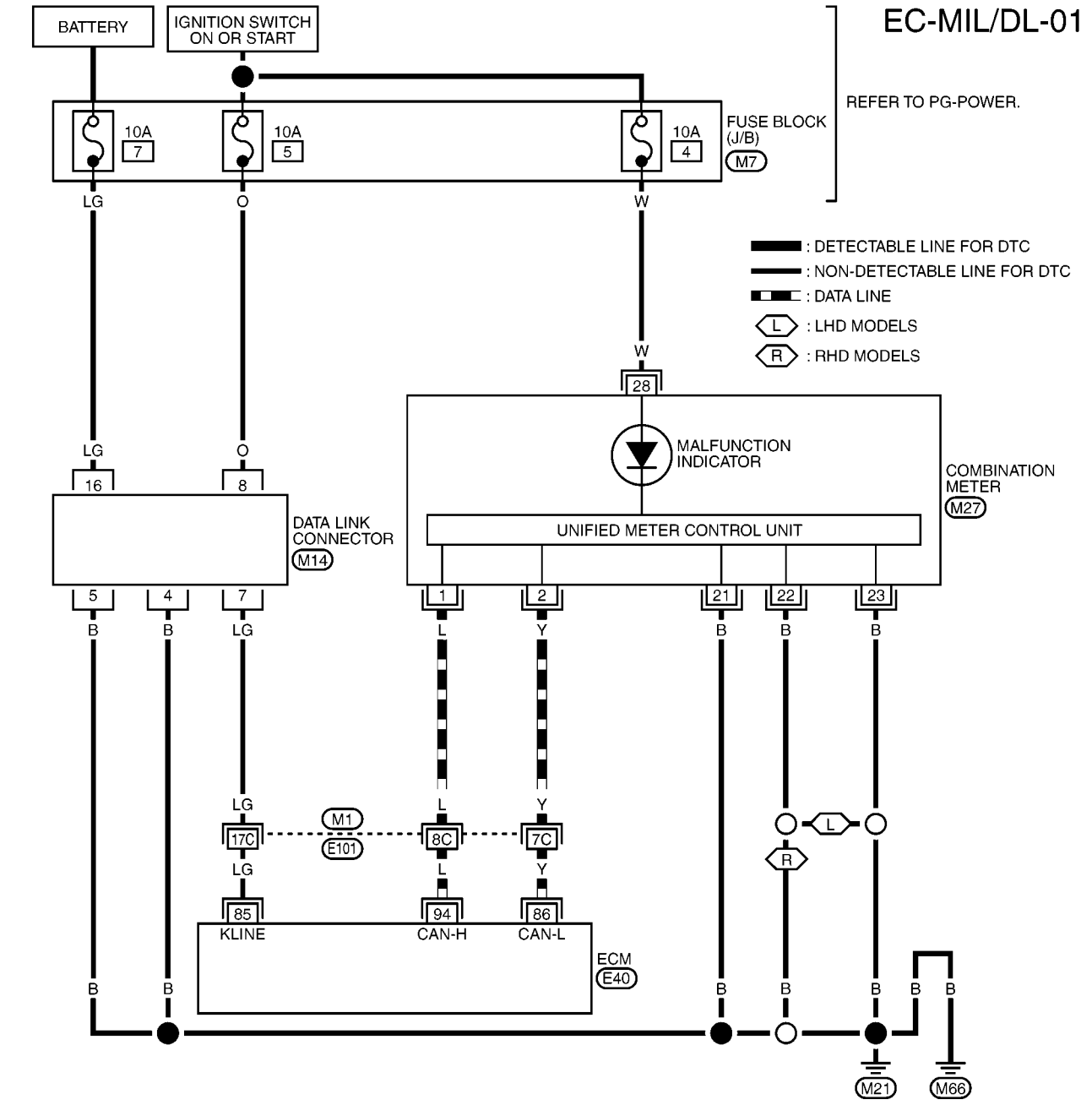

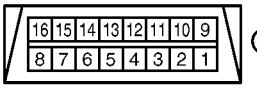

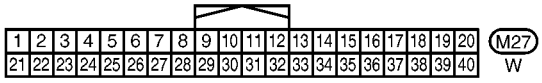

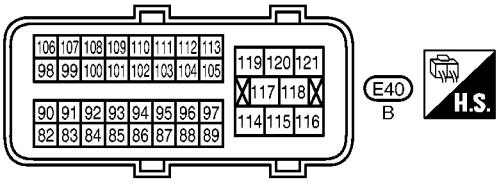

REFER TO THE FOLLOWING.
M1 - SUPER MULTIPLE JUNCTION (SMJ)
M7 - FUSE BLOCK - JUNCTION BOX (J/B)

MBWA1541E

SERVICE DATA AND SPECIFICATIONS (SDS)

PFP:00030

Fuel Pressure

BBS00347

Fuel pressure at idle	Approximately 350 kPa (3.5bar, 3.57kg/cm^2 , 51psi)

Idle Speed

BBS00348

Target idle speed	No load* (in Neutral position)	650 ± 50 rpm
Air conditioner: ON	In Neutral position	900 rpm or more

*: Under the following conditions:

- Air conditioner switch: OFF
- Electric load: OFF (Lights, heater fan & rear window defogger)
- Steering wheel: Kept in straight-ahead position

Calculated Load Value

BBS00349

Condition	Calculated load value% (Using CONSULT-II or GST)
At idle	10 – 35
At 2,500 rpm	10 – 35

Manifold Absolute Pressure Sensor

BBS0034A

Supply voltage	Approximately 5.0V
Output voltage at idle	1.4 – 1.5 V*

*: Engine is warmed up to normal operating temperature and running under no load.

Intake Air Temperature Sensor

BBS00487

Temperature °C (°F)	Resistance kΩ
25 (77)	1.9 – 2.1

Engine Coolant Temperature Sensor

BBS00488

Temperature °C (°F)	Resistance kΩ
20 (68)	2.1 – 2.9
50 (122)	0.68 – 1.00
90 (194)	0.236 – 0.260

Knock Sensor

BBS00489

Resistance [at 20°C (68°F)]	Approximately 530 – 590kΩ

Crankshaft Position Sensor (POS)

BBS0034F

Refer to EC-256, "Component Inspection" .

Camshaft Position Sensor (PHASE)

BBS0034G

Refer to EC-263, "Component Inspection" .

Heated Oxygen Sensor 1 Heater

BBS0034D

Resistance [at 25°C (77°F)]	3.4 – 4.4Ω

Heated Oxygen Sensor 2 Heater

BBS0034E

Resistance [at 25°C (77°F)]	8.0 – 10.0Ω

Intake Valve Timing Control Solenoid Valve

BBS0048A

Resistance [at 20°C (68°F)]	6.7 – 7.7Ω

Throttle Control Motor

BBS0034H

Resistance [at 25°C (77°F)]	Approximately 1 – 15Ω

Fuel Injector

BBS0034I

Resistance [at 10 - 60°C (50 - 140°F)]	10.4 – 15.3Ω

Fuel Pump

BBS0034J

Resistance [at 25°C (77°F)]	Approximately 0.2 – 5.0Ω

INDEX FOR DTC

PFP:00024

DTC No. Index

BBS0034L

NOTE:

- **If DTC U1001 is displayed with other DTC, first perform the trouble diagnosis for DTC U1001. Refer to EC-549, "DTC U1001 CAN COMMUNICATION LINE" .**
- **If DTC U1010 is displayed with other DTC, first perform the trouble diagnosis for DTC U1010. Refer to EC-552, "DTC U1010 CAN COMMUNICATION" .**

DTC*1		Items (CONSULT-II screen terms)	Reference page
CONSULT-II	ECM*2		
No DTC	Flashing*3	NO DTC IS DETECTED. FURTHER TESTING MAY BE REQUIRED.	EC-480
U1001	1001*4	CAN COMM CIRCUIT	EC-549
U1010	1010	CONTROL UNIT(CAN)	EC-552
P0000	**0000**	**NO DTC IS DETECTED. FURTHER TESTING MAY BE REQUIRED.**	**—**
P0011	0011	INT/V TIM CONT-B1	EC-554
P0107	0107	ABSL PRES SEN/CIRC	EC-559
P0108	0108	ABSL PRES SEN/CIRC	EC-559
P0117	0117	ECT SEN/CIRC	EC-565
P0118	0118	ECT SEN/CIRC	EC-565
P0122	0122	TP SEN 2/CIRC	EC-570
P0123	0123	TP SEN 2/CIRC	EC-570
P0132	0132	HO2S1 (B1)	EC-577
P0134	0134	HO2S1 (B1)	EC-584
P0138	0138	HO2S2 (B1)	EC-591
P0222	0222	TP SEN 1/CIRC	EC-598
P0223	0223	TP SEN 1/CIRC	EC-598
P0327	0327	KNOCK SEN/CIRC-B1	EC-605
P0328	0328	KNOCK SEN/CIRC-B1	EC-605
P0335	0335	CKP SEN/CIRCUIT	EC-609
P0340	0340	CMP SEN/CIRC-B1	EC-616
P0605	0605	ECM	EC-623
P1065	1065	ECM BACK UP/CIRCUIT	EC-626
P1111	1111	INT/V TIM V/CIR-B1	EC-630
P1121	1121	ETC ACTR	EC-635
P1122	1122	ETC FUNCTION/CIRC	EC-637
P1124	1124	ETC MOT PWR	EC-643
P1126	1126	ETC MOT PWR	EC-643
P1128	1128	ETC MOT	EC-649
P1171	1171	INTAKE ERROR	EC-654
P1211	1211	TCS C/U FUNTN	EC-660
P1212	1212	TCS/CIRC	EC-661
P1217	1217	ENG OVER TEMP	EC-662
P1225	1225	CTP LEARNING	EC-676

DTC*1		Items (CONSULT-II screen terms)	Reference page
CONSULT-II	ECM*2		
P1226	1226	CTP LEARNING	EC-678
P1229	1229	SENSOR POWER/CIRC	EC-680
P1610 - P1615	1610 - 1615	NATS MALFUNCTION	EC-473
P1706	1706	P-N POS SW/CIRCUIT	EC-688
P1805	1805	BRAKE SW/CIRCUIT	EC-693
P2122	2122	APP SEN 1/CIRC	EC-699
P2123	2123	APP SEN 1/CIRC	EC-699
P2127	2127	APP SEN 2/CIRC	EC-708
P2128	2128	APP SEN 2/CIRC	EC-708
P2135	2135	TP SENSOR	EC-718
P2138	2138	APP SENSOR	EC-725

*1: 1st trip DTC No. is the same as DTC No.
*2: In Diagnostic Test Mode II (Self-diagnostic results), this number is controlled by NISSAN.
*3: When engine is running.
*4: The troubleshooting for this DTC needs CONSULT-II.

Alphabetical Index

BBS0034K

NOTE:

- **If DTC U1001 is displayed with other DTC, first perform the trouble diagnosis for DTC U1001. Refer to EC-549, "DTC U1001 CAN COMMUNICATION LINE" .**
- **If DTC U1010 is displayed with other DTC, first perform the trouble diagnosis for DTC U1010. Refer to EC-552, "DTC U1010 CAN COMMUNICATION" .**

Items (CONSULT-II screen terms)	DTC*1		Reference page
	CONSULT-II	ECM*2	
ABSL PRES SEN/CIRC	P0107	0107	EC-559
ABSL PRES SEN/CIRC	P0108	0108	EC-559
APP SEN 1/CIRC	P2122	2122	EC-699
APP SEN 1/CIRC	P2123	2123	EC-699
APP SEN 2/CIRC	P2127	2127	EC-708
APP SEN 2/CIRC	P2128	2128	EC-708
APP SENSOR	P2138	2138	EC-725
BRAKE SW/CIRCUIT	P1805	1805	EC-693
CAN COMM CIRCUIT	U1001	1001*4	EC-549
CKP SEN/CIRCUIT	P0335	0335	EC-609
CMP SEN/CIRC-B1	P0340	0340	EC-616
CONTROL UNIT(CAN)	U1010	1010	EC-552
CTP LEARNING	P1225	1225	EC-676
CTP LEARNING	P1226	1226	EC-678
ECM	P0605	0605	EC-623
ECM BACK UP/CIRCUIT	P1065	1065	EC-626
ECT SEN/CIRC	P0117	0117	EC-565
ECT SEN/CIRC	P0118	0118	EC-565
ENG OVER TEMP	P1217	1217	EC-662
ETC ACTR	P1121	1121	EC-635
ETC FUNCTION/CIRC	P1122	1122	EC-637
ETC MOT	P1128	1128	EC-649
ETC MOT PWR	P1124	1124	EC-643
ETC MOT PWR	P1126	1126	EC-643
HO2S1 (B1)	P0132	0132	EC-577
HO2S1 (B1)	P0134	0134	EC-584
HO2S2 (B1)	P0138	0138	EC-591
INT/V TIM CONT-B1	P0011	0011	EC-554
INT/V TIM V/CIR-B1	P1111	1111	EC-630
INTAKE ERROR	P1171	1171	EC-654
KNOCK SEN/CIRC-B1	P0327	0327	EC-605
KNOCK SEN/CIRC-B1	P0328	0328	EC-605
NATS MALFUNCTION	P1610 - P1615	1610 - 1615	EC-473
NO DTC IS DETECTED. FURTHER TESTING MAY BE REQUIRED.	No DTC	Flashing*3	EC-480
NO DTC IS DETECTED. FURTHER TESTING MAY BE REQUIRED.	**P0000**	**0000**	**—**

Items (CONSULT-II screen terms)	DTC*1		Reference page
	CONSULT-II	ECM*2	
P-N POS SW/CIRCUIT	P1706	1706	EC-688
SENSOR POWER/CIRC	P1229	1229	EC-680
TCS C/U FUNCTN	P1211	1211	EC-660
TCS/CIRC	P1212	1212	EC-661
TP SEN 1/CIRC	P0222	0222	EC-598
TP SEN 1/CIRC	P0223	0223	EC-598
TP SEN 2/CIRC	P0122	0122	EC-570
TP SEN 2/CIRC	P0123	0123	EC-570
TP SENSOR	P2135	2135	EC-718

*1: 1st trip DTC No. is the same as DTC No.
*2: In Diagnostic Test Mode II (Self-diagnostic results), this number is controlled by NISSAN.
*3: When engine is running.
*4: The troubleshooting for this DTC needs CONSULT-II.

PRECAUTIONS

PFP:00001

Precautions for Supplemental Restraint System (SRS) “AIR BAG” and “SEAT BELT PRE-TENSIONER”

BBS0047X

The Supplemental Restraint System such as “AIR BAG” and “SEAT BELT PRE-TENSIONER”, used along with a front seat belt, helps to reduce the risk or severity of injury to the driver and front passenger for certain types of collision. Information necessary to service the system safely is included in the SRS and SB section of this Service Manual.

WARNING:

- **To avoid rendering the SRS inoperative, which could increase the risk of personal injury or death in the event of a collision which would result in air bag inflation, all maintenance must be performed by an authorized NISSAN/INFINITI dealer.**
- **Improper maintenance, including incorrect removal and installation of the SRS, can lead to personal injury caused by unintentional activation of the system. For removal of Spiral Cable and Air Bag Module, see the SRS section.**
- **Do not use electrical test equipment on any circuit related to the SRS unless instructed to in this Service Manual. SRS wiring harnesses can be identified by yellow and/or orange harnesses or harness connectors.**

Maintenance Information

BBS005AR

If any of following part is replaced, always replace with new* one.
If it's not (or fail to do so), the electrical system may not be operated properly.
*: New one means a virgin control unit that has never been energized on-board.

RHD MODELS

- BCM (Models without Intelligent Key system)
- Intelligent Key unit (Models with Intelligent Key system)
- ECM
- IPDM E/R
- Combination meter
- EPS control unit

LHD MODELS

- BCM (Models without Intelligent Key system)
- Intelligent Key unit (Models with Intelligent Key system)
- ECM

Precautions for Procedures without Cowl Top Cover

BBS0047Y

When performing the procedure after removing cowl top cover, cover the lower end of windshield with urethane, etc.

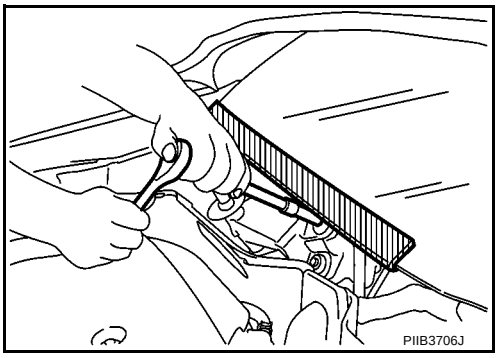

On Board Diagnostic (OBD) System of Engine

BBS0034O

The ECM has an on board diagnostic system. It will light up the malfunction indicator (MI) to warn the driver of a malfunction causing emission deterioration.

CAUTION:

- **Be sure to turn the ignition switch OFF and disconnect the battery ground cable before any repair or inspection work. The open/short circuit of related switches, sensors, solenoid valves, etc. will cause the MI to light up.**

- Be sure to connect and lock the connectors securely after work. A loose (unlocked) connector will cause the MI to light up due to the open circuit. (Be sure the connector is free from water, grease, dirt, bent terminals, etc.)
- Certain systems and components, especially those related to OBD, may use a new style slide-locking type harness connector. For description and how to disconnect, refer to PG-88, "HARNESS CONNECTOR" .
- Be sure to route and secure the harnesses properly after work. The interference of the harness with a bracket, etc. may cause the MI to light up due to the short circuit.
- Be sure to erase the unnecessary malfunction information (repairs completed) from the ECM.

Precaution

BBS0034P

- Always use a 12 volt battery as power source.
- Do not attempt to disconnect battery cables while engine is running.
- Before connecting or disconnecting the ECM harness connector, turn ignition switch OFF and disconnect negative battery cable. Failure to do so may damage the ECM because battery voltage is applied to ECM even if ignition switch is turned off.
- Before removing parts, turn ignition switch OFF and then disconnect negative battery cable.

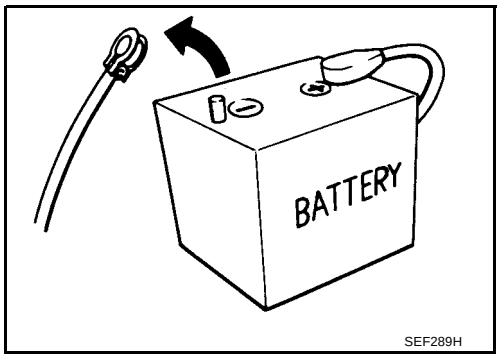

- Do not disassemble ECM.
- If battery cable is disconnected, the memory will return to the initial ECM values.
  The ECM will now start to self-control at its initial values. Engine operation can vary slightly when the cable is disconnected. However, this is not an indication of a malfunction. Do not replace parts because of a slight variation.
- If the battery is disconnected, the following emission related diagnostic information will be lost within 24 hours.
  - Diagnostic trouble codes
  - 1st trip diagnostic trouble codes
  - Freeze frame data
  - 1st freeze frame data

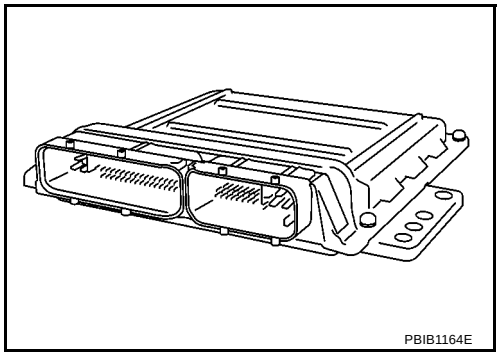

- When connecting ECM harness connector, fasten it securely with levers as far as they will go as shown in the figure.

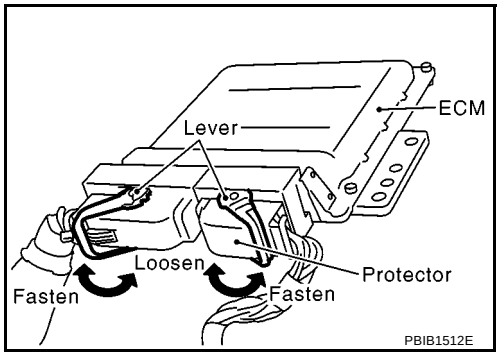

- When connecting or disconnecting pin connectors into or from ECM, take care not to damage pin terminals (bend or break).
  Make sure that there are not any bends or breaks on ECM pin terminal, when connecting pin connectors.

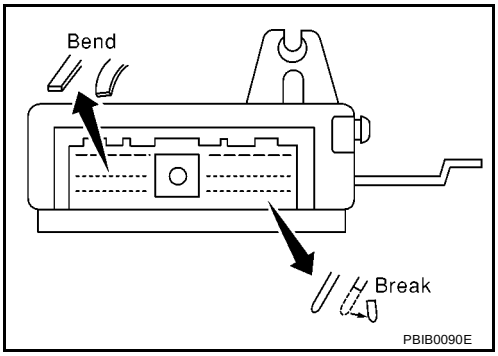

- Securely connect ECM harness connectors.
  A poor connection can cause an extremely high (surge) voltage to develop in coil and condenser, thus resulting in damage to ICs.
- Keep engine control system harness at least 10 cm (4 in) away from adjacent harness, to prevent engine control system malfunctions due to receiving external noise, degraded operation of ICs, etc.
- Keep engine control system parts and harness dry.
- Before replacing ECM, perform ECM Terminals and Reference Value inspection and make sure ECM functions properly. Refer to EC-512, "ECM Terminals and Reference Value".

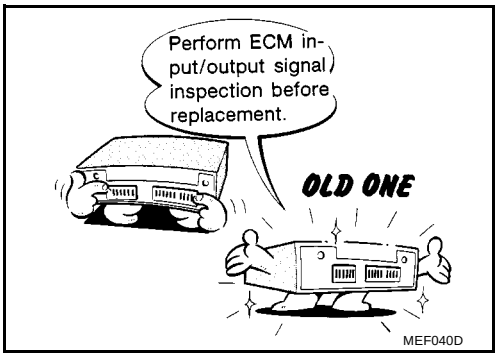

- Handle manifold absolute pressure sensor carefully to avoid damage.
- Do not clean air clear element with any type of detergent.
- Do not disassemble electric throttle control actuator.
- Even a slight leak in the air intake system can cause serious incidents.
- Do not shock or jar the camshaft position sensor (PHASE), crankshaft position sensor (POS).
- After performing each TROUBLE DIAGNOSIS, perform DTC Confirmation Procedure or Overall Function Check.
  The DTC should not be displayed in the DTC Confirmation Procedure if the repair is completed. The Overall Function Check should be a good result if the repair is completed.

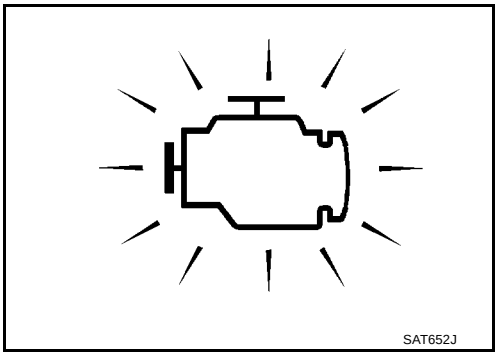

- **When measuring ECM signals with a circuit tester, connect a break-out box (SST) and Y-cable adapter (SST) between the ECM and ECM harness connector.**
- **When measuring ECM signals with a circuit tester, never allow the two tester probes to contact.**
  Accidental contact of probes will cause a short circuit and damage the ECM power transistor.
- **Do not use ECM ground terminals when measuring input/output voltage. Doing so may result in damage to the ECM's transistor. Use a ground other than ECM terminals, such as the ground.**

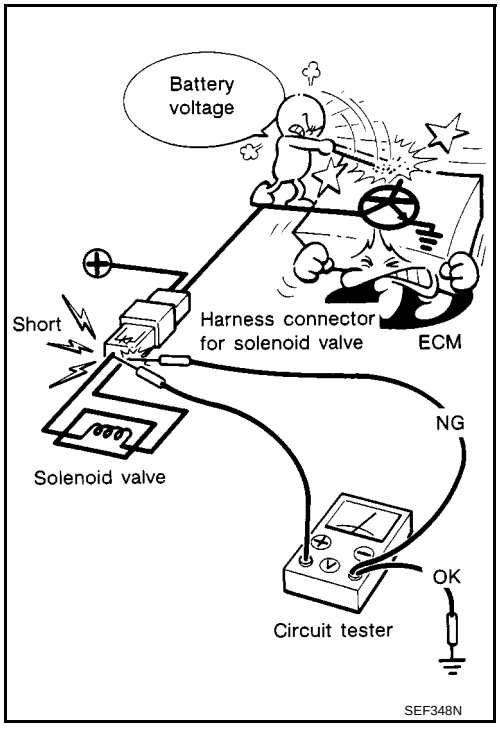

- **Do not operate fuel pump when there is no fuel in lines.**
- **Tighten fuel hose clamps to the specified torque.**

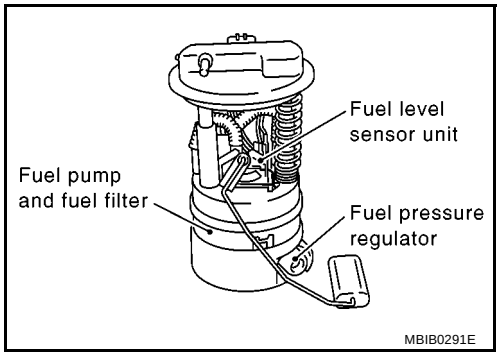

- **Do not depress accelerator pedal when starting.**
- **Immediately after starting, do not rev up engine unnecessarily.**
- **Do not rev up engine just prior to shutdown.**

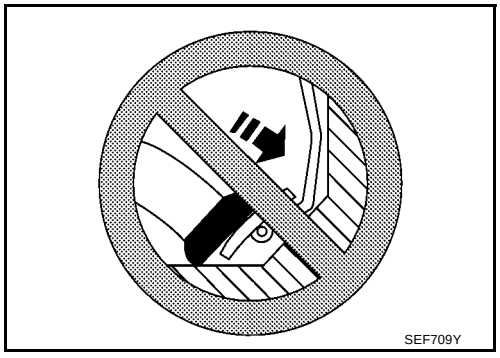

- **When installing C.B. ham radio or a mobile phone, be sure to observe the following as it may adversely affect electronic control systems depending on installation location.**
  - **Keep the antenna as far as possible from the electronic control units.**
  - **Keep the antenna feeder line more than 20 cm (8 in) away from the harness of electronic controls.**
    Do not let them run parallel for a long distance.
  - **Adjust the antenna and feeder line so that the standing-wave radio can be kept smaller.**
  - **Be sure to ground the radio to vehicle body.**

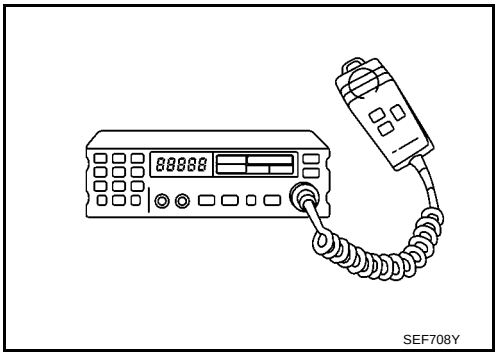

PREPARATION

PFP:00002

Special Service Tools

BBS0034R

Tool number Tool name		Description
EG17650301 Radiator cap tester adapter	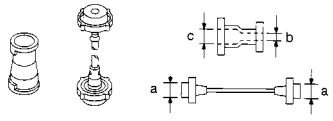 S-NT564	Adapting radiator cap tester to radiator cap and radiator filler neck **a: 28 (1.10) dia.** **b: 31.4 (1.236) dia.** **c: 41.3 (1.626) dia.** Unit: mm (in)
KV10117100 Heated oxygen sensor wrench	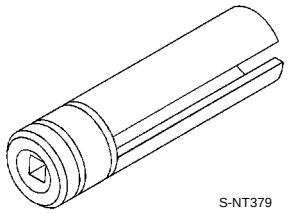 S-NT379	Loosening or tightening heated oxygen sensors with 22 mm (0.87 in) hexagon nut
KV10114400 Heated oxygen sensor wrench	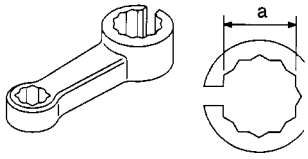 S-NT636	Loosening or tightening heated oxygen sensors **a: 22 mm (0.87 in)**
KV109E0010 Break-out box	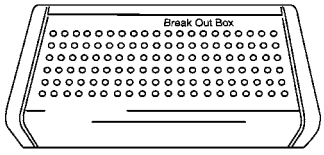 NT825	Measuring ECM signals with a circuit tester
KV109E0080 Y-cable adapter	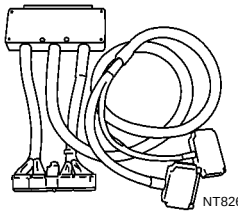 NT826	Measuring ECM signals with a circuit tester

Commercial Service Tools

BBS0034S

Tool name		Description
Quick connector release	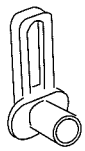 PBIC0198E	Removing fuel tube quick connectors in engine room (Available in SEC. 164 of PARTS CATALOG: Part No. 16441 6N210)
Fuel filler cap adapter	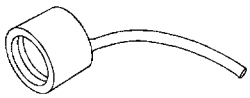 S-NT653	Checking fuel tank vacuum relief valve opening pressure
Socket wrench	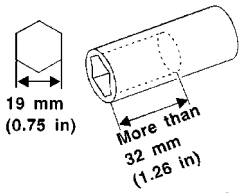 S-NT705	Removing and installing engine coolant temperature sensor
Oxygen sensor thread cleaner	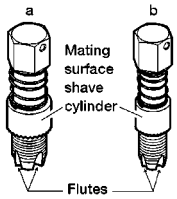 AEM488	Reconditioning the exhaust system threads before installing a new oxygen sensor. Use with anti-seize lubricant shown below. **a: 18 mm diameter with pitch 1.5 mm for Zirconia Oxygen Sensor** **b: 12 mm diameter with pitch 1.25 mm for Titania Oxygen Sensor**
Anti-seize lubricant i.e.: (Permatex™ 133AR or equivalent meeting MIL specification MIL-A-907)	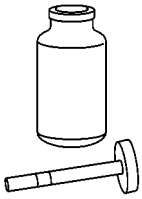 S-NT779	Lubricating oxygen sensor thread cleaning tool when reconditioning exhaust system threads.

ENGINE CONTROL SYSTEM

PFP:23710

System Diagram

BBS0034T

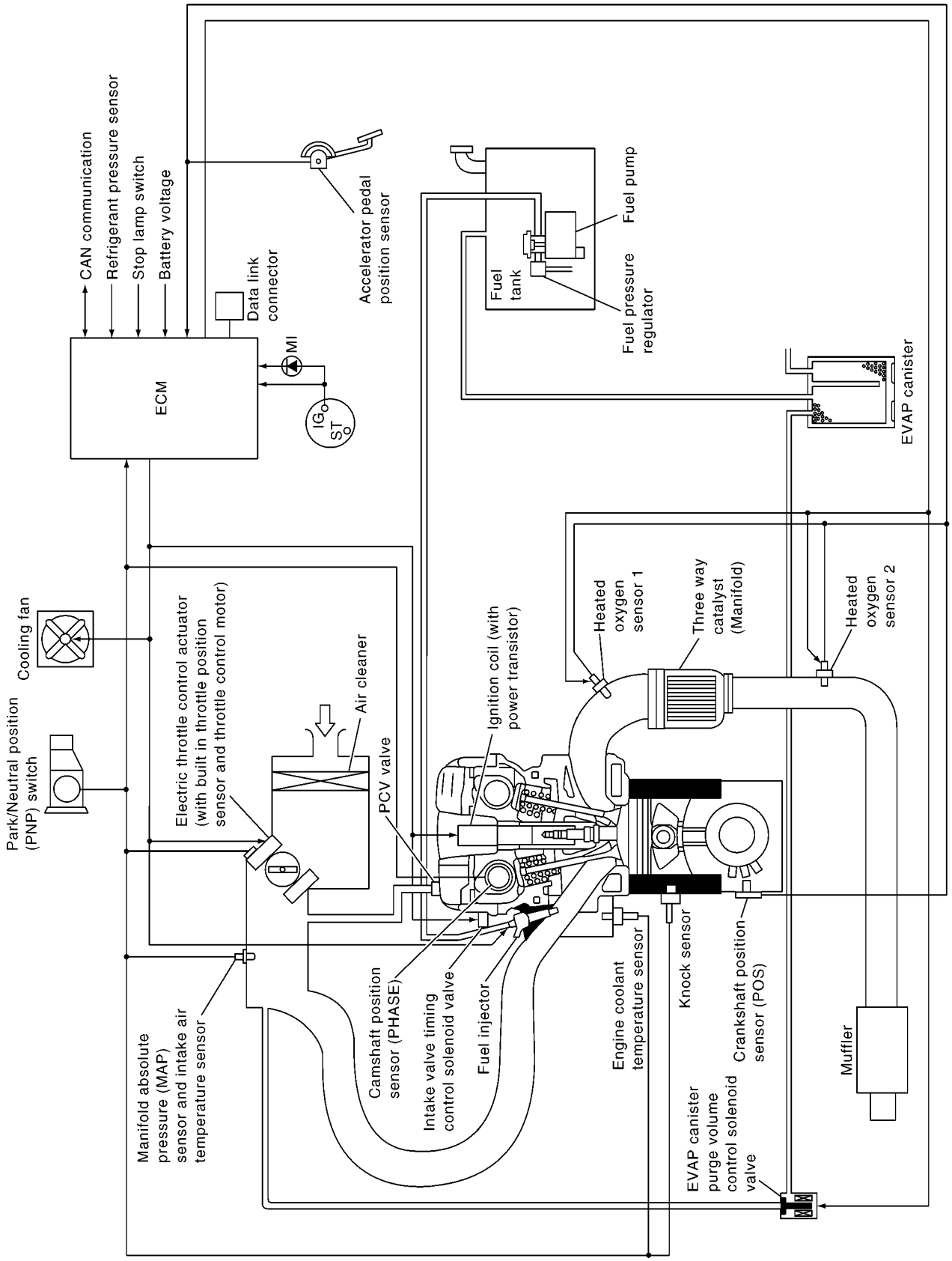

MBIB1551E

Multiport Fuel Injection (MFI) System

BBS0034W

INPUT/OUTPUT SIGNAL CHART

Sensor	Input Signal to ECM	ECM Function	Actuator
Crankshaft position sensor (POS) Camshaft position sensor (PHASE)	Engine speed*3 Piston position	Fuel injection & mixture ratio control	Fuel injector
Manifold absolute pressure sensor	Amount of intake air		
Engine coolant temperature sensor	Engine coolant temperature		
Heated oxygen sensor 1	Density of oxygen in exhaust gas		
Throttle position sensor	Throttle position		
Accelerator pedal position sensor	Accelerator pedal position		
Park/neutral position (PNP) switch	Gear position		
Knock sensor	Engine knocking condition		
Battery	Battery voltage*3		
EPS control unit	Power steering operation*2		
Heated oxygen sensor 2*1	Density of oxygen in exhaust gas		
Wheel sensor	Vehicle speed*2		
Air conditioner switch	Air conditioner operation*2		

*1: This sensor is not used to control the engine system under normal conditions.
*2: This signal is sent to the ECM through CAN communication line.
*3: ECM determines the start signal status by the signals of engine speed and battery voltage.

SYSTEM DESCRIPTION

The amount of fuel injected from the fuel injector is determined by the ECM. The ECM controls the length of time the valve remains open (injection pulse duration). The amount of fuel injected is a program value in the ECM memory. The program value is preset by engine operating conditions. These conditions are determined by input signals (for engine speed and intake air volume) from the crankshaft position sensor (POS), camshaft position sensor (PHASE) and the manifold absolute pressure sensor.

VARIOUS FUEL INJECTION INCREASE/DECREASE COMPENSATION

In addition, the amount of fuel injected is compensated to improve engine performance under various operating conditions as listed below.

<Fuel increase>

- During warm-up
- When starting the engine
- During acceleration
- Hot-engine operation
- High-load, high-speed operation

<Fuel decrease>

- During deceleration
- During high engine speed operation

MIXTURE RATIO FEEDBACK CONTROL (CLOSED LOOP CONTROL)

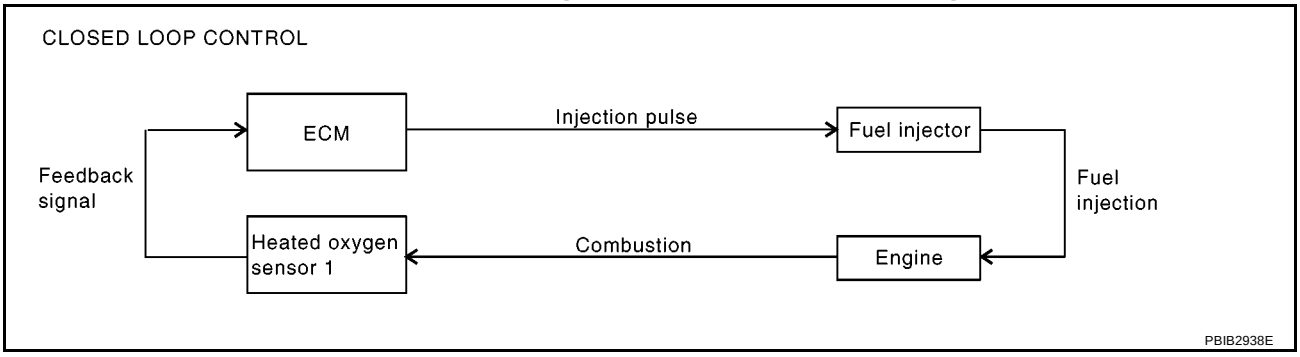

The mixture ratio feedback system provides the best air-fuel mixture ratio for driveability and emission control. The three way catalyst (manifold) can then better reduce CO, HC and NOx emissions. This system uses heated oxygen sensor 1 in the exhaust manifold to monitor whether the engine operation is rich or lean. The ECM adjusts the injection pulse width according to the sensor voltage signal. For more information about heated oxygen sensor 1, refer to EC-577 . This maintains the mixture ratio within the range of stoichiometric (ideal air-fuel mixture).
This stage is referred to as the closed loop control condition.
Heated oxygen sensor 2 is located downstream of the three way catalyst (manifold). Even if the switching characteristics of heated oxygen sensor 1 shift, the air-fuel ratio is controlled to stoichiometric by the signal from heated oxygen sensor 2.

Open Loop Control

The open loop system condition refers to when the ECM detects any of the following conditions. Feedback control stops in order to maintain stabilized fuel combustion.

- Deceleration and acceleration
- High-load, high-speed operation
- Malfunction of heated oxygen sensor 1 or its circuit
- Insufficient activation of heated oxygen sensor 1 at low engine coolant temperature
- High engine coolant temperature
- During warm-up
- When starting the engine

MIXTURE RATIO SELF-LEARNING CONTROL

The mixture ratio feedback control system monitors the mixture ratio signal transmitted from heated oxygen sensor 1. This feedback signal is then sent to the ECM. The ECM controls the basic mixture ratio as close to the theoretical mixture ratio as possible. However, the basic mixture ratio is not necessarily controlled as originally designed. Both manufacturing differences (i.e., manifold absolute pressure sensor silicon diaphragm) and characteristic changes during operation (i.e., fuel injector clogging) directly affect mixture ratio.
Accordingly, the difference between the basic and theoretical mixture ratios is monitored in this system. This is then computed in terms of “injection pulse duration” to automatically compensate for the difference between the two ratios.
“Fuel trim” refers to the feedback compensation value compared against the basic injection duration. Fuel trim includes short term fuel trim and long term fuel trim.
“Short term fuel trim” is the short-term fuel compensation used to maintain the mixture ratio at its theoretical value. The signal from heated oxygen sensor 1 indicates whether the mixture ratio is RICH or LEAN compared to the theoretical value. The signal then triggers a reduction in fuel volume if the mixture ratio is rich, and an increase in fuel volume if it is lean.
“Long term fuel trim” is overall fuel compensation carried out long-term to compensate for continual deviation of the short term fuel trim from the central value. Such deviation will occur due to individual engine differences, wear over time and changes in the usage environment.

FUEL INJECTION TIMING

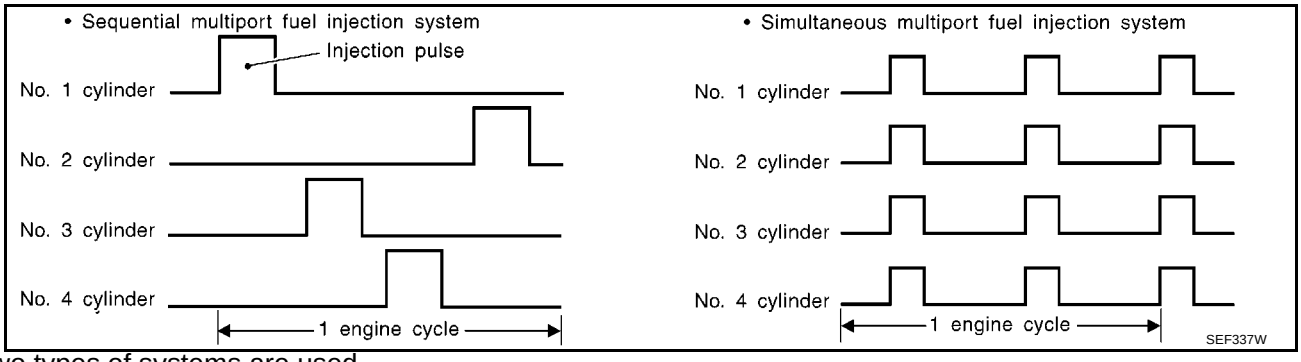

Two types of systems are used.

Sequential Multiport Fuel Injection System

Fuel is injected into each cylinder during each engine cycle according to the firing order. This system is used when the engine is running.

Simultaneous Multiport Fuel Injection System

Fuel is injected simultaneously into all four cylinders twice each engine cycle. In other words, pulse signals of the same width are simultaneously transmitted from the ECM.
The four fuel injectors will then receive the signals two times for each engine cycle.
This system is used when the engine is being started and/or if the fail-safe system (CPU) is operating.

FUEL SHUT-OFF

Fuel to each cylinder is cut off during deceleration or operation of the engine at excessively high speeds or operation of the vehicle at excessively high speeds.

Electronic Ignition (EI) System

BBS0034X

INPUT/OUTPUT SIGNAL CHART

Sensor	Input Signal to ECM	ECM Function	Actuator
Crankshaft position sensor (POS) Camshaft position sensor (PHASE)	Engine speed*2 Piston position	Ignition timing control	Power transistor
Manifold absolute pressure sensor	Amount of intake air		
Engine coolant temperature sensor	Engine coolant temperature		
Throttle position sensor	Throttle position		
Accelerator pedal position sensor	Accelerator pedal position		
Knock sensor	Engine knocking		
Park/neutral position (PNP) switch	Gear position		
Battery	Battery voltage*2		
Wheel sensor	Vehicle speed*1		

*1: This signal is sent to the ECM through CAN communication line.
*2: ECM determines the start signal status by the signals of engine speed and battery voltage.

SYSTEM DESCRIPTION

Firing order: 1 - 3 - 4 - 2
The ignition timing is controlled by the ECM to maintain the best air-fuel ratio for every running condition of the engine. The ignition timing data is stored in the ECM.
The ECM receives information such as the injection pulse width and camshaft position sensor signal. Computing this information, ignition signals are transmitted to the power transistor.
During the following conditions, the ignition timing is revised by the ECM according to the other data stored in the ECM.

- At starting
- During warm-up
- At idle
- At low battery voltage
- During acceleration

The knock sensor retard system is designed only for emergencies. The basic ignition timing is programmed within the anti-knocking zone, if recommended fuel is used under dry conditions. The retard system does not operate under normal driving conditions. If engine knocking occurs, the knock sensor monitors the condition. The signal is transmitted to the ECM. The ECM retards the ignition timing to eliminate the knocking condition.

Fuel Cut Control (at No Load and High Engine Speed)

BBS0034Z

INPUT/OUTPUT SIGNAL CHART

Sensor	Input Signal to ECM	ECM Function	Actuator
Park/neutral position (PNP) switch	Neutral position	Fuel cut control	Fuel injector
Accelerator pedal position sensor	Accelerator pedal position		
Engine coolant temperature sensor	Engine coolant temperature		
Crankshaft position sensor (POS) Camshaft position sensor (PHASE)	Engine speed		
Wheel sensor	Vehicle speed*		

*: This signal is sent to the ECM through CAN communication line.

SYSTEM DESCRIPTION

If the engine speed is above 2,500 rpm with no load (for example, the shift position is neutral and engine speed is over 2,500 rpm) fuel will be cut off after some time. The exact time when the fuel is cut off varies based on engine speed.
Fuel cut will operate until the engine speed reaches 2,000 rpm, then fuel cut is cancelled.

NOTE:
This function is different from deceleration control listed under EC-463, "Multiport Fuel Injection (MFI) System"
.

AIR CONDITIONING CUT CONTROL

PFP:23710

Input/Output Signal Chart

BBS003ZG

Sensor	Input Signal to ECM	ECM Function	Actuator
Air conditioner switch	Air conditioner ON signal*1	Air conditioner cut control	Air conditioner relay
Accelerator pedal position sensor	Accelerator pedal position		
Crankshaft position sensor (POS) Camshaft position sensor (PHASE)	Engine speed*2		
Engine coolant temperature sensor	Engine coolant temperature		
Refrigerant pressure sensor	Refrigerant pressure		
Wheel sensor	Vehicle speed*1		
EPS control unit	Power steering operation*1		
Battery	Battery voltage*2		

*1: This signal is sent to the ECM through CAN communication line.
*2: ECM determines the start signal status by the signals of engine speed and battery voltage.

SYSTEM DESCRIPTION

This system improves engine operation when the air conditioner is used.
Under the following conditions, the air conditioner is turned OFF.

- When the accelerator pedal is fully depressed.
- When cranking the engine.
- At high engine speeds.
- When the engine coolant temperature becomes excessively high.
- When operating power steering during low engine speed or low vehicle speed.
- When engine speed is excessively low.
- When refrigerant pressure is excessively low or high.

CAN COMMUNICATION

PFP:23710

System Description

BBS003ZH

CAN (Controller Area Network) is a serial communication line for real time application. It is an on-vehicle multiplex communication line with high data communication speed and excellent error detection ability. Many electronic control units are equipped onto a vehicle, and each control unit shares information and links with other control units during operation (not independent). In CAN communication, control units are connected with 2 communication lines (CAN H line, CAN L line) allowing a high rate of information transmission with less wiring. Each control unit transmits/receives data but selectively reads required data only.
Refer to LAN-21, "CAN COMMUNICATION" , about CAN communication for detail.

EVAPORATIVE EMISSION SYSTEM

PFP:14950

Description

BBS003DD

SYSTEM DESCRIPTION

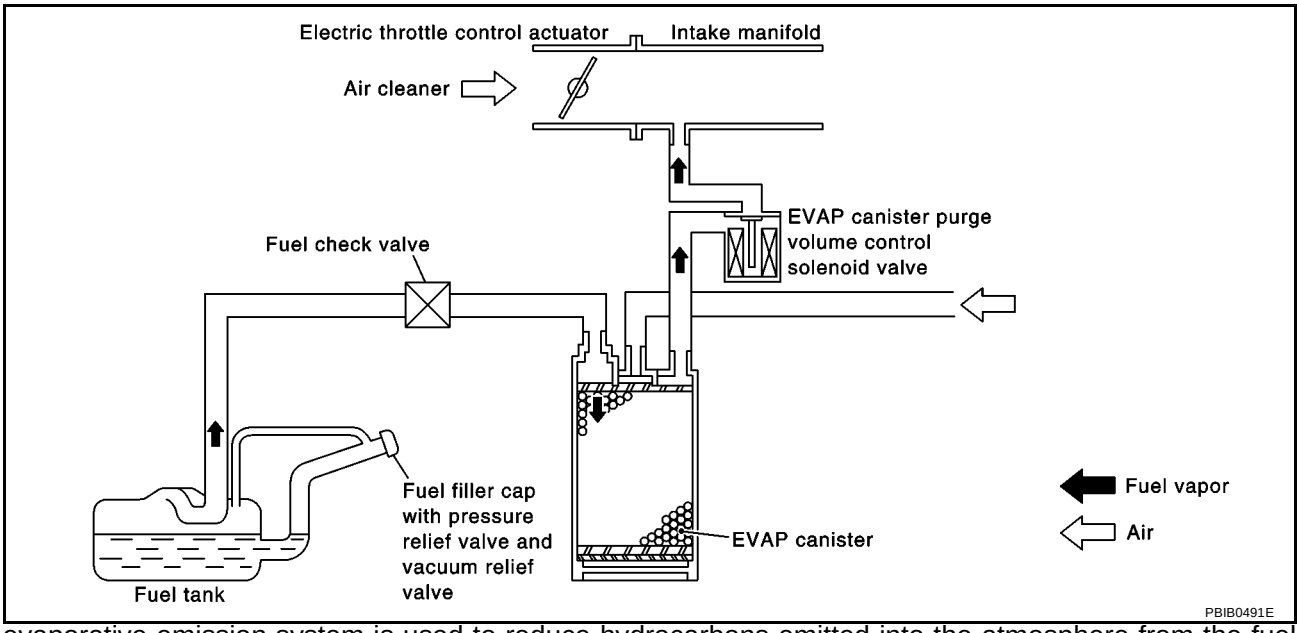

The evaporative emission system is used to reduce hydrocarbons emitted into the atmosphere from the fuel system. This reduction of hydrocarbons is accomplished by activated charcoals in the EVAP canister.

The fuel vapor in the sealed fuel tank is led into the EVAP canister which contains activated carbon and the vapor is stored there when the engine is not operating or when refueling to the fuel tank.

The vapor in the EVAP canister is purged by the air through the purge line to the intake manifold when the engine is operating. EVAP canister purge volume control solenoid valve is controlled by ECM. When the engine operates, the flow rate of vapor controlled by EVAP canister purge volume control solenoid valve is proportionally regulated as the air flow increases.

EVAP canister purge volume control solenoid valve also shuts off the vapor purge line during decelerating and idling.

EVAPORATIVE EMISSION LINE DRAWING

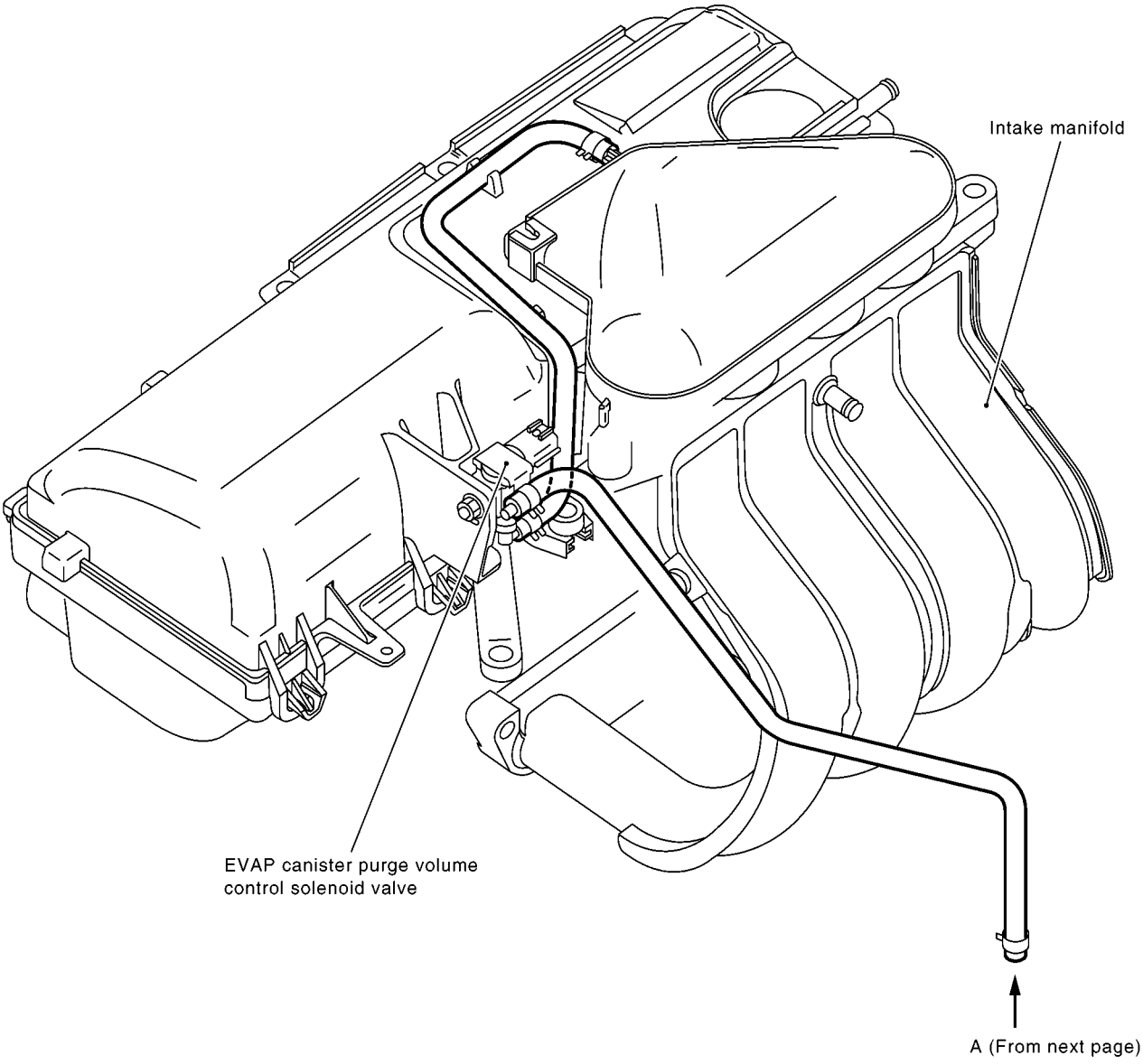

NOTE: Do not use soapy water or any type of solvent while installing vacuum hose or purge hoses.

MBIB0544E

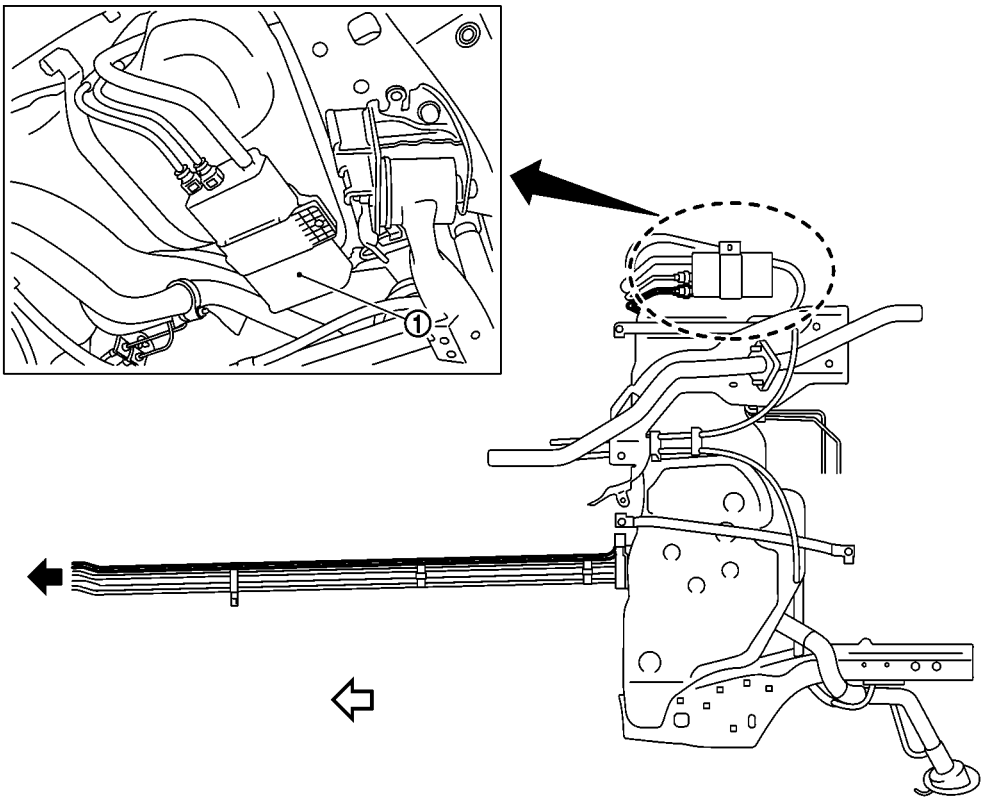

MBIB1450E

⇦ Vehicle front

⬅ To previous page

1. EVAP canister

Component Inspection

BBS003DE

EVAP CANISTER

Check EVAP canister as follows:

1. Block port (B).
2. Blow air into port (A) and check that it flows freely out of port (C).
3. Release blocked port (B).
4. Apply vacuum pressure to port (B) and check that vacuum pressure exists at the ports (A) and (C).
5. Block port (A) and (B).
6. Apply pressure to port (C) and check that there is no leakage.

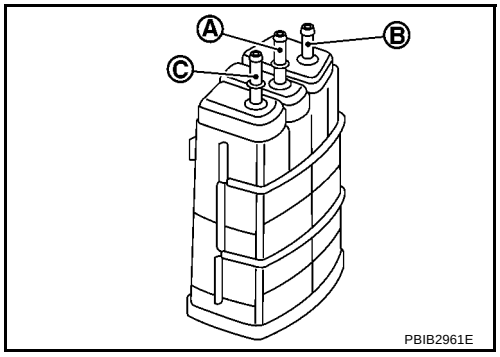

FUEL CHECK VALVE

1. Blow air through connector on fuel tank side.
   A considerable resistance should be felt and a portion of air flow should be directed toward the EVAP canister side.
2. Blow air through connector on EVAP canister side.
   Air flow should be smoothly directed toward fuel tank side.
3. If fuel check valve is suspected of not properly functioning in steps 1 and 2 above, replace it.

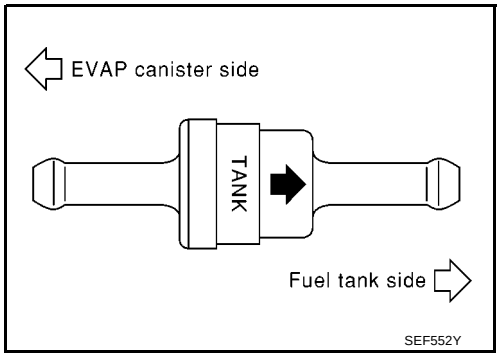

FUEL TANK VACUUM RELIEF VALVE (BUILT INTO FUEL FILLER CAP)

1. Wipe clean valve housing.

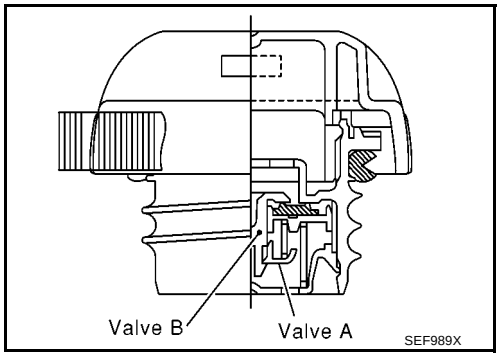

2. Check valve opening pressure and vacuum.

Pressure:	**15.3 - 20.0 kPa (0.153 - 0.200 bar, 0.156 - 0.204 kg/cm^2 , 2.22 - 2.90 psi)**
Vacuum:	**–6.0 to –3.4 kPa (–0.060 to –0.034 bar, –0.061 to –0.035 kg/cm^2 , –0.87 to –0.49 psi)**

3. If out of specification, replace fuel filler cap as an assembly.

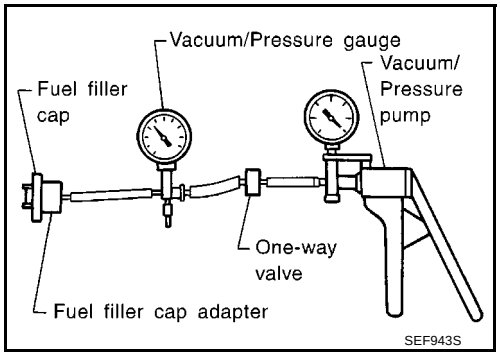

EVAP CANISTER PURGE VOLUME CONTROL SOLENOID VALVE

Refer to EC-743, "Component Inspection" .

NATS (NISSAN ANTI-THEFT SYSTEM)

PFP:25386

Description

BBS00359

- **If the security indicator lights up with the ignition switch in the ON position or "NATS MALFUNCTION" is displayed on "SELF-DIAG RESULTS" screen, perform self-diagnostic results mode with CONSULT-II using NATS program card. Refer to BL-215, "NATS (Nissan Anti-Theft System)" .**
- **Confirm no self-diagnostic results of NATS is displayed before touching "ERASE" in "SELF-DIAG RESULTS" mode with CONSULT-II.**
- **When replacing ECM, initialization of NATS system and registration of all NATS ignition key IDs must be carried out with CONSULT-II using NATS program card.**
  Therefore, be sure to receive all keys from vehicle owner.
  Regarding the procedures of NATS initialization and all NATS ignition key ID registration, refer to CONSULT-II Operation Manual, NATS.

SELF DIAG RESULTS	
DTC RESULTS	TIME
NATS MALFUNCTION [P1610]	0

SEF515Y

POSITIVE CRANKCASE VENTILATION

PFP:11810

Description

BBS003DF

SYSTEM DESCRIPTION

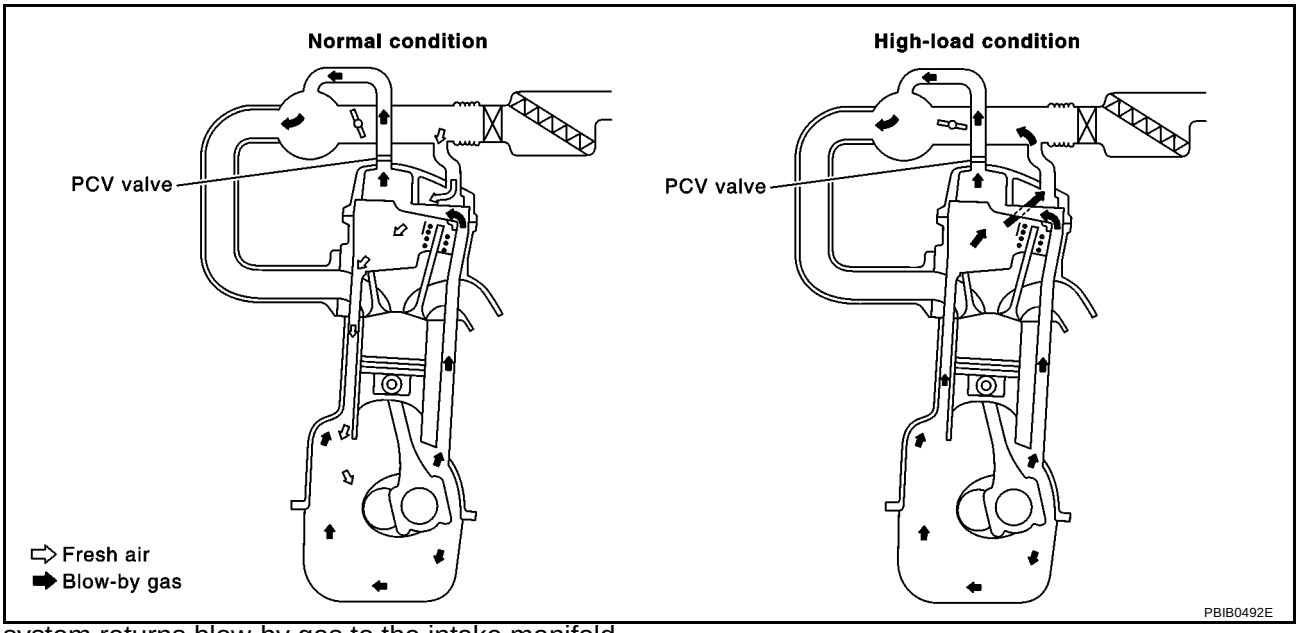

This system returns blow-by gas to the intake manifold.

The positive crankcase ventilation (PCV) valve is provided to conduct crankcase blow-by gas to the intake manifold. During partial throttle operation of the engine, the intake manifold sucks the blow-by gas through the PCV valve. Normally, the capacity of the valve is sufficient to handle any blow-by and a small amount of ventilating air. The ventilating air is then drawn from the air inlet tubes into the crankcase. In this process the air passes through the hose connecting air inlet tubes to rocker cover. Under full-throttle condition, the manifold vacuum is insufficient to draw the blow-by flow through the valve. The flow goes through the hose connection in the reverse direction.

On vehicles with an excessively high blow-by, the valve does not meet the requirement. This is because some of the flow will go through the hose connection to the air inlet tubes under all conditions.

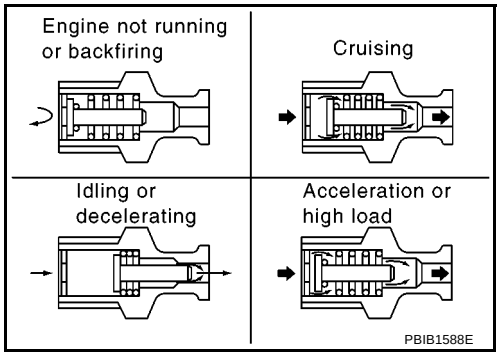

Component Inspection

BBS003DG

PCV (POSITIVE CRANKCASE VENTILATION) VALVE

With engine running at idle, remove PCV valve from rocker cover. A properly working valve makes a hissing noise as air passes through it. A strong vacuum should be felt immediately when a finger is placed over valve inlet.

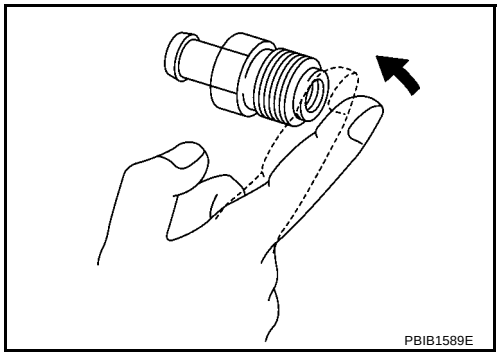

PCV VALVE VENTILATION HOSE

1. Check hoses and hose connections for leaks.
2. Disconnect all hoses and clean with compressed air. If any hose cannot be freed of obstructions, replace.

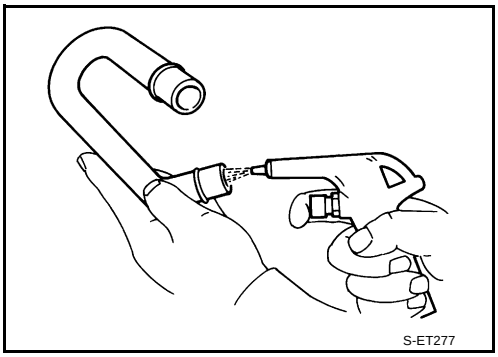

ON BOARD DIAGNOSTIC (OBD) SYSTEM

PFP:00028

Introduction

BBS00356

The ECM has an on board diagnostic system, which detects malfunctions related to engine sensors or actuators. The ECM also records various emission-related diagnostic information including:

Emission-related diagnostic information
Diagnostic Trouble Code (DTC)
Freeze Frame data
1st Trip Diagnostic Trouble Code (1st Trip DTC)
1st Trip Freeze Frame data

The above information can be checked using procedures listed in the table below.

×: Applicable —: Not applicable

	DTC	1st trip DTC	Freeze Frame data	1st trip Freeze Frame data
CONSULT-II	×	×	×	×
ECM	×	×*	—	—

*: When DTC and 1st trip DTC simultaneously appear on the display, they cannot be clearly distinguished from each other.

The malfunction indicator (MI) on the instrument panel lights up when the same malfunction is detected in two consecutive trips (Two trip detection logic), or when the ECM enters fail-safe mode. (Refer to EC-498 .)

Two Trip Detection Logic

BBS00357

When a malfunction is detected for the first time, 1st trip DTC and 1st trip Freeze Frame data are stored in the ECM memory. The MI will not light up at this stage. <1st trip>
If the same malfunction is detected again during the next drive, the DTC and Freeze Frame data are stored in the ECM memory, and the MI lights up. The MI lights up at the same time when the DTC is stored. <2nd trip>
The “trip” in the “Two Trip Detection Logic” means a driving mode in which self-diagnosis is performed during vehicle operation.
When there is an open circuit on MI circuit, the ECM can not warn the driver by lighting up MI when there is a malfunction on engine control system.
Therefore, when electrical controlled throttle and part of ECM related diagnoses are continuously detected as NG for 5 trips, ECM warns the driver that engine control system has malfunction and MI circuit is open by means of operating fail-safe function.
The fail-safe function also operate when above diagnoses except MI circuit are detected and demands the driver to repair the malfunction.

Engine operating condition in fail-safe mode	Engine speed will not rise more than 2,500 rpm due to the fuel cut

Emission-related Diagnostic Information

BBS00358

EMISSION-RELATED DIAGNOSTIC INFORMATION ITEMS

×: Applicable —: Not applicable

Items (CONSULT-II screen terms)	DTC*1		Trip	MI lighting up	Reference page
	CONSULT-II	ECM*2			
CAN COMM CIRCUIT	U1001	1001*3	2	—	EC-549
CONTROL UNIT(CAN)	U1010	1010	2	—	EC-552
NO DTC IS DETECTED. FURTHER TESTING MAY BE REQUIRED.	**P0000**	**0000**	—	—	—
INT/V TIM CONT-B1	P0011	0011	2	—	EC-554
ABSL PRES SEN/CIRC	P0107	0107	2	×	EC-559
ABSL PRES SEN/CIRC	P0108	0108	2	×	EC-559
ECT SEN/CIRC	P0117	0117	2	×	EC-565
ECT SEN/CIRC	P0118	0118	2	×	EC-565
TP SEN 2/CIRC	P0122	0122	1	×	EC-570

Items (CONSULT-II screen terms)	DTC*1		Trip	MI lighting up	Reference page
	CONSULT-II	ECM*2			
TP SEN 2/CIRC	P0123	0123	1	×	EC-570
HO2S1 (B1)	P0132	0132	2	×	EC-577
HO2S1 (B1)	P0134	0134	2	×	EC-584
HO2S2 (B1)	P0138	0138	2	×	EC-591
TP SEN 1/CIRC	P0222	0222	1	×	EC-598
TP SEN 1/CIRC	P0223	0223	1	×	EC-598
KNOCK SEN/CIRC-B1	P0327	0327	2	—	EC-605
KNOCK SEN/CIRC-B1	P0328	0328	2	—	EC-605
CKP SEN/CIRCUIT	P0335	0335	2	×	EC-609
CMP SEN/CIRC-B1	P0340	0340	2	×	EC-616
ECM	P0605	0605	1 or 2	× or —	EC-623
ECM BACK UP/CIRCUIT	P1065	1065	2	×	EC-626
INT/V TIM V/CIR-B1	P1111	1111	2	×	EC-630
ETC ACTR	P1121	1121	1	×	EC-635
ETC FUNCTION/CIRC	P1122	1122	1	×	EC-637
ETC MOT PWR	P1124	1124	1	×	EC-643
ETC MOT PWR	P1126	1126	1	×	EC-643
ETC MOT	P1128	1128	1	×	EC-649
INTAKE ERROR	P1171	1171	1	×	EC-654
TCS C/U FUNCTN	P1211	1211	2	—	EC-660
TCS/CIRC	P1212	1212	2	—	EC-661
ENG OVER TEMP	P1217	1217	1	×	EC-662
CTP LEARNING	P1225	1225	2	—	EC-676
CTP LEARNING	P1226	1226	2	—	EC-678
SENSOR POWER/CIRC	P1229	1229	1	×	EC-680
NATS MALFUNCTION	P1610 - P1615	1610 - 1615	2	—	BL-215
P-N POS SW/CIRCUIT	P1706	1706	2	×	EC-688
BRAKE SW/CIRCUIT	P1805	1805	1	×	EC-693
APP SEN 1/CIRC	P2122	2122	1	×	EC-699
APP SEN 1/CIRC	P2123	2123	1	×	EC-699
APP SEN 2/CIRC	P2127	2127	1	×	EC-708
APP SEN 2/CIRC	P2128	2128	1	×	EC-708
TP SENSOR	P2135	2135	1	×	EC-718
APP SENSOR	P2138	2138	1	×	EC-725

*1: 1st trip DTC No. is the same as DTC No.
*2: In Diagnostic Test Mode II (Self-diagnostic results), this number is controlled by NISSAN.
*3: The troubleshooting for this DTC needs CONSULT-II.

DTC AND 1ST TRIP DTC

The 1st trip DTC (whose number is the same as the DTC number) is displayed for the latest self-diagnostic result obtained. If the ECM memory was cleared previously, and the 1st trip DTC did not reoccur, the 1st trip DTC will not be displayed.
If a malfunction is detected during the 1st trip, the 1st trip DTC is stored in the ECM memory. The MI will not light up (two trip detection logic). If the same malfunction is not detected in the 2nd trip (meeting the required driving pattern), the 1st trip DTC is cleared from the ECM memory. If the same malfunction is detected in the 2nd trip, both the 1st trip DTC and DTC are stored in the ECM memory and the MI lights up. In other words,

the DTC is stored in the ECM memory and the MI lights up when the same malfunction occurs in two consecutive trips. If a 1st trip DTC is stored and a non-diagnostic operation is performed between the 1st and 2nd trips, only the 1st trip DTC will continue to be stored.
For fail-safe items, DTC is stored in the ECM memory even in the 1st trip.
Procedures for clearing the DTC and the 1st trip DTC from the ECM memory are described in EC-478, "HOW TO ERASE EMISSION-RELATED DIAGNOSTIC INFORMATION"
When a 1st trip DTC is detected, check, print out or write down and erase (1st trip) DTC and Freeze Frame data as specified in Work Flow procedure Step 2, refer to EC-492, "WORK FLOW" . Then perform DTC Confirmation Procedure or Overall Function Check to try to duplicate the malfunction. If the malfunction is duplicated, the item requires repair.

How to Read DTC and 1st Trip DTC

DTC and 1st trip DTC can be read by the following methods.

With CONSULT-II

CONSULT-II displays the DTC in “SEFL-DIAG RESULTS” mode. Examples: P0117, P0340, P1065, etc.
(CONSULT-II also displays the malfunctioning component or system.)

Without CONSULT-II

The number of blinks of the MI in the Diagnostic Test Mode II (Self-Diagnostic Results) indicates the DTC. Example: 0107, 0340, 1065 etc.

- **1st trip DTC No. is the same as DTC No.**
- **Output of a DTC indicates a malfunction. However, the Diagnostic Test Mode II do not indicate whether the malfunction is still occurring or has occurred in the past and has returned to normal. CONSULT-II can identify malfunction status as shown below. Therefore, using CONSULT-II (if available) is recommended.**

A sample of CONSULT-II display for DTC and 1st trip DTC is shown below. DTC or 1st trip DTC of a malfunction is displayed in SELF-DIAGNOSTIC RESULTS mode of CONSULT-II. Time data indicates how many times the vehicle was driven after the last detection of a DTC.
If the DTC is being detected currently, the time data will be [0].
If a 1st trip DTC is stored in the ECM, the time data will be [1t].

DTC display

SELF DIAG RESULTS	
DTC RESULTS	TIME
CKP SEN/CIRCUIT [P0335]	0

1st trip DTC display

SELF DIAG RESULTS	
DTC RESULTS	TIME
CKP SEN/CIRCUIT [P0335]	1t

PBIB0911E

FREEZE FRAME DATA AND 1ST TRIP FREEZE FRAME DATA

The ECM records the driving conditions such as fuel system status, calculated load value, engine coolant temperature, short term fuel trim, long term fuel trim, engine speed, vehicle speed, base fuel schedule and intake air temperature at the moment a malfunction is detected.
Data which are stored in the ECM memory, along with the 1st trip DTC, are called 1st trip freeze frame data. The data, stored together with the DTC data, are called freeze frame data and displayed on CONSULT-II. For details, see EC-521, "Freeze Frame Data and 1st Trip Freeze Frame Data" .
Only one set of freeze frame data (either 1st trip freeze frame data or freeze frame data) can be stored in the ECM. 1st trip freeze frame data is stored in the ECM memory along with the 1st trip DTC. There is no priority for 1st trip freeze frame data and it is updated each time a different 1st trip DTC is detected. However, once freeze frame data (2nd trip detection/MI on) is stored in the ECM memory, 1st trip freeze frame data is no longer stored. Remember, only one set of freeze frame data can be stored in the ECM. Both 1st trip freeze frame data and freeze frame data (along with the DTCs) are cleared when the ECM memory is erased. Procedures for clearing the ECM memory are described in EC-478, "HOW TO ERASE EMISSION-RELATED DIAGNOSTIC INFORMATION" .

HOW TO ERASE EMISSION-RELATED DIAGNOSTIC INFORMATION

How to Erase DTC

With CONSULT-II

The emission related diagnostic information in the ECM can be erased by selecting “ERASE” in the “SELF-DIAG RESULTS” mode with CONSULT-II.

1. If the ignition switch stays ON after repair work, be sure to turn ignition switch OFF once.
   Wait at least 10 seconds and then turn it ON (engine stopped) again.
2. Touch “ENGINE”.
3. Touch “SELF-DIAG RESULTS”.
4. Touch “ERASE”. (The DTC in the ECM will be erased.)

How to erase DTC (With CONSULT-II)

1. If the ignition switch stays “ON” after repair work, be sure to turn ignition switch “OFF” once.
   Wait at least 10 seconds and then turn it “ON” again.

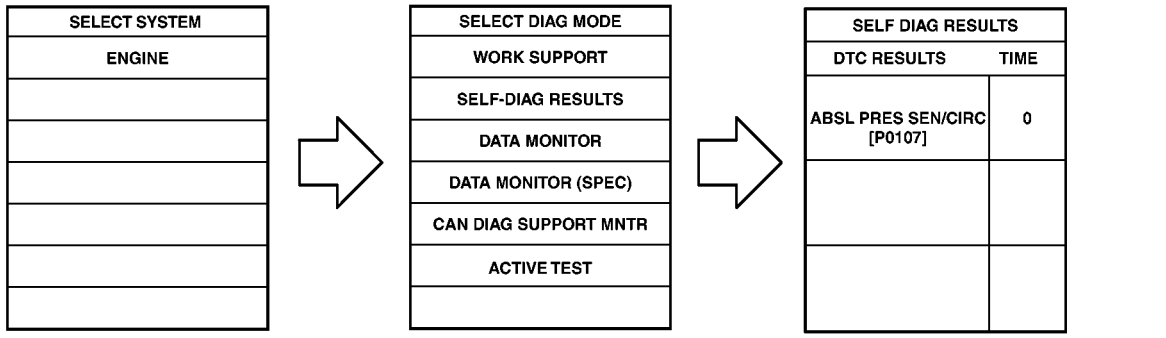

2. Turn **CONSULT-II** “ON” and touch “ENGINE”.
3. Touch “SELF-DIAG RESULTS”.
4. Touch “ERASE”. (The DTC in the ECM will be erased.)

MBIB1303E

Without CONSULT-II

1. If the ignition switch stays ON after repair work, be sure to turn ignition switch OFF once.
2. Wait at least 10 seconds and then turn it ON (engine stopped) again.
3. Change the diagnostic test mode from Mode II to Mode I by depressing the accelerator pedal. Refer to EC-480, "HOW TO SWITCH DIAGNOSTIC TEST MODE" .

- **If the battery is disconnected, the emission-related diagnostic information will be lost within 24 hours.**
- **The following data are cleared when the ECM memory is erased.**
  - Diagnostic trouble codes
  - 1st trip diagnostic trouble codes
  - Freeze frame data
  - 1st trip freeze frame data

Actual work procedures are explained using a DTC as an example. Be careful so that not only the DTC, but all of the data listed above, are cleared from the ECM memory during work procedures.

Malfunction Indicator (MI)

BBS0035A

DESCRIPTION

The MI is located on the instrument panel.

1. The MI will light up when the ignition switch is turned ON without the engine running. This is a bulb check.
   If the MI does not light up, refer to DI-32, "WARNING LAMPS" or see EC-800 .
2. When the engine is started, the MI should go off.
   If the MI remains on, the on board diagnostic system has detected an engine system malfunction.

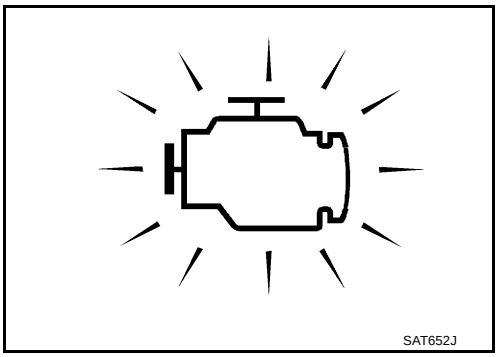

SAT652J

ON BOARD DIAGNOSTIC SYSTEM FUNCTION

The on board diagnostic system has the following four functions.

Diagnostic Test Mode	KEY and ENG. Status	Function	Explanation of Function
Mode I	Ignition switch in ON position Engine stopped	BULB CHECK	This function checks the MI bulb for damage (blown, open circuit, etc.). If the MI does not come on, check MI circuit.
	Engine running	MALFUNCTION WARNING	This is a usual driving condition. When a malfunction is detected twice in two consecutive driving cycles (two trip detection logic), the MI will light up to inform the driver that a malfunction has been detected. One trip detection diagnosis will light up or blink the MI in the 1st trip.
Mode II	Ignition switch in ON position Engine stopped	SELF-DIAGNOSTIC RESULTS	This function allows DTCs and 1st trip DTCs to be read.
	Engine running	HEATED OXYGEN SENSOR 1 MONITOR	This function allows the fuel mixture condition (lean or rich), monitored by heated oxygen sensor 1, to be read.

When there is an open circuit on MI circuit, the ECM can not warn the driver by lighting up MI when there is malfunction on engine control system.
Therefore, when electrical controlled throttle and part of ECM related diagnoses are continuously detected as NG for 5 trips, ECM warns the driver that engine control system has a malfunction and MI circuit is open by means of operating fail-safe function.
The fail-safe function also operate when above diagnoses except MI circuit are detected and demands the driver to repair the a malfunction.

Engine operating condition in fail-safe mode	Engine speed will not rise more than 2,500 rpm due to the fuel cut

MI Flashing without DTC

If the ECM is in Diagnostic Test Mode II, MI may flash when engine is running. In this case, check ECM diagnostic test mode. EC-480, "HOW TO SWITCH DIAGNOSTIC TEST MODE" .
How to switch the diagnostic test (function) modes, and details of the above functions are described later, EC-480, "HOW TO SWITCH DIAGNOSTIC TEST MODE" .
The following emission-related diagnostic information is cleared when the ECM memory is erased.

- Diagnostic trouble codes
- 1st trip diagnostic trouble codes
- Freeze frame data
- 1st trip freeze frame data

HOW TO SWITCH DIAGNOSTIC TEST MODE

NOTE:

- **It is better to count the time accurately with a clock.**
- **It is impossible to switch the diagnostic mode when an accelerator pedal position sensor circuit has a malfunction.**

- **Always ECM returns to Diagnostic Test Mode I after ignition switch is turned OFF.**

How to Set Diagnostic Test Mode II (Self-diagnostic Results)

1. Confirm that accelerator pedal is fully released, turn ignition switch ON and wait 3 seconds.
2. Repeat the following procedure quickly five times within 5 seconds.

a. Fully depress the accelerator pedal.
b. Fully release the accelerator pedal.

3. Wait 7 seconds, fully depress the accelerator pedal and keep it for approx. 10 seconds until the MI starts blinking.
4. Fully release the accelerator pedal.
   ECM has entered to Diagnostic Test Mode II (Self-diagnostic results).

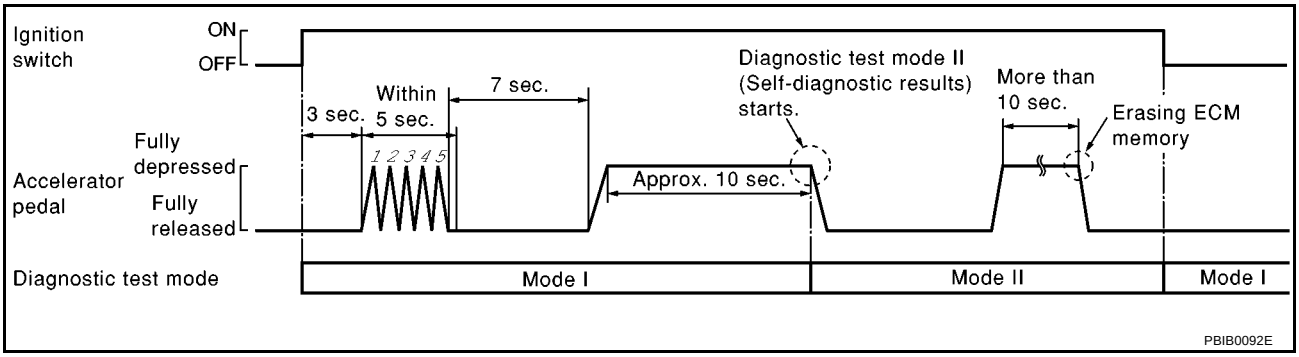

How to Set Diagnostic Test Mode II (Heated Oxygen Sensor 1 Monitor)

1. Set the ECM in Diagnostic Test Mode II (Self-diagnostic results). Refer to EC-481, "How to Set Diagnostic Test Mode II (Self-diagnostic Results)" .
2. Start Engine.
   ECM has entered to Diagnostic Test Mode II (Heated oxygen sensor 1 monitor).

How to Erase Diagnostic Test Mode II (Self-diagnostic Results)

1. Set ECM in Diagnostic Test Mode II (Self-diagnostic results). Refer to EC-481, "How to Set Diagnostic Test Mode II (Self-diagnostic Results)" .
2. Fully depress the accelerator pedal and keep it for more than 10 seconds.
   The emission-related diagnostic information has been erased from the backup memory in the ECM.
3. Fully release the accelerator pedal, and confirm the DTC 0000 is displayed.

DIAGNOSTIC TEST MODE I — BULB CHECK

In this mode, the MI on the instrument panel should stay ON. If it remains OFF, check the bulb. Refer to DI-32, "WARNING LAMPS" or see EC-800 .

DIAGNOSTIC TEST MODE I — MALFUNCTION WARNING

MI	Condition
ON	When the malfunction is detected.
OFF	No malfunction.

- These DTC numbers are clarified in Diagnostic Test Mode II (SELF-DIAGNOSTIC RESULTS)

DIAGNOSTIC TEST MODE II — SELF-DIAGNOSTIC RESULTS

In this mode, the DTC and 1st trip DTC are indicated by the number of blinks of the MI as shown below.
The DTC and 1st trip DTC are displayed at the same time. If the MI does not illuminate in diagnostic test mode I (Malfunction warning), all displayed items are 1st trip DTCs. If only one code is displayed when the MI illuminates in diagnostic test mode II (SELF-DIAGNOSTIC RESULTS), it is a DTC; if two or more codes are dis-

played, they may be either DTCs or 1st trip DTCs. DTC No. is same as that of 1st trip DTC. These unidentified codes can be identified by using the CONSULT-II. A DTC will be used as an example for how to read a code.

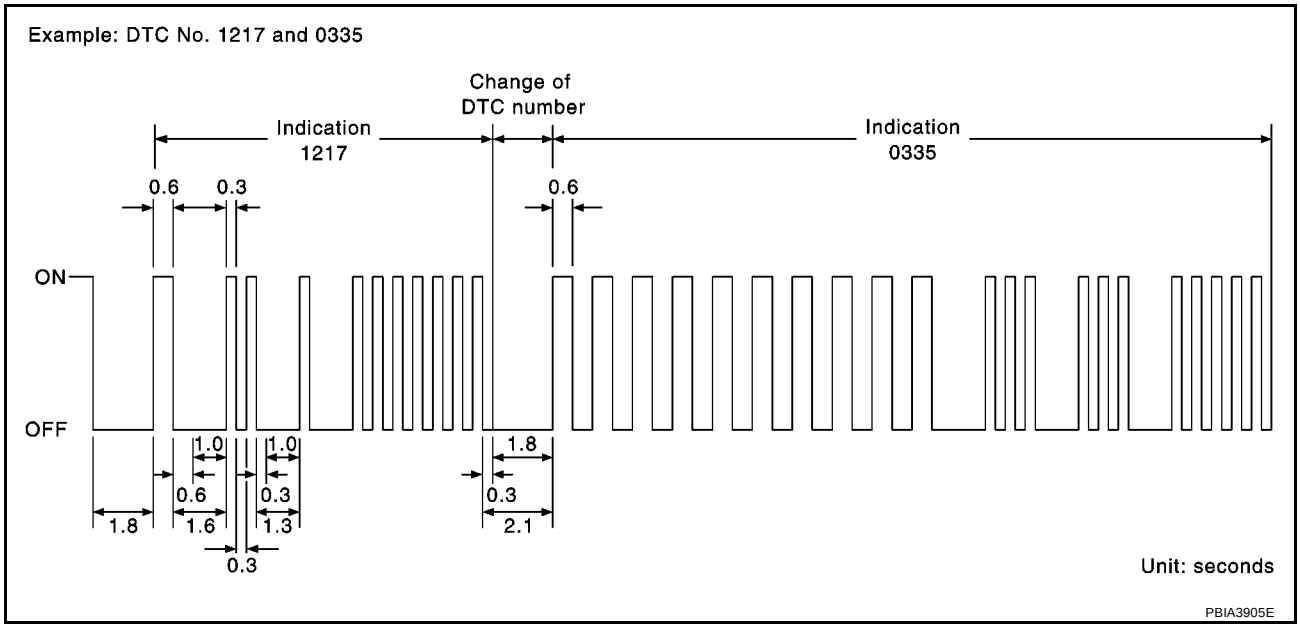

A particular trouble code can be identified by the number of four-digit numeral flashes. The “zero” is indicated by the number of ten flashes. The length of time the 1,000th-digit numeral flashes on and off is 1.2 seconds consisting of an ON (0.6-second) - OFF (0.6-second) cycle.
The 100th-digit numeral and lower digit numerals consist of a 0.3-second ON and 0.3-second OFF cycle.
A change from one digit numeral to another occurs at an interval of 1.0-second OFF. In other words, the later numeral appears on the display 1.3 seconds after the former numeral has disappeared.
A change from one trouble code to another occurs at an interval of 1.8-second OFF.
In this way, all the detected malfunctions are classified by their DTC numbers. The DTC 0000 refers to no malfunction. (See EC-451, "INDEX FOR DTC")

How to Erase Diagnostic Test Mode II (Self-diagnostic Results)

The DTC can be erased from the back up memory in the ECM by depressing accelerator pedal. Refer to EC-480, "HOW TO SWITCH DIAGNOSTIC TEST MODE" .

- **If the battery is disconnected, the DTC will be lost from the backup memory within 24 hours.**
- **Be careful not to erase the stored memory before starting trouble diagnoses.**

DIAGNOSTIC TEST MODE II — HEATED OXYGEN SENSOR 1 MONITOR

In this mode, the MI displays the condition of the fuel mixture (lean or rich) which is monitored by the heated oxygen sensor 1.

MI	Fuel mixture condition in the exhaust gas	Air-fuel ratio feedback control condition
ON	Lean	Closed loop system
OFF	Rich	
*Remains ON or OFF	Any condition	Open loop system

*: Maintains conditions just before switching to open loop.

To check the heated oxygen sensor 1 function, start engine in the Diagnostic Test Mode II and warm it up until engine coolant temperature indicator points to the middle of the gauge.
Next run engine at about 2,000 rpm for about 2 minutes under no load conditions. Then make sure that the MI comes ON more than 5 times within 10 seconds with engine running at 2,000 rpm under no load.

BASIC SERVICE PROCEDURE

PFP:00018

Basic Inspection

BBS0035E

1. INSPECTION START

1. Check service records for any recent repairs that may indicate a related malfunction, or a current need for scheduled maintenance.
2. Open engine hood and check the following:
- Harness connectors for improper connections
- Wiring harness for improper connections, pinches and cut
- Vacuum hoses for splits, kinks and improper connections
- Hoses and ducts for leaks
- Air cleaner clogging
- Gasket
3. Confirm that electrical or mechanical loads are not applied.
- Headlamp switch is OFF.
- Air conditioner switch is OFF.
- Rear window defogger switch is OFF.
- Steering wheel is in the straight-ahead position, etc.

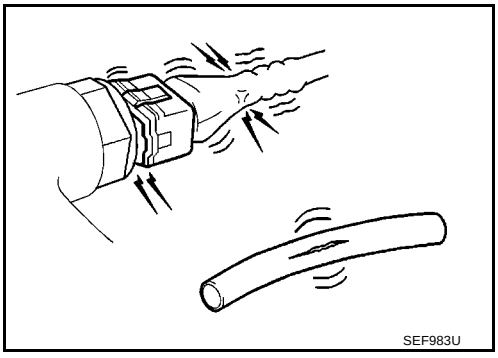

4. Start engine and warm it up until engine coolant temperature indicator points the middle of gauge.
   Ensure engine stays below 1,000 rpm.

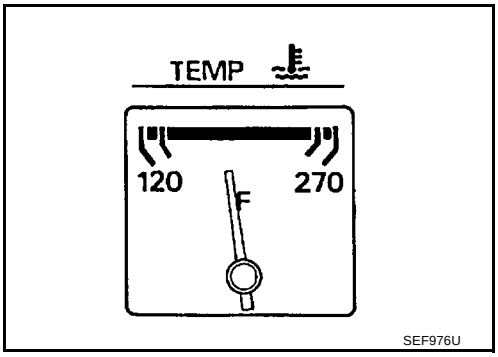

5. Run engine at about 2,000 rpm for about 2 minutes under no load.
6. Make sure that no DTC is displayed with CONSULT-II.

OK or NG

OK >> GO TO 3.
NG >> GO TO 2.

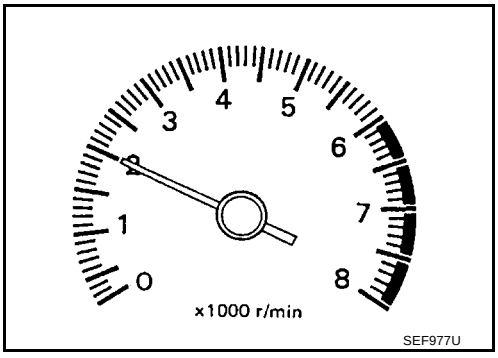

2. REPAIR OR REPLACE

Repair or replace components as necessary according to corresponding Diagnostic Procedure.

>> GO TO 3

3. CHECK TARGET IDLE SPEED

With CONSULT-II

1. Run engine at about 2,000 rpm for about 2 minutes under no load.
2. Rev engine (2,000 to 3,000 rpm) two or three times under no load, then run engine at idle speed for about 1 minute.

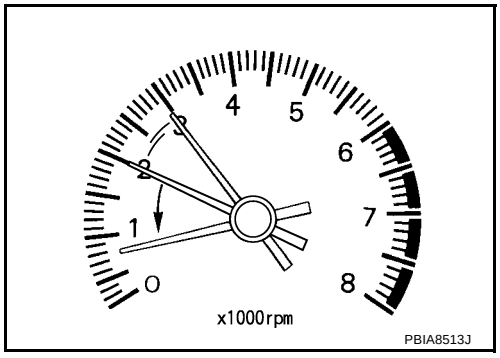

3. Read idle speed in “DATA MONITOR” mode with CONSULT-II. Refer to EC-486, "IDLE SPEED" .

   650 ± 50 rpm (in Neutral position)

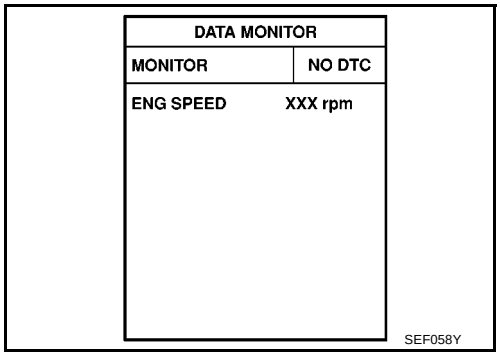

Without CONSULT-II

1. Run engine at about 2,000 rpm for about 2 minutes under no load.
2. Rev engine (2,000 to 3,000 rpm) two or three times under no load, then run engine at idle speed for about 1 minute.
3. Check idle speed. Refer to EC-486, "IDLE SPEED" .

   650 ± 50 rpm (in Neutral position)

OK or NG

OK >> **INSPECTION END**
NG >> GO TO 4.

4. PERFORM ACCELERATOR PEDAL RELEASED POSITION LEARNING

1. Stop engine.
2. Perform EC-486, "Accelerator Pedal Released Position Learning" .

>> GO TO 5.

5. PERFORM THROTTLE VALVE CLOSED POSITION LEARNING

Perform EC-486, "Throttle Valve Closed Position Learning" .

>> GO TO 6.

6. PERFORM IDLE AIR VOLUME LEARNING

Refer to EC-486, "Idle Air Volume Learning" .
Is Idle Air Volume Learning carried out successfully?

Yes or No

Yes >> GO TO 7.
No >> 1. Follow the instruction of Idle Air Volume Learning.
2. GO TO 4.

7. CHECK TARGET IDLE SPEED AGAIN

With CONSULT-II

1. Start engine and warm it up to normal operating temperature.
2. Read idle speed in “DATA MONITOR” mode with CONSULT-II.
Refer to EC-486, "IDLE SPEED" .

650 ± 50 rpm (in Neutral position)

Without CONSULT-II

1. Start engine and warm it up to normal operating temperature.
2. Check idle speed. Refer to EC-486, "IDLE SPEED" .

650 ± 50 rpm (in Neutral position)

OK or NG

OK >> **INSPECTION END**
NG >> GO TO 8.

8. DETECT MALFUNCTIONING PART

Check the following.

- Check camshaft position sensor (PHASE) and circuit. Refer to EC-616 .
- Check crankshaft position sensor (POS) and circuit. Refer to EC-609 .

OK or NG

OK >> GO TO 9.
NG >> 1. Repair or replace.
2. GO TO 4.

9. CHECK ECM FUNCTION

1. Substitute another known-good ECM to check ECM function. (ECM may be the cause of an incident, but this is a rare case.)
2. Perform initialization of NATS system and registration of all NATS ignition key IDs. Refer to EC-473, "Description" .

>> GO TO 4.

Idle Speed Check

BBS00351

IDLE SPEED

With CONSULT-II

Check idle speed in “DATA MONITOR” mode with CONSULT-II.

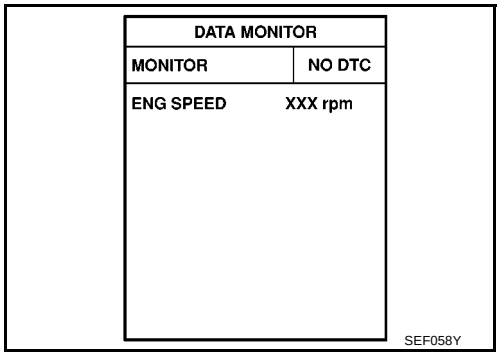

Without CONSULT-II

Check idle speed by installing the pulse type tachometer clamp on the loop wire or on suitable high-tension wire which installed between No. 1 ignition coil and No. 1 spark plug.

Accelerator Pedal Released Position Learning

BBS00352

DESCRIPTION

Accelerator Pedal Released Position Learning is an operation to learn the fully released position of the accelerator pedal by monitoring the accelerator pedal position sensor output signal. It must be performed each time harness connector of accelerator pedal position sensor or ECM is disconnected.

OPERATION PROCEDURE

1. Make sure that accelerator pedal is fully released.
2. Turn ignition switch ON and wait at least 2 seconds.
3. Turn ignition switch OFF and wait at least 10 seconds.
4. Turn ignition switch ON and wait at least 2 seconds.
5. Turn ignition switch OFF and wait at least 10 seconds.

Throttle Valve Closed Position Learning

BBS00353

DESCRIPTION

Throttle Valve Closed Position Learning is an operation to learn the fully closed position of the throttle valve by monitoring the throttle position sensor output signal. It must be performed each time harness connector of electric throttle control actuator or ECM is disconnected.

OPERATION PROCEDURE

1. Make sure that accelerator pedal is fully released.
2. Turn ignition switch ON.
3. Turn ignition switch OFF and wait at least 10 seconds.
   Make sure that throttle valve moves during above 10 seconds by confirming the operating sound.

Idle Air Volume Learning

BBS00354

DESCRIPTION

Idle Air Volume Learning is an operation to learn the idle air volume that keeps each engine within the specific range. It must be performed under any of the following conditions:

- Each time electric throttle control actuator or ECM is replaced.
- Idle speed is out of specification.

PREPARATION

Before performing Idle Air Volume Learning, make sure that all of the following conditions are satisfied.
Learning will be cancelled if any of the following conditions are missed for even a moment.

- Battery voltage: More than 12.9V (At idle)
- Engine coolant temperature: 70 - 100°C (158 - 212°F)
- PNP switch: ON
- Electric load switch: OFF

(Air conditioner, headlamp, rear window defogger)
On vehicles equipped with daytime light systems, set lighting switch to the 1st position to light only small lamps.

- Steering wheel: Neutral (Straight-ahead position)
- Vehicle speed: Stopped
- Transmission: Warmed-up

– Drive vehicle for 10 minutes.

OPERATION PROCEDURE

With CONSULT-II

1. Perform EC-486, "Accelerator Pedal Released Position Learning" .
2. Perform EC-486, "Throttle Valve Closed Position Learning" .
3. Start engine and warm it up to normal operating temperature.
4. Check that all items listed under the topic PREPARATION (previously mentioned) are in good order.
5. Select “IDLE AIR VOL LEARN” in “WORK SUPPORT” mode.

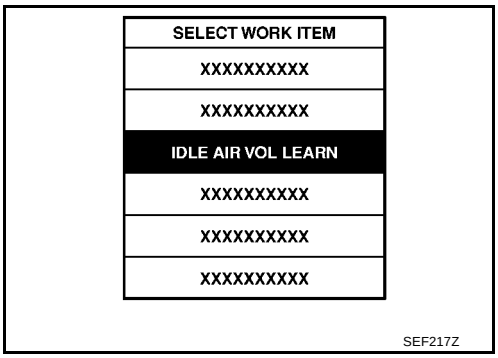

6. Touch “START” and wait 20 seconds.

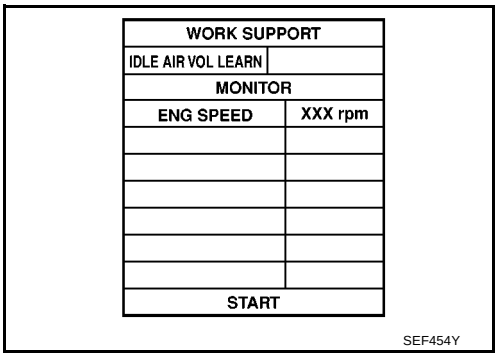

7. Make sure that “CMPLT” is displayed on CONSULT-II screen. If “CMPLT” is not displayed, Idle Air Volume Learning will not be carried out successfully. In this case, find the cause of the incident by referring to the Diagnostic Procedure below.
8. Rev up the engine two or three times and make sure that idle speed is within the specifications.

ITEM	SPECIFICATION
Idle speed	650 ± 50 rpm (in Neutral position)

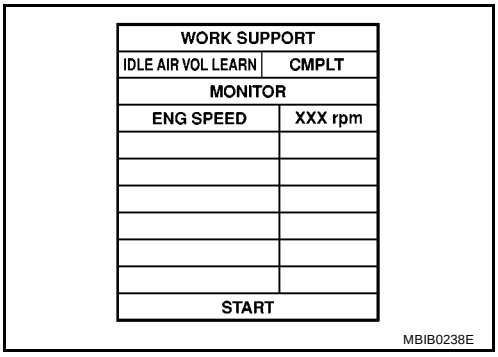

Without CONSULT-II

NOTE:

- **It is better to count the time accurately with a clock.**
- **It is impossible to switch the diagnostic mode when an accelerator pedal position sensor circuit has a malfunction.**

1. Perform EC-486, "Accelerator Pedal Released Position Learning" .
2. Perform EC-486, "Throttle Valve Closed Position Learning" .

3. Start engine and warm it up to normal operating temperature.
4. Check that all items listed under the topic PREPARATION (previously mentioned) are in good order.
5. Turn ignition switch OFF and wait at least 10 seconds.
6. Confirm that accelerator pedal is fully released, turn ignition switch ON and wait 3 seconds.
7. Repeat the following procedure quickly five times within 5 seconds.

a. Fully depress the accelerator pedal.
b. Fully release the accelerator pedal.

8. Wait 7 seconds, fully depress the accelerator pedal and keep it for approx. 20 seconds until the MI stops blinking and turned ON.
9. Fully release the accelerator pedal within 3 seconds after the MI turned ON.
10. Start engine and let it idle.
11. Wait 20 seconds.

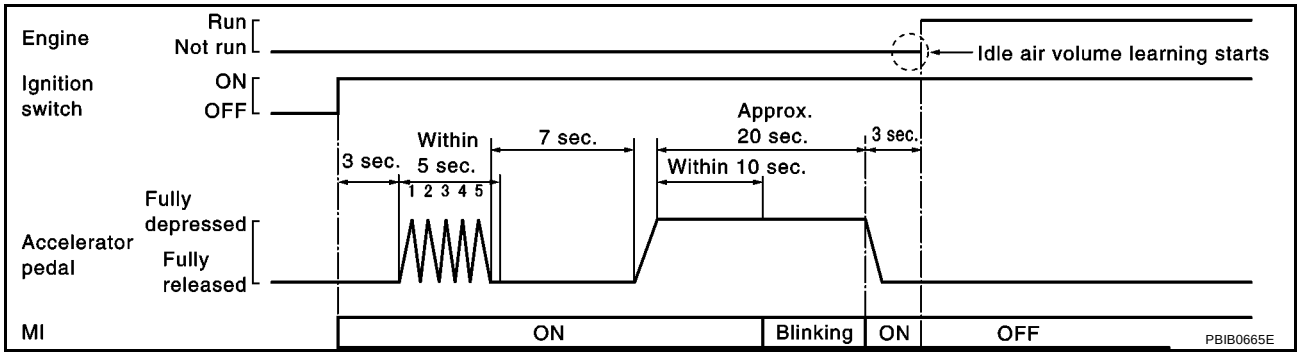

12. Rev up the engine two or three times and make sure that idle speed is within the specifications.

ITEM	SPECIFICATION
Idle speed	650 ± 50 rpm (in Neutral position)

13. If idle speed is not within the specification, Idle Air Volume Learning will not be carried out successfully. In this case, find the cause of the incident by referring to the Diagnostic Procedure below.

DIAGNOSTIC PROCEDURE

If idle air volume learning cannot be performed successfully, proceed as follows:

1. **Check that throttle valve is fully closed.**
2. **Check PCV valve operation.**
3. **Check that downstream of throttle valve is free from air leakage.**
4. **When the above three items check out OK, engine component parts and their installation condition are questionable. Check and eliminate the cause of the incident.**
   It is useful to perform **EC-532, "TROUBLE DIAGNOSIS - SPECIFICATION VALUE"** **.**
5. **If any of the following conditions occur after the engine has started, eliminate the cause of the incident and perform Idle Air Volume Learning all over again:**
   - **Engine stalls.**
   - **Erroneous idle.**

Fuel Pressure Check

BBS00355

FUEL PRESSURE RELEASE

With CONSULT-II

1. Turn ignition switch ON.

2. Perform “FUEL PRESSURE RELEASE” in “WORK SUPPORT” mode with CONSULT-II.
3. Start engine.
4. After engine stalls, crank it two or three times to release all fuel pressure.
5. Turn ignition switch OFF.

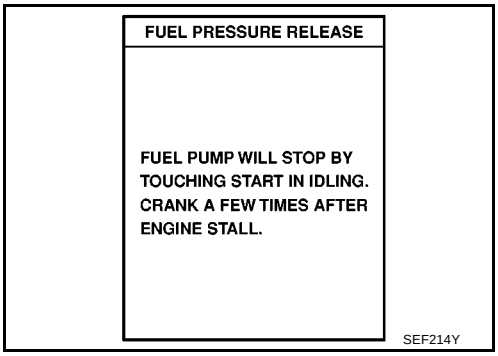

Without CONSULT-II

1. Remove fuel pump fuse located in IPDM E/R.
2. Start engine.
3. After engine stalls, crank it two or three times to release all fuel pressure.
4. Turn ignition switch OFF.
5. Reinstall fuel pump fuse after servicing fuel system.

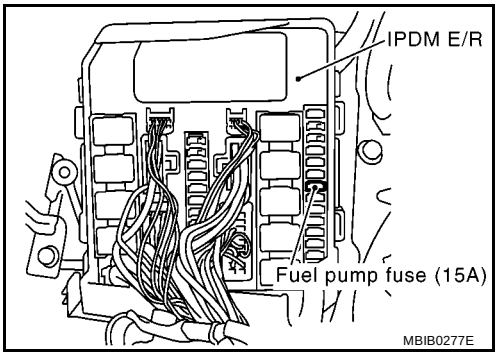

FUEL PRESSURE CHECK

CAUTION:

- **Before disconnecting fuel line, release fuel pressure from fuel line to eliminate danger.**
- **The fuel hose connection method used when taking fuel pressure check must not be used for other purposes.**
- **Be careful not to scratch or put debris around connection area when servicing, so that the quick connector maintains sealability with O-rings inside.**
- **When installing fuel hose quick connector, refer to EM-18, "AIR CLEANER AND AIR DUCT" .**

NOTE:
Prepare pans or saucers under the disconnected fuel line because the fuel may spill out. The fuel pressure cannot be completely released because E11 models do not have fuel return system.

1. Release fuel pressure to zero. Refer to EC-488, "FUEL PRESSURE RELEASE" .
2. Prepare fuel hose and fuel hose clamp for fuel pressure check, and connect fuel pressure gauge.
   - Use suitable fuel hose for fuel pressure check (genuine NISSAN fuel hose without quick connector).
   - To avoid unnecessary force or tension to hose, use moderately long fuel hose for fuel pressure check.
   - Do not use the fuel hose for checking fuel pressure with damage or cracks on it.
   - Use Pressure Gauge to check fuel pressure.
3. Remove fuel hose. Refer to EM-18, "AIR CLEANER AND AIR DUCT" .
   - Do not twist or kink fuel hose because it is plastic hose.
   - Do not remove fuel hose from quick connector.
   - Keep the original fuel hose to be free from intrusion of dust or foreign substances with a suitable cover.

4. Install the fuel pressure gauge as shown in the figure.
   - Wipe off oil or dirt from hose insertion part using cloth moistened with gasoline.
   - Apply proper amount of gasoline between top of the fuel tube and No.1 spool.
   - Insert fuel hose for fuel pressure check until it touches the No.1 spool on fuel tube.
   - Use NISSAN genuine hose clamp (part number: 16439 N4710 or 16439 40U00).
   - When reconnecting fuel line, always use new clamps.
   - When reconnecting fuel hose, check the original fuel hose for damage and abnormality.
   - Use a torque driver to tighten clamps.
   - Install hose clamp to the position within 1 - 2 mm (0.04 - 0.08 in).
   - A: Fuel pressure gauge

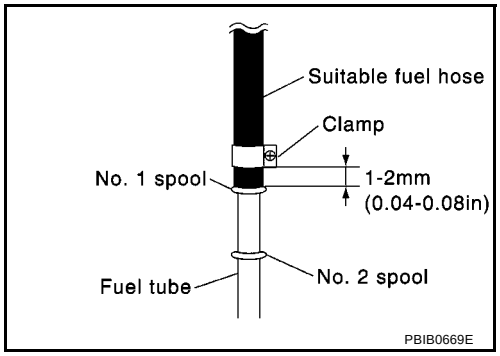

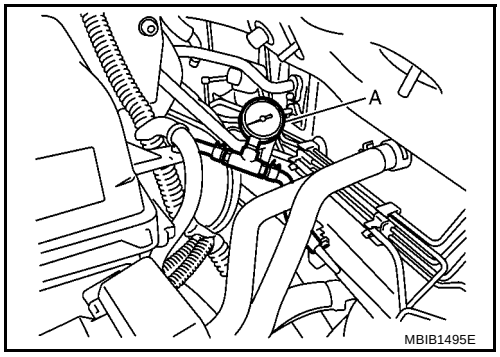

Tightening torque: 1 - 1.5 N·m (0.1 - 0.15 kg-m, 9 - 13 in-lb)

   - Make sure that clamp screw does not contact adjacent parts.
5. After connecting fuel hose for fuel pressure check, pull the hose with a force of approximately 98 N (10 kg, 22 lb) to confirm fuel tube does not come off.
6. Turn ignition switch ON, and check for fuel leakage.
7. Start engine and check for fuel leakage.
8. Read the indication of fuel pressure gauge.
   - Do not perform fuel pressure check with system operating. Fuel pressure gauge may indicate false readings.
   - During fuel pressure check, confirm for fuel leakage from fuel connection every 3 minutes.

At idling: Approximately 350 kPa (3.5 bar, 3.57 kg/cm^2 , 51 psi)

9. If result is unsatisfactory, go to next step.
10. Check the following.
    - Fuel hoses and fuel tubes for clogging
    - Fuel filter for clogging
    - Fuel pump
    - Fuel pressure regulator for clogging

    If OK, replace fuel pressure regulator.
    If NG, repair or replace.

TROUBLE DIAGNOSIS

PFP:00004

Trouble Diagnosis Introduction

BBS0035B

INTRODUCTION

The engine has an ECM to control major systems such as fuel control, ignition control, idle air control system, etc. The ECM accepts input signals from sensors and instantly drives actuators. It is essential that both input and output signals are proper and stable. At the same time, it is important that there are no malfunctions such as vacuum leaks, fouled spark plugs, or other malfunctions with the engine.

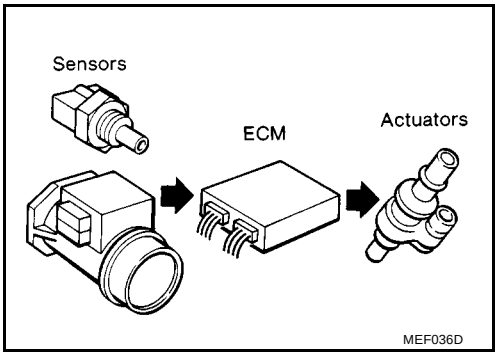

It is much more difficult to diagnose an incident that occurs intermittently rather than continuously. Most intermittent incidents are caused by poor electric connections or improper wiring. In this case, careful checking of suspected circuits may help prevent the replacement of good parts.

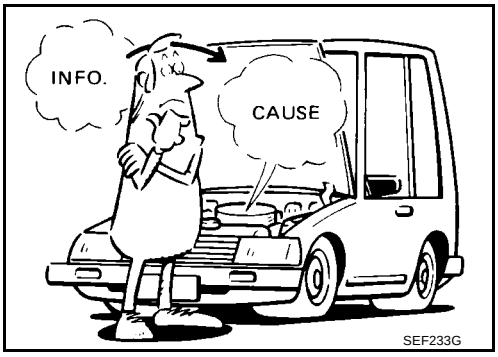

A visual check only may not find the cause of the incidents. A road test with CONSULT-II or a circuit tester connected should be performed. Follow the Work Flow on EC-492 .

Before undertaking actual checks, take a few minutes to talk with a customer who approaches with a driveability complaint. The customer can supply good information about such incidents, especially intermittent ones. Find out what symptoms are present and under what conditions they occur. A Diagnostic Worksheet like the example on EC-496 should be used.

Start your diagnosis by looking for conventional malfunctions first. This will help troubleshoot driveability malfunctions on an electronically controlled engine vehicle.

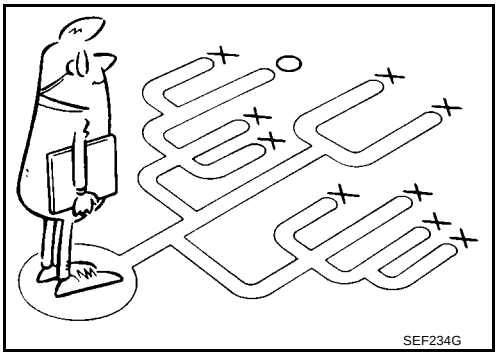

WORK FLOW
Overall Sequence

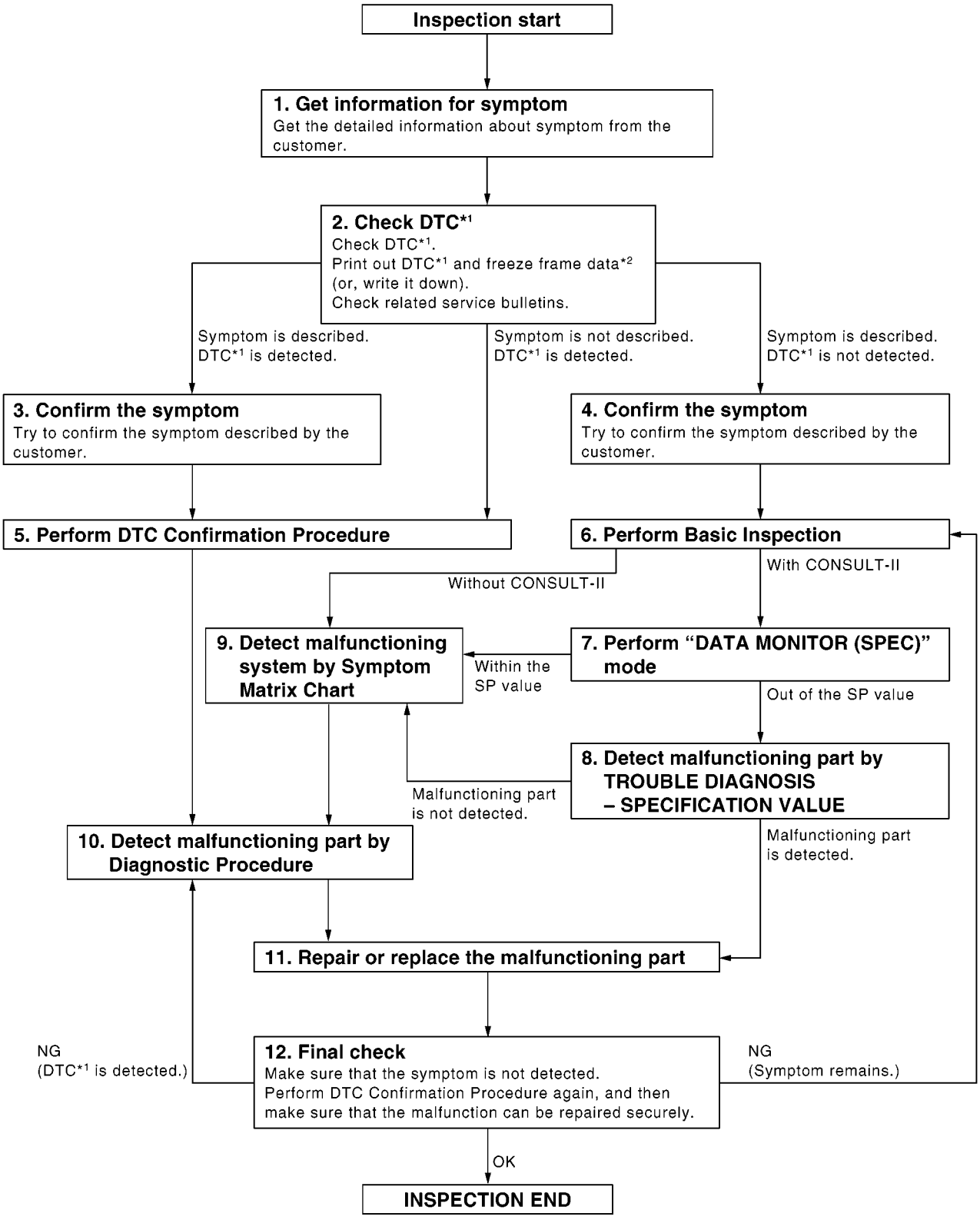

*1: Include 1st trip DTC.
*2: Include 1st trip freeze frame data.

PBIB2267E

Detailed Flow

1. GET INFORMATION FOR SYMPTOM

Get the detailed information from the customer about the symptom (the condition and the environment when the incident/malfunction occurred) using the EC-495, "DIAGNOSTIC WORKSHEET" .

>> GO TO 2.

2. CHECK DTC*1

1. Check DTC*1 .
2. Perform the following procedure if DTC*1 is displayed.

- Record DTC*1 and freeze frame data*2 . (Print them out with CONSULT-II.)
- Erase DTC*1 . (Refer to EC-478, "HOW TO ERASE EMISSION-RELATED DIAGNOSTIC INFORMATION" .)
- Study the relationship between the cause detected by DTC*1 and the symptom described by the customer. (Symptom Matrix Chart is useful. Refer to EC-499, "Symptom Matrix Chart" .)

3. Check related service bulletins for information.

Is any symptom described and any DTC detected?

Symptom is described, DTC*1 is displayed>>GO TO 3.
Symptom is described, DTC*1 is not displayed>>GO TO 4.
Symptom is not described, DTC*1 is displayed>>GO TO 5.

3. CONFIRM THE SYMPTOM

Try to confirm the symptom described by the customer (except MI ON).
DIAGNOSIS WORK SHEET is useful to verify the incident.
Connect CONSULT-II to the vehicle in “DATA MONITOR (AUTO TRIG)” mode and check real time diagnosis results.
Verify relation between the symptom and the condition when the symptom is detected.

>> GO TO 5.

4. CONFIRM THE SYMPTOM

Try to confirm the symptom described by the customer.
DIAGNOSIS WORK SHEET is useful to verify the incident.
Connect CONSULT-II to the vehicle in “DATA MONITOR (AUTO TRIG)” mode and check real time diagnosis results.
Verify relation between the symptom and the condition when the symptom is detected.

>> GO TO 6.

5. PERFORM DTC CONFIRMATION PROCEDURE

Perform DTC Confirmation Procedure for the displayed DTC*1 , and then make sure that DTC*1 is detected again.
At this time, always connect CONSULT-II to the vehicle, and check diagnostic results in real time on “DATA MONITOR (AUTO TRIG)”.
If two or more DTCs*1 are detected, refer to EC-497, "DTC Inspection Priority Chart" and determine trouble diagnosis order.

NOTE:

- Freeze frame data*2 is useful if the DTC*1 is not detected.
- Perform Overall Function Check if DTC Confirmation Procedure is not included on Service Manual. This simplified check procedure is an effective alternative though DTC*1 cannot be detected during this check. If the result of Overall Function Check is NG, it is the same as the detection of DTC*1 by DTC Confirmation Procedure.

Is DTC*1 detected?

Yes >> GO TO 10.
No >> Check according to EC-542, "TROUBLE DIAGNOSIS FOR INTERMITTENT INCIDENT" .

6. PERFORM BASIC INSPECTION

Perform EC-483, "Basic Inspection" .

With CONSULT-II>>GO TO 7.
Without CONSULT-II>>GO TO 9.

7. PERFORM DATA MONITOR (SPEC) MODE

With CONSULT-II
Make sure that “B/FUEL SCHDL”, and “A/F ALPHA-B1” are within the SP value using CONSULT-II “DATA MONITOR (SPEC)” mode. Refer to EC-533, "Diagnostic Procedure" .

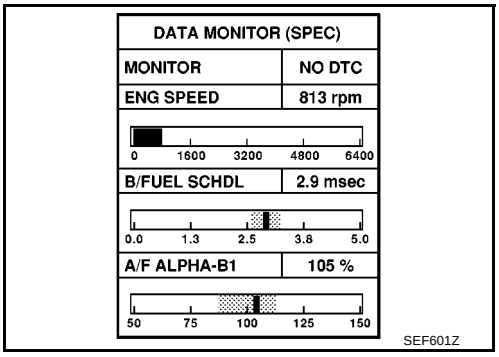

Are they within the SP value?

Yes >> GO TO 9.
No >> GO TO 8.

8. DETECT MALFUNCTIONING PART BY TROUBLE DIAGNOSIS - SPECIFICATION VALUE

Detect malfunctioning part according to EC-532, "TROUBLE DIAGNOSIS - SPECIFICATION VALUE" .

Is malfunctioning part detected?

Yes >> GO TO 11.
No >> GO TO 9.

9. DETECT MALFUNCTIONING SYSTEM BY SYMPTOM MATRIX CHART

Detect malfunctioning system according to EC-499, "Symptom Matrix Chart" based on the confirmed symptom in step 4, and determine the trouble diagnosis order based on possible causes and symptom.

>> GO TO 10.

10. DETECT MALFUNCTIONING PART BY DIAGNOSTIC PROCEDURE

Inspect according to Diagnostic Procedure of the system.

NOTE:
The Diagnostic Procedure in EC section described based on open circuit inspection. A short circuit inspection is also required for the circuit check in the Diagnostic Procedure. For details, refer to Circuit Inspection in GI-25, "How to Perform Efficient Diagnosis for an Electrical Incident" .

Is malfunctioning part detected?

Yes >> GO TO 11.
No >> Monitor input data from related sensors or check voltage of related ECM terminals using CONSULT-II. Refer to EC-512, "ECM Terminals and Reference Value" , EC-527, "CONSULT-II Reference Value in Data Monitor Mode" .

11. REPAIR OR REPLACE THE MALFUNCTIONING PART

1. Repair or replace the malfunctioning part.
2. Reconnect parts or connectors disconnected during Diagnostic Procedure again after repair and replacement.
3. Check DTC. If DTC is displayed, erase it, refer to EC-478, "HOW TO ERASE EMISSION-RELATED DIAGNOSTIC INFORMATION" .

>> GO TO 12.

12. FINAL CHECK

When DTC was detected in step 2, perform DTC Confirmation Procedure or Overall Function Check again, and then make sure that the malfunction have been repaired securely.
When symptom was described from the customer, refer to confirmed symptom in step 3 or 4, and make sure that the symptom is not detected.

OK or NG

NG (DTC*1 is detected)>>GO TO 10.
NG (Symptom remains)>>GO TO 6.
OK >> 1. Before returning the vehicle to the customer, make sure to erase unnecessary DTC*1 in ECM. (Refer to EC-478, "HOW TO ERASE EMISSION-RELATED DIAGNOSTIC INFORMATION" .)
2. **INSPECTION END**

*1: Include 1st trip DTC.
*2: Include 1st trip freeze frame data.

DIAGNOSTIC WORKSHEET

Description

There are many operating conditions that lead to the malfunction of engine components. A good grasp of such conditions can make troubleshooting faster and more accurate.
In general, each customer feels differently about an incident. It is important to fully understand the symptoms or conditions for a customer complaint.
Utilize a diagnostic worksheet like the one on the next page in order to organize all the information for troubleshooting.

KEY POINTS

WHAT ..... Vehicle & engine model
WHEN ..... Date, Frequencies
WHERE..... Road conditions
HOW ..... Operating conditions, Weather conditions, Symptoms

SEF907L

Worksheet Sample

Customer name MR/MS		Model & Year	VIN
Engine #		Trans.	Mileage
Incident Date		Manuf. Date	In Service Date
Fuel and fuel filler cap		☐ Vehicle ran out of fuel causing misfire ☐ Fuel filler cap was left off or incorrectly screwed on.	
Symptoms	☐ Startability	☐ Impossible to start ☐ No combustion ☐ Partial combustion ☐ Partial combustion affected by throttle position ☐ Partial combustion NOT affected by throttle position ☐ Possible but hard to start ☐ Others [ ]	
	☐ Idling	☐ No fast idle ☐ Unstable ☐ High idle ☐ Low idle ☐ Others [ ]	
	☐ Driveability	☐ Stumble ☐ Surge ☐ Knock ☐ Lack of power ☐ Intake backfire ☐ Exhaust backfire ☐ Others [ ]	
	☐ Engine stall	☐ At the time of start ☐ While idling ☐ While accelerating ☐ While decelerating ☐ Just after stopping ☐ While loading	
Incident occurrence		☐ Just after delivery ☐ Recently ☐ In the morning ☐ At night ☐ In the daytime	
Frequency		☐ All the time ☐ Under certain conditions ☐ Sometimes	
Weather conditions		☐ Not affected	
	Weather	☐ Fine ☐ Raining ☐ Snowing ☐ Others [ ]	
	Temperature	☐ Hot ☐ Warm ☐ Cool ☐ Cold ☐ Humid °F	
Engine conditions		☐ Cold ☐ During warm-up ☐ After warm-up Engine speed 0 2,000 4,000 6,000 8,000 rpm	
Road conditions		☐ In town ☐ In suburbs ☐ Highway ☐ Off road (up/down)	
Driving conditions		☐ Not affected ☐ At starting ☐ While idling ☐ At racing ☐ While accelerating ☐ While cruising ☐ While decelerating ☐ While turning (RH/LH) Vehicle speed 0 10 20 30 40 50 60 MPH	
Malfunction indicator lamp		☐ Turned on ☐ Not turned on	

MTBL0017

DTC Inspection Priority Chart

BBS0035C

If some DTCs are displayed at the same time, perform inspections one by one based on the following priority chart.

NOTE:

- **If DTC U1001 is displayed with other DTC, first perform the trouble diagnosis for DTC U1001. Refer to EC-549, "DTC U1001 CAN COMMUNICATION LINE" .**
- **If DTC U1010 is displayed with other DTC, first perform the trouble diagnosis for DTC U1010. Refer to EC-552, "DTC U1010 CAN COMMUNICATION" .**

Priority	Detected items (DTC)
1	● U1001 CAN communication line ● U1010 CAN communication ● P0107 P0108 Manifold absolute pressure sensor ● P0117 P0118 Engine coolant temperature sensor ● P0122 P0123 P0222 P0223 P1225 P1226 P2135 Throttle position sensor ● P0327 P0328 Knock sensor ● P0335 Crankshaft position sensor (POS) ● P0340 Camshaft position sensor (PHASE) ● P0605 ECM ● P1171 Intake error ● P1229 Sensor power supply ● P1610-P1615 NATS ● P1706 Park/Neutral position (PNP) switch ● P2122 P2123 P2127 P2128 P2138 Accelerator pedal position sensor
2	● P0132 P0134 Heated oxygen sensor 1 ● P0138 Heated oxygen sensor 2 ● P1065 ECM power supply ● P1111 Intake valve timing control solenoid valve ● P1122 Electric throttle control function ● P1124 P1126 Throttle control motor relay ● P1128 Throttle control mother ● P1805 Brake switch
3	● P0011 Intake valve timing control ● P1121 Electric throttle control actuator ● P1211 ESP control unit ● P1212 ESP communication line ● P1217 Engine over temperature (OVERHEAT)

Fail-Safe Chart

BBS0035D

When the DTC listed bellow is detected, the ECM enters fail-safe mode and the MI lights up.

DTC No.	Detected items	Engine operating condition in fail-safe mode
P0122 P0123 P0222 P0223 P2135	Throttle position sensor	The ECM controls the electric throttle control actuator in regulating the throttle opening in order for the idle position to be within +10 degrees. The ECM regulates the opening speed of the throttle valve to be slower than the normal condition. So, the acceleration will be poor.
P1121	Electric throttle control actuator	(When electric throttle control actuator does not function properly due to the return spring malfunction:) ECM controls the electric throttle control actuator by regulating the throttle opening around the idle position. The engine speed will not rise more than 2,000 rpm.
		(When throttle valve opening angle in fail-safe mode is not in specified range:) ECM controls the electric throttle control actuator by regulating the throttle opening to 20 degrees or less.
		(When ECM detects the throttle valve is stuck open:) While the vehicle is driving, it slows down gradually by fuel cut. After the vehicle stops, the engine stalls. The engine can restart in Neutral position and engine speed will not exceed 1,000 rpm or more.
P1122	Electric throttle control function	ECM stops the electric throttle control actuator control, throttle valve is maintained at a fixed opening (approx. 5 degrees) by the return spring.
P1124 P1126	Throttle control motor relay	ECM stops the electric throttle control actuator control, throttle valve is maintained at a fixed opening (approx. 5 degrees) by the return spring.
P1128	Throttle control motor	ECM stops the electric throttle control actuator control, throttle valve is maintained at a fixed opening (approx. 5 degrees) by the return spring.
P1171	Intake air system	When accelerator pedal is depressed, engine speed will not rise more than 2,500 rpm due to fuel cut.
P1229	Sensor power supply	ECM stops the electric throttle control actuator control, throttle valve is maintained at a fixed opening (approx. 5 degrees) by the return spring.
P1805	Brake switch	ECM controls the electric throttle control actuator by regulating the throttle opening to a small range. Therefore, acceleration will be poor.
		Vehicle condition: Driving condition
		When engine is idling: Normal
		When accelerating: Poor acceleration
P2122 P2123 P2127 P2128 P2138	Accelerator pedal position sensor	The ECM controls the electric throttle control actuator in regulating the throttle opening in order for the idle position to be within +10 degrees. The ECM regulates the opening speed of the throttle valve to be slower than the normal condition. So, the acceleration will be poor.

- When there is an open circuit on MI circuit, the ECM can not warn the driver by lighting up MI when there is a malfunction on engine control system.
  Therefore, when electrical controlled throttle and part of ECM related diagnoses is continuously detected as NG for 5 trips, ECM warns the driver that engine control system has a malfunction and MI circuit is open by means of operating fail-safe function.
  The fail-safe function also operate when above diagnoses except MI circuit are detected and demands the driver to repair the malfunction.

Engine operating condition in fail-safe mode	Engine speed will not rise more than 2,500 rpm due to the fuel cut

Symptom Matrix Chart

BBS0035F

SYSTEM — BASIC ENGINE CONTROL SYSTEM

		SYMPTOM													Reference page
		HARD/NO START/RESTART (EXCP. HA)	ENGINE STALL	HESITATION/SURGING/FLAT SPOT	SPARK KNOCK/DETONATION	LACK OF POWER/POOR ACCELERATION	HIGH IDLE/LOW IDLE	ROUGH IDLE/HUNTING	IDLING VIBRATION	SLOW/NO RETURN TO IDLE	OVERHEATS/WATER TEMPERATURE HIGH	EXCESSIVE FUEL CONSUMPTION	EXCESSIVE OIL CONSUMPTION	BATTERY DEAD (UNDER CHARGE)	
Warranty symptom code		AA	AB	AC	AD	AE	AF	AG	AH	AJ	AK	AL	AM	HA	
Fuel	Fuel pump circuit	1	1	2	3	2		2	2			3		2	EC-750
	Fuel pressure regulator system	3	3	4	4	4	4	4	4	4		4			EC-488
	Fuel injector circuit	1	1	2	3	2		2	2			2			EC-744
	Evaporative emission system	3	3	4	4	4	4	4	4	4		4			EC-469
Air	Positive crankcase ventilation system	3	3	4	4	4	4	4	4	4		4	1		EC-474
	Incorrect idle speed adjustment	3	3				1	1	1	1		1			EC-483
	Electric throttle control actuator	1	1	2	3	3	2	2	2	2		2		2	EC-635, EC-637 , EC-643 , EC-649
Ignition	Incorrect ignition timing adjustment	3	3	1	1	1		1	1			1			EC-483
	Ignition circuit	1	1	2	2	2		2	2			2			EC-784
Main power supply and ground circuit		2	2	3	3	3		3	3		2	3			EC-543
Manifold absolute pressure sensor circuit		1	1	2	2	2		2	2			2			EC-559
Engine coolant temperature sensor circuit		1	1	2	2	2	3	2	2	3	1	2			EC-565
Throttle position sensor circuit			1	2		2	2	2	2	2		2			EC-570, EC-598 , EC-676 , EC-678 , EC-718
Accelerator pedal position sensor circuit				3	2	1	2			2					EC-680, EC-699 , EC-708 , EC-725
Heated oxygen sensor 1 circuit			1	2	3	2		2	2			2			EC-577, EC-584 , EC-756
Knock sensor circuit				2	2							3			EC-605
Crankshaft position sensor (POS) circuit		2	2												EC-609
Camshaft position sensor (PHASE) circuit		2	2												EC-616
Vehicle speed signal circuit			2	3		3						3			EC-799
ECM		2	2	3	3	3	3	3	3	3	3	3			EC-623, EC-626

	SYMPTOM													Reference page
	HARD/NO START/RESTART (EXCP. HA)	ENGINE STALL	HESITATION/SURGING/FLAT SPOT	SPARK KNOCK/DETONATION	LACK OF POWER/POOR ACCELERATION	HIGH IDLE/LOW IDLE	ROUGH IDLE/HUNTING	IDLING VIBRATION	SLOW/NO RETURN TO IDLE	OVERHEATS/WATER TEMPERATURE HIGH	EXCESSIVE FUEL CONSUMPTION	EXCESSIVE OIL CONSUMPTION	BATTERY DEAD (UNDER CHARGE)	
Warranty symptom code	AA	AB	AC	AD	AE	AF	AG	AH	AJ	AK	AL	AM	HA	
Intake valve timing control solenoid valve circuit	3	3	2		1	3	2	2	3		3			EC-554
PNP switch circuit			3		3	3	3	3	3		3			EC-688
Refrigerant pressure sensor circuit		2				3	3	3	3		4			EC-794
Electrical load signal circuit						3	3	3	3					EC-735
Air conditioner circuit	2	2	3	3	3	3	3	3	3		3		2	ATC-26 or MTC-23
ABS actuator and electric unit (control unit)			4											BRC-8 or BRC-49

1 - 6: The numbers refer to the order of inspection.
(continued on next page)

SYSTEM — ENGINE MECHANICAL & OTHER

		SYMPTOM													Reference page
		HARD/NO START/RESTART (EXCP. HA)	ENGINE STALL	HESITATION/SURGING/FLAT SPOT	SPARK KNOCK/DETONATION	LACK OF POWER/POOR ACCELERATION	HIGH IDLE/LOW IDLE	ROUGH IDLE/HUNTING	IDLING VIBRATION	SLOW/NO RETURN TO IDLE	OVERHEATS/WATER TEMPERATURE HIGH	EXCESSIVE FUEL CONSUMPTION	EXCESSIVE OIL CONSUMPTION	BATTERY DEAD (UNDER CHARGE)	
Warranty symptom code		AA	AB	AC	AD	AE	AF	AG	AH	AJ	AK	AL	AM	HA	
Fuel	Fuel tank	5	5												FL-8
	Fuel piping			5	5	5		5	5			5			FL-3, EM-32
	Vapor lock														—
	Valve deposit	5		5	5	5		5	5			5			—
	Poor fuel (Heavy weight gasoline, Low octane)														—

		SYMPTOM													Reference page
		HARD/NO START/RESTART (EXCP. HA)	ENGINE STALL	HESITATION/SURGING/FLAT SPOT	SPARK KNOCK/DETONATION	LACK OF POWER/POOR ACCELERATION	HIGH IDLE/LOW IDLE	ROUGH IDLE/HUNTING	IDLING VIBRATION	SLOW/NO RETURN TO IDLE	OVERHEATS/WATER TEMPERATURE HIGH	EXCESSIVE FUEL CONSUMPTION	EXCESSIVE OIL CONSUMPTION	BATTERY DEAD (UNDER CHARGE)	
Warranty symptom code		AA	AB	AC	AD	AE	AF	AG	AH	AJ	AK	AL	AM	HA	
Air	Air duct		5	5		5		5	5			5			EM-18
	Air cleaner														
	Air leakage from air duct (Manifold absolute pressure sensor —electric throttle control actuator)	5			5		5			5					
	Electric throttle control actuator														
	Air leakage from intake manifold/ Collector/Gasket														EM-22
Cranking	Battery	1	1	1		1		1	1			1		1	SC-5
	Alternator circuit														SC-15
	Starter circuit	3													SC-45
	Signal plate/Flywheel/Drive plate	6													EM-74
	PNP switch	4													AT-293, MT-16
Engine	Cylinder head	5	5	5	5	5		5	5			5			EM-60
	Cylinder head gasket										4		3		
	Cylinder block	6	6	6	6	6		6	6			6	4		EM-74
	Piston														
	Piston ring														
	Connecting rod														
	Bearing														
	Crankshaft														
Valve mechanism	Timing chain	5	5	5	5	5		5	5			5			EM-50
	Camshaft														EM-38
	Intake valve timing control														EM-50
	Intake valve												3		EM-60
	Exhaust valve														
Exhaust	Exhaust manifold/Tube/Muffler/ Gasket	5	5	5	5	5		5	5			5			EM-24, EX-3
	Three way catalyst														

		SYMPTOM													Reference page
		HARD/NO START/RESTART (EXCP. HA)	ENGINE STALL	HESITATION/SURGING/FLAT SPOT	SPARK KNOCK/DETONATION	LACK OF POWER/POOR ACCELERATION	HIGH IDLE/LOW IDLE	ROUGH IDLE/HUNTING	IDLING VIBRATION	SLOW/NO RETURN TO IDLE	OVERHEATS/WATER TEMPERATURE HIGH	EXCESSIVE FUEL CONSUMPTION	EXCESSIVE OIL CONSUMPTION	BATTERY DEAD (UNDER CHARGE)	
Warranty symptom code		AA	AB	AC	AD	AE	AF	AG	AH	AJ	AK	AL	AM	HA	
Lubrica-tion	Oil pan/Oil strainer/Oil pump/Oil filter/Oil gallery	5	5	5	5	5		5	5			5	2		EM-26, LU-9 , LU-10 , LU-5
	Oil level (Low)/Filthy oil														LU-6
Cooling	Radiator/Hose/Radiator filler cap	5	5	5	5	5		5	5		2	5			CO-12
	Thermostat									5					CO-19
	Water pump														CO-17
	Water gallery														CO-7
	Cooling fan									5					CO-12
	Coolant level (low)/Contaminated coolant														CO-8
NATS (Nissan Anti-theft System)		1	1												EC-473 or BL-215

1 - 6: The numbers refer to the order of inspection.

Engine Control Component Parts Location

BBS0035G

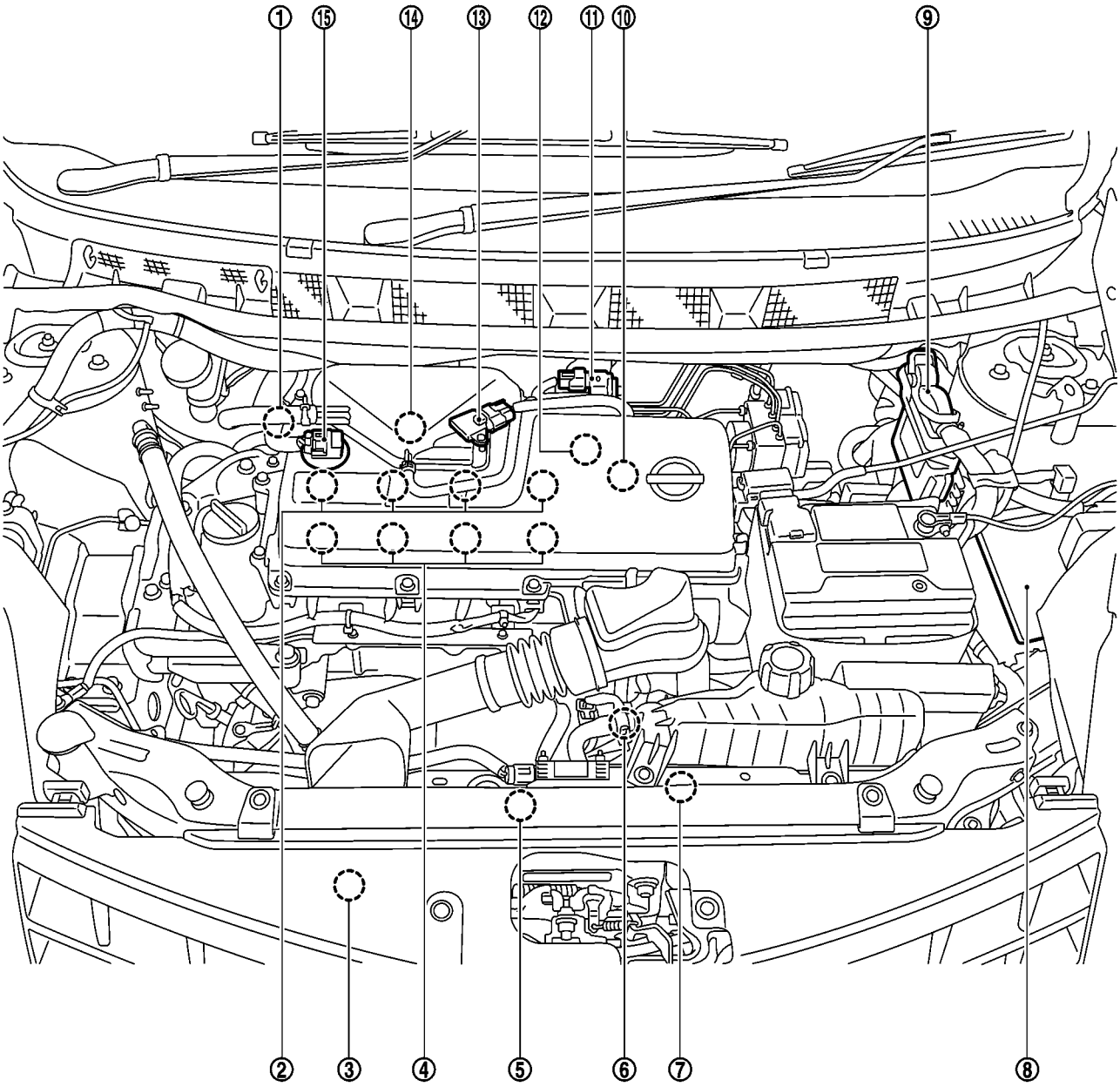

MBIB1491E

1.	Intake valve timing control solenoid valve	2.	Fuel injector	3.	Refrigerant pressure sensor
4.	Ignition coil (with power transistor) and spark plug	5.	Heated oxygen sensor 1	6.	Crankshaft position sensor (POS)
7.	Cooling fan motor	8.	IPDM E/R	9.	ECM
10.	Camshaft position sensor (PHASE)	11.	EVAP canister purge volume control solenoid valve	12.	Engine coolant temperature sensor
13.	Manifold absolute pressure sensor (with intake air temperature sensor)	14.	Knock sensor	15.	Electric throttle control actuator

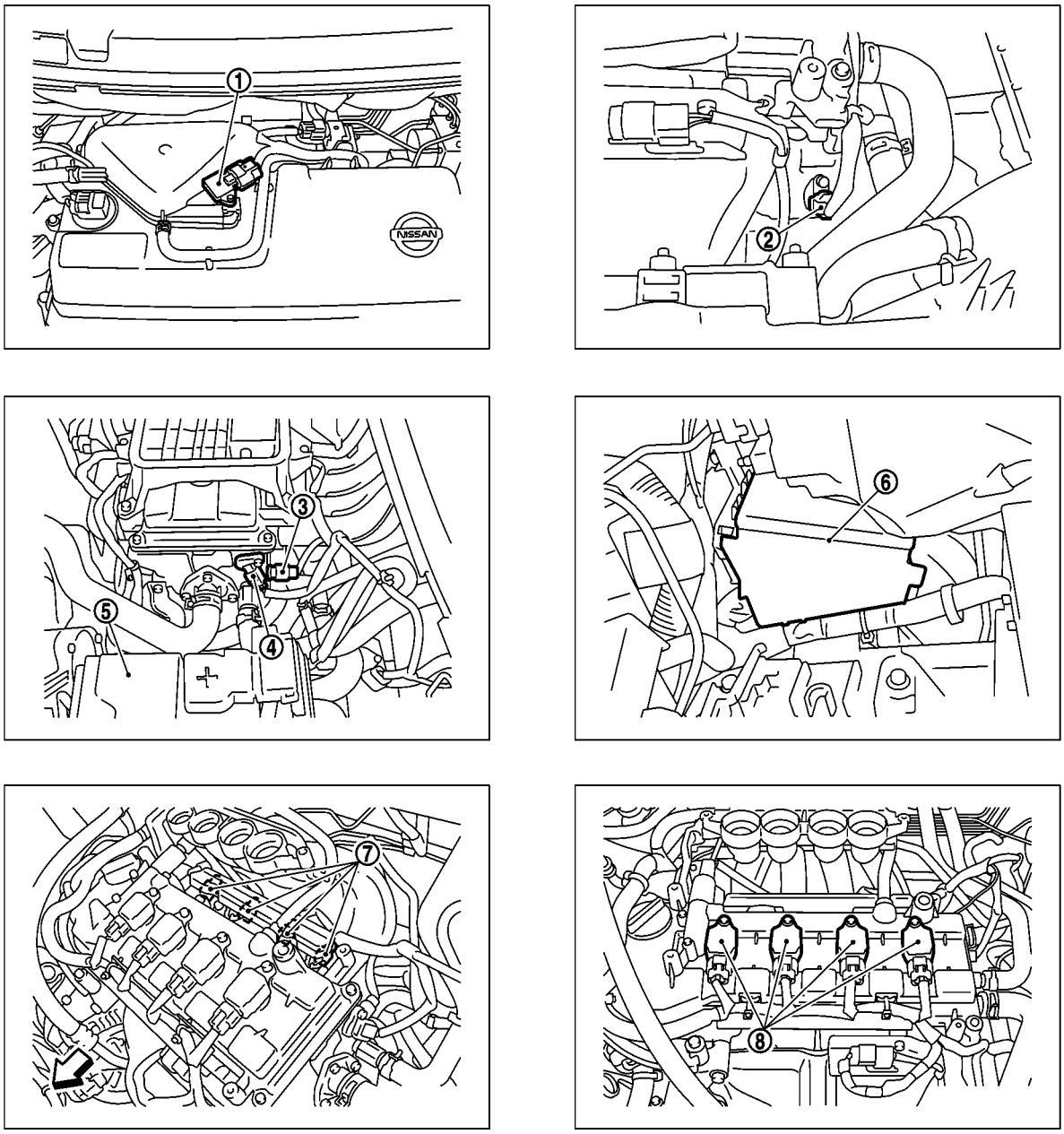

MBIB1498E

⇦ Vehicle front

1. Manifold absolute pressure sensor (with intake air temperature sensor)
2. Crankshaft position sensor (POS)
3. Engine coolant temperature sensor
4. Camshaft position sensor (PHASE)
5. Battery
6. IPDM E/R
7. Fuel injector
8. Ignition coil (with power transistor)

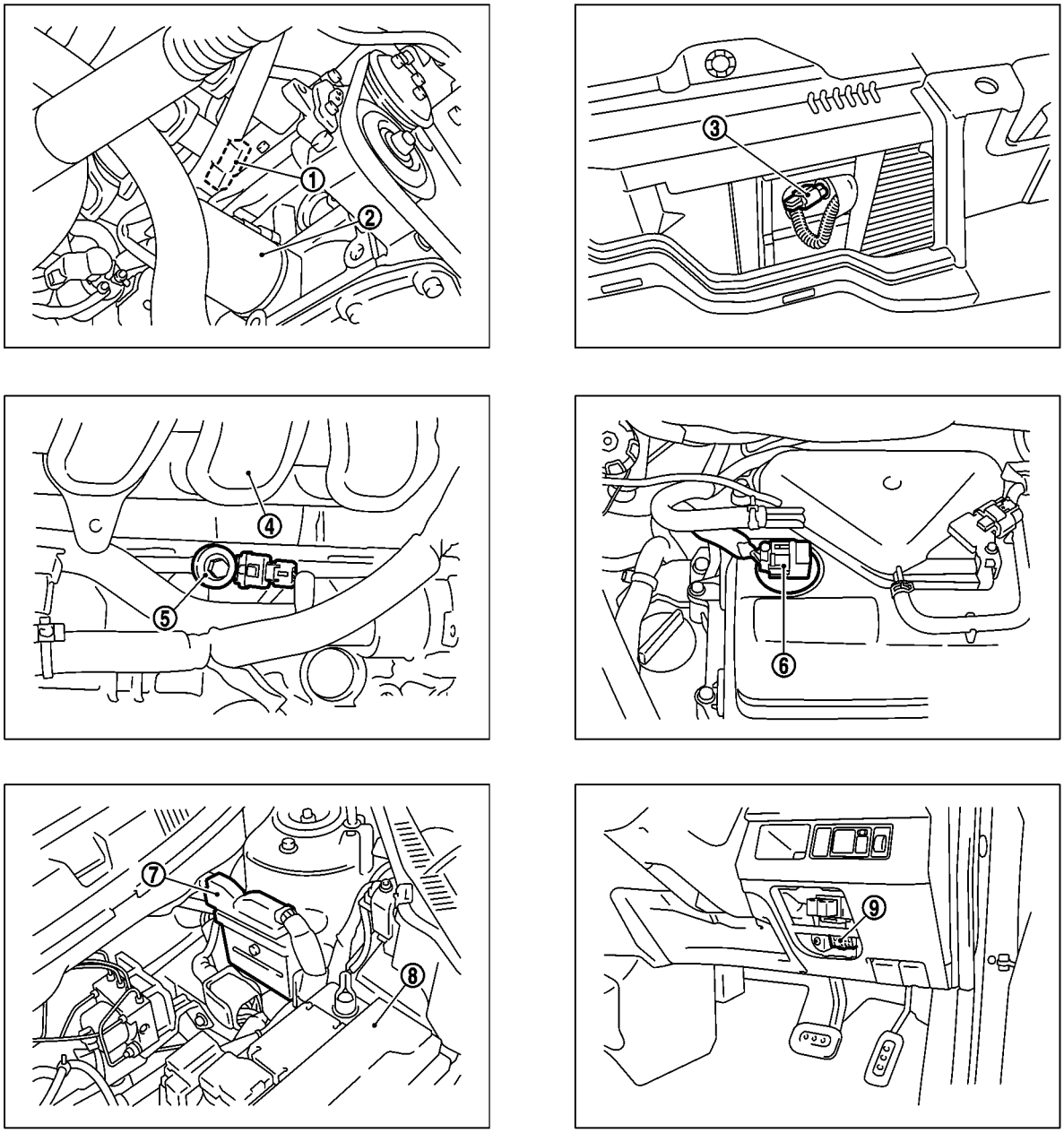

MBIB1499E

1. Condenser
2. Oil filter
3. Refrigerant pressure sensor
4. Intake manifold
5. Knock sensor
6. Electric throttle control actuator
7. ECM
8. Battery
9. Data link connector

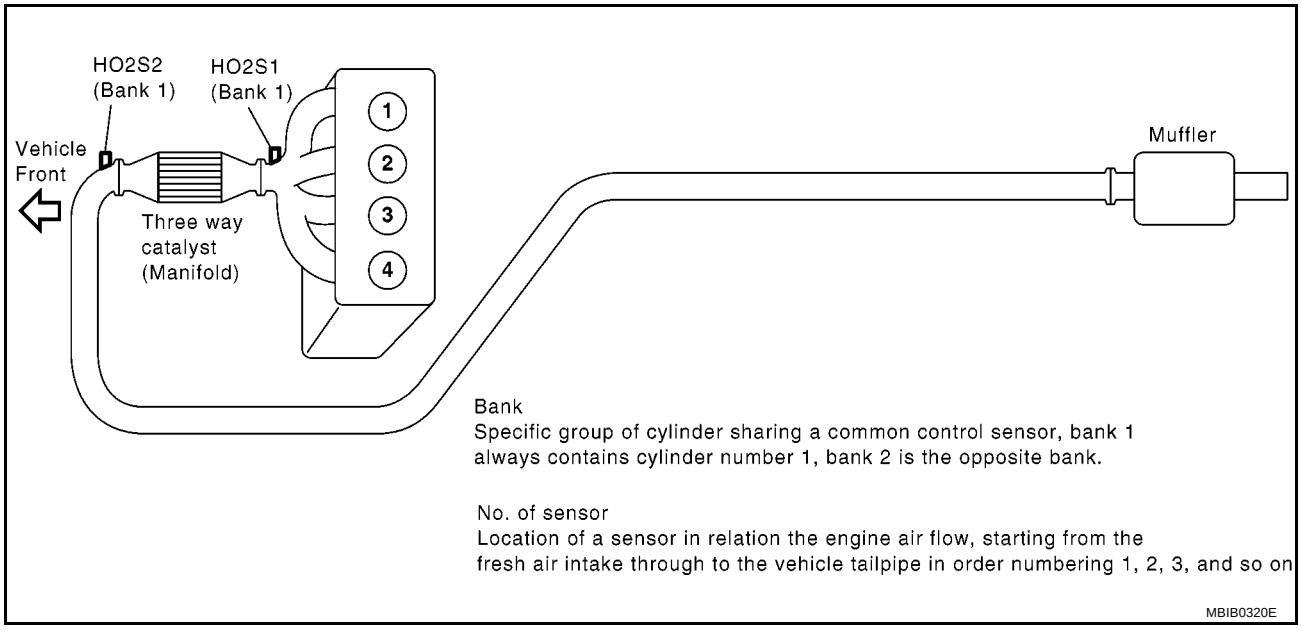

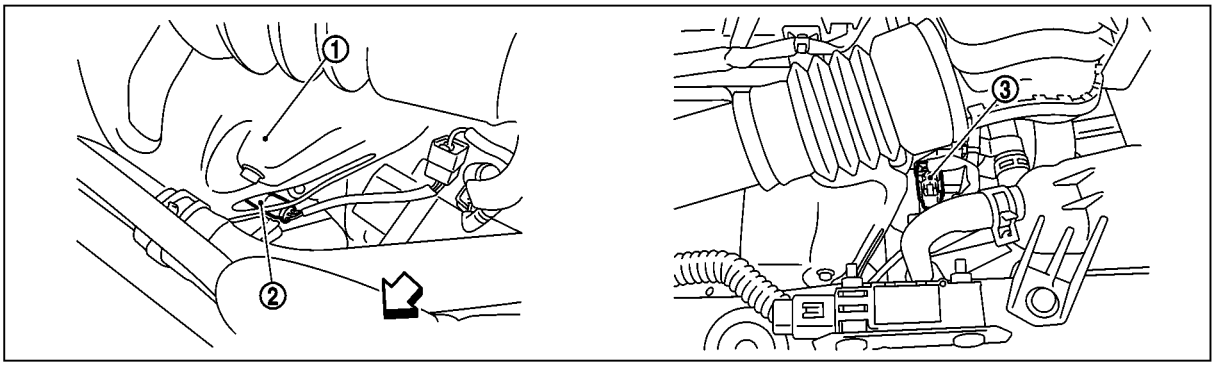

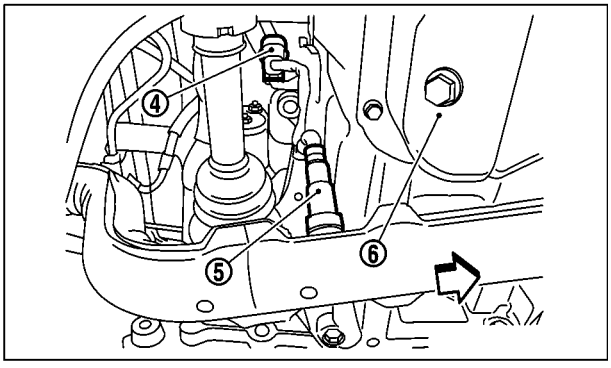

MBIB1460E

⇦ Vehicle front

1. Exhaust manifold cover
2. Heated oxygen sensor 1
3. Heated oxygen sensor 1 harness connector
4. Heated oxygen sensor 2 harness connector
5. Heated oxygen sensor 2
6. Oil pan

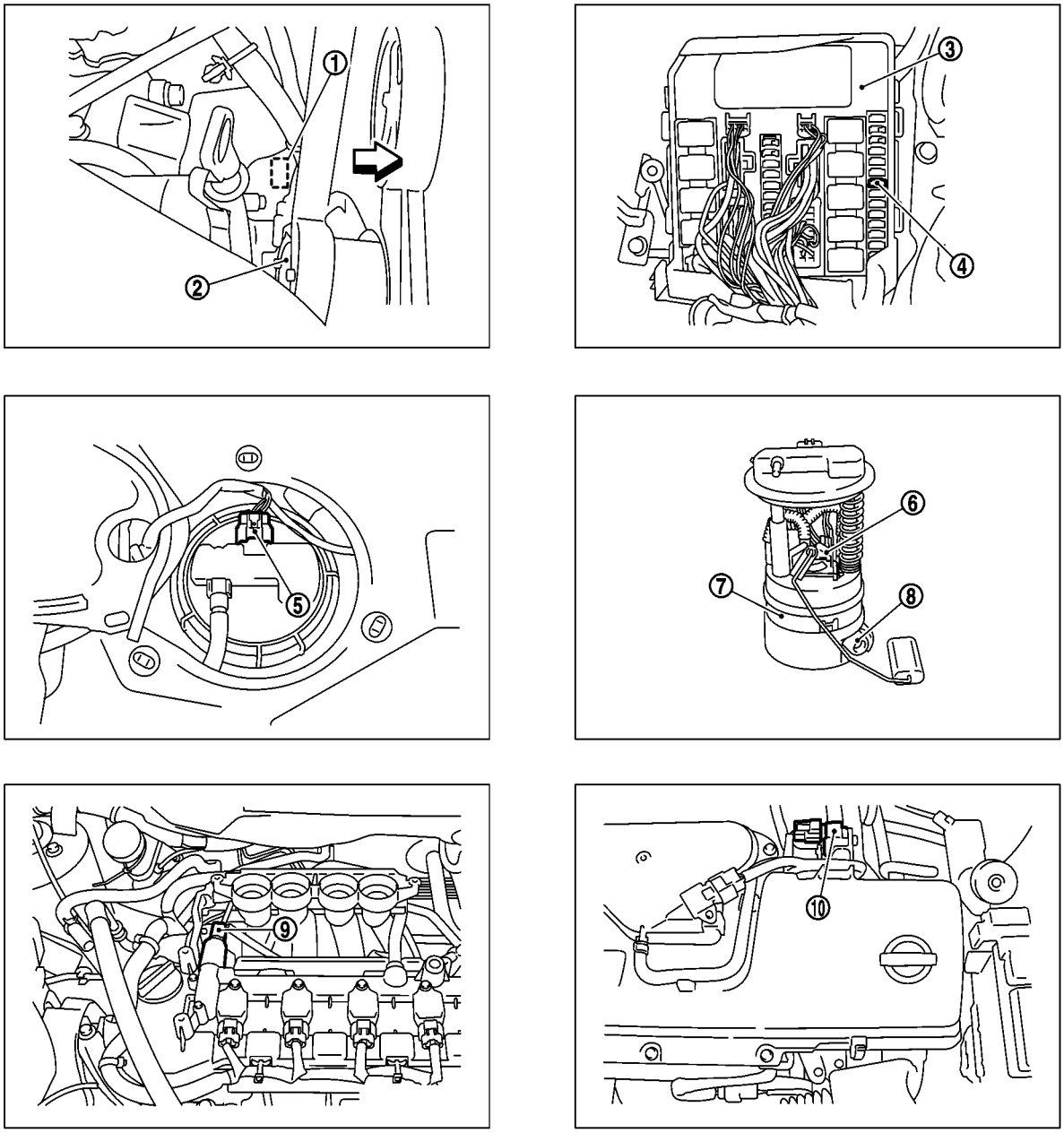

MBIB1500E

⇦ Vehicle front

1. Park/neutral position switch
2. Cooling fan motor
3. IPDM E/R
4. Fuel pump fuse (15A)
5. Fuel level sensor unit and fuel pump harness connector
6. Fuel level sensor unit
7. Fuel pump and fuel filter
8. Fuel pressure regulator
9. Intake valve timing control solenoid valve
10. EVAP canister purge volume control solenoid valve

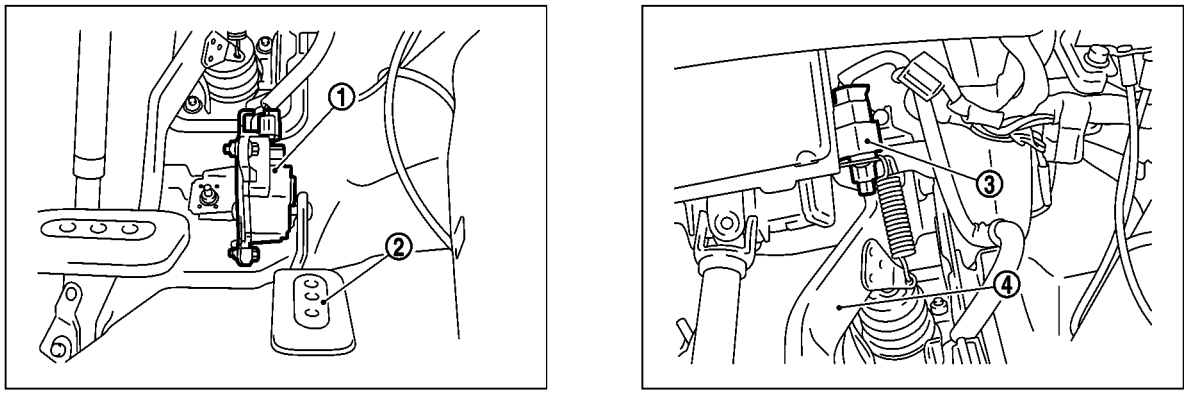

MBIB1501E

1. Accelerator pedal position sensor
2. Accelerator pedal
3. Stop lamp switch
4. Brake pedal

Vacuum Hose Drawing

BBS0034U

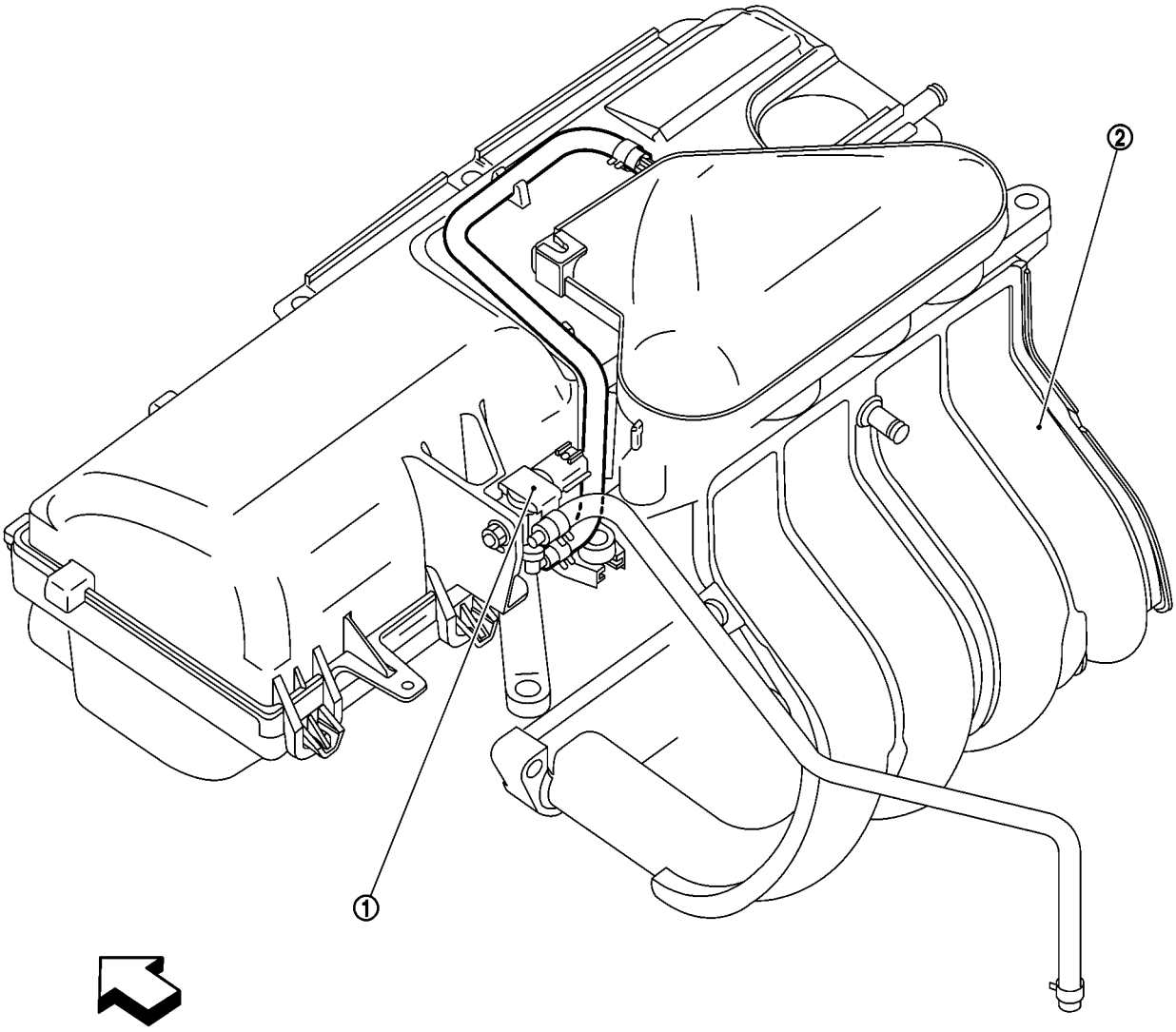

MBIB1440E

⇦ Vehicle front

1. EVAP canister purge volume control solenoid valve
2. Intake manifold

NOTE:
Do not use soapy water or any type of solvent while installing vacuum hose or purge hoses.

Refer to EC-462, "System Diagram" for Vacuum Control System.

Circuit Diagram

BBS0035H

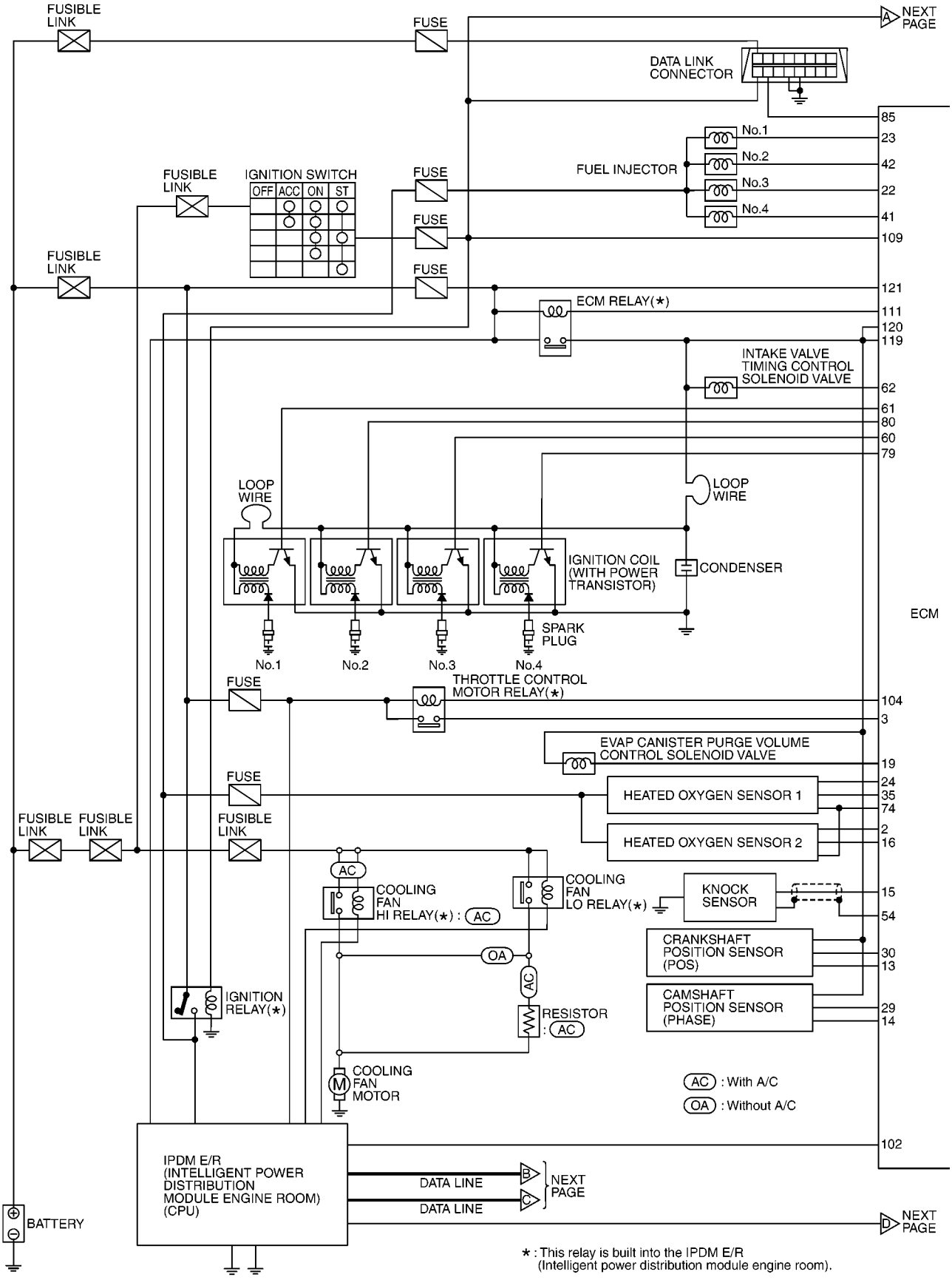

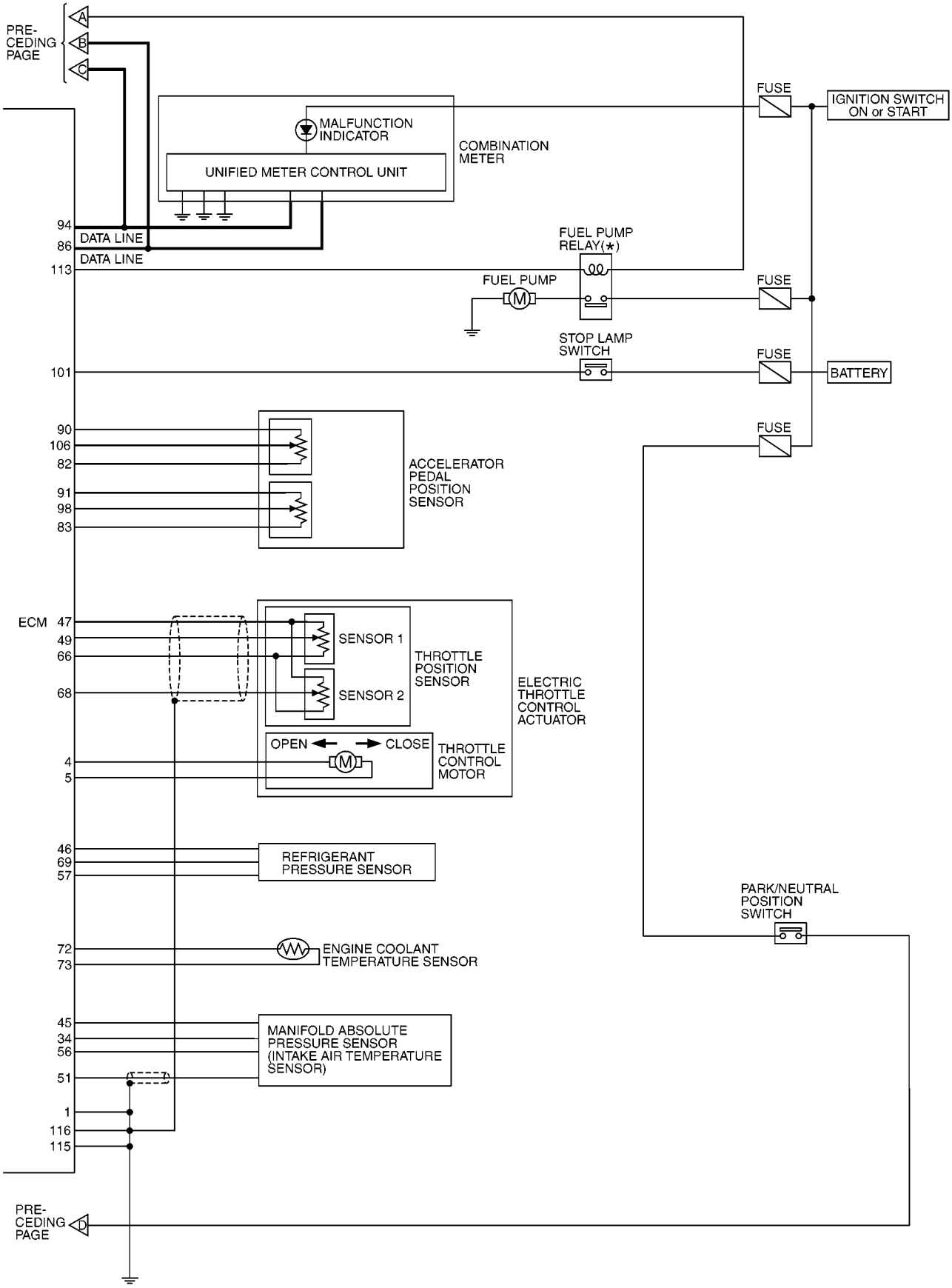
PRE-CEDING PAGE
A
B
C
MALFUNCTION INDICATOR
UNIFIED METER CONTROL UNIT
COMBINATION METER
FUSE
IGNITION SWITCH ON or START
94
86
113
DATA LINE
DATA LINE
FUEL PUMP RELAY(*)
FUEL PUMP
M
FUSE
STOP LAMP SWITCH
101
FUSE
BATTERY
FUSE
90
106
82
91
98
83
ACCELERATOR PEDAL POSITION SENSOR
ECM
47
49
66
68
SENSOR 1
SENSOR 2
THROTTLE POSITION SENSOR
ELECTRIC THROTTLE CONTROL ACTUATOR
OPEN
CLOSE
M
THROTTLE CONTROL MOTOR
4
5
46
69
57
REFRIGERANT PRESSURE SENSOR
PARK/NEUTRAL POSITION SWITCH
72
73
ENGINE COOLANT TEMPERATURE SENSOR
45
34
56
51
MANIFOLD ABSOLUTE PRESSURE SENSOR (INTAKE AIR TEMPERATURE SENSOR)
1
116
115
PRE-CEDING PAGE
D

MBWA1501E

ECM Harness Connector Terminal Layout

BBS0035I

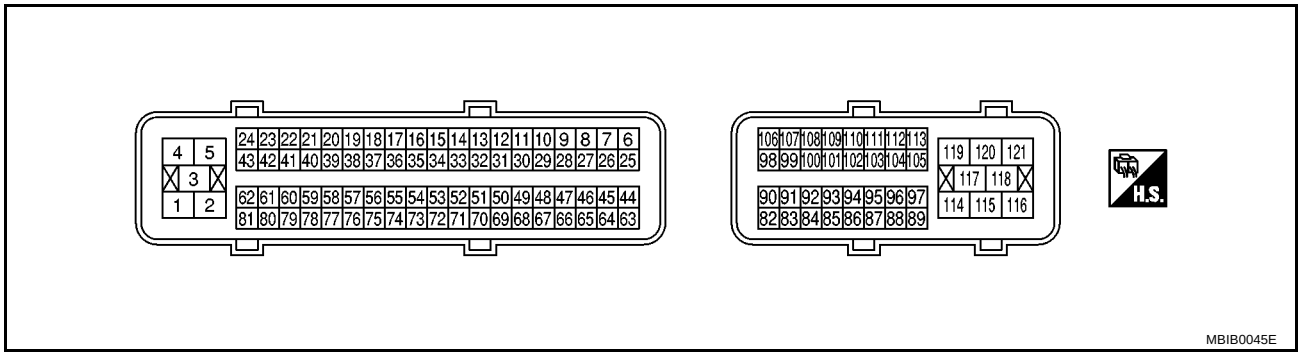

ECM Terminals and Reference Value

BBS0035J

PREPARATION

1. ECM is located left hand side of the engine room.
2. Remove ECM harness protector.

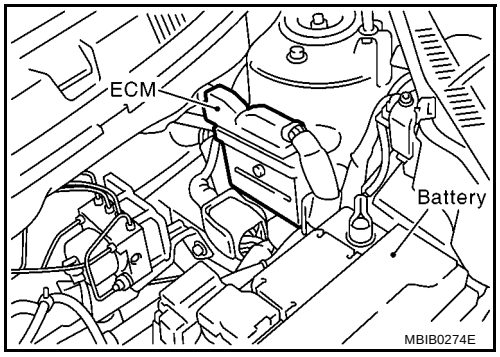

3. When disconnecting ECM harness connector, loosen it with levers as far as they will go as shown in the figure.
4. Connect a break-out box (SST) and Y-cable adapter (SST) between the ECM and ECM harness connector.
   - Use extreme care not to touch 2 pins at one time.
   - Data is for comparison and may not be exact.

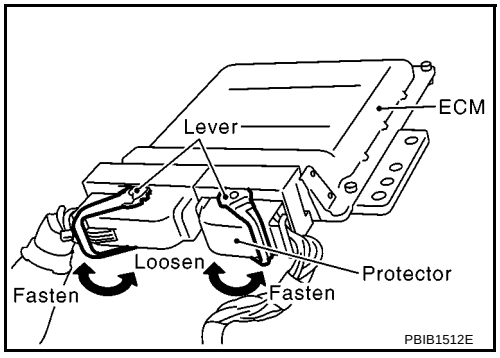

ECM INSPECTION TABLE

Specification data are reference values and are measured between each terminal and ground.
Pulse signal is measured by CONSULT-II.

CAUTION:

Do not use ECM ground terminals when measuring input/output voltage. Doing so may result in damage to the ECM's transistor. Use a ground other than ECM terminals, such as the ground.

TERMINAL NO.	WIRE COLOR	ITEM	CONDITION	DATA (DC Voltage)
1	B	ECM ground	**[Engine is running]** ● Idle speed	Body ground

TERMINAL NO.	WIRE COLOR	ITEM	CONDITION	DATA (DC Voltage)
2	GR	Heated oxygen sensor 2 heater	**[Engine is running]** ● Engine speed: Below 3,800 rpm after the following conditions are met. – Engine: After warming up – Keeping the engine speed between 3,500 and 4,000 rpm for 1 minute and at idle for 1 minute under no load.	0 - 1.0V
			[Ignition switch: ON] ● Engine stopped **[Engine is running]** ● Engine speed: Above 3,800 rpm	BATTERY VOLTAGE (11 - 14V)
3	LG	Throttle control motor relay power supply	**[Ignition switch: ON]**	BATTERY VOLTAGE (11 - 14V)
4	L	Throttle control motor (Close)	**[Ignition switch: ON]** ● **Engine stopped** ● Shift lever position: 1st ● Accelerator pedal: Fully released	0 - 14V★ 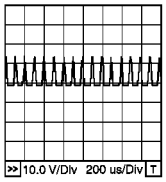 PBIB0534E
5	P	Throttle control motor (Open)	**[Ignition switch: ON]** ● **Engine stopped** ● Shift lever position: 1st ● Accelerator pedal: Fully depressed	0 - 14V★ 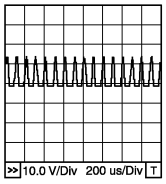 PBIB0533E
13	Y	Crankshaft position sensor (POS)	**[Engine is running]** ● **Warm-up condition** ● Idle speed **NOTE:** The pulse cycle changes depending on rpm at idle.	Approximately 3.0V★ 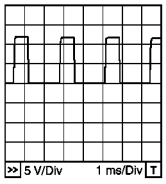 PBIB0527E
			[Engine is running] ● Engine speed: 2,000 rpm	Approximately 3.0V★ 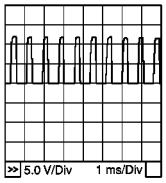 PBIB0528E

TERMINAL NO.	WIRE COLOR	ITEM	CONDITION	DATA (DC Voltage)
14	R	Camshaft position sensor (PHASE)	**[Engine is running]** ● **Warm-up condition** ● Idle speed **NOTE:** The pulse cycle changes depending on rpm at idle.	1.0 - 4.0V★ 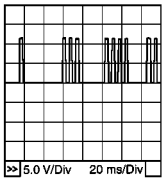 PBIB0525E
			[Engine is running] ● Engine speed: 2,000 rpm	1.0 - 4.0V★ 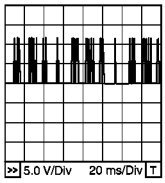 PBIB0526E
15	W	Knock sensor	**[Engine is running]** ● Idle speed	Approximately 2.5V
16	LG	Heated oxygen sensor 2	**[Engine is running]** ● Revving engine from idle to 3,000rpm quickly after the following conditions are met. – Engine: After warming up – Keeping the engine speed between 3,500 and 4,000 rpm for 1 minute and at idle for 1 minute under no load.	0 - Approximately 1.0V
19	LG	EVAP canister purge volume control solenoid valve	**[Engine is running]** ● Idle speed	BATTERY VOLTAGE (11 - 14V)★ 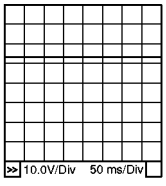 PBIB0050E
			[Engine is running] ● Engine speed: About 2,000 rpm (More than 100 seconds after starting engine)	Approximately 10V★ 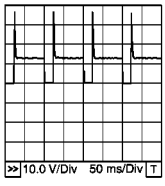 PBIB0520E

TERMINAL NO.	WIRE COLOR	ITEM	CONDITION	DATA (DC Voltage)
22 23 41 42	O L R GR	Fuel injector No. 3 Fuel injector No. 1 Fuel injector No. 4 Fuel injector No. 2	**[Engine is running]** ● **Warm-up condition** ● Idle speed **NOTE:** The pulse cycle changes depending on rpm at idle.	BATTERY VOLTAGE (11 - 14V)★ 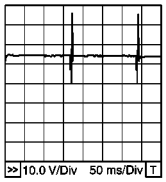 PBIB0529E
			[Engine is running] ● **Warm-up condition** ● Engine speed: 2,000 rpm	BATTERY VOLTAGE (11 - 14V)★ 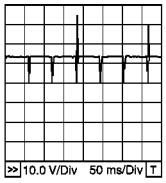 PBIB0530E
24	Y	Heated oxygen sensor 1 heater	**[Engine is running]** ● **Warm-up condition** ● Engine speed: Below 3,600 rpm	Approximately 7.0V★ 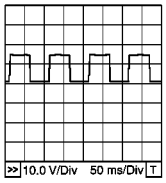 PBIB0519E
			[Engine is running] ● Engine speed: Above 3,600 rpm	BATTERY VOLTAGE (11 - 14V)
29	B	Sensor ground (Camshaft position sensor)	**[Engine is running]** ● **Warm-up condition** ● Idle speed	Approximately 0V
30	L	Sensor ground (Crankshaft position sensor)	**[Engine is running]** ● **Warm-up condition** ● Idle speed	Approximately 0V
34	O	Intake air temperature sensor	**[Engine is running]**	Approximately 0 - 4.8V Output voltage varies with intake air temperature.
35	BR	Heated oxygen sensor 1	**[Engine is running]** ● **Warm-up condition** ● Engine speed: 2,000 rpm	0 - Approximately 1.0V (Periodically change)
45	L	Sensor power supply	**[Ignition switch: ON]**	Approximately 5V
46	W	Sensor power supply (Refrigerant pressure sensor)	**[Ignition switch: ON]**	Approximately 5V
47	L	Sensor power supply (Throttle position sensor)	**[Ignition switch: ON]**	Approximately 5V

TERMINAL NO.	WIRE COLOR	ITEM	CONDITION	DATA (DC Voltage)
49	Y	Throttle position sensor 1	**[Ignition switch: ON]** ● **Engine stopped** ● Shift lever position: 1st ● Accelerator pedal: Fully released	More than 0.36V
			[Ignition switch: ON] ● **Engine stopped** ● Shift lever position: 1st ● Accelerator pedal: Fully depressed	Less than 4.75V
51	W	Manifold absolute pressure sensor	**[Engine is running]** ● **Warm-up condition** ● Idle speed	Approximately 1.5V
			[Engine is running] ● **Warm-up condition** ● Engine speed: 2,000 rpm	Approximately 1.2V
54	—	Sensor ground (Knock sensor)	**[Engine is running]** ● **Warm-up condition** ● Idle speed	Approximately 0V
56	B	Sensor ground (Manifold absolute pressure sensor)	**[Engine is running]** ● **Warm-up condition** ● Idle speed	Approximately 0V
57	Y	Sensor ground (Refrigerant pressure sensor)	**[Engine is running]** ● **Warm-up condition** ● Idle speed	Approximately 0V
60 61 79 80	Y V G BR	Ignition signal No. 3 Ignition signal No. 1 Ignition signal No. 4 Ignition signal No. 2	**[Engine is running]** ● **Warm-up condition** ● Idle speed **NOTE:** The pulse cycle changes depending on rpm at idle.	0 - 0.1V★ 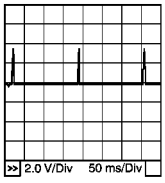 PBIB0521E
			[Engine is running] ● **Warm-up condition** ● Engine speed: 2,000 rpm	0 - 0.2V★ 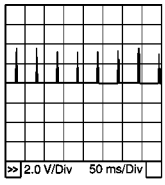 PBIB0522E

TERMINAL NO.	WIRE COLOR	ITEM	CONDITION	DATA (DC Voltage)
62	LG	Intake valve timing control solenoid valve	**[Engine is running]** ● **Warm-up condition** ● Idle speed	BATTERY VOLTAGE (11 - 14V)
			[Engine is running] ● **Warm-up condition** ● Engine speed: 2,000 rpm	Approximately 4V - BATTERY VOLTAGE (11 - 14V)★ 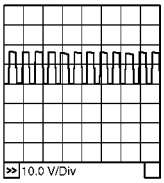 PBIB1790E
66	B	Sensor ground (Throttle position sensor)	**[Engine is running]** ● **Warm-up condition** ● Idle speed	Approximately 0V
68	R	Throttle position sensor 2	**[Ignition switch: ON]** ● **Engine stopped** ● Shift lever position: 1st ● Accelerator pedal: Fully released	Less than 4.75V
			[Ignition switch: ON] ● **Engine stopped** ● Shift lever position: 1st ● Accelerator pedal: Fully depressed	More than 0.36V
69	BR	Refrigerant pressure sensor	**[Engine is running]** ● **Warm-up condition** ● Both A/C switch and blower fan switch: ON (Compressor operates.)	1.0 - 4.0V
72	P	Engine coolant temperature sensor	**[Engine is running]**	Approximately 0 - 4.8V Output voltage varies with engine coolant temperature.
73	B	Sensor ground (Engine coolant temperature sensor)	**[Engine is running]** ● **Warm-up condition** ● Idle speed	Approximately 0V
74	B	Sensor ground (Heated oxygen sensor)	**[Engine is running]** ● **Warm-up condition** ● Idle speed	Approximately 0V
82	B	Sensor ground (APP sensor 1)	**[Engine is running]** ● **Warm-up condition** ● Idle speed	Approximately 0V
83	B	Sensor ground (APP sensor 2)	**[Engine is running]** ● **Warm-up condition** ● Idle speed	Approximately 0V
85	LG	DATA link connector	**[Ignition switch: ON]** ● CONSULT-II: Disconnected	BATTERY VOLTAGE (11 - 14V)
86	Y	CAN communication line	**[Ignition switch: ON]**	1.0 - 2.5V
90	O	Sensor power supply (APP sensor 1)	**[Ignition switch: ON]**	Approximately 5V
91	BR	Sensor power supply (APP sensor 2)	**[Ignition switch: ON]**	Approximately 5V

TERMINAL NO.	WIRE COLOR	ITEM	CONDITION	DATA (DC Voltage)
94	L	CAN communication line	**[Ignition switch: ON]**	2.5 - 4.0V
98	G	Accelerator pedal position sensor 2	**[Ignition switch: ON]** ● **Engine stopped** ● Accelerator pedal: Fully released	0.3 - 0.6V
			[Ignition switch: ON] ● **Engine stopped** ● Accelerator pedal: Fully depressed	1.95 - 2.4V
101	R	Stop lamp switch	**[Ignition switch: OFF]** ● Brake pedal: Fully released	Approximately 0V
			[Ignition switch: OFF] ● Brake pedal: Slightly depressed	BATTERY VOLTAGE (11 - 14V)
102	GR	PNP switch	**[Ignition switch: ON]** ● Gear position: Neutral	Approximately 0V
			[Ignition switch: ON] ● Except the above gear position	BATTERY VOLTAGE (11 - 14V)
104	G	Throttle control motor relay	**[Ignition switch: OFF]**	BATTERY VOLTAGE (11 - 14V)
			[Ignition switch: ON]	0 - 1.0V
106	W	Accelerator pedal position sensor 1	**[Ignition switch: ON]** ● **Engine stopped** ● Accelerator pedal: Fully released	0.6 - 0.9V
			[Ignition switch: ON] ● **Engine stopped** ● Accelerator pedal: Fully depressed	3.9 - 4.7V
109	O	Ignition switch	**[Ignition switch: OFF]**	0V
			[Ignition switch: ON]	BATTERY VOLTAGE (11 - 14V)
111	P	ECM relay (Self shut-off)	**[Engine is running]** **[Ignition switch: OFF]** ● For a few seconds after turning ignition switch OFF	0 - 1.0V
			[Ignition switch: OFF] ● More than a few seconds passed after turning ignition switch OFF	BATTERY VOLTAGE (11 - 14V)
113	R	Fuel pump relay	**[Ignition switch: ON]** ● For 1 second after turning ignition switch ON **[Engine is running]**	0 - 1.0V
			[Ignition switch: ON] ● More than 1 second after turning ignition switch ON	BATTERY VOLTAGE (11 - 14V)
115 116	B B	ECM ground	**[Engine is running]** ● Idle speed	Body ground
119 120	G G	Power supply for ECM	**[Ignition switch: ON]**	BATTERY VOLTAGE (11 - 14V)
121	BR	Power supply for ECM (Back-up)	**[Ignition switch: OFF]**	BATTERY VOLTAGE (11 - 14V)

★: Average voltage for pulse signal (Actual pulse signal can be confirmed by oscilloscope.)

CONSULT-II Function (ENGINE)

BBS0035K

FUNCTION

Diagnostic test mode	Function
Work support	This mode enables a technician to adjust some devices faster and more accurately by following the indications on the CONSULT-II unit.
Self-diagnostic results	Self-diagnostic results such as 1st trip DTC, DTCs and 1st trip freeze frame data or freeze frame data can be read and erased quickly.*
Data monitor	Input/Output data in the ECM can be read.
Data monitor (SPEC)	Input/Output of the specification for Basic fuel schedule, A/F feedback control value and the other data monitor items can be read.
CAN diagnostic support monitor	The results of transmit/receive diagnosis of CAN communication can be read.
Active test	Diagnostic Test Mode in which CONSULT-II drives some actuators apart from the ECMs and also shifts some parameters in a specified range.
Function test	This mode is used to inform customers when their vehicle condition requires periodic maintenance.
ECM part number	ECM part number can be read.

*: The following emission-related diagnostic information is cleared when the ECM memory is erased.

- Diagnostic trouble codes
- 1st trip diagnostic trouble codes
- Freeze frame data
- 1st trip freeze frame data

ENGINE CONTROL COMPONENT PARTS/CONTROL SYSTEMS APPLICATION

Item			DIAGNOSTIC TEST MODE					
			WORK SUPPORT	SELF-DIAGNOSTIC RESULTS		DATA MONITOR	DATA MONITOR (SPEC)	ACTIVE TEST
				DTC*1	FREEZE FRAME DATA*2			
ENGINE CONTROL COMPONENT PARTS	INPUT	Crankshaft position sensor (POS)		×	×	×	×	
		Camshaft position sensor (PHASE)		×		×	×	
		Manifold absolute pressure sensor		×		×	×	
		Engine coolant temperature sensor		×	×	×	×	×
		Heated oxygen sensor 1		×		×	×	
		Heated oxygen sensor 2		×		×	×	
		Wheel sensor			×	×	×	
		Accelerator pedal position sensor		×		×	×	
		Throttle position sensor		×		×	×	
		Intake air temperature sensor			×	×	×	
		Knock sensor		×				
		Refrigerant pressure sensor				×	×	
		Closed throttle position switch (accelerator pedal position sensor signal)				×	×	
		Air conditioner switch				×	×	
		Park/neutral position (PNP) switch		×		×	×	
		Stop lamp switch		×		×	×	
		EPS control unit				×	×	
		Battery voltage				×	×	
		Electrical load signal				×	×	

Item			DIAGNOSTIC TEST MODE					
			WORK SUPPORT	SELF-DIAGNOSTIC RESULTS		DATA MONITOR	DATA MONITOR (SPEC)	ACTIVE TEST
				DTC*1	FREEZE FRAME DATA*2			
ENGINE CONTROL COMPONENT PARTS	OUTPUT	Fuel injector				×	×	×
		Power transistor (Ignition timing)				×	×	×
		Throttle control motor relay		×		×	×	
		Throttle control motor		×				
		EVAP canister purge volume control solenoid valve				×	×	×
		Air conditioner relay				×	×	
		Fuel pump relay	×			×	×	×
		Cooling fan relay		×		×	×	×
		Heated oxygen sensor 1 heater				×	×	
		Heated oxygen sensor 2 heater				×	×	
		Intake valve timing control solenoid valve		×		×	×	×

X: Applicable
*1: This item includes 1st trip DTCs.
*2: This mode includes 1st trip freeze frame data or freeze frame data. The items appear on CONSULT-II screen in freeze frame data mode only if a 1st trip DTC or DTC is detected. For details, refer to EC-478 .

INSPECTION PROCEDURE

Refer to GI-38, "CONSULT-II Data Link Connector (DLC) Circuit" .

WORK SUPPORT MODE

Work Item

WORK ITEM	CONDITION	USAGE
FUEL PRESSURE RELEASE	● FUEL PUMP WILL STOP BY TOUCHING START DURING IDLING. CRANK A FEW TIMES AFTER ENGINE STALLS.	When releasing fuel pressure from fuel line
IDLE AIR VOL LEARN	● THE IDLE AIR VOLUME THAT KEEPS THE ENGINE WITHIN THE SPECIFIED RANGE IS MEMORIZED IN ECM.	When learning the idle air volume
SELF-LEARNING CONT	● THE COEFFICIENT OF SELF-LEARNING CONTROL MIXTURE RATIO RETURNS TO THE ORIGINAL COEFFICIENT.	When clearing the coefficient of self-learning control value
TARGET IGN TIM ADJ*	● IDLE CONDITION	When adjusting target ignition timing
TARGET IDLE RPM ADJ*	● IDLE CONDITION	When setting target idle speed

*: This function is not necessary in the usual service procedure.

SELF-DIAG RESULTS MODE

Self Diagnostic Item

Regarding items of DTC and 1st trip DTC, refer to EC-476, "EMISSION-RELATED DIAGNOSTIC INFORMATION ITEMS" .

Freeze Frame Data and 1st Trip Freeze Frame Data

Freeze frame data item*	Description
DIAG TROUBLE CODE [PXXXX]	● The engine control component part/control system has a trouble code, it is displayed as PXXXX. (Refer to EC-451, "INDEX FOR DTC" .)
FUEL SYS-B1	● Fuel injection system status at the moment a malfunction is detected is displayed. ● One mode in the following is displayed. Mode2: Open loop due to detected system malfunction Mode3: Open loop due to driving conditions (power enrichment, deceleration enleanment) Mode4: Closed loop - using oxygen sensor(s) as feedback for fuel control Mode5: Open loop - has not yet satisfied condition to go to closed loop
CAL/LD VALUE [%]	● The calculated load value at the moment a malfunction is detected is displayed.
COOLANT TEMP [°C] or [°F]	● The engine coolant temperature at the moment a malfunction is detected is displayed.
L-FUEL TRM-B1 [%]	● “Long-term fuel trim” at the moment a malfunction is detected is displayed. ● The long-term fuel trim indicates much more gradual feedback compensation to the base fuel schedule than short-term fuel trim.
S-FUEL TRM-B1 [%]	● “Short-term fuel trim” at the moment a malfunction is detected is displayed. ● The short-term fuel trim indicates dynamic or instantaneous feedback compensation to the base fuel schedule.
ENGINE SPEED [rpm]	● The engine speed at the moment a malfunction is detected is displayed.
VEHICL SPEED [km/h] or [mph]	● The vehicle speed at the moment a malfunction is detected is displayed.
B/FUEL SCHDL [msec]	● The base fuel schedule at the moment a malfunction is detected is displayed.
INT/A TEMP SE [°C] or [°F]	● The intake air temperature at the moment a malfunction is detected is displayed.

*: The items are the same as those of 1st trip freeze frame data.

DATA MONITOR MODE
Monitored Item

×: Applicable

Monitored item [Unit]	ECM INPUT SIG-NALS	MAIN SIG-NALS	Description	Remarks
ENG SPEED [rpm]	×	×	● Indicates the engine speed computed from the signals of the crankshaft position sensor (POS) and camshaft position sensor (PHASE).	● Accuracy becomes poor if engine speed drops below the idle rpm. ● If the signal is interrupted while the engine is running, an abnormal value may be indicated.
COOLAN TEMP/S [°C] or [°F]	×	×	● The engine coolant temperature (determined by the signal voltage of the engine coolant temperature sensor) is displayed.	● When the engine coolant temperature sensor is open or short-circuited, ECM enters fail-safe mode. The engine coolant temperature determined by the ECM is displayed.
HO2S1 (B1) [V]	×	×	● The signal voltage of the heated oxygen sensor 1 is displayed.	
HO2S2 (B1) [V]	×		● The signal voltage of the heated oxygen sensor 2 is displayed.	
HO2S1 MNTR (B1) [RICH/LEAN]	×	×	● Display of heated oxygen sensor 1 signal during air-fuel ratio feedback control: RICH: means the mixture became “rich”, and control is being affected toward a leaner mixture. LEAN: means the mixture became “lean”, and control is being affected toward a rich mixture.	● After turning ON the ignition switch, “RICH” is displayed until air-fuel mixture ratio feedback control begins. ● When the air-fuel ratio feedback is clamped, the value just before the clamping is displayed continuously.
HO2S2 MNTR (B1) [RICH/LEAN]	×		● Display of heated oxygen sensor 2 signal: RICH: means the amount of oxygen after three way catalyst is relatively small. LEAN: means the amount of oxygen after three way catalyst is relatively large.	● When the engine is stopped, a certain value is indicated.
A/F ALPHA-B1 [%]		×	● The mean value of the air-fuel ratio feedback correction factor per cycle is indicated.	● When the engine is stopped, a certain value is indicated. ● This data also includes the data for the air-fuel ratio learning control.
VHCL SPEED SE [km/h] or [mph]	×	×	● The vehicle speed computed from the vehicle speed signal is displayed.	
BATTERY VOLT [V]	×	×	● The power supply voltage of ECM is displayed.	
B/FUEL SCHDL [msec]		×	● “Base fuel schedule” indicates the fuel injection pulse width programmed into ECM, prior to any learned on board correction.	
ACCEL SEN 1 [V]	×	×	● The accelerator pedal position sensor signal voltage is displayed.	● ACCEL SEN 2 signal is converted by ECM internally. Thus, it differs from ECM terminal voltage signal.
ACCEL SEN 2 [V]	×			
THRTL SEN 1 [V]	×	×	● The throttle position sensor signal voltage is displayed.	● THRTL SEN 2 signal is converted by ECM internally. Thus, it differs from ECM terminal voltage signal.
THRTL SEN 2 [V]	×			
INT/A TEMP SE [°C] or [°F]	×	×	● The intake air temperature (determined by the signal voltage of the intake air temperature sensor) is indicated.	
TURBO BST SEN [V]	×		● The signal voltage of the manifold absolute pressure sensor is displayed.	

Monitored item [Unit]	ECM INPUT SIG-NALS	MAIN SIG-NALS	Description	Remarks
START SIGNAL [ON/OFF]	×	×	● Indicates start signal status [ON/OFF] computed by the ECM according to the signals of engine speed and battery voltage.	● After starting the engine, [OFF] is displayed regardless of the starter signal.
CLSD THL POS [ON/OFF]	×	×	● Indicates idle position [ON/OFF] computed by the ECM according to the accelerator pedal position sensor signal.	
AIR COND SIG [ON/OFF]	×	×	● Indicates [ON/OFF] condition of the air conditioner switch as determined by the air conditioner signal.	
P/N POSI SW [ON/OFF]	×	×	● Indicates [ON/OFF] condition from the park/neutral position (PNP) switch signal.	
PW/ST SIGNAL [ON/OFF]	×	×	● [ON/OFF] condition of the power steering system (determined by the signal sent from EPS control unit) is indicated.	
LOAD SIGNAL [ON/OFF]	×	×	● Indicates [ON/OFF] condition from the electrical load signal. ON: Rear window defogger switch is ON and/or lighting switch is in 2nd position. OFF: Both rear window defogger switch and lighting switch are OFF.	
IGNITION SW [ON/OFF]	×		● Indicates [ON/OFF] condition from ignition switch.	
HEATER FAN SW [ON/OFF]	×		● Indicates [ON/OFF] condition from the heater fan switch signal.	
BRAKE SW [ON/OFF]	×		● Indicates [ON/OFF] condition from the stop lamp switch signal.	
INJ PULSE-B1 [msec]		×	● Indicates the actual fuel injection pulse width compensated by ECM according to the input signals.	● When the engine is stopped, a certain computed value is indicated.
IGN TIMING [BTDC]		×	● Indicates the ignition timing computed by ECM according to the input signals.	● When the engine is stopped, a certain value is indicated.
PURG VOL C/V [%]			● Indicates the EVAP canister purge volume control solenoid valve control value computed by the ECM according to the input signals. ● The opening becomes larger as the value increases.	
INT/V TIM (B1) [°CA]			● Indicates [°CA] of intake camshaft advanced angle.	
INT/V SOL (B1) [%]			● The control value of the intake valve timing control solenoid valve (determined by ECM according to the input signals) is indicated. ● The advance angle becomes larger as the value increases.	
AIR COND RLY [ON/OFF]		×	● The air conditioner relay control condition (determined by ECM according to the input signals) is indicated.	
FUEL PUMP RLY [ON/OFF]		×	● Indicates the fuel pump relay control condition determined by ECM according to the input signals.	

Monitored item [Unit]	ECM INPUT SIG-NALS	MAIN SIG-NALS	Description	Remarks
THRTL RELAY [ON/OFF]		×	● Indicates the throttle control motor relay control condition determined by the ECM according to the input signals.	
COOLING FAN [HI/LOW/OFF]		×	● Indicates the condition of the cooling fan (determined by ECM according to the input signals). HI: High speed operation LOW: Low speed operation OFF: Stop	
HO2S1 HTR (B1) [ON/OFF]			● Indicates [ON/OFF] condition of heated oxygen sensor 1 heater determined by ECM according to the input signals.	
HO2S2 HTR (B1) [ON/OFF]			● Indicates [ON/OFF] condition of heated oxygen sensor 2 heater determined by ECM according to the input signals.	
IDL A/V LEARN [YET/CMPLT]			● Display the condition of idle air volume learning YET: Idle air volume learning has not been performed yet. CMPLT: Idle air volume learning has already been performed successfully.	
TRVL AFTER MIL [km] or [mile]			● Distance traveled while MI is activated.	
O2 SEN HTR DTY [%]			● Indicates the heated oxygen sensor 1 heater control valve computed by the ECM according to the input signals.	
AC PRESS SEN [V]	×		● The signal voltage from the refrigerant pressure sensor is displayed.	
Voltage [V]			● Voltage, frequency, duty cycle or pulse width measured by the probe.	● Only “#” is displayed if item is unable to be measured. ● Figures with “#”s are temporary ones. They are the same figures as an actual piece of data which was just previously measured.
Frequency [msec], [Hz] or [%]				
DUTY-HI				
DUTY-LOW				
PLS WIDTH-HI				
PLS WIDTH-LOW				

NOTE:
- Any monitored item that does not match the vehicle being diagnosed is deleted from the display automatically.

DATA MONITOR (SPEC) MODE

Monitored Item

Monitored item [Unit]	ECM INPUT SIG-NALS	MAIN SIG-NALS	Description	Remarks
ENG SPEED [rpm]	×		● Indicates the engine speed computed from the signal of the crankshaft position sensor (POS) and camshaft position sensor (PHASE).	
B/FUEL SCHDL [msec]			● “Base fuel schedule” indicates the fuel injection pulse width programmed into ECM, prior to any learned on board correction.	● When engine is running specification range is indicated.
A/F ALPHA-B1 [%]		×	● The mean value of the air-fuel ratio feedback correction factor per cycle is indicated.	● When engine is running specification range is indicated. ● This data also includes the data for the air-fuel ratio learning control.

NOTE:
- Any monitored item that does not match the vehicle being diagnosed is deleted from the display automatically.

ACTIVE TEST MODE

Test Item

TEST ITEM	CONDITION	JUDGEMENT	CHECK ITEM (REMEDY)
FUEL INJECTION	● Engine: Return to the original trouble condition ● Change the amount of fuel injection using CONSULT-II.	If trouble symptom disappears, see CHECK ITEM.	● Harness and connectors ● Fuel injector ● Heated oxygen sensor 1
IGNITION TIMING	● Engine: Return to the original trouble condition ● Timing light: Set ● Retard the ignition timing using CONSULT-II.	If trouble symptom disappears, see CHECK ITEM.	● Perform Idle Air Volume Learning.
POWER BALANCE	● Engine: After warming up, idle the engine. ● A/C switch: OFF ● Shift lever: Neutral ● Cut off each fuel injector signal one at a time using CONSULT-II.	Engine runs rough or dies.	● Harness and connectors ● Compression ● Fuel injector ● Power transistor ● Spark plug ● Ignition coil
COOLING FAN*	● Ignition switch: ON ● Turn the cooling fan “HI”, “LOW” and “OFF” with CONSULT-II.	Cooling fan moves and stops.	● Harness and connectors ● Cooling fan relay ● Cooling fan motor
ENG COOLANT TEMP	● Engine: Return to the original trouble condition ● Change the engine coolant temperature using CONSULT-II.	If trouble symptom disappears, see CHECK ITEM.	● Harness and connectors ● Engine coolant temperature sensor ● Fuel injector
FUEL PUMP RELAY	● Ignition switch: ON (Engine stopped) ● Turn the fuel pump relay ON and OFF using CONSULT-II and listen to operating sound.	Fuel pump relay makes the operating sound.	● Harness and connectors ● Fuel pump relay

TEST ITEM	CONDITION	JUDGEMENT	CHECK ITEM (REMEDY)
PURG VOL CONT/V	● Engine: After warming up, run engine at 1,500 rpm. ● Change the EVAP canister purge volume control solenoid valve opening percent using CONSULT-II.	Engine speed changes according to the opening percent.	● Harness and connectors ● Solenoid valve
V/T ASSIGN ANGLE	● Engine: Return to the original trouble condition ● Change intake valve timing using CONSULT-II.	If trouble symptom disappears, see CHECK ITEM.	● Harness and connectors ● Intake valve timing control solenoid valve

*: Leaving cooling fan OFF with CONSULT-II while engine is running may cause the engine to overheat.

REAL TIME DIAGNOSIS IN DATA MONITOR MODE (RECORDING VEHICLE DATA)

Description

CONSULT-II has two kinds of triggers and they can be selected by touching “SETTING” in “DATA MONITOR” mode.

1. “AUTO TRIG” (Automatic trigger):
   - The malfunction will be identified on the CONSULT-II screen in real time.
     In other words, DTC/1st trip DTC and malfunction item will be displayed if the malfunction is detected by ECM.
     At the moment a malfunction is detected by ECM, “MONITOR” in “DATA MONITOR” screen is changed to “Recording Data ... xx%” as shown in the figure, and the data after the malfunction detection is recorded. Then when the percentage reached 100%, “REAL-TIME DIAG” screen is displayed. If “STOP” is touched on the screen during “Recording Data ... xx%”, “REAL-TIME DIAG” screen is also displayed.
     The recording time after the malfunction detection and the recording speed can be changed by “TRIGGER POINT” and “Recording Speed”. Refer to CONSULT-II OPERATION MANUAL.
2. “MANU TRIG” (Manual trigger):
   - DTC/1st trip DTC and malfunction item will not be displayed automatically on CONSULT-II screen even though a malfunction is detected by ECM.
     DATA MONITOR can be performed continuously even though a malfunction is detected.

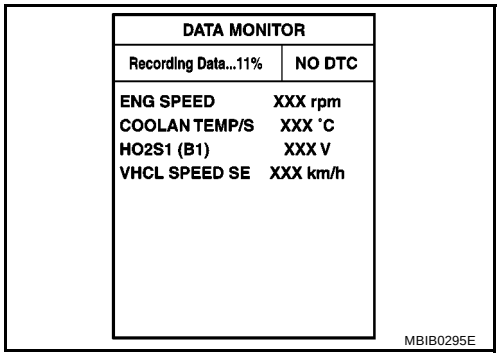

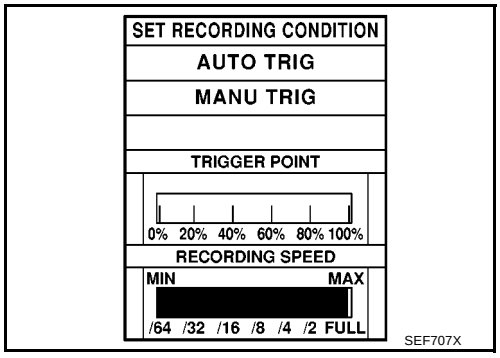

Operation

1. “AUTO TRIG”
   - While trying to detect the DTC/1st trip DTC by performing the DTC Confirmation Procedure, be sure to select to “DATA MONITOR (AUTO TRIG)” mode. You can confirm the malfunction at the moment it is detected.
   - While narrowing down the possible causes, CONSULT-II should be set in “DATA MONITOR (AUTO TRIG)” mode, especially in case the incident is intermittent.
     When you are inspecting the circuit by gently shaking (or twisting) the suspicious connectors, components and harness in the DTC Confirmation Procedure, the moment a malfunction is found the DTC/1st trip DTC will be displayed. (Refer to Incident Simulation Tests in GI-25, "How to Perform Efficient Diagnosis for an Electrical Incident" .)
2. “MANU TRIG”
   - If the malfunction is displayed as soon as “DATA MONITOR” is selected, reset CONSULT-II to “MANU TRIG”. By selecting “MANU TRIG” you can monitor and store the data. The data can be utilized for further diagnosis, such as a comparison with the value for the normal operating condition.

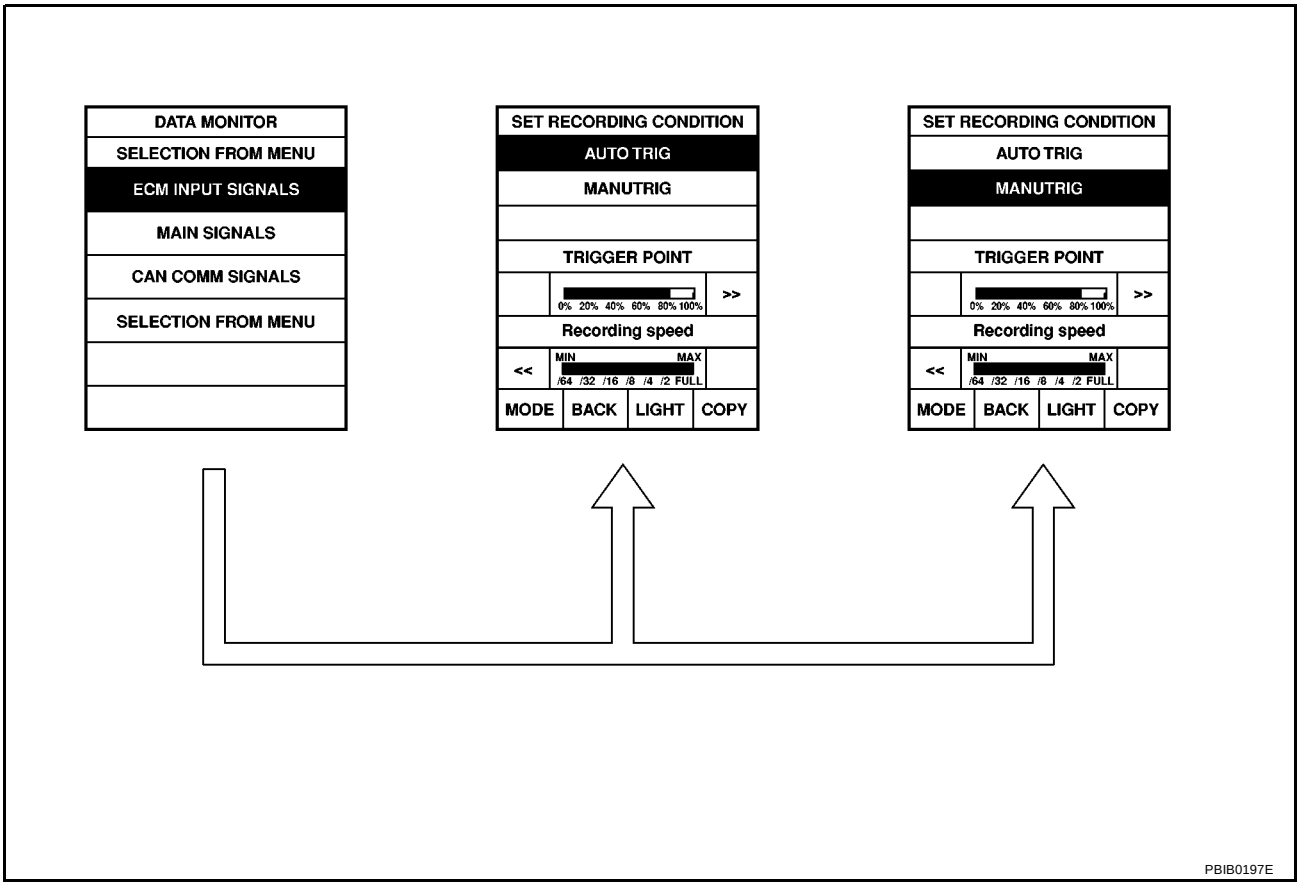

CONSULT-II Reference Value in Data Monitor Mode

BBS0035L

Remarks:
- Specification data are reference values.
- Specification data are output/input values which are detected or supplied by the ECM at the connector.
  * Specification data may not be directly related to their components signals/values/operations.

MONITOR ITEM	CONDITION		SPECIFICATION
ENG SPEED	● Run engine and compare CONSULT-II value with the tachometer indication.		Almost the same speed as the tachometer indication.
B/FUEL SCHDL	See EC-EC-532, "TROUBLE DIAGNOSIS - SPECIFICATION VALUE" .		
A/F ALPHA-B1	See EC-EC-532, "TROUBLE DIAGNOSIS - SPECIFICATION VALUE" .		
COOLAN TEMP/S	● Engine: After warming up		More than 70°C (158°F)
HO2S1 (B1)	● Engine: After warming up	Maintaining engine speed at 2,000 rpm	0 - 0.3V ←→ Approx. 0.6 - 1.0V
HO2S2 (B1)	● Revving engine from idle to 3,000 rpm quickly after the following conditions are met. – Engine: After warning up – Keeping the engine speed between 3,500 and 4,000 rpm for 1 minute and at idle for 1 minute under no load.		0 - 0.3V ←→ Approx. 0.6 - 1.0V
HO2S1 MNTR (B1)	● Engine: After warming up	Maintaining engine speed at 2,000 rpm	LEAN ←→ RICH Changes more than 5 times during 10 seconds.
HO2S2 MNTR (B1)	● Revving engine from idle to 3,000 rpm quickly after the following conditions are met. – Engine: After warning up – Keeping the engine speed between 3,500 and 4,000 rpm for 1 minute and at idle for 1 minute under no load.		LEAN ←→ RICH
VHCL SPEED SE	● Turn drive wheels and compare CONSULT-II value with the speedometer indication.		Almost the same speed as the speedometer indication.

MONITOR ITEM	CONDITION		SPECIFICATION
BATTERY VOLT	● Ignition switch: ON (Engine stopped)		11 - 14V
ACCEL SEN 1	● Ignition switch: ON (Engine stopped)	Accelerator pedal: Fully released	0.6 - 0.9V
		Accelerator pedal: Fully depressed	4.0 - 4.8V
ACCEL SEN 2*1	● Ignition switch: ON (Engine stopped)	Accelerator pedal: Fully released	0.6 - 0.9V
		Accelerator pedal: Fully depressed	3.9 - 4.8V
THRTL SEN 1 THRTL SEN 2*1	● Ignition switch: ON (Engine stopped) ● Shift lever: 1st	Accelerator pedal: Fully released	More than 0.36V
		Accelerator pedal: Fully depressed	Less than 4.75V
TURBO BST SEN	● Engine: After warming up ● Air conditioner switch: OFF ● Shift lever: Neutral ● No load	Idle	Approximately 1.5V
		2,500 rpm	Approximately 1.2V
START SIGNAL	● Ignition switch: ON → START → ON		OFF → ON → OFF
CLSD THL POS	● Ignition switch: ON (Engine stopped)	Accelerator pedal: Fully released	ON
		Accelerator pedal: Slightly depressed	OFF
AIR COND SIG	● Engine: After warming up, idle the engine	Air conditioner switch: OFF	OFF
		Air conditioner switch: ON (Compressor operates.)	ON
P/N POSI SW	● Ignition switch: ON	Shift lever: Neutral	ON
		Shift lever: Except above	OFF
PW/ST SIGNAL	● Engine: After warming up, idle the engine	Steering wheel: Not being turned.	OFF
		Steering wheel: Being turned.	ON
LOAD SIGNAL	● Ignition switch: ON	Rear window defogger switch is ON and/or lighting switch is in 2nd.	ON
		Rear window defogger switch is OFF and lighting switch is OFF.	OFF
IGNITION SW	● Ignition switch: ON → OFF → ON		ON → OFF → ON
HEATER FAN SW	● Engine: After warming up, idle the engine	Heater fan: Operating.	ON
		Heater fan: Not operating	OFF
BRAKE SW	● Ignition switch: ON	Brake pedal: Fully released	OFF
		Brake pedal: Slightly depressed	ON
INJ PULSE-B1	● Engine: After warming up ● Air conditioner switch: OFF ● Shift lever: Neutral ● No load	Idle	2.0 - 3.0 msec
		2,000 rpm	1.9 - 2.9 msec
IGN TIMING	● Engine: After warming up ● Air conditioner switch: OFF ● Shift lever: Neutral ● No load	Idle	0° - 10° BTDC
		2,000 rpm	25° - 45° BTDC
PURG VOL C/V	● Engine: After warming up ● Shift lever: Neutral ● Air conditioner switch: OFF ● No load	Idle	0%
		2,000 rpm	20 - 30%
INT/V TIM (B1)	● Engine: After warming up ● Air conditioner switch: OFF ● Shift lever: Neutral ● No load	Idle	–5° - 5°CA
		2,000 rpm	Approx. 0° - 20°CA

MONITOR ITEM	CONDITION		SPECIFICATION
INT/V SOL (B1)	● Engine: After warming up ● Air conditioner switch: OFF ● Shift lever: Neutral ● No load	Idle	0% - 2%
		2,000 rpm	Approx. 0% - 50%
AIR COND RLY	● Engine: After warming up, idle the engine	Air conditioner switch: OFF	OFF
		Air conditioner switch: ON (Compressor operates)	ON
FUEL PUMP RLY	● For 1 second after turning ignition switch ON ● Engine running or cranking		ON
	● Except above conditions		OFF
THRTL RELAY	● Ignition switch: ON		ON
COOLING FAN	● Engine: After warming up, idle the engine ● Air conditioner switch: OFF	Engine coolant temperature: 94°C (201°F) or less	OFF
		Engine coolant temperature: Between 95°C (203°F) and 104°C (210°F)	LOW*2
		Engine coolant temperature: 105°C (212°F) or more	HIGH*2
HO2S1 HTR (B1)	● Engine: After warming up ● Engine speed: Below 3,600 rpm		ON
	● Engine speed: Above 3,600 rpm		OFF
HO2S2 HTR (B1)	● Engine speed: Below 3,800 rpm after the following conditions are met. – Engine: After warming up – Keeping the engine speed at between 3,500 to 4,000 rpm for 1 minute and at idle for 1 minute under no load		ON
	● Engine speed: Above 3,800 rpm		OFF
TRVL AFTER MIL	● Ignition switch: ON	Vehicle has traveled after MI has turned ON.	0 - 65,535 km (0 - 40,723 mile)
O2SEN HTR DTY	● Engine coolant temperature when engine started: More than 80°C (176°F) ● Engine speed: Below 3,600 rpm		Approx. 50%
AC PRESS SEN	● Ignition switch: ON (Engine stopped)		Approx. 0V
	● Engine: Idle ● Both A/C switch and blower fan switch: ON (Compressor operates)		1.0 - 4.0V

*1: Accelerator pedal position sensor 2 signal and throttle position sensor 2 signal are converted by ECM internally. Thus, they differ from ECM terminals voltage signal.
*2: Models without air conditioner, cooling fan operates only ON and OFF operation, but CONSULT-II display will change OFF, LOW and HI depends on engine coolant temperature.

Major Sensor Reference Graph in Data Monitor Mode

BBS0035M

The following are the major sensor reference graphs in “DATA MONITOR” mode.

CLSD THL POS, ACCEL SEN 1, THRTL SEN 1

Below is the data for “CLSD THL POS”, “ACCEL SEN 1” and “THRTL SEN 1” when depressing the accelerator pedal with the ignition switch ON and with shift lever in 1st position.
The signal of “ACCEL SEN 1” and “THRTL SEN 1” should rise gradually without any intermittent drop or rise after “CLSD THL POS” is changed from “ON” to “OFF”.

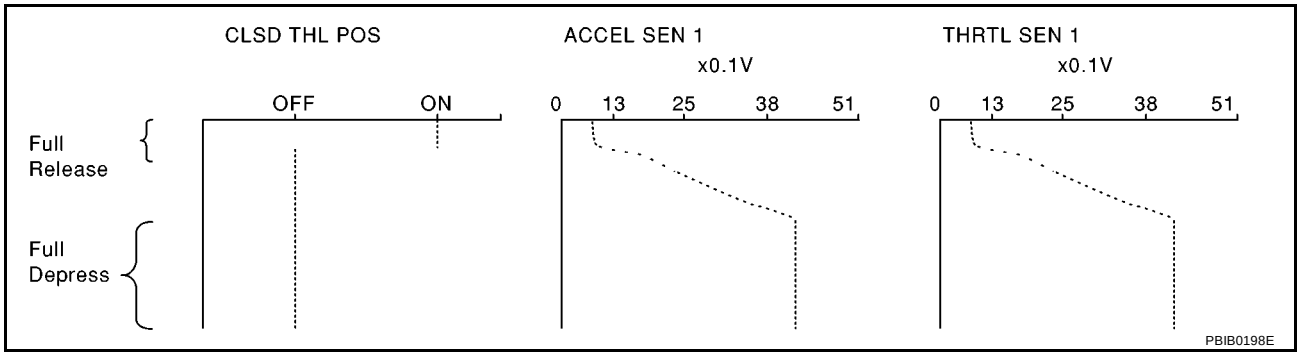

ENG SPEED, THRTL SEN 1, HO2S2 (B1), HO2S1 (B1), INJ PULSE-B1

Below is the data for “ENG SPEED”, “THRTL SEN 1”, “HO2S2 (B1)”, “HO2S1 (B1)” and “INJ PULSE-B1” when revving engine quickly up to 4,800 rpm under no load after warming up engine sufficiently.
Each value is for reference, the exact value may vary.

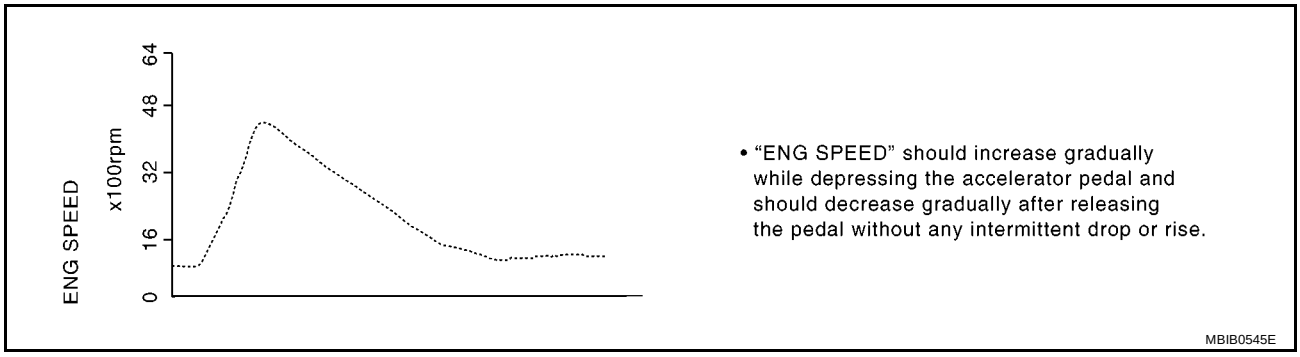

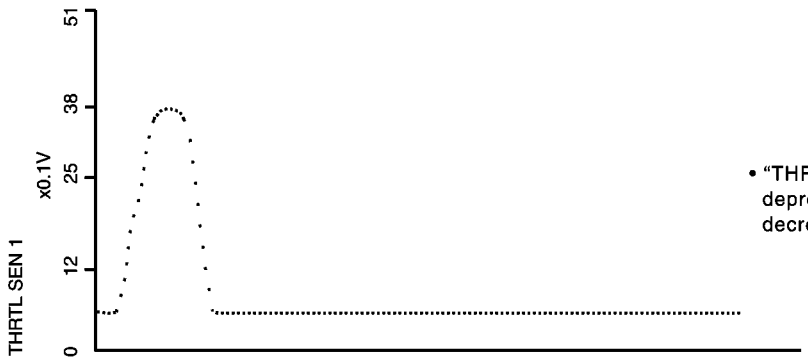

- "THRTL SEN 1" should increase while depressing the accelerator pedal and should decrease while releasing it.

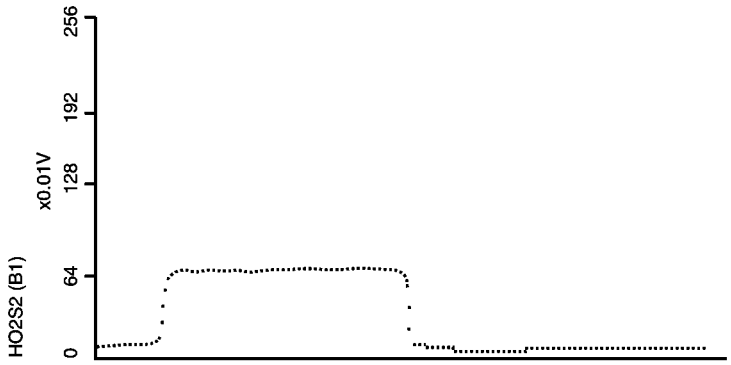

- "HO2S2 (B1)" may increase immediately after depressing the accelerator pedal and may decrease after releasing the pedal.

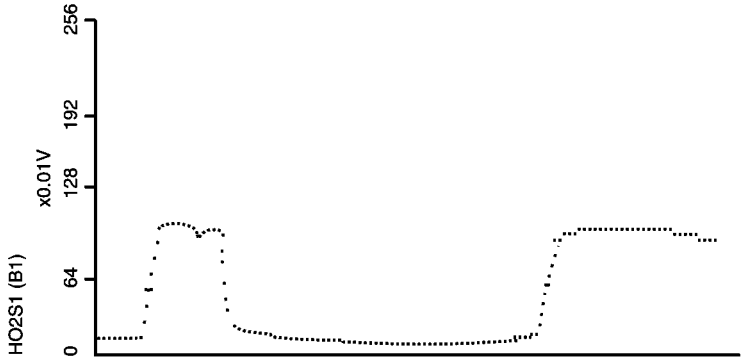

- "HO2S1 (B1)" may increase immediately after depressing the accelerator pedal and may decrease after releasing the pedal.

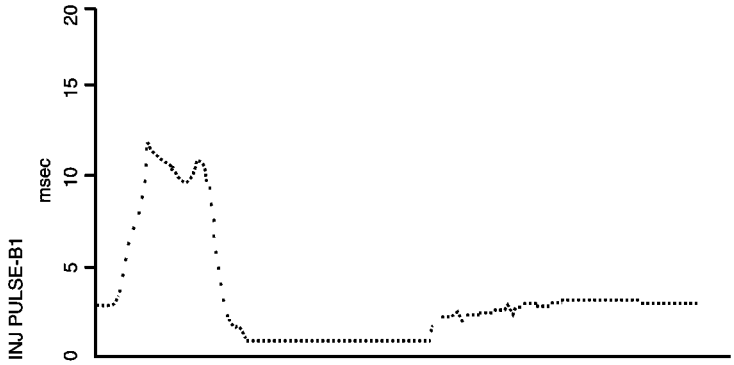

- "INJ PULSE-B1" should increase when depressing the accelerator pedal and should decrease when the pedal is released.

PBIB0668E

TROUBLE DIAGNOSIS - SPECIFICATION VALUE

PFP:00031

Description

BBS0035N

The specification (SP) value indicates the tolerance of the value that is displayed in “DATA MONITOR (SPEC)” mode of CONSULT-II during normal operation of the Engine Control System. When the value in “DATA MONITOR (SPEC)” mode is within the SP value, the Engine Control System is confirmed OK. When the value in “DATA MONITOR (SPEC)” mode is NOT within the SP value, the Engine Control System may have one or more malfunctions.
The SP value is used to detect malfunctions that may affect the Engine Control System, but will not light the MI.
The SP value will be displayed for the following three items:

- B/FUEL SCHDL (The fuel injection pulse width programmed into ECM prior to any learned on board correction)
- A/F ALPHA-B1 (The mean value of air-fuel ratio feedback correction factor per cycle)

Testing Condition

BBS0035O

- Vehicle driven distance: More than 5,000 km (3,107 miles)
- Barometric pressure: 98.3 - 104.3 kPa (0.983 - 1.043 bar, 1.003 - 1.064 kg/cm^2 , 14.25 - 15.12 psi)
- Atmospheric temperature: 20 - 30°C (68 - 86°F)
- Engine coolant temperature: 75 - 95°C (167 - 203°F)
- Engine speed: Idle
- Transmission: Warmed-up
  - After the engine is warmed up to normal operating temperature, drive vehicle for 5 minutes.
- Electrical load: Not applied
  - Rear window defogger switch, air conditioner switch, lighting switch are OFF. Steering wheel is straight ahead.

Inspection Procedure

BBS0035P

NOTE:
Perform “DATA MONITOR (SPEC)” mode in maximum scale display.

1. Perform EC-483, "Basic Inspection" .
2. Confirm that the testing conditions indicated above are met.
3. Select “B/FUEL SCHDL” and “A/F ALPHA-B1” in “DATA MONITOR (SPEC)” mode with CONSULT-II.
4. Make sure that monitor items are within the SP value.
5. If NG, go to EC-533, "Diagnostic Procedure" .

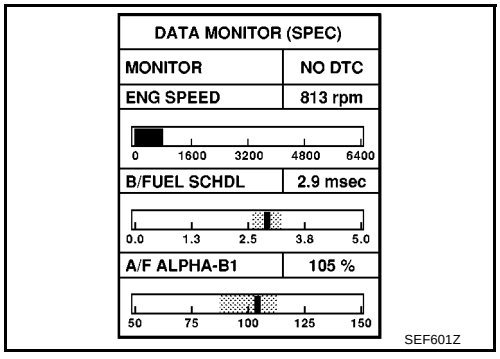

Diagnostic Procedure

BBS0035Q

OVERALL SEQUENCE

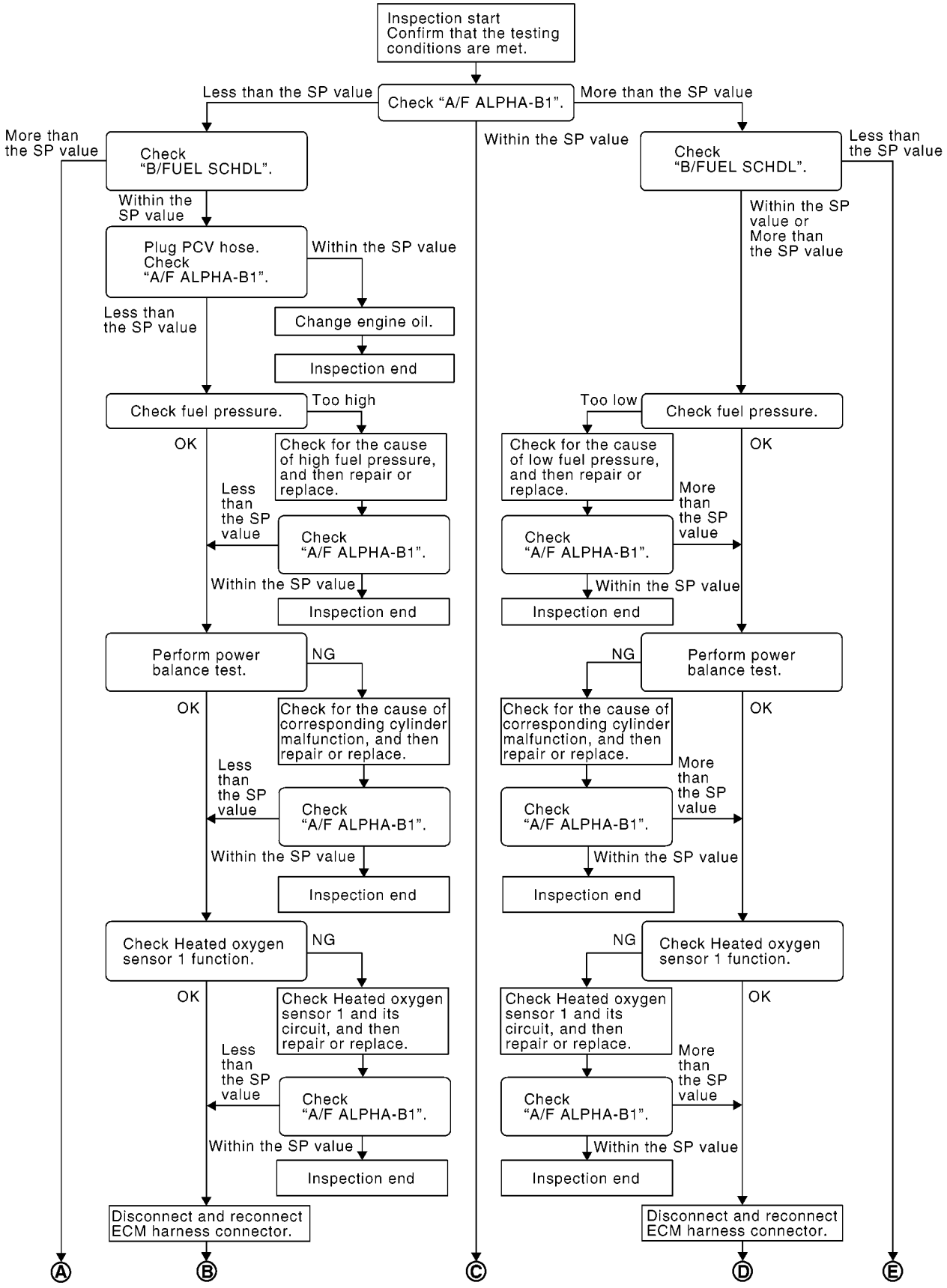

PBIB2384E

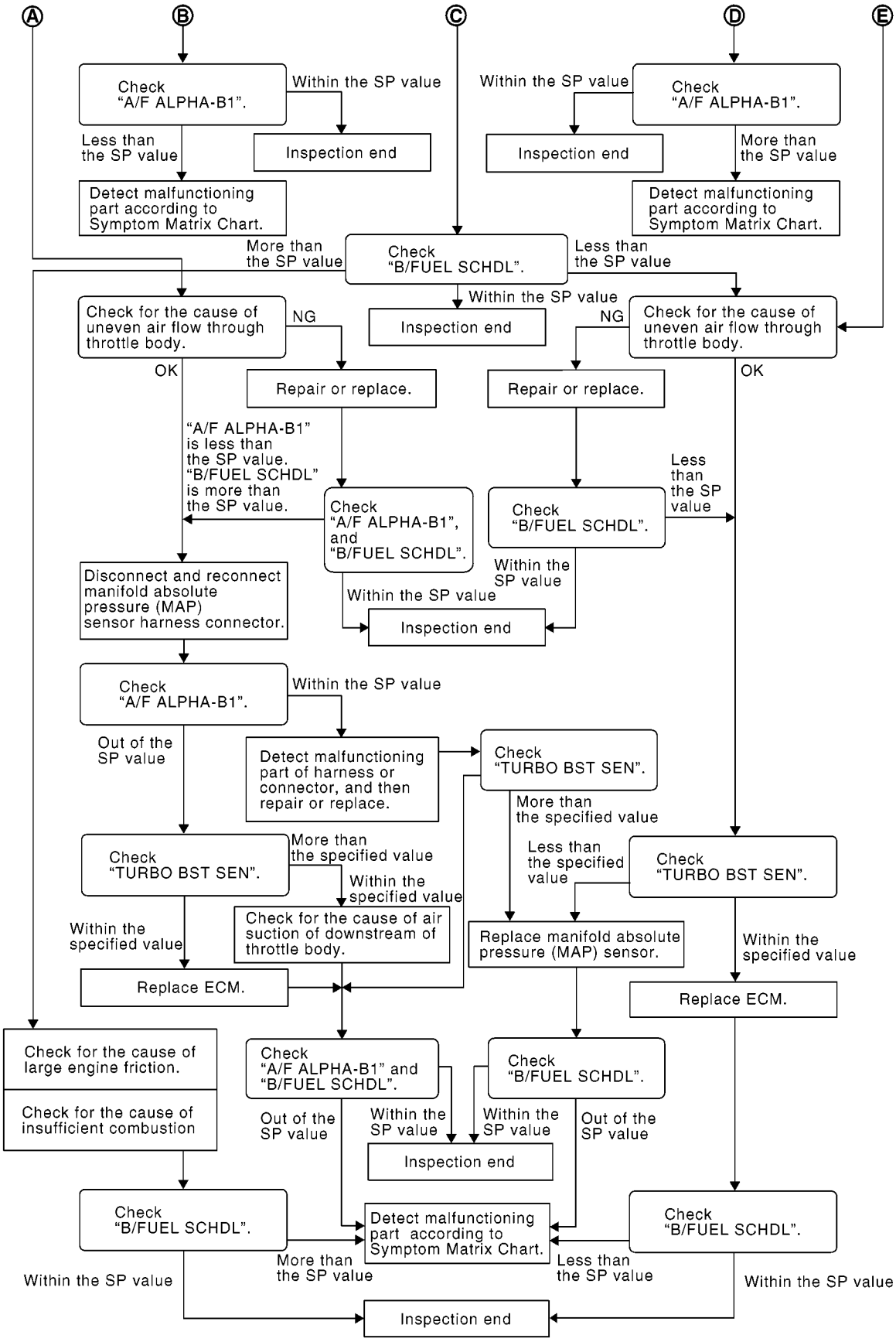
A
B
C
D
E
Check "A/F ALPHA-B1".
Within the SP value
Inspection end
Less than the SP value
Detect malfunctioning part according to Symptom Matrix Chart.
Within the SP value
Check "A/F ALPHA-B1".
Inspection end
More than the SP value
Detect malfunctioning part according to Symptom Matrix Chart.
More than the SP value
Check "B/FUEL SCHDL".
Less than the SP value
Within the SP value
Inspection end
Check for the cause of uneven air flow through throttle body.
NG
OK
Repair or replace.
Check for the cause of uneven air flow through throttle body.
NG
OK
Repair or replace.
"A/F ALPHA-B1" is less than the SP value. "B/FUEL SCHDL" is more than the SP value.
Check "A/F ALPHA-B1", and "B/FUEL SCHDL".
Check "B/FUEL SCHDL".
Less than the SP value
Within the SP value
Within the SP value
Inspection end
Disconnect and reconnect manifold absolute pressure (MAP) sensor harness connector.
Check "A/F ALPHA-B1".
Within the SP value
Out of the SP value
Detect malfunctioning part of harness or connector, and then repair or replace.
Check "TURBO BST SEN".
More than the specified value
Check "TURBO BST SEN".
More than the specified value
Within the specified value
Less than the specified value
Check "TURBO BST SEN".
Within the specified value
Check for the cause of air suction of downstream of throttle body.
Replace manifold absolute pressure (MAP) sensor.
Within the specified value
Replace ECM.
Replace ECM.
Check for the cause of large engine friction.
Check for the cause of insufficient combustion
Check "A/F ALPHA-B1" and "B/FUEL SCHDL".
Check "B/FUEL SCHDL".
Out of the SP value
Within the SP value
Within the SP value
Out of the SP value
Inspection end
Check "B/FUEL SCHDL".
Detect malfunctioning part according to Symptom Matrix Chart.
Check "B/FUEL SCHDL".
Within the SP value
More than the SP value
Less than the SP value
Within the SP value
Inspection end

MBIB1447E

DETAILED PROCEDURE

1. CHECK “A/F ALPHA-B1”

1. Start engine.
2. Confirm that the testing conditions are met. Refer to EC-532, "Testing Condition" .
3. Select “A/F ALPHA-B1” in “DATA MONITOR (SPEC)” mode, and make sure that the indication is within the SP value.

   NOTE:
   Check “A/F ALPHA-B1” for approximately 1 minute because they may fluctuate. It is NG if the indication is out of the SP value even a little.

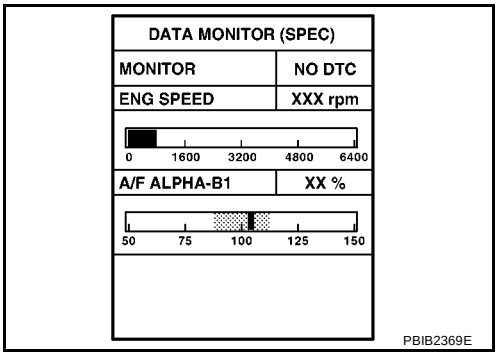

OK or NG

OK >> GO TO 17.
NG (Less than the SP value)>>GO TO 2.
NG (More than the SP value)>>GO TO 3.

2. CHECK “B/FUEL SCHDL”

Select “B/FUEL SCHDL” in “DATA MONITOR (SPEC)” mode, and make sure that the indication is within the SP value.

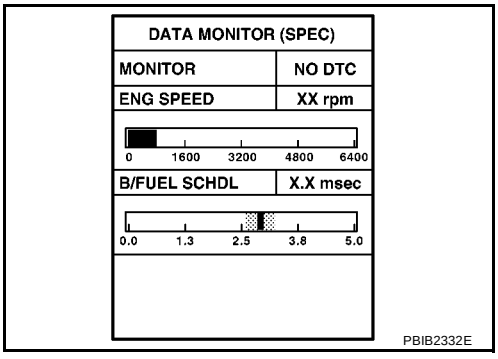

OK or NG

OK >> GO TO 4.
NG (More than the SP value)>>GO TO 19.

3. CHECK “B/FUEL SCHDL”

Select “B/FUEL SCHDL” in “DATA MONITOR (SPEC)” mode, and make sure that the indication is within the SP value.

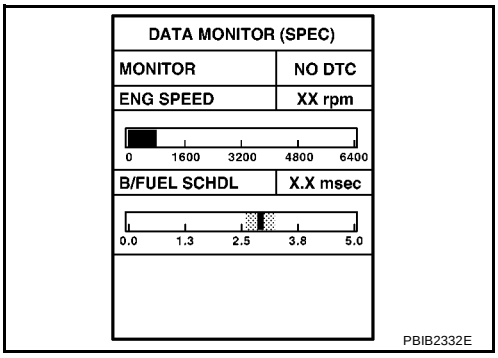

OK or NG

OK >> GO TO 6.
NG (More than the SP value)>>GO TO 6.
NG (Less than the SP value)>>GO TO 25.

4. CHECK “A/F ALPHA-B1”

1. Stop the engine.
2. Disconnect PCV hose, and then plug it.
3. Start engine.
4. Select “A/F ALPHA-B1” in “DATA MONITOR (SPEC)” mode, and make sure that the indication is within the SP value.

OK or NG

OK >> GO TO 5.
NG >> GO TO 6.

5. CHANGE ENGINE OIL

1. Stop the engine.
2. Change engine oil.

NOTE:
This symptom may occur when a large amount of gasoline is mixed with engine oil because of driving conditions (such as when engine oil temperature does not rise enough since a journey distance is too short during winter). The symptom will not be detected after changing engine oil or changing driving condition.

>> **INSPECTION END**

6. CHECK FUEL PRESSURE

Check fuel pressure. (Refer to EC-488, "Fuel Pressure Check" .)

OK or NG

OK >> GO TO 9.
NG (Fuel pressure is too high)>>Replace fuel pressure regulator, refer to EC-488, "Fuel Pressure Check" . GO TO 8.
NG (Fuel pressure is too low)>>GO TO 7.

7. DETECT MALFUNCTIONING PART

1. Check the following.
- Clogged and bent fuel hose and fuel tube
- Clogged fuel filter
- Fuel pump and its circuit (Refer to EC-750, "FUEL PUMP" .)
2. If NG, repair or replace the malfunctioning part. (Refer to EC-488, "Fuel Pressure Check" .)
If OK, replace fuel pressure regulator.

>> GO TO 8.

8. CHECK “A/F ALPHA-B1”

1. Start engine.
2. Select “A/F ALPHA-B1” in “DATA MONITOR (SPEC)” mode, and make sure that the indication is within the SP value.

OK or NG

OK >> **INSPECTION END**
NG >> GO TO 9.

9. PERFORM POWER BALANCE TEST

1. Perform “POWER BALANCE” in “ACTIVE TEST” mode.
2. Make sure that the each cylinder produces a momentary engine speed drop.

OK or NG

OK >> GO TO 12.
NG >> GO TO 10.

ACTIVE TEST	
POWER BALANCE	
MONITOR	
ENG SPEED	XXX rpm
MAS A/F SE-B1	XXX V

PBIB0133E

10. DETECT MALFUNCTIONING PART

1. Check the following.
- Ignition coil and its circuit (Refer to EC-784, "IGNITION SIGNAL" .)
- Fuel injector and its circuit (Refer to EC-744, "FUEL INJECTOR" .)
- Intake air leakage
- Low compression pressure (Refer to EM-60, "COMPRESSION PRESSURE INSPECTION" .)
2. If NG, repair or replace the malfunctioning part.
If OK, replace fuel injector. (It may be caused by leakage from fuel injector or clogging.)

>> GO TO 11.

11. CHECK “A/F ALPHA-B1”

1. Start engine.
2. Select “A/F ALPHA-B1” in “DATA MONITOR (SPEC)” mode, and make sure that the indication is within the SP value.

OK or NG

OK >> **INSPECTION END**
NG >> GO TO 12.

12. CHECK HEATED OXYGEN SENSOR 1 FUNCTION

1. Run engine at about 2,000 rpm for about 2 minutes under no load.
2. Select “HO2S1 MNTR (B1)”, in “DATA MONITOR” mode.
3. Running engine at 2,000 rpm under no load (The engine is warmed up to normal operating temperature.), check that the monitor fluctuates between LEAN and RICH more than 5 times during 10 seconds.

1 time : RICH → LEAN → RICH

2 times : RICH → LEAN → RICH → LEAN → RICH

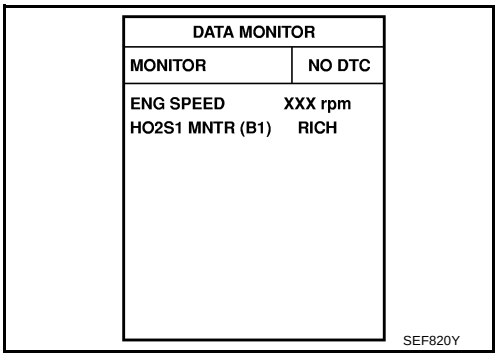

OK or NG

OK >> GO TO 15.
NG >> GO TO 13.

13. CHECK HEATED OXYGEN SENSOR 1 CIRCUIT

Check heated oxygen sensor 1 and its circuit. Refer to EC-577, "DTC P0132 HO2S1" .

>> GO TO 14.

14. CHECK “A/F ALPHA-B1”

1. Start engine.
2. Select “A/F ALPHA-B1” in “DATA MONITOR (SPEC)” mode, and make sure that the indication is within the SP value.

OK or NG

OK >> **INSPECTION END**
NG >> GO TO 15.

15. DISCONNECT AND RECONNECT ECM HARNESS CONNECTOR

1. Stop the engine.
2. Disconnect ECM harness connector. Check pin terminal and connector for damage, and then reconnect it.

>> GO TO 16.

16. CHECK “A/F ALPHA-B1”

1. Start engine.
2. Select “A/F ALPHA-B1” in “DATA MONITOR (SPEC)” mode, and make sure that the indication is within the SP value.

OK or NG

OK >> **INSPECTION END**
NG >> Detect malfunctioning part according to EC-499, "Symptom Matrix Chart" .

17. CHECK “B/FUEL SCHDL”

Select “B/FUEL SCHDL” in “DATA MONITOR (SPEC)” mode, and make sure that the indication is within the SP value.

OK or NG

OK >> **INSPECTION END**
NG (More than the SP value)>>GO TO 18.
NG (Less than the SP value)>>GO TO 27.

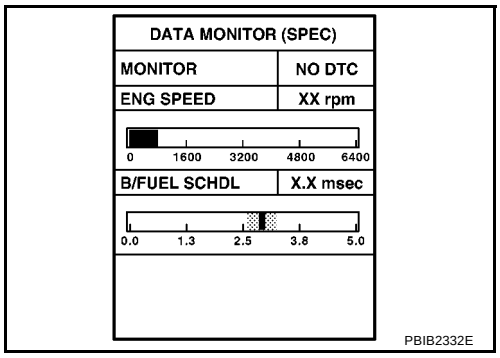

18. DETECT MALFUNCTIONING PART

1. Check for the cause of large engine friction. Refer to the following.
- Engine oil level too high
- Engine oil viscosity
- Belt tension of power steering, alternator, A/C compressor, etc. is excessive
- Noise from engine
- Noise from transmission, etc.
2. Check for the cause of insufficient combustion. Refer to the following.
- Valve clearance malfunction
- Intake valve timing control function malfunction
- Camshaft sprocket installation malfunction, etc.

>> Repair or replace malfunctioning part, and then GO TO 32.

19. CHECK INTAKE SYSTEM

Check for the cause of unsteady air flow passing through throttle body. Refer to the following.

- Crushed air ducts
- Malfunctioning seal of air cleaner element
- Uneven dirt of air cleaner element
- Improper specification of intake air system part

OK or NG

OK >> GO TO 21.
NG >> Repair or replace malfunctioning part, and then GO TO 20.

20. CHECK “A/F ALPHA-B1”, AND “B/FUEL SCHDL”

Select “A/F ALPHA-B1” and “B/FUEL SCHDL” in “DATA MONITOR (SPEC)” mode, and make sure that the indication is within the SP value.

OK or NG

OK >> **INSPECTION END**

NG (“B/FUEL SCHDL” is more, “A/F ALPHA-B1” is less than the SP value)>>GO TO 21.

21. DISCONNECT AND RECONNECT MANIFOLD ABSOLUTE PRESSURE (MAP) SENSOR HARNESS CONNECTOR

1. Stop the engine.
2. Disconnect manifold absolute pressure (MAP) sensor harness connector. Check pin terminal and connector for damage and then reconnect it again.

>> GO TO 22.

22. CHECK “A/F ALPHA-B1”

1. Start engine.
2. Select “A/F ALPHA-B1” in “DATA MONITOR (SPEC)” mode, and make sure that the indication is within the SP value.

OK or NG

OK >> 1. Detect malfunctioning part of manifold absolute pressure (MAP) sensor circuit and repair it. Refer to EC-559, "DTC P0107, P0108 MANIFOLD ABSOLUTE PRESSURE SENSOR" .
2. GO TO 26.

NG >> GO TO 23.

23. CHECK “TURBO BST SEN”

Select “TURBO BST SEN” in “DATA MONITOR” mode, and make sure that the indication is within the specified value as described below.

Idle: Approximately 1.5V

2,500 rpm: Approximately 1.2V

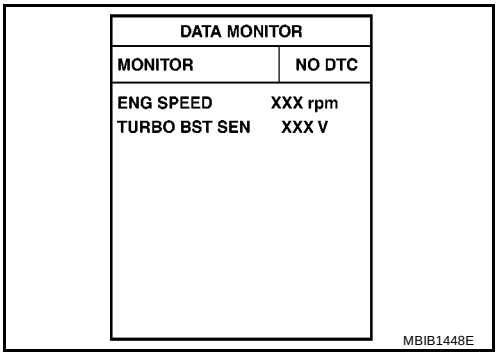

OK or NG

OK >> GO TO 25.

NG (More than the specified value)>>Replace manifold absolute pressure (MAP) sensor, and then GO TO 24.

24. CHECK INTAKE SYSTEM

Check for the cause of air suction at downstream of throttle body. Refer to the following.

- Disconnection looseness, or cracks of air duct
- Looseness of oil filler cap
- Disconnection of oil level gauge
- Open sticking, breakage, hose disconnection, or cracks of blow-by gas control valve
- Disconnection or cracks of EVAP canister purge hose, open sticking of EVAP canister purge volume control valve
- Malfunctioning sealing of rocker cover gasket
- Disconnection, looseness, or cracks of hoses, such as vacuum hose, connecting to intake air system parts.
- Malfunctioning sealing of intake air system, etc.

>> GO TO 31.

25. REPLACE ECM

1. Replace ECM.
2. Perform initialization of NATS system and registration of all NATS ignition key IDs.
   Refer to BL-218, "ECM Re-communicating Function" .
3. Perform EC-486, "Accelerator Pedal Released Position Learning" .
4. Perform EC-486, "Throttle Valve Closed Position Learning" .
5. Perform EC-486, "Idle Air Volume Learning" .

>> GO TO 31.

26. CHECK “TURBO BST SEN”

Select “TURBO BST SEN” in “DATA MONITOR” mode, and make sure that the indication is within the specified value as described below.

Idle: **Approximately 1.5V**

2,500 rpm: **Approximately 1.2V**

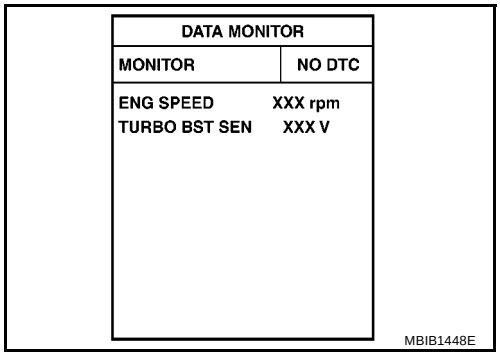

OK or NG

OK >> GO TO 31.

NG (More than the specified value)>>Replace manifold absolute pressure (MAP) sensor, and then GO TO 32.

27. CHECK INTAKE SYSTEM

Check for the cause of uneven air flow passing through throttle body. Refer to the following.

- Crushed air ducts
- Malfunctioning seal of air cleaner element
- Uneven dirt of air cleaner element
- Improper specification of intake air system

OK or NG

OK >> GO TO 29.

NG >> Repair or replace malfunctioning part, and then GO TO 28.

28. CHECK “B/FUEL SCHDL”

Select “B/FUEL SCHDL” in “DATA MONITOR (SPEC)” mode, and make sure that the indication is within the SP value.

OK or NG

OK >> **INSPECTION END**
NG (Less than the SP value)>>GO TO 29.

29. CHECK “TURBO BST SEN”

Select “TURBO BST SEN” in “DATA MONITOR” mode, and make sure that the indication is within the specified value as described below.

Idle: Approximately 1.5V

2,500 rpm: Approximately 1.2V

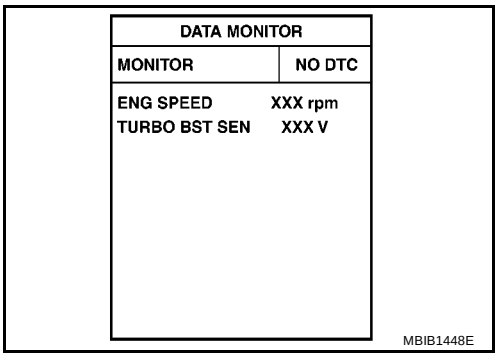

OK or NG

OK >> GO TO 30.
NG (Less than the specified value)>>Replace manifold absolute pressure (MAP) sensor, and then GO TO 32.

30. REPLACE ECM

1. Replace ECM.
2. Perform initialization of NATS system and registration of all NATS ignition key IDs.
   Refer to BL-218, "ECM Re-communicating Function" .
3. Perform EC-486, "Accelerator Pedal Released Position Learning" .
4. Perform EC-486, "Throttle Valve Closed Position Learning" .
5. Perform EC-486, "Idle Air Volume Learning" .

>> GO TO 32.

31. CHECK “A/F ALPHA-B1” AND “B/FUEL SCHDL”

Select “A/F ALPHA-B1” and “B/FUEL SCHDL” in “DATA MONITOR (SPEC)” mode, and make sure that the indication is within the SP value.

OK or NG

OK >> **INSPECTION END**
NG >> Detect malfunctioning part according to EC-499, "Symptom Matrix Chart" .

32. CHECK “B/FUEL SCHDL”

Select “B/FUEL SCHDL” in “DATA MONITOR (SPEC)” mode, and then make sure that the indication is within the SP value.

OK or NG

OK >> **INSPECTION END**
NG >> Detect malfunctioning part according to EC-499, "Symptom Matrix Chart" .

TROUBLE DIAGNOSIS FOR INTERMITTENT INCIDENT

PFP:00006

Description

BBS0035R

Intermittent incidents may occur. In many cases, the malfunction resolves itself (the part or circuit function returns to normal without intervention). It is important to realize that the symptoms described in the customer's complaint often do not recur on (1st trip) DTC visits. Realize also that the most frequent cause of intermittent incident occurrences is poor electrical connections. Because of this, the conditions under which the incident occurred may not be clear. Therefore, circuit checks made as part of the standard diagnostic procedure may not indicate the specific malfunctioning area.

Common Intermittent Incident Report Situations

STEP in Work Flow	Situation
2	The CONSULT-II is used. The SELF-DIAG RESULTS screen shows time data other than [0] or [1t].
3 or 4	The symptom described by the customer does not recur.
5	(1st trip) DTC does not appear during the DTC Confirmation Procedure.
10	The Diagnostic Procedure for PXXXX does not indicate the malfunctioning area.

Diagnostic Procedure

BBS0035S

1. INSPECTION START

Erase (1st trip) DTCs. Refer to EC-478, "HOW TO ERASE EMISSION-RELATED DIAGNOSTIC INFORMATION" .

>> GO TO 2.

2. CHECK GROUND TERMINALS

Check ground terminals for corroding or loose connection.
Refer to EC-EC-548, "Ground Inspection" .

OK or NG

OK >> GO TO 3.
NG >> Repair or replace.

3. SEARCH FOR ELECTRICAL INCIDENT

Perform GI-25, "How to Perform Efficient Diagnosis for an Electrical Incident" , “Incident Simulation Tests”.

OK or NG

OK >> **INSPECTION END**
NG >> Repair or replace.

POWER SUPPLY AND GROUND CIRCUIT

PFP:24110

Wiring Diagram

BBS0035T

EC-MAIN-01

: DETECTABLE LINE FOR DTC
: NON-DETECTABLE LINE FOR DTC

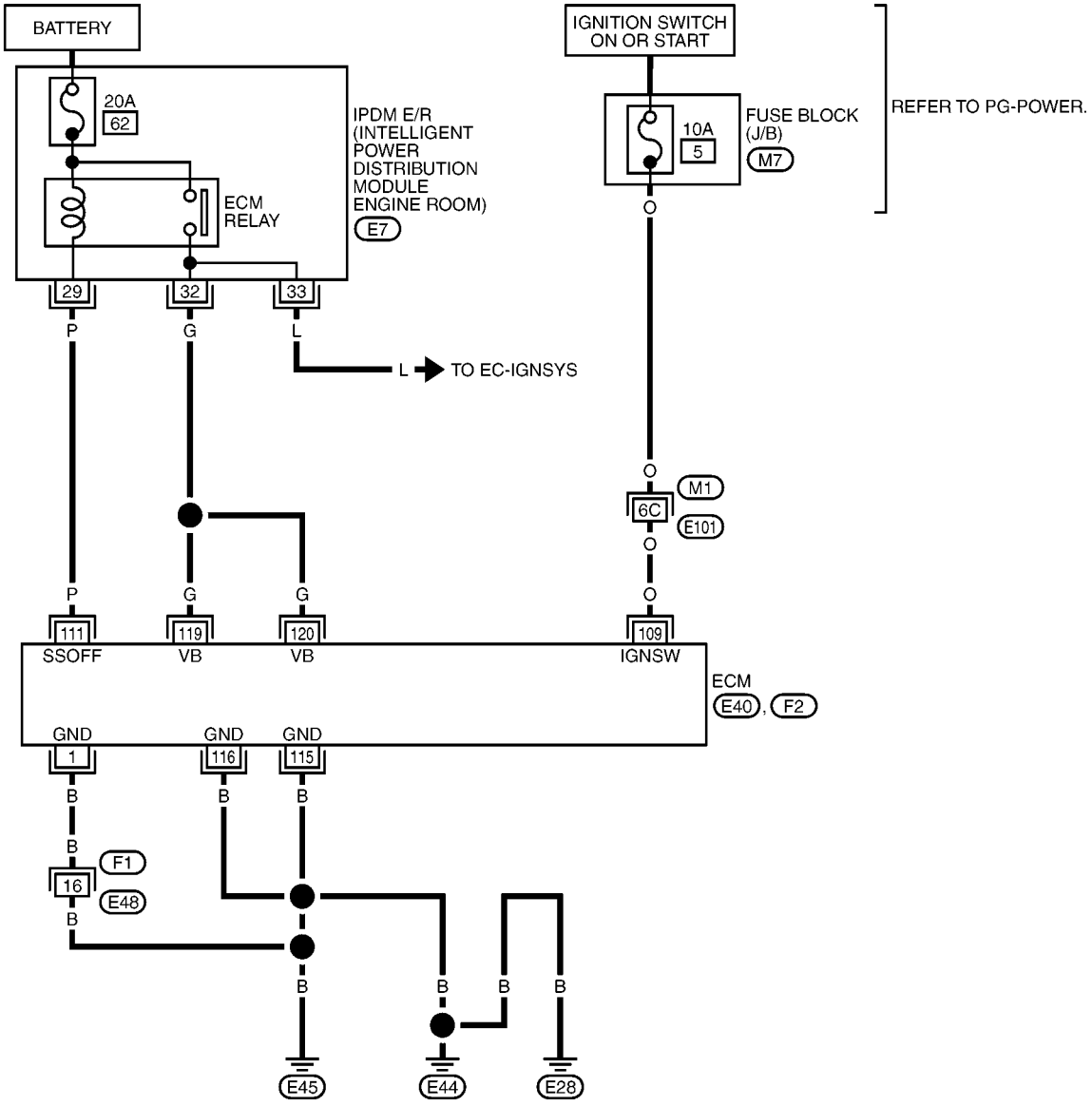

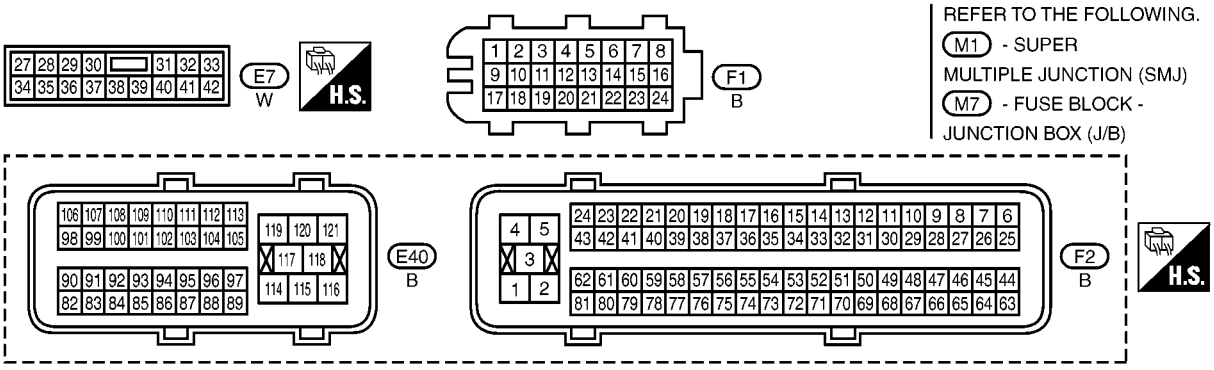

MBWA1502E

Specification data are reference values and are measured between each terminal and ground.

CAUTION:

Do not use ECM ground terminals when measuring input/output voltage. Doing so may result in damage to the ECM's transistor. Use a ground other than ECM terminals, such as the ground.

TERMINAL NO.	WIRE COLOR	ITEM	CONDITION	DATA (DC Voltage)
1 115 116	B B B	ECM ground	**[Engine is running]** ● Idle speed	Body ground
109	O	Ignition switch	**[Ignition switch: OFF]**	0V
			[Ignition switch: ON]	BATTERY VOLTAGE (11 - 14V)
111	P	ECM relay (Self shut-off)	**[Engine is running]** **[Ignition switch: OFF]** ● For a few seconds after turning ignition switch OFF	0 - 1.0V
			[Ignition switch: OFF] ● More than a few seconds passed after turning ignition switch OFF	BATTERY VOLTAGE (11 - 14V)
119 120	G G	Power supply for ECM	**[Ignition switch: ON]**	BATTERY VOLTAGE (11 - 14V)

Diagnostic Procedure

BBS0035U

1. INSPECTION START

Start engine.

Is engine running?

Yes or No

Yes >> GO TO 8.
No >> GO TO 2.

2. CHECK ECM POWER SUPPLY CIRCUIT-I

1. Turn ignition switch OFF and then ON.
2. Check voltage between ECM terminal 109 and ground with CONSULT-II or tester.

Voltage: Battery voltage

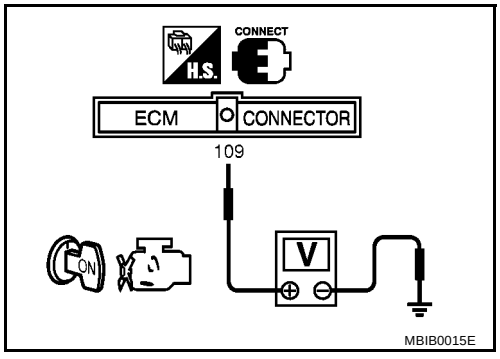

OK or NG

OK >> GO TO 4.
NG >> GO TO 3.

3. DETECT MALFUNCTIONING PART

Check the following.

- Harness connectors M1, E101
- Fuse block (J/B) connector M7
- 10A fuse
- Harness for open or short between ECM and fuse

>> Repair harness or connectors.

4. CHECK GROUND CONNECTIONS-I

1. Turn ignition switch OFF.
2. Loosen and retighten ground screws on the body. Refer to EC-548, "Ground Inspection" .

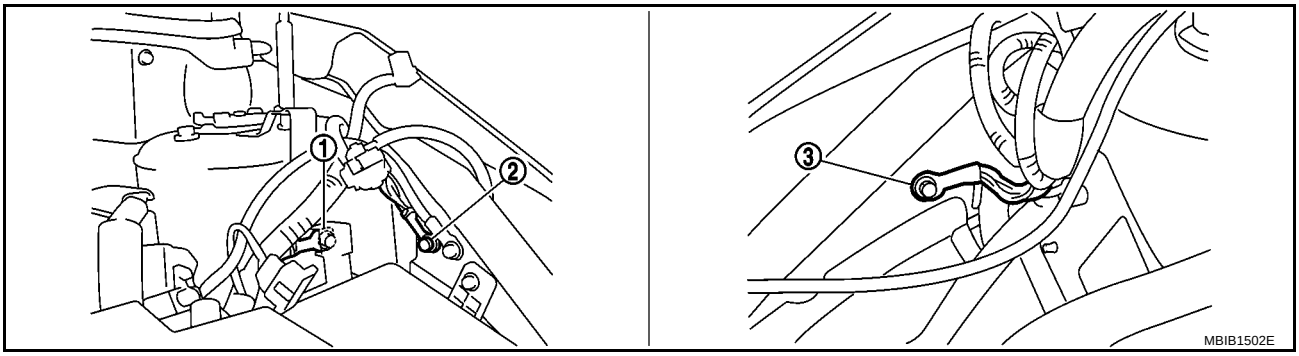

1. Body ground E44
2. Body ground E45
3. Body ground E28

OK or NG

OK >> GO TO 5.
NG >> Repair or replace ground connections.

5. CHECK ECM GROUND CIRCUIT FOR OPEN AND SHORT-I

1. Disconnect ECM harness connector.
2. Check harness continuity between ECM terminals 1, 115, 116 and ground.
   Refer to Wiring Diagram.

   Continuity should exist.

3. Also check harness for short to power.

OK or NG

OK >> GO TO 7.
NG >> GO TO 6.

6. DETECT MALFUNCTIONING PART

Check the following.

- Harness connectors F1, E48
- Harness for open or short between ECM and ground

>> Repair open circuit or short to power in harness or connectors.

7. CHECK ECM POWER SUPPLY CIRCUIT-II

1. Reconnect ECM harness connector.
2. Turn ignition switch ON.
3. Check voltage between IPDM E/R harness connector E7 terminal 33 and ground with CONSULT-II or tester.

   Voltage: Battery voltage

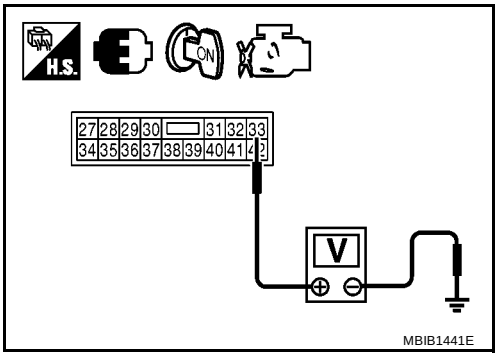

OK or NG

OK >> Go to EC-433, "IGNITION SIGNAL" .
NG >> GO TO 8.

8. CHECK ECM POWER SUPPLY CIRCUIT-III

1. Turn ignition switch ON and then OFF.
2. Check voltage between ECM terminals 119, 120 and ground with CONSULT-II or tester.

Voltage: After turning ignition switch OFF, battery voltage will exist for a few seconds, then drop approximately 0V.

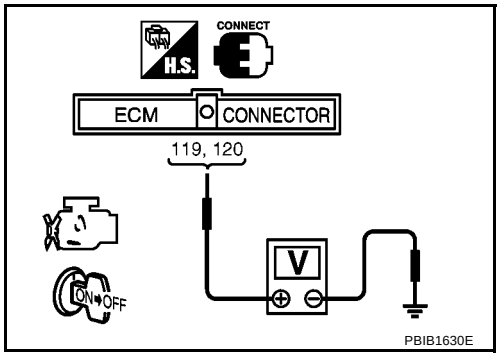

OK or NG

OK >> GO TO 13.
NG (Battery voltage does not exist.)>>GO TO 9.
NG (Battery voltage exists for more than a few seconds.)>>GO TO 11.

9. CHECK ECM POWER SUPPLY CIRCUIT-IV

1. Turn ignition switch OFF.
2. Check voltage between ECM terminal 111 and ground with CONSULT-II or tester.

Voltage: Battery voltage

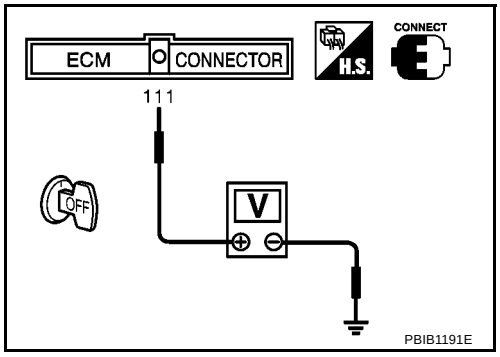

OK or NG

OK >> GO TO 10.
NG >> GO TO 11.

10. CHECK ECM POWER SUPPLY CIRCUIT-VI

1. Disconnect ECM harness connector.
2. Disconnect IPDM E/R harness connector.
3. Check harness continuity between ECM terminals 119, 120 and IPDM E/R terminal 32. Refer to Wiring Diagram.

Continuity should exist.

4. Also check harness for short to ground and short to power.

OK or NG

OK >> GO TO 13.
NG >> Repair open circuit or short to ground or short to power in harness or connectors.

11. CHECK ECM POWER SUPPLY CIRCUIT-VII

1. Disconnect ECM harness connector.
2. Disconnect IPDM E/R harness connector.
3. Check harness continuity between ECM terminal 111 and IPDM E/R terminal 29. Refer to Wiring Diagram.

Continuity should exist.

4. Also check harness for short to ground and short to power.

OK or NG

OK >> GO TO 12.
NG >> Repair open circuit or short to ground or short to power in harness or connectors.

12. CHECK 20A FUSE

1. Disconnect 20A fuse from IPDM E/R.
2. Check 20A fuse.

OK or NG

OK >> GO TO 16.
NG >> Replace 20A fuse.

13. CHECK GROUND CONNECTIONS-II

1. Loosen and retighten ground screws on the body. Refer to EC-548, "Ground Inspection" .

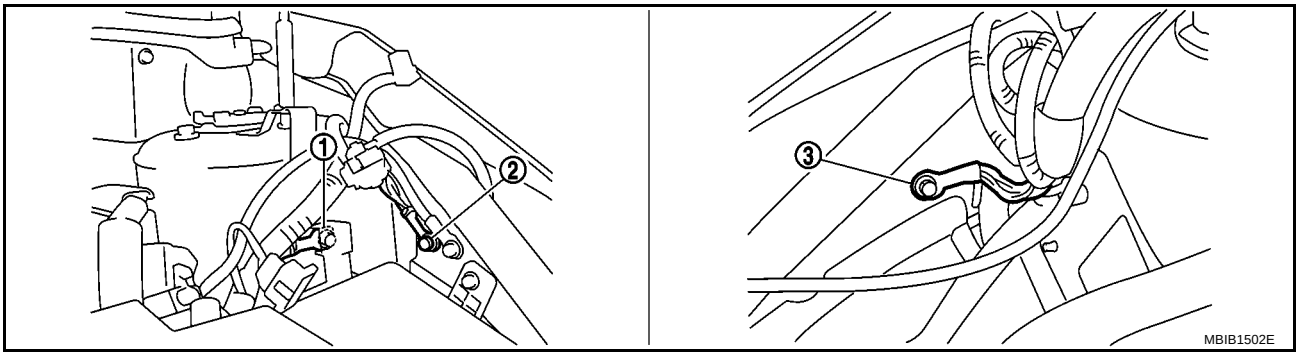

1. Body ground E44
2. Body ground E45
3. Body ground E28

OK or NG

OK >> GO TO 14.
NG >> Repair or replace ground connections.

14. CHECK ECM GROUND CIRCUIT FOR OPEN AND SHORT-II

1. Disconnect ECM harness connector.
2. Check harness continuity between ECM terminals 1, 115, 116 and ground.
   Refer to Wiring Diagram.

   Continuity should exist.

3. Also check harness for short to power.

OK or NG

OK >> GO TO 16.
NG >> GO TO 15.

15. DETECT MALFUNCTIONING PART

Check the following.

- Harness connectors F1, E48
- Harness for open or short between ECM and ground

>> Repair open circuit or short to power in harness or connectors.

16. CHECK INTERMITTENT INCIDENT

Refer to EC-542, "TROUBLE DIAGNOSIS FOR INTERMITTENT INCIDENT" .

OK or NG

OK >> Replace IPDM E/R. PG-18, "IPDM E/R (INTELLIGENT POWER DISTRIBUTION MODULE ENGINE ROOM)" .
NG >> Repair open circuit or short to power in harness or connectors.

Ground Inspection

BBS0035V

Ground connections are very important to the proper operation of electrical and electronic circuits. Ground connections are often exposed to moisture, dirt and other corrosive elements. The corrosion (rust) can become an unwanted resistance. This unwanted resistance can change the way a circuit works.
Electronically controlled circuits are very sensitive to proper grounding. A loose or corroded ground can drastically affect an electronically controlled circuit. A poor or corroded ground can easily affect the circuit. Even when the ground connection looks clean, there can be a thin film of rust on the surface.
When inspecting a ground connection follow these rules:

- Remove the ground bolt or screw.
- Inspect all mating surfaces for tarnish, dirt, rust, etc.
- Clean as required to assure good contact.
- Reinstall bolt or screw securely.
- Inspect for “add-on” accessories which may be interfering with the ground circuit.
- If several wires are crimped into one ground eyelet terminal, check for proper crimps. Make sure all of the wires are clean, securely fastened and providing a good ground path. If multiple wires are cased in one eyelet make sure no ground wires have excess wire insulation.

For detailed ground distribution information, refer to PG-38, "Ground Distribution" .

Ground Inspection

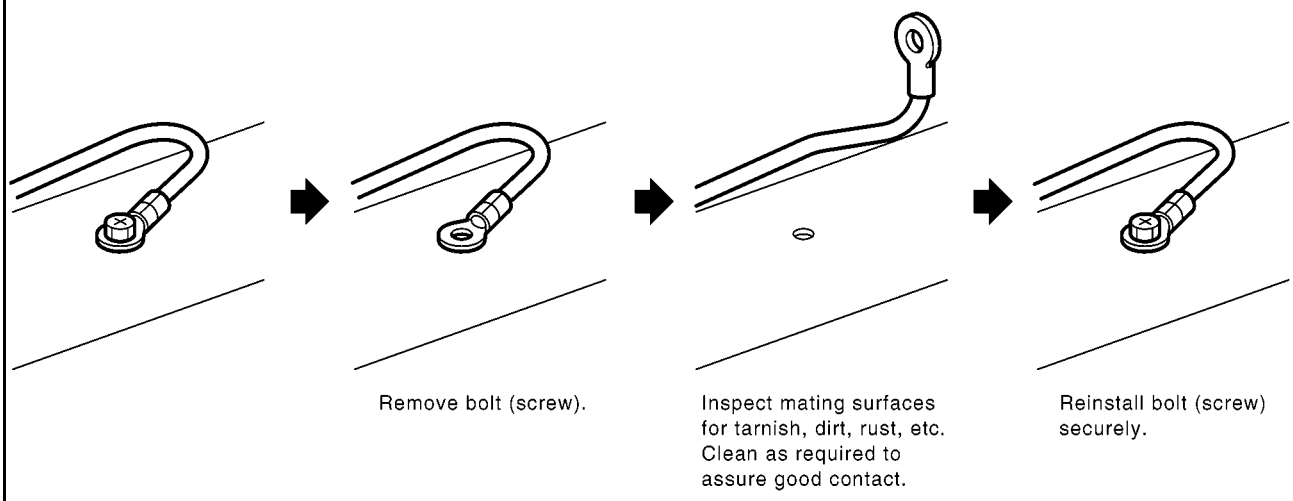

DTC U1001 CAN COMMUNICATION LINE

PFP:23710

Description

BBS0035W

CAN (Controller Area Network) is a serial communication line for real time application. It is an on-vehicle multiplex communication line with high data communication speed and excellent error detection ability. Many electronic control units are equipped onto a vehicle, and each control unit shares information and links with other control units during operation (not independent). In CAN communication, control units are connected with 2 communication lines (CAN H line, CAN L line) allowing a high rate of information transmission with less wiring. Each control unit transmits/receives data but selectively reads required data only.

On Board Diagnosis Logic

BBS0035X

The MI will not light up for these self-diagnoses.

DTC No.	Trouble diagnosis name	DTC detecting condition	Possible cause
U1001 1001	CAN communication line	● ECM cannot communicate to other control units. ● ECM cannot communicate for more than the specified time.	● Harness or connectors (CAN communication line is open or shorted.)

DTC Confirmation Procedure

BBS0035Y

1. Turn ignition switch ON and wait at least 3 seconds.
2. Select “DATA MONITOR” mode with CONSULT-II.
3. If 1st trip DTC is detected, go to EC-551, "Diagnostic Procedure" .

Wiring Diagram

BBS0035Z

EC-CAN-01

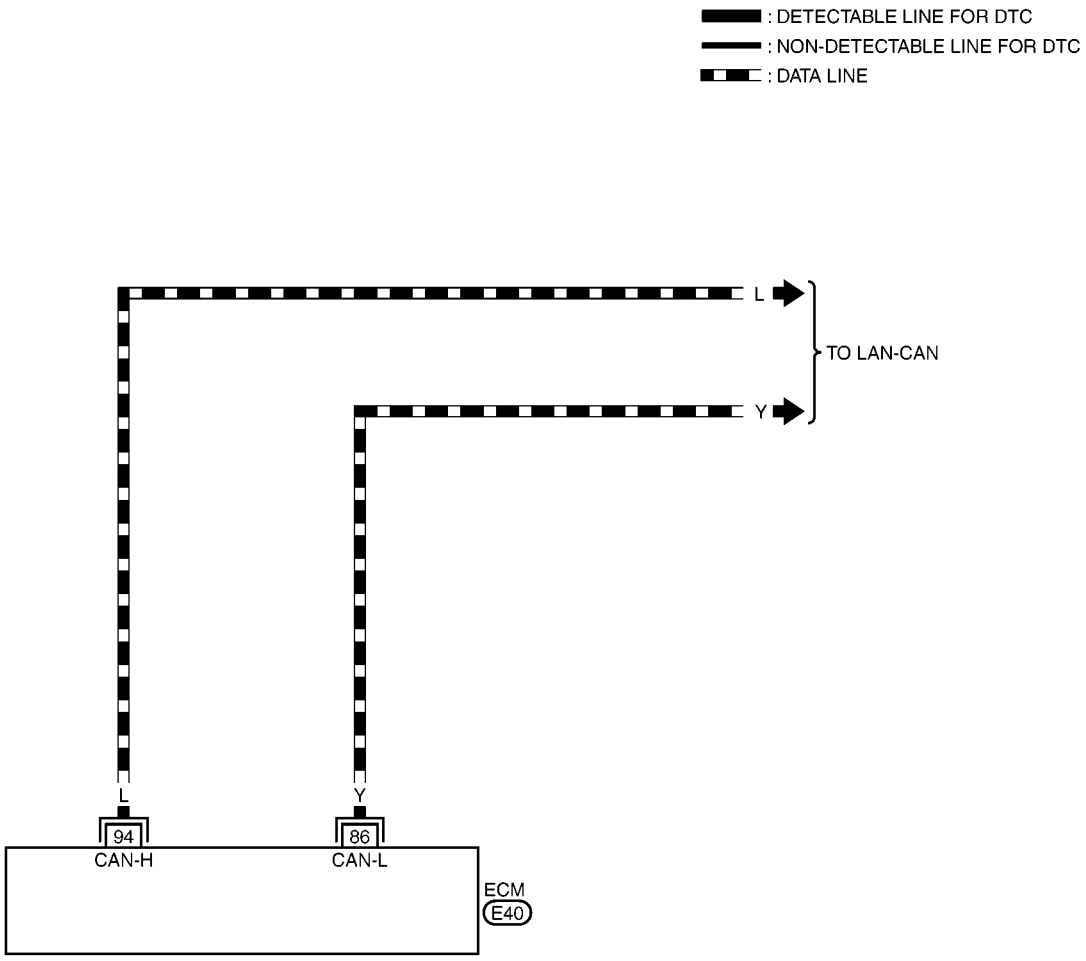

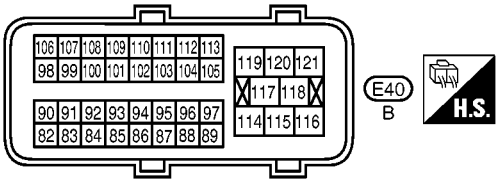

MBWA1503E

Diagnostic Procedure

BBS00360

Go to LAN-3, "Precautions When Using CONSULT-II" .

DTC U1010 CAN COMMUNICATION

PFP:23710

Description

BBS003ZM

CAN (Controller Area Network) is a serial communication line for real time application. It is an on-vehicle multiplex communication line with high data communication speed and excellent error detection ability. Many electronic control units are equipped onto a vehicle, and each control unit shares information and links with other control units during operation (not independent). In CAN communication, control units are connected with 2 communication lines (CAN H line, CAN L line) allowing a high rate of information transmission with less wiring. Each control unit transmits/receives data but selectively reads required data only.

On Board Diagnosis Logic

BBS003ZN

The MI will not light up for this diagnosis.

DTC No.	Trouble diagnosis name	DTC detecting condition	Possible cause
U1010 1010	CAN communication bus	Initializing CAN communication bus is malfunctioning.	● ECM

DTC Confirmation Procedure

BBS003ZO

WITH CONSULT-II

1. Turn ignition switch ON.
2. Select “DATA MONITOR” mode with CONSULT-II.
3. If 1st trip DTC is detected, go to EC-553, "Diagnostic Procedure" .

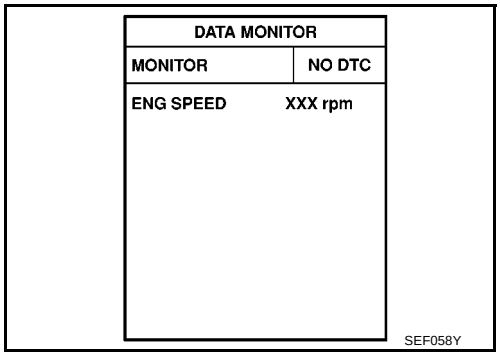

WITHOUT CONSULT-II

1. Turn ignition switch ON.
2. Turn ignition switch OFF, wait at least 10 seconds and then turn ON.
3. Perform Diagnostic Test Mode II (Self-diagnostic results) with ECM.
4. If 1st trip DTC is detected, go to EC-553, "Diagnostic Procedure" .

Diagnostic Procedure

BBS003ZP

1. INSPECTION START

With CONSULT-II

1. Turn ignition switch ON.
2. Select “SELF-DIAG RESULTS” mode with CONSULT-II.
3. Touch “ERASE”.
4. **Perform DTC Confirmation Procedure.**
   See EC-552, "DTC Confirmation Procedure" .
5. Is the DTC U1010 displayed again?

Without CONSULT-II

1. Turn ignition switch ON.
2. Erase the Diagnostic Test Mode II (Self-diagnostic results) memory. Refer to EC-481, "DIAGNOSTIC TEST MODE II — SELF-DIAGNOSTIC RESULTS" .
3. **Perform DTC Confirmation Procedure.**
   See EC-552, "DTC Confirmation Procedure" .
4. Is the DTC 1010 displayed again?

Yes or No

Yes >> GO TO 2.
No >> **INSPECTION END**

2. REPLACE ECM

1. Replace ECM.
2. Perform initialization of NATS system and registration of all NATS ignition key IDs. Refer to BL-218, "ECM Re-communicating Function" .
3. Perform EC-486, "Accelerator Pedal Released Position Learning" .
4. Perform EC-486, "Throttle Valve Closed Position Learning" .
5. Perform EC-486, "Idle Air Volume Learning" .

>> **INSPECTION END**

DTC P0011 IVT CONTROL

PFP:23796

Description

BBS00361

SYSTEM DESCRIPTION

Sensor	Input Signal to ECM	ECM Function	Actuator
Crankshaft position sensor (POS)	Engine speed and piston position	Intake valve timing control	Intake valve timing control solenoid valve
Camshaft position sensor (PHASE)			
Engine coolant temperature sensor	Engine coolant temperature		
Wheel sensor	Vehicle speed*		

*: This signal is sent to the ECM through CAN communication line.

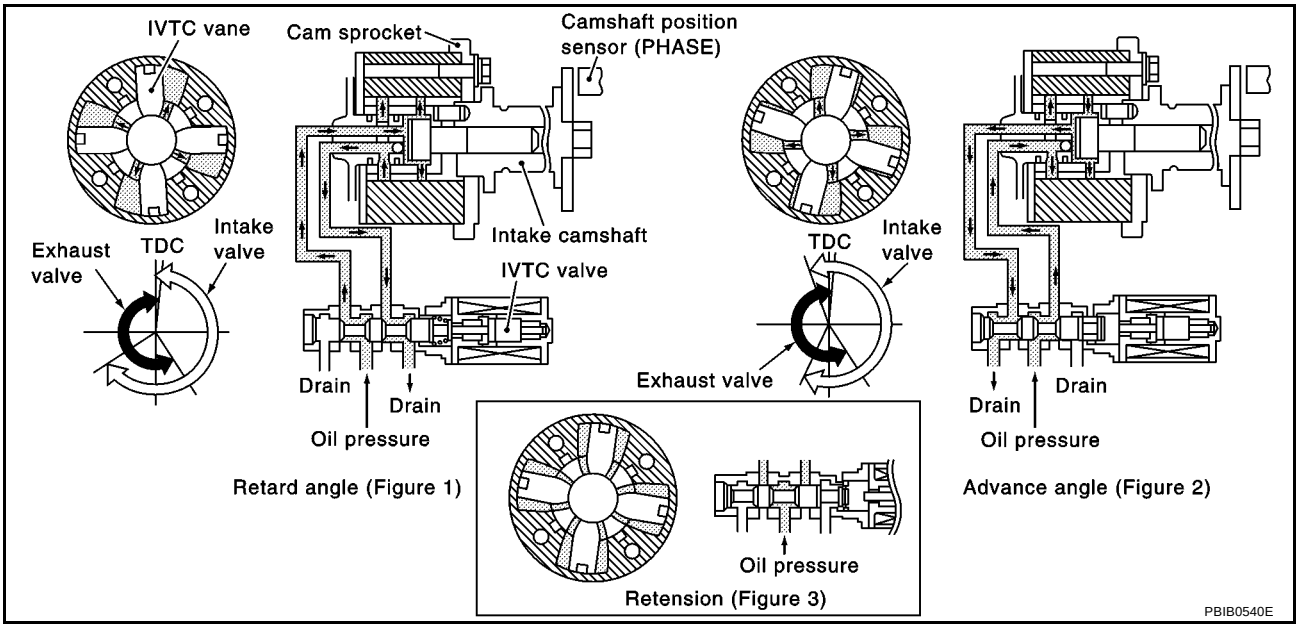

This mechanism hydraulically controls cam phases continuously with the fixed operating angle of the intake valve.

The ECM receives signals such as crankshaft position, camshaft position, engine speed, and engine coolant temperature. Then, the ECM sends ON/OFF pulse duty signals to the intake valve timing control solenoid valve depending on driving status. This makes it possible to control the shut/open timing of the intake valve to increase engine torque in low/mid speed range and output in high-speed range.

CONSULT-II Reference Value in Data Monitor Mode

BBS00362

Specification data are reference values.

MONITOR ITEM	CONDITION		SPECIFICATION
INT/V TIM (B1)	● Engine: After warming up ● Shift lever: Neutral ● Air conditioner switch: OFF ● No load	Idle	–5° - 5°CA
		2,000 rpm	Approx. 0° - 20°CA
INT/V SOL (B1)	● Engine: After warming up ● Shift lever: Neutral ● Air conditioner switch: OFF ● No load	Idle	0% - 2%
		2,000 rpm	Approx. 0% - 50%

On Board Diagnosis Logic

BBS00363

The MI will not light up for this self-diagnosis.

DTC No.	Trouble diagnosis name	Detecting condition	Possible cause
P0011 0011	Intake valve timing control performance	There is a gap between angle of target and phase-control angle degree.	● Crankshaft position sensor (POS) ● Camshaft position sensor (PHASE) ● Intake valve control solenoid valve ● Accumulation of debris to the signal pick-up portion of the camshaft ● Timing chain installation ● Foreign matter caught in the oil groove for intake valve timing control

FAIL-SAFE MODE

When the malfunction is detected, the ECM enters fail-safe mode.

Detected items	Engine operating condition in fail-safe mode
Intake valve timing control	The signal is not energized to the solenoid valve and the valve control does not function

DTC Confirmation Procedure

BBS00364

CAUTION:
Always drive at a safe speed.

NOTE:

- **If DTC P0011 is displayed with DTC P1111, first perform trouble diagnosis for DTC P1111. See EC-630 .**
- If DTC Confirmation Procedure has been previously conducted, always turn ignition switch OFF and wait at least 10 seconds before conducting the next test.

TESTING CONDITION:
Before performing the following procedure, confirm that battery voltage is between 10V and 16V at idle.

WITH CONSULT-II

1. Turn ignition switch ON and select “DATA MONITOR” mode with CONSULT-II.
2. Start engine and warm it up to the normal operating temperature.
3. Maintain the following conditions from at least 6 consecutive seconds
   Hold the accelerator pedal as steady as possible

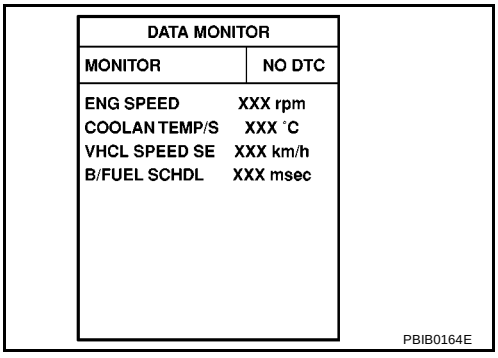

ENG SPEED	1,200 - 2,000 rpm (A constant rotation is maintained.)
COOLAN TEMP/S	60 - 120°C (140 - 248°F)
B/FUEL SCHDL	More than 3 msec
Shift lever	Neutral position

4. Let engine idle for 10 seconds.
5. If the 1st trip DTC is detected, go to EC-556, "Diagnostic Procedure" .
   If the 1st trip DTC is not detected, go to next step.
6. Maintain the following conditions for at least 20 consecutive seconds.

ENG SPEED	1,700 - 3,175 rpm (A constant rotation is maintained.)
COOLAN TEMP/S	70 - 105°C (176 - 194°F)
Shift lever	1st or 2nd position
Driving location uphill	Driving vehicle uphill (Increased engine load will help maintain the driving conditions required for this test.)

7. If 1st trip DTC is detected, go to EC-556, "Diagnostic Procedure" .

Overall Function Check

BBS00365

Use this procedure to check the overall function of the intake valve timing control system. During this check, a 1st trip DTC might not be confirmed.

WITHOUT CONSULT-II

1. Start engine and warm it up to normal operating temperature.
2. Turn ignition switch OFF and wait at least 10 seconds.
3. Turn ignition switch ON.
4. Set the tester probe between ECM terminal 62 (IVT control solenoid valve signal) and ground.
5. Start engine and let it idle.
6. Check the voltage under the following conditions.
   Verify that the oscilloscope screen shows the signal wave as shown below.

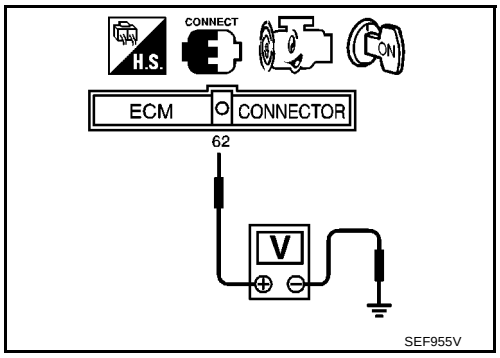

Conditions	Voltage
At idle	BATTERY VOLTAGE (11 - 14V)
2,000 rpm	Approximately 4V - BATTERY VOLTAGE(11 - 14V) ★ 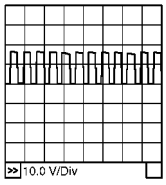 PBIB1790E

★: Average voltage for pulse signal (Actual pulse signal can be confirmed by oscilloscope.)

7. If NG, go to EC-556, "Diagnostic Procedure" .

Diagnostic Procedure

BBS00366

1. CHECK OIL PRESSURE WARNING LAMP

1. Start engine.
2. Check oil pressure warning lamp and confirm it is not illuminated.

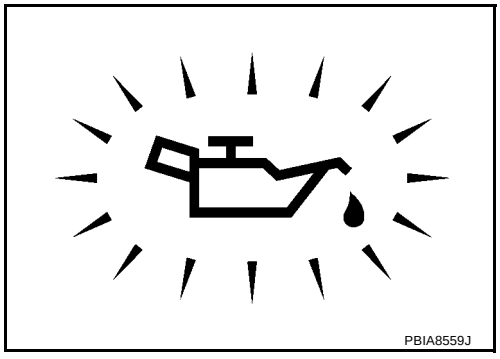

OK or NG

OK >> GO TO 2.
KG >> Go to LU-6, "OIL PRESSURE CHECK" .

2. CHECK INTAKE VALVE TIMING CONTROL SOLENOID VALVE

Refer to EC-557, "Component Inspection" .

OK or NG

OK >> GO TO 3.
NG >> Replace intake valve timing control solenoid valve.

3. CHECK CRANKSHAFT POSITION SENSOR (POS)

Refer to EC-615, "Component Inspection" .

OK or NG

OK >> GO TO 4.
NG >> Replace crankshaft position sensor (POS).

4. CHECK CAMSHAFT POSITION SENSOR (PHASE)

Refer to EC-622, "Component Inspection" .

OK or NG

OK >> GO TO 5.
NG >> Replace camshaft position sensor (PHASE).

5. CHECK CAMSHAFT (INTAKE)

Check the following.

- Accumulation of debris to the signal plate of camshaft rear end
- Chipping signal plate of camshaft rear end

OK or NG

OK >> GO TO 6.
NG >> Remove debris and clean the signal plate of camshaft rear end or replace camshaft.

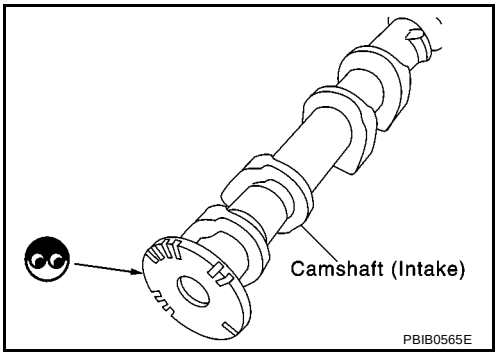

6. CHECK TIMING CHAIN INSTALLATION

Check service records for any recent repairs that may cause timing chain misaligned.
Are there any service records that may cause timing chain misaligned?

Yes or No

Yes >> Check timing chain installation. Refer to EM-50, "TIMING CHAIN" .
No >> GO TO 7.

7. CHECK LUBRICATION CIRCUIT

Refer to EM-47, "Inspection of Camshaft Sprocket (INT) Oil Groove" .

OK or NG

OK >> GO TO 8.
NG >> Clean lubrication line.

8. CHECK INTERMITTENT INCIDENT

Refer to EC-542, "TROUBLE DIAGNOSIS FOR INTERMITTENT INCIDENT" .
For Wiring Diagram, refer to EC-611 for CKP sensor (POS), EC-618 for CMP sensor (PHASE).

>> **INSPECTION END**

Component Inspection

BBS00367

INTAKE VALVE TIMING CONTROL SOLENOID VALVE

1. Disconnect intake valve timing control solenoid valve harness connector.

2. Check resistance between intake valve timing control solenoid valve as follows.

Terminal	Resistance
1 and 2	6.7 - 7.7Ω at 20°C (68°F)
1 or 2 and ground	∞Ω (Continuity should not exist.)

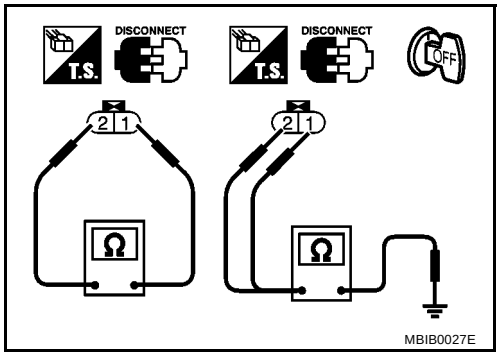

If NG, replace intake valve timing control solenoid valve.
If OK, go to next step.

3. Remove intake valve timing control solenoid valve.

4. Provide 12V DC between intake valve timing control solenoid valve terminals and then interrupt it. Make sure that the plunger moves as shown in the figure.

CAUTION:
Do not apply 12V DC continuously for 5 seconds or more. Doing so may result in damage to the coil in intake valve timing control solenoid valve.
If NG, replace intake valve timing control solenoid valve.

NOTE:
Always replace O-ring when intake valve timing control solenoid valve is removed.

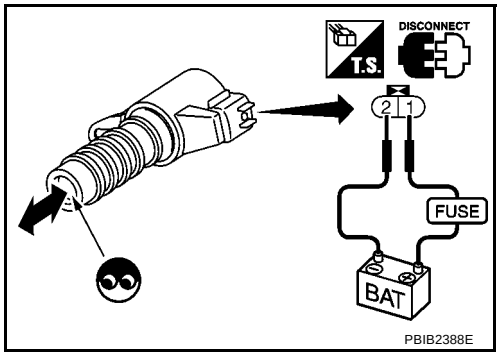

Removal and Installation

BBS00368

INTAKE VALVE TIMING CONTROL SOLENOID VALVE

Refer to EM-35, "ROCKER COVER" .

DTC P0107, P0108 MANIFOLD ABSOLUTE PRESSURE SENSOR

PFP:22365

Component Description

BBS00369

The manifold absolute pressure (MAP) sensor is placed intake manifold corrector. It detects intake manifold pressure and sends the voltage signal to the ECM, ECM uses the signal to compute intake air volume value.
The sensor uses a silicon diaphragm which is sensitive to the change in pressure. As the pressure increase, the voltage rises.

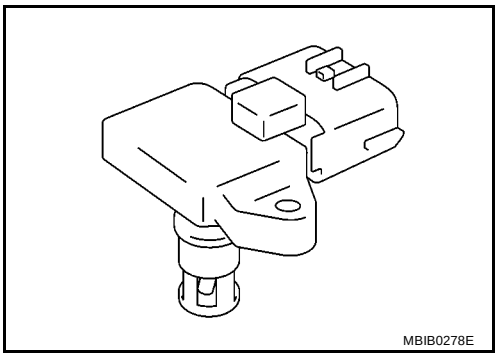

On Board Diagnosis Logic

BBS0036A

If DTC P0107 or P0108 is displayed with DTC P1229, first perform the trouble diagnosis for DTC P1229. Refer to EC-680, "DTC P1229 SENSOR POWER SUPPLY" .

DTC No.	Trouble diagnosis name	DTC detecting condition	Possible cause
P0107 0107	Manifold absolute pressure sensor circuit low input	An excessively low voltage from the sensor is sent to ECM.	● Harness or connectors (The sensor circuit is open or shorted.) ● Manifold absolute pressure sensor
P0108 0108	Manifold absolute pressure sensor circuit high input	An excessively high voltage from the sensor is sent to ECM.	● Harness or connectors (The sensor circuit is open or shorted) ● Manifold absolute pressure sensor ● Intake air leaks

FAIL-SAFE MODE

When the malfunction is detected, the ECM enters fail-safe mode.

Detected items	Engine operating condition in fail-safe mode
Manifold absolute pressure sensor circuit	Engine speed will not rise more than 2,500 rpm due to the fuel cut.

DTC Confirmation Procedure

BBS0036B

NOTE:
If DTC Confirmation Procedure has been previously conducted, always turn ignition switch OFF and wait at least 10 seconds before conducting the next test.

WITH CONSULT-II

1. Turn ignition switch ON.
2. Select “DATA MONITOR” mode with CONSULT-II.
3. Wait at least 5 seconds.
4. If 1st trip DTC is detected, go to EC-561, "Diagnostic Procedure" .

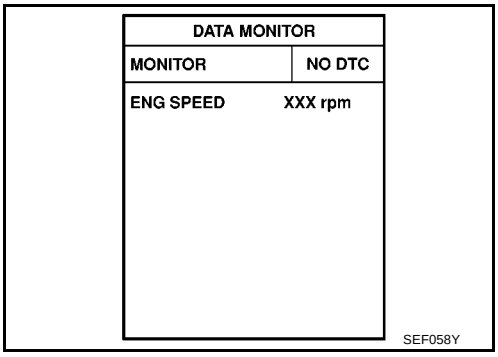

WITHOUT CONSULT-II

1. Turn ignition switch ON and wait at least 5 seconds.
2. Turn ignition switch OFF, wait at least 10 seconds and then turn ON.
3. Perform Diagnostic Test Mode II (Self-diagnostic results) with ECM.
4. If 1st trip DTC is detected, go to EC-561, "Diagnostic Procedure" .

Wiring Diagram

BBS0036C

EC-AP/SEN-01

: DETECTABLE LINE FOR DTC
: NON-DETECTABLE LINE FOR DTC

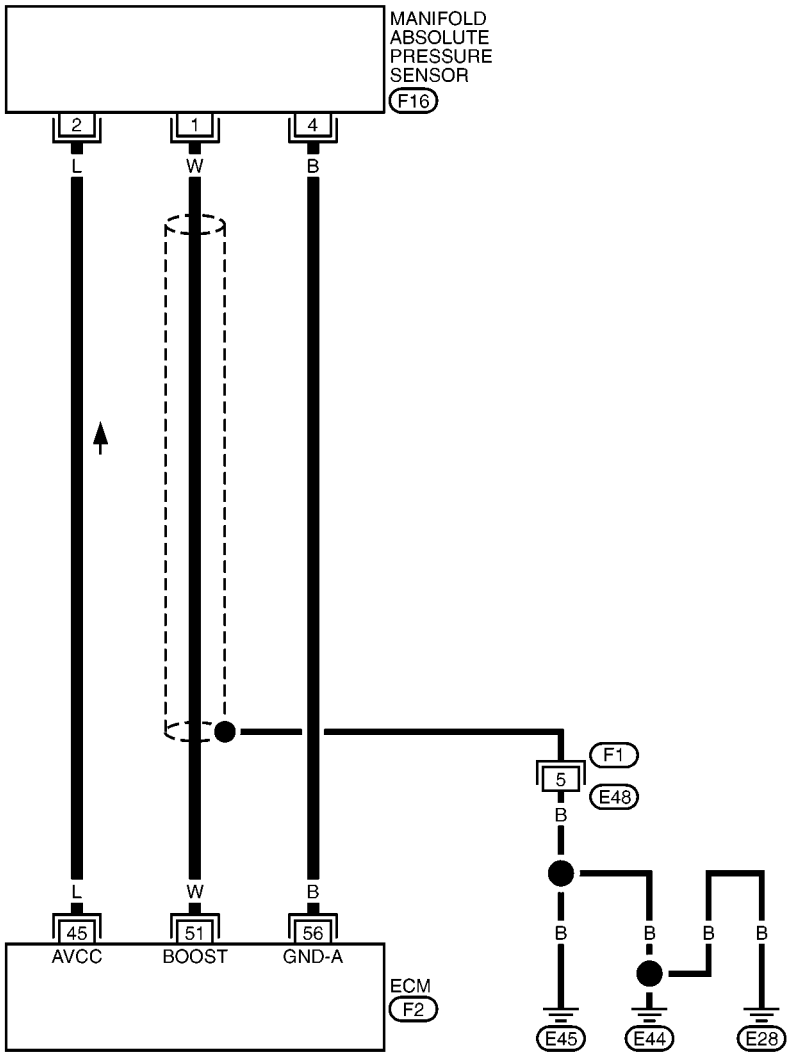

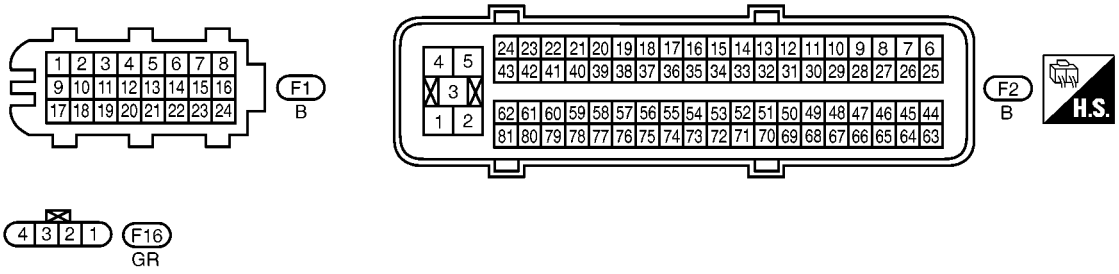

MBWA1506E

Specification data are reference values and are measured between each terminal and ground.

CAUTION:

Do not use ECM ground terminals when measuring input/output voltage. Doing so may result in damage to the ECM's transistor. Use a ground other than ECM terminals, such as the ground.

TERMINAL NO.	WIRE COLOR	ITEM	CONDITION	DATA (DC Voltage)
45	L	Sensor power supply	**[Ignition switch: ON]**	Approximately 5V
51	W	Manifold absolute pressure sensor	**[Engine is running]** ● **Warm-up condition** ● Idle speed	Approximately 1.5V
			[Engine is running] ● **Warm-up condition** ● Engine speed: 2,000 rpm	Approximately 1.2V
56	B	Sensor ground (Manifold absolute pressure sensor)	**[Engine is running]** ● **Warm-up condition** ● Idle speed	Approximately 0V

Diagnostic Procedure

BBS0036D

1. INSPECTION START

Which malfunction (P0107 or P0108) is duplicated?

P0107 or P0108

P0107 >> GO TO 3.
P0108 >> GO TO 2.

2. CHECK INTAKE SYSTEM

Check the following for connection.

- Air duct
- Vacuum hoses
- Intake air passage between air duct and intake manifold

OK or NG

OK >> GO TO 3.
NG >> Reconnect the parts.

3. CHECK GROUND CONNECTIONS

1. Turn ignition switch OFF.
2. Loosen and retighten ground screws on the body.
   Refer to EC-548, "Ground Inspection" .

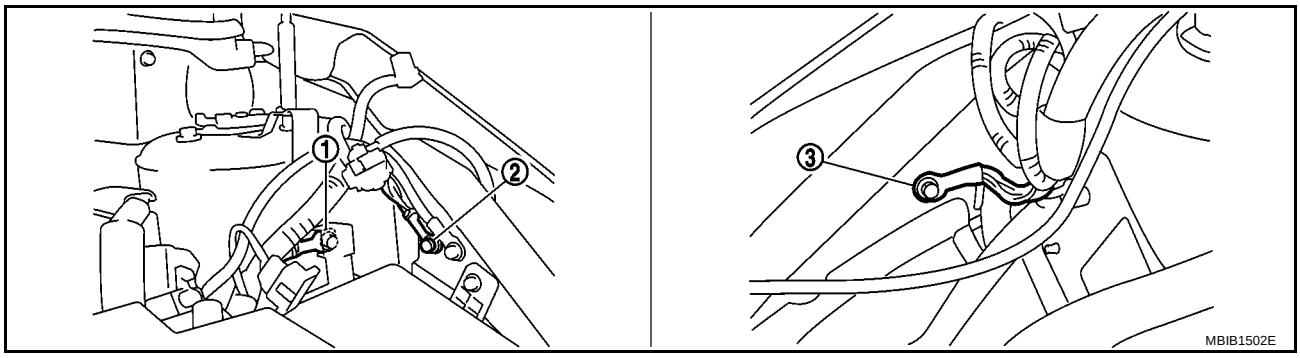

1. Body ground E44
2. Body ground E45
3. Body ground E28

OK or NG

OK >> GO TO 4.
NG >> Repair or replace ground connections.

4. CHECK MAP SENSOR POWER SUPPLY CIRCUIT

1. Disconnect manifold absolute pressure (MAP) sensor harness connector.
2. Turn ignition switch ON.

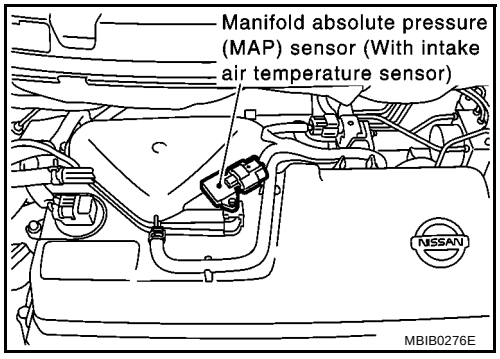

3. Check voltage between MAP sensor terminal 2 and ground with CONSULT-II or tester.

   Voltage: Approximately 5V

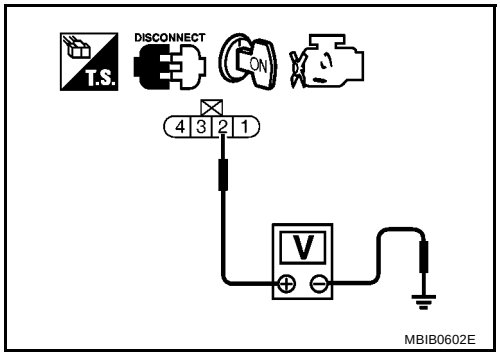

OK or NG

OK >> GO TO 5.
NG >> Repair harness or connectors.

5. CHECK MAP SENSOR GROUND CIRCUIT FOR OPEN AND SHORT

1. Turn ignition switch OFF.
2. Disconnect ECM harness connector.
3. Check harness continuity between MAP sensor terminal 4 and ECM terminal 56
   Refer to Wiring Diagram.

   Continuity should exist.

4. Also check harness for short to ground and short to power.

OK or NG

OK >> GO TO 6.
NG >> Repair open circuit or short to ground or short to power in harness or connectors.

6. CHECK MAP SENSOR INPUT SIGNAL CIRCUIT FOR OPEN AND SHORT

1. Check harness continuity between MAP sensor terminal 1 and ECM terminal 51.
   Refer to Wiring Diagram

   Continuity should exist.

2. Also check harness for short to ground and short to power.

OK or NG

OK >> GO TO 7.
NG >> Repair open circuit or short to ground or short to power in harness or connectors.

7. CHECK MAP SENSOR

Refer to EC-563, "Component Inspection" .

OK or NG

OK >> GO TO 8.
NG >> Replace manifold absolute pressure sensor.

8. CHECK INTERMITTENT INCIDENT

Refer to EC-542, "TROUBLE DIAGNOSIS FOR INTERMITTENT INCIDENT" .

>> **INSPECTION END**

Component Inspection

BBS0036E

MANIFOLD ABSOLUTE PRESSURE SENSOR

1. Reconnect all harness connectors disconnected.
2. Start engine and warm it up to normal operating temperature.
3. Turn ignition switch OFF, wait at least 5 seconds and then turn ON.
4. Check voltage between ECM terminal 51 (manifold absolute pressure sensor signal) and ground.

   NOTE:
   - To avoid the affection of intake manifold vacuum, check the voltage 1 or more minutes past after engine is stopped.
   - Because the sensor is absolute pressure sensor, output value may differ depends on atmospheric pressure and altitude.

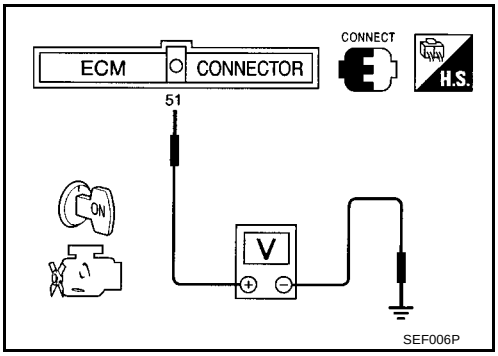

5. Measure the atmospheric pressure.

   NOTE:
   As atmospheric pressure describe on synoptic chart is value at sea level, please compensate the actual pressure with the following chart.

Altitude	Compensated pressure
0m	0hPa
200m	-24hPa
400m	-47hPa
600m	-70hPa
800m	-92hPa
1,000m	-114hPa
1,500m	-168hPa
2,000m	-218hPa

6. Check the manifold absolute pressure sensor value corresponds to the atmospheric pressure.

Atmospheric pressure	Voltage
800hPa	3.2 - 3.6V
850hPa	3.4 - 3.8V
900hPa	3.7 - 4.1V
960hPa	3.9 - 4.3V
1,000hPa	4.1 - 4.5V
1,050hPa	4.3 - 4.7V

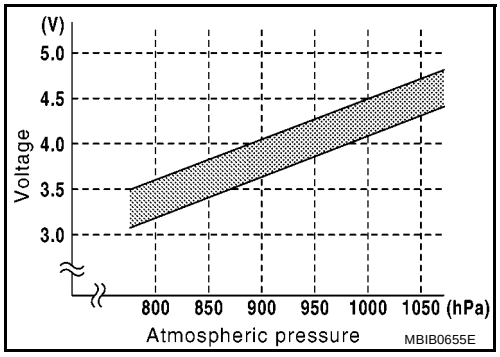

7. Start engine and let it idle.

8. Check the voltage between ECM terminal 51 and ground at idling and confirm the voltage difference between engine is stopped and at idling is within following chart.

Intake manifold vacuum	Voltage difference
-40kPa (-300mmHg)	1.6 - 2.0V
-53.3kPa (-400mmHg)	2.2 - 2.6V
-66.7kPa (-500mm)	2.8 - 3.2V
-80kPa (-600mmHg)	3.4 - 3.8V

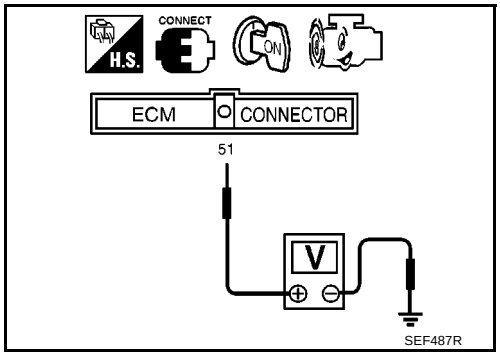

BBS0036F

Removal and Installation

MANIFOLD ABSOLUTE PRESSURE SENSOR

Refer to EM-18, "AIR CLEANER AND AIR DUCT" .

DTC P0117, P0118 ECT SENSOR

PFP:22630

Component Description

BBS0036G

The engine coolant temperature sensor is used to detect the engine coolant temperature. The sensor modifies a voltage signal from the ECM. The modified signal returns to the ECM as the engine coolant temperature input. The sensor uses a thermistor which is sensitive to the change in temperature. The electrical resistance of the thermistor decreases as temperature increases.

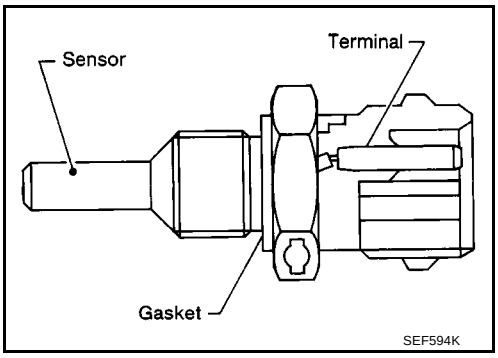

<Reference data>

Engine coolant temperature °C (°F)	Voltage* V	Resistance kΩ
–10 (14)	4.4	7.0 - 11.4
20 (68)	3.5	2.1 - 2.9
50 (122)	2.2	0.68 - 1.00
90 (194)	0.9	0.236 - 0.260

*: This data is reference value and is measured between ECM terminal 72 (Engine coolant temperature sensor) and ground.

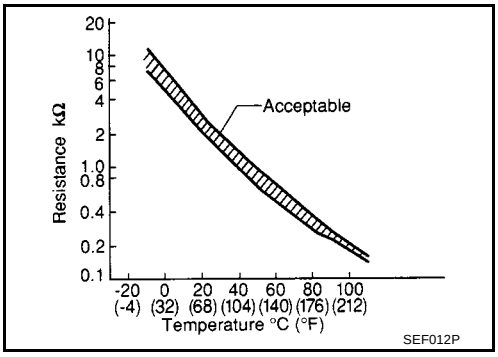

CAUTION:

Do not use ECM ground terminals when measuring input/output voltage. Doing so may result in damage to the ECM's transistor. Use a ground other than ECM terminals, such as the ground.

On Board Diagnosis Logic

BBS0036H

DTC No.	Trouble Diagnosis Name	DTC Detecting Condition	Possible Cause
P0117 0117	Engine coolant temperature sensor circuit low input	An excessively low voltage from the sensor is sent to ECM.	● Harness or connectors (The sensor circuit is open or shorted.) ● Engine coolant temperature sensor
P0118 0118	Engine coolant temperature sensor circuit high input	An excessively high voltage from the sensor is sent to ECM.	

FAIL-SAFE MODE

When the malfunction is detected, the ECM enters fail-safe mode.

Detected items	Engine operating condition in fail-safe mode	
Engine coolant temperature sensor circuit	Engine coolant temperature will be determined by ECM based on the time after turning ignition switch ON or START. CONSULT-II displays the engine coolant temperature decided by ECM.	
	Condition	Engine coolant temperature decided (CONSULT-II display)
	Just as ignition switch is turned ON or START	40°C (104°F)
	More than approx. 4 minutes after ignition ON or START	80°C (176°F)
	Except as shown above	40 - 80°C (104 - 176°F) (Depends on the time)
	When the fail-safe system for engine coolant temperature sensor is activated, the cooling fan operates while engine is running.	

DTC Confirmation Procedure

BBS0036I

NOTE:
If DTC Confirmation Procedure has been previously conducted, always turn ignition switch OFF and wait at least 10 seconds before conducting the next test.

WITH CONSULT-II

1. Turn ignition switch ON.
2. Select “DATA MONITOR” mode with CONSULT-II.
3. Wait at least 5 seconds.
4. If 1st trip DTC is detected, go to EC-568, "Diagnostic Procedure" .

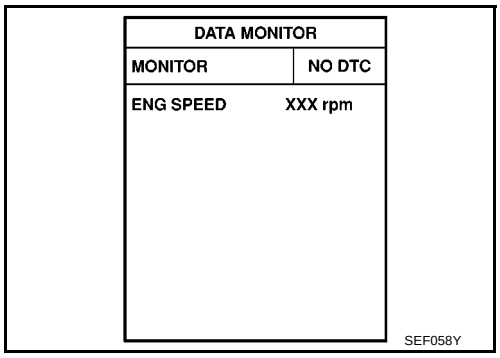

WITHOUT CONSULT-II

1. Turn ignition switch ON and wait at least 5 seconds.
2. Turn ignition switch OFF, wait at least 10 seconds and then turn ON.
3. Perform Diagnostic Test Mode II (Self-diagnostic results) with ECM.
4. If 1st trip DTC is detected, go to EC-568, "Diagnostic Procedure" .

Wiring Diagram

BBS0036J

EC-ECTS-01

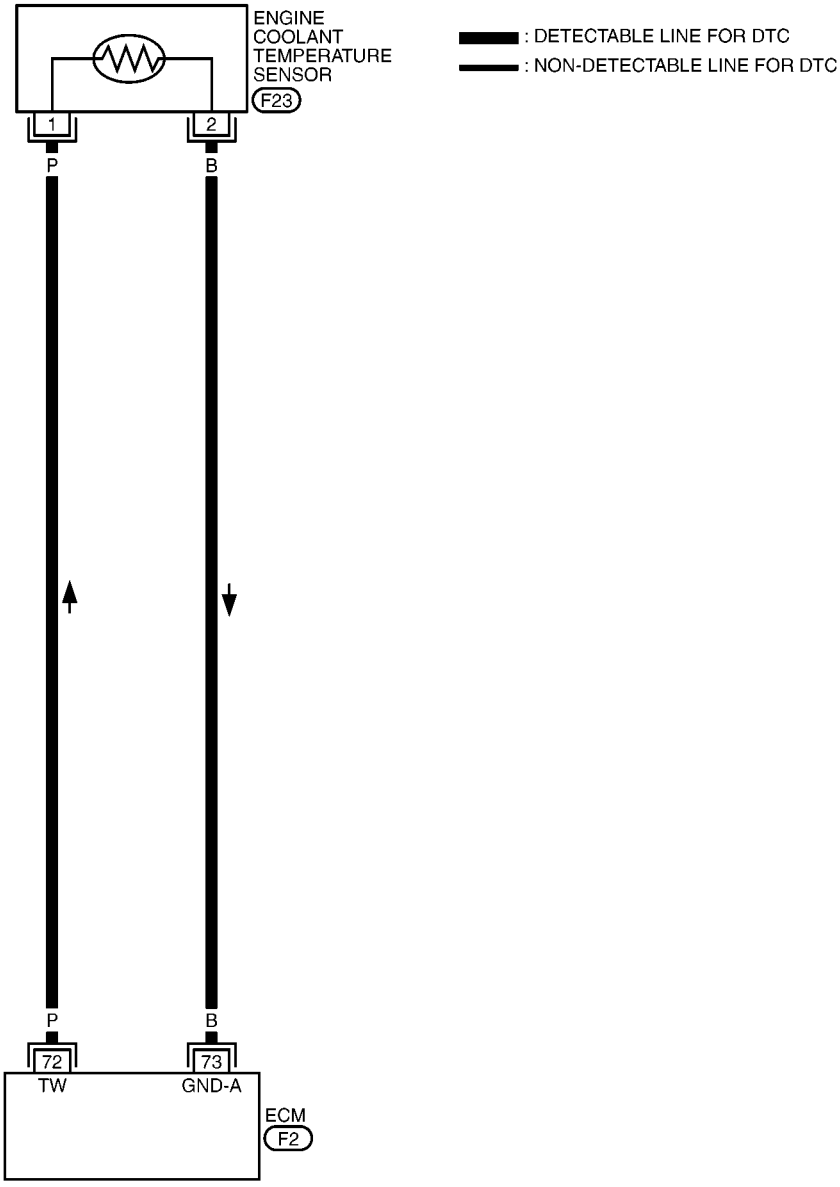

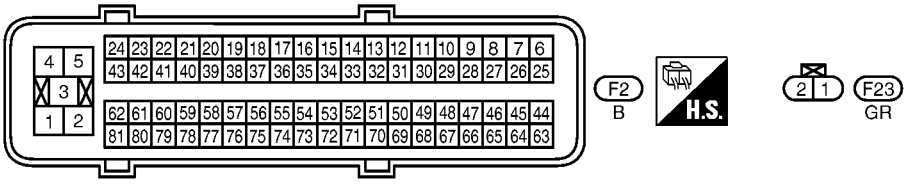

MBWA1508E

Diagnostic Procedure

BBS0036K

1. CHECK GROUND CONNECTIONS

1. Turn ignition switch OFF.
2. Loosen and retighten ground screws on the body.
   Refer to EC-548, "Ground Inspection" .

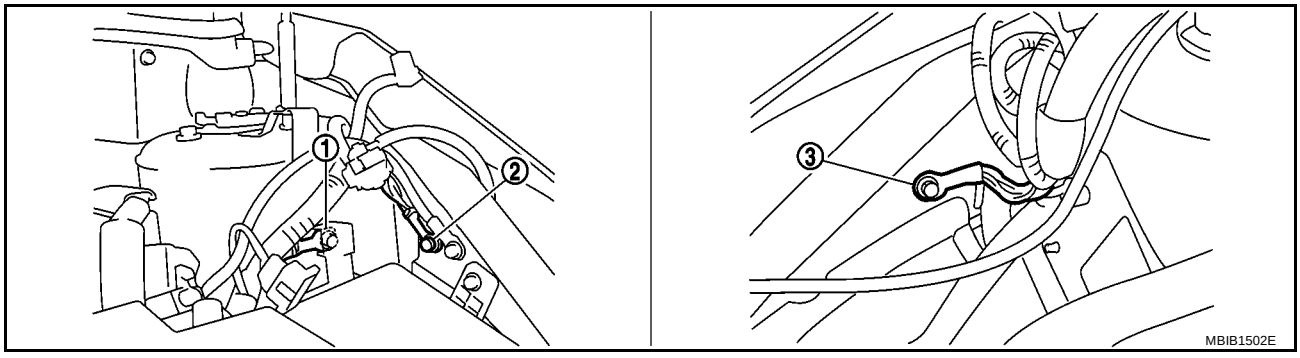

1. Body ground E44
2. Body ground E45
3. Body ground E28

OK or NG

OK >> GO TO 2.
NG >> Repair or replace ground connections.

2. CHECK ECT SENSOR POWER SUPPLY CIRCUIT

1. Disconnect engine coolant temperature (ECT) sensor harness connector.
2. Turn ignition switch ON.

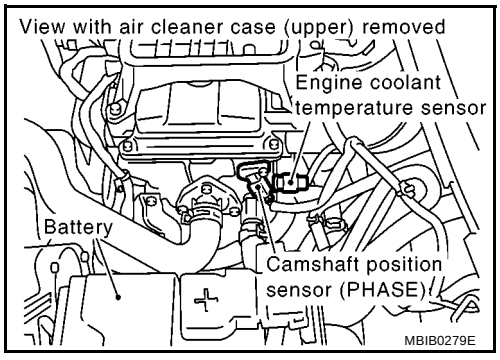

3. Check voltage between ECT sensor terminal 1 and ground with CONSULT-II or tester.

   Voltage: Approximately 5V

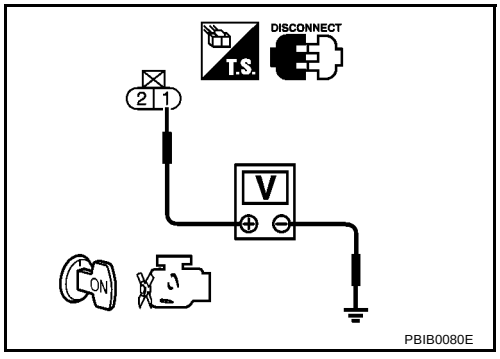

OK or NG

OK >> GO TO 3.
NG >> Repair open circuit or short to ground or short to power in harness or connectors.

3. CHECK ECT SENSOR GROUND CIRCUIT FOR OPEN AND SHORT

1. Turn ignition switch OFF.
2. Disconnect ECM harness connector.
3. Check harness continuity between ECT sensor terminal 2 and ECM terminal 73.
   Refer to Wiring Diagram.

   Continuity should exist.

4. Also check harness for short to ground and short to power.

OK or NG

OK >> GO TO 4.
NG >> Repair open circuit or short to ground or short to power in harness or connectors.

4. CHECK ENGINE COOLANT TEMPERATURE SENSOR

Refer to EC-569, "Component Inspection" .

OK or NG

OK >> GO TO 5.
NG >> Replace engine coolant temperature sensor.

5. CHECK INTERMITTENT INCIDENT

Refer to EC-542, "TROUBLE DIAGNOSIS FOR INTERMITTENT INCIDENT" .

>> **INSPECTION END**

Component Inspection

BBS0036L

ENGINE COOLANT TEMPERATURE SENSOR

1. Check resistance between engine coolant temperature sensor terminals 1 and 2 as shown in the figure.

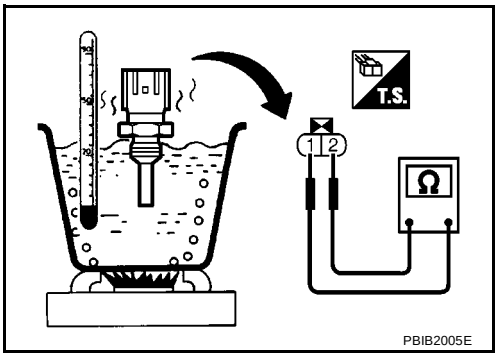

<Reference data>

Engine coolant temperature °C (°F)	Resistance kΩ
20 (68)	2.1 - 2.9
50 (122)	0.68 - 1.00
90 (194)	0.236 - 0.260

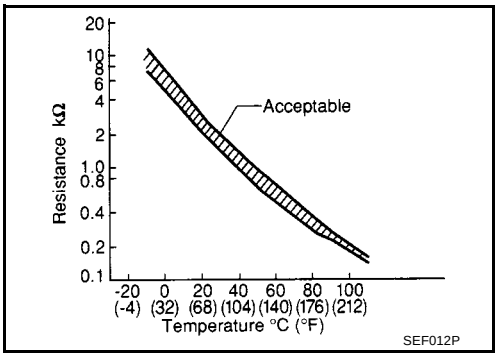

2. If NG, replace engine coolant temperature sensor.

Removal and Installation

BBS0036M

ENGINE COOLANT TEMPERATURE SENSOR

Refer to CO-19, "THERMOSTAT" .

DTC P0122, P0123 TP SENSOR

PFP:16119

Component Description

BBS0036N

Electric throttle control actuator consists of throttle control motor, throttle position sensor, etc. The throttle position sensor responds to the throttle valve movement.
The throttle position sensor has the two sensors. These sensors are a kind of potentiometers which transform the throttle valve position into output voltage, and emit the voltage signal to the ECM. In addition, these sensors detect the opening and closing speed of the throttle valve and feed the voltage signals to the ECM. The ECM judges the current opening angle of the throttle valve from these signals and the ECM controls the throttle control motor to make the throttle valve opening angle properly in response to driving condition.

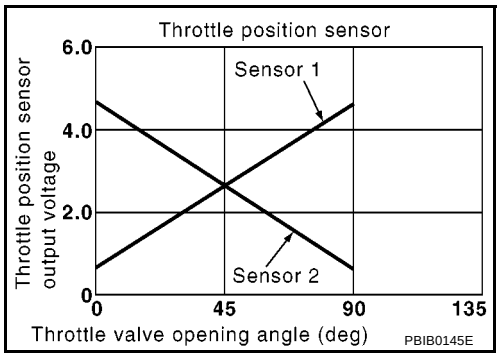

CONSULT-II Reference Value in Data Monitor Mode

BBS0036O

Specification data are reference values.

MONITOR ITEM	CONDITION		SPECIFICATION
THRTL SEN 1 THRTL SEN 2*	● Ignition switch: ON (Engine stopped)	Accelerator pedal: Fully released	More than 0.36V
	● Shift lever: 1st	Accelerator pedal: Fully depressed	Less than 4.75V

*: Throttle position sensor 2 signal is converted by ECM internally. Thus, it differs from ECM terminal voltage signal.

On Board Diagnosis Logic

BBS0036P

These self-diagnoses have the one trip detection logic.

DTC No.	Trouble diagnosis name	DTC detecting condition	Possible cause
P0122 0122	Throttle position sensor 2 circuit low input	An excessively low voltage from the TP sensor 2 is sent to ECM.	● Harness or connectors (TP sensor 2 circuit is open or shorted.) (APP sensor 2 circuit is shorted.) ● Electric throttle control actuator (TP sensor 2) ● Accelerator pedal position sensor (APP sensor 2)
P0123 0123	Throttle position sensor 2 circuit high input	An excessively high voltage from the TP sensor 2 is sent to ECM.	

FAIL-SAFE MODE

When the malfunction is detected, the ECM enters fail-safe mode and the MI lights up.

Engine operation condition in fail-safe mode
The ECM controls the electric throttle control actuator in regulating the throttle opening in order for the idle position to be within +10 degrees. The ECM regulates the opening speed of the throttle valve to be slower than the normal condition. So, the acceleration will be poor.

DTC Confirmation Procedure

BBS0036Q

NOTE:
If DTC Confirmation Procedure has been previously conducted, always turn ignition switch OFF and wait at least 10 seconds before conducting the next test.
TESTING CONDITION:
Before performing the following procedure, confirm that battery voltage is more than 10V at idle.

WITH CONSULT-II

1. Turn ignition switch ON.
2. Select “DATA MONITOR” mode with CONSULT-II.
3. Start engine and let it idle for 1 second.
4. If DTC is detected, go to EC-573, "Diagnostic Procedure" .

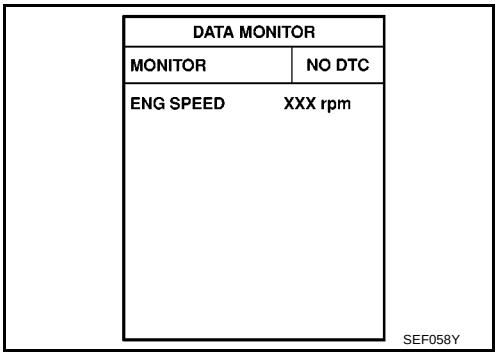

WITHOUT CONSULT-II

1. Start engine and let it idle for 1 second.
2. Turn ignition switch OFF, wait at least 10 seconds and then turn ON.
3. Perform Diagnostic Test Mode II (Self-diagnostic results) with ECM.
4. If DTC is detected, go to EC-573, "Diagnostic Procedure" .

Wiring Diagram

BBS0036R

EC-TPS2-01

: DETECTABLE LINE FOR DTC
: NON-DETECTABLE LINE FOR DTC

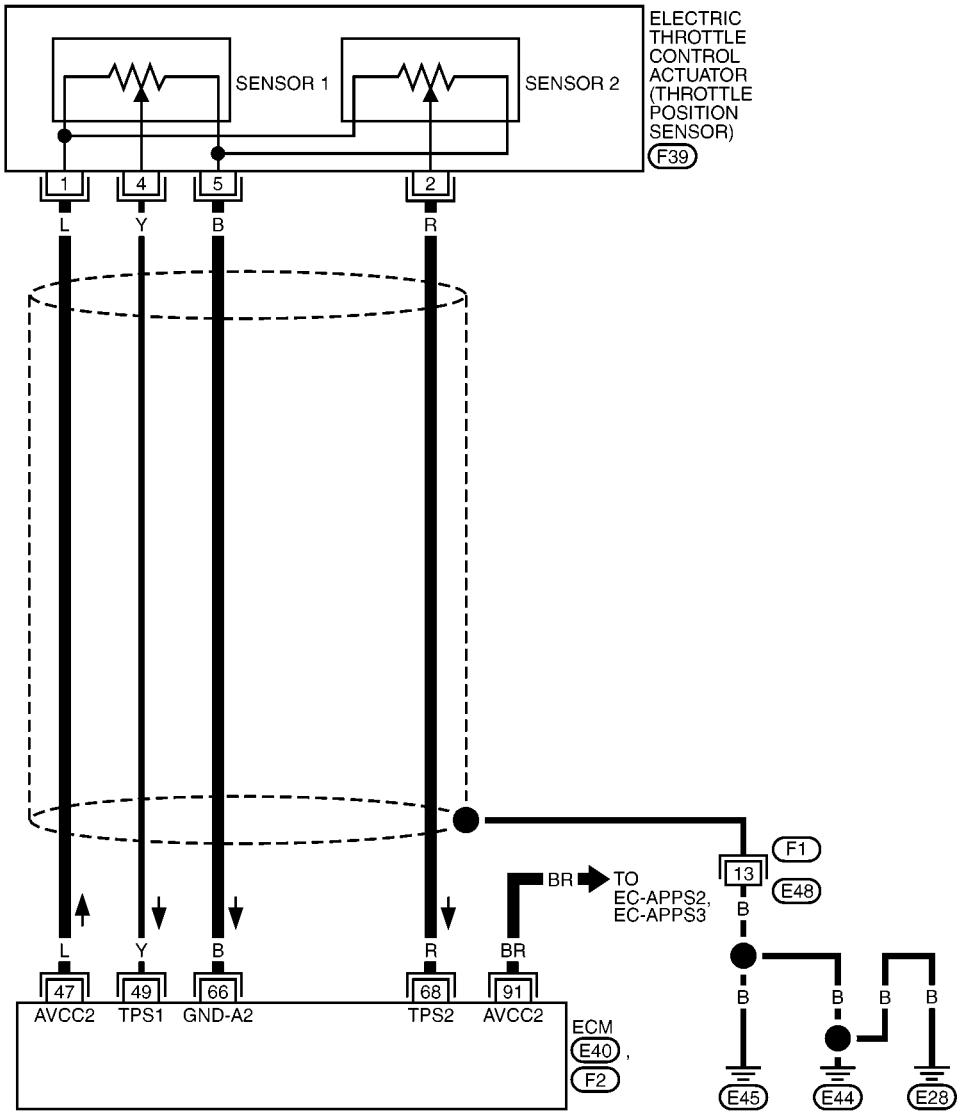

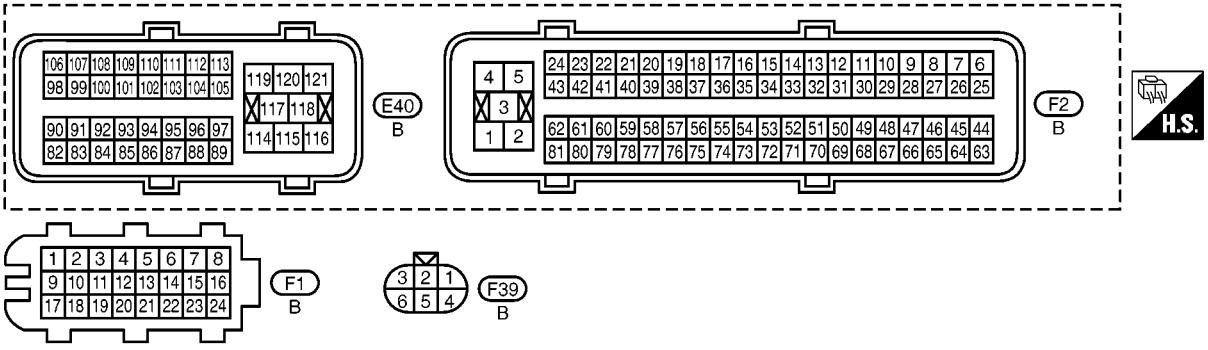

MBWA1509E

Specification data are reference values and are measured between each terminal and ground.

CAUTION:

Do not use ECM ground terminals when measuring input/output voltage. Doing so may result in damage to the ECM's transistor. Use a ground other than ECM terminals, such as the ground.

TERMINAL NO.	WIRE COLOR	ITEM	CONDITION	DATA (DC Voltage)
47	L	Sensor power supply (Throttle position sensor)	**[Ignition switch: ON]**	Approximately 5V
49	Y	Throttle position sensor 1	**[Ignition switch: ON]** ● **Engine stopped** ● Shift lever position: 1st ● Accelerator pedal: Fully released	More than 0.36V
			[Ignition switch: ON] ● **Engine stopped** ● Shift lever position: 1st ● Accelerator pedal: Fully depressed	Less than 4.75V
66	B	Sensor ground (Throttle position sensor)	**[Engine is running]** ● **Warm-up condition** ● Idle speed	Approximately 0V
68	R	Throttle position sensor 2	**[Ignition switch: ON]** ● **Engine stopped** ● Shift lever position: 1st ● Accelerator pedal: Fully released	Less than 4.75V
			[Ignition switch: ON] ● **Engine stopped** ● Shift lever position: 1st ● Accelerator pedal: Fully depressed	More than 0.36V
91	BR	Sensor power supply (APP sensor 2)	**[Ignition switch: ON]**	Approximately 5V

Diagnostic Procedure

BBS0036S

1. CHECK GROUND CONNECTIONS

1. Turn ignition switch OFF.
2. Loosen and retighten ground screws on the body.
   Refer to EC-548, "Ground Inspection" .

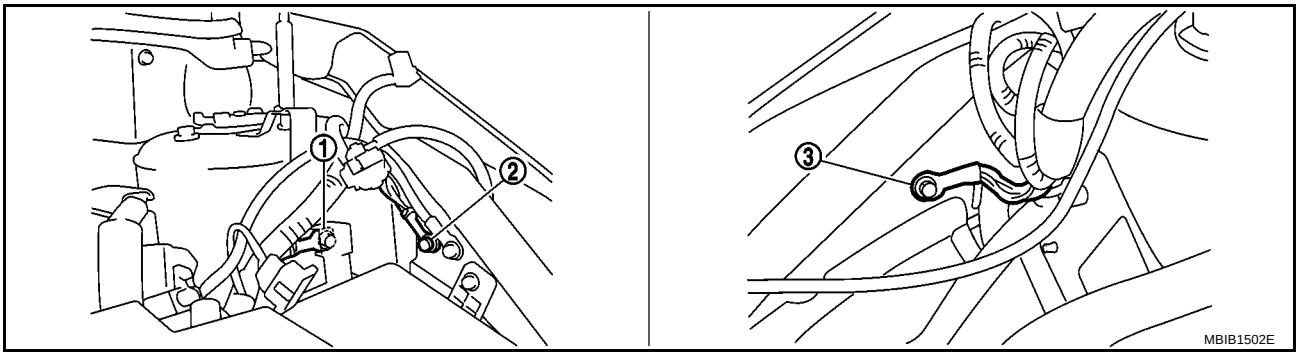

1. Body ground E44
2. Body ground E45
3. Body ground E28

OK or NG

OK >> GO TO 2.
NG >> Repair or replace ground connections.

2. CHECK THROTTLE POSITION SENSOR 2 POWER SUPPLY CIRCUIT-I

1. Disconnect electric throttle control actuator harness connector.
2. Turn ignition switch ON.

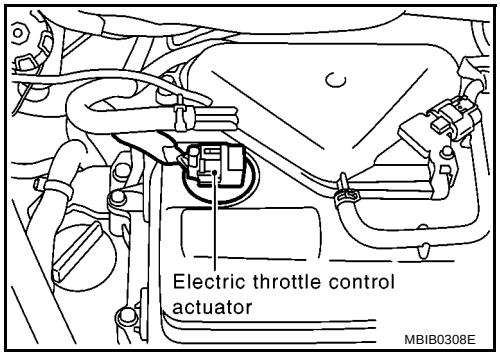

3. Check voltage between electric throttle control actuator terminal 1 and ground with CONSULT-II or tester.

Voltage: Approximately 5V

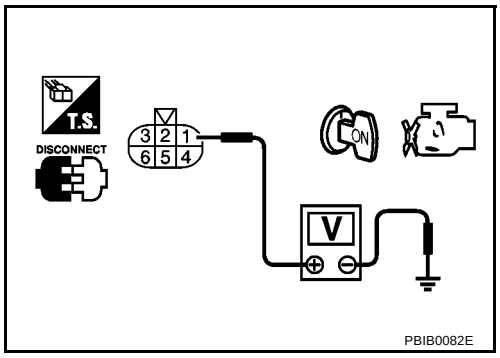

OK or NG

OK >> GO TO 7.
NG >> GO TO 3.

3. CHECK THROTTLE POSITION SENSOR 2 POWER SUPPLY CIRCUIT-II

1. Turn ignition switch OFF.
2. Disconnect ECM harness connector.
3. Check harness continuity between electric throttle control actuator terminal 1 and ECM terminal 47. Refer to Wiring Diagram.

Continuity should exist.

OK or NG

OK >> GO TO 4.
NG >> Repair open circuit.

4. CHECK THROTTLE POSITION SENSOR 2 POWER SUPPLY CIRCUIT-III

Check harness for short to power and short to ground, between the following terminals.

ECM terminal	Sensor terminal	Reference Wiring Diagram
47	Electric throttle control actuator terminal 1	EC-572
91	APP sensor terminal 5	EC-710

OK or NG

OK >> GO TO 5.
NG >> Repair short to ground or short to power in harness or connectors.

5. CHECK APP SENSOR

Refer to EC-716, "Component Inspection" .

OK or NG

OK >> GO TO 11
NG >> GO TO 6.

6. REPLACE ACCELERATOR PEDAL ASSEMBLY

1. Replace accelerator pedal assembly.
2. Perform EC-486, "Accelerator Pedal Released Position Learning" .
3. Perform EC-486, "Throttle Valve Closed Position Learning" .
4. Perform EC-486, "Idle Air Volume Learning" .

>> **INSPECTION END**

7. CHECK THROTTLE POSITION SENSOR 2 GROUND CIRCUIT FOR OPEN AND SHORT

1. Turn ignition switch OFF.
2. Disconnect ECM harness connector.
3. Check harness continuity between ECM terminal 66 and electric throttle control actuator terminal 5. Refer to Wiring Diagram.

Continuity should exist.

4. Also check harness for short to ground and short to power.

OK or NG

OK >> GO TO 8.
NG >> Repair open circuit or short to ground or short to power in harness or connectors.

8. CHECK THROTTLE POSITION SENSOR 2 INPUT SIGNAL CIRCUIT FOR OPEN AND SHORT

1. Check harness continuity between ECM terminal 68 and electric throttle control actuator terminal 2. Refer to Wiring Diagram.

Continuity should exist.

2. Also check harness for short to ground and short to power.

OK or NG

OK >> GO TO 9.
NG >> Repair open circuit or short to ground or short to power in harness or connectors.

9. CHECK THROTTLE POSITION SENSOR

Refer to EC-576, "Component Inspection" .

OK or NG

OK >> GO TO 11.
NG >> GO TO 10.

10. REPLACE ELECTRIC THROTTLE CONTROL ACTUATOR

1. Replace the electric throttle control actuator.
2. Perform EC-486, "Throttle Valve Closed Position Learning" .
3. Perform EC-486, "Idle Air Volume Learning" .

>> **INSPECTION END**

11. CHECK INTERMITTENT INCIDENT

Refer to EC-542, "TROUBLE DIAGNOSIS FOR INTERMITTENT INCIDENT" .

>> **INSPECTION END**

Component Inspection

BBS0036T

THROTTLE POSITION SENSOR

1. Reconnect all harness connectors disconnected.
2. Perform EC-486, "Throttle Valve Closed Position Learning" .
3. Turn ignition switch ON.
4. Set shift lever to 1st position.
5. Check voltage between ECM terminals 49 (TP sensor 1 signal), 68 (TP sensor 2 signal) and ground under the following conditions.

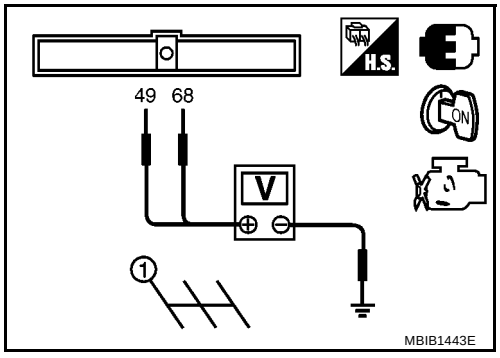

Terminal	Accelerator pedal	Voltage
49 (Throttle position sensor 1)	Fully released	More than 0.36V
	Fully depressed	Less than 4.75V
68 (Throttle position sensor 2)	Fully released	Less than 4.75V
	Fully depressed	More than 0.36V

6. If NG, replace electric throttle control actuator and go to the next step.
7. Perform EC-486, "Throttle Valve Closed Position Learning" .
8. Perform EC-486, "Idle Air Volume Learning" .

Removal and Installation

BBS0036U

ELECTRIC THROTTLE CONTROL ACTUATOR

Refer to EM-18, "AIR CLEANER AND AIR DUCT" .

DTC P0132 HO2S1

PFP:22690

Component Description

BBS0036V

The heated oxygen sensor 1 is placed into the exhaust manifold. It detects the amount of oxygen in the exhaust gas compared to the outside air. The heated oxygen sensor 1 has a closed-end tube made of ceramic zirconia. The zirconia generates voltage from approximately 1V in richer conditions to 0V in leaner conditions. The heated oxygen sensor 1 signal is sent to the ECM. The ECM adjusts the injection pulse duration to achieve the ideal air-fuel ratio. The ideal air-fuel ratio occurs near the radical change from 1V to 0V.

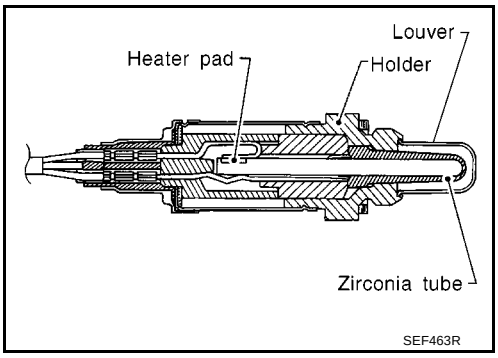

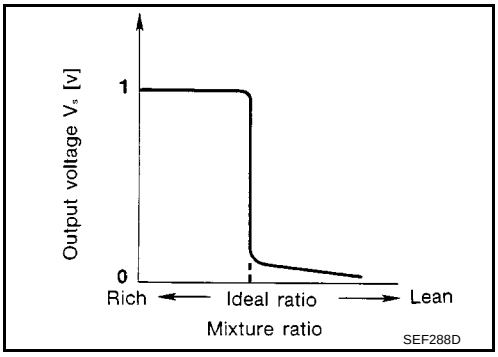

CONSULT-II Reference Value in Data Monitor Mode

BBS0036W

Specification data are reference values.

MONITOR ITEM	CONDITION		SPECIFICATION
HO2S1 (B1)	● Engine: After warming up	Maintaining engine speed at 2,000 rpm	0 - 0.3V ←→ Approx. 0.6 - 1.0V
HO2S1 MNTR (B1)			LEAN ←→ RICH Changes more than 5 times during 10 seconds.

On Board Diagnosis Logic

BBS0036X

To judge the malfunction, the diagnosis checks that the heated oxygen sensor 1 output is not inordinately high.

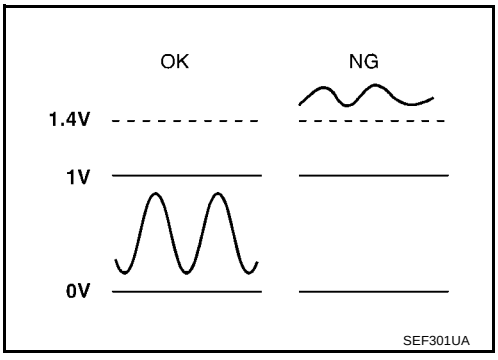

DTC No.	Trouble diagnosis name	DTC detecting condition	Possible cause
P0132 0132	Heated oxygen sensor 1 circuit high voltage	An excessively high voltage from the sensor is sent to ECM.	● Harness or connectors (The sensor circuit is open or shorted.) ● Heated oxygen sensor 1

DTC Confirmation Procedure

BBS0036Y

NOTE:
If DTC Confirmation Procedure has been previously conducted, always turn ignition switch OFF and wait at least 10 seconds before conducting the next test.

WITH CONSULT-II

1. Start engine and warm it up to normal operating temperature.
2. Turn ignition switch OFF and wait at least 10 seconds.
3. Turn ignition switch ON.
4. Select “DATA MONITOR” mode with CONSULT-II.
5. Restart engine and let it idle for 2 minutes.
6. If 1st trip DTC is detected, go to EC-580, "Diagnostic Procedure" .

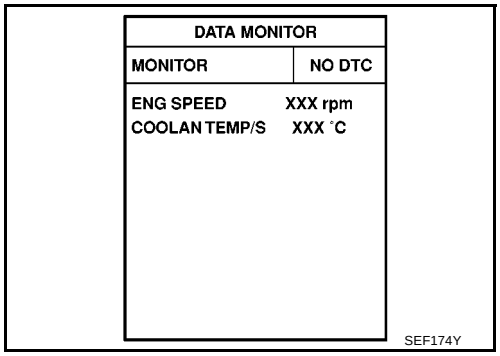

WITHOUT CONSULT-II

1. Start engine and warm it up to normal operating temperature.
2. Turn ignition switch OFF and wait at least 10 seconds.
3. Restart engine and let it idle for 2 minutes.
4. Turn ignition switch OFF and wait at least 10 seconds.
5. Perform Diagnostic Test Mode II (Self-diagnostic results) with ECM.
6. If 1st trip DTC is detected, go to EC-580, "Diagnostic Procedure" .

Wiring Diagram

BBS0036Z

EC-HO2S1-01

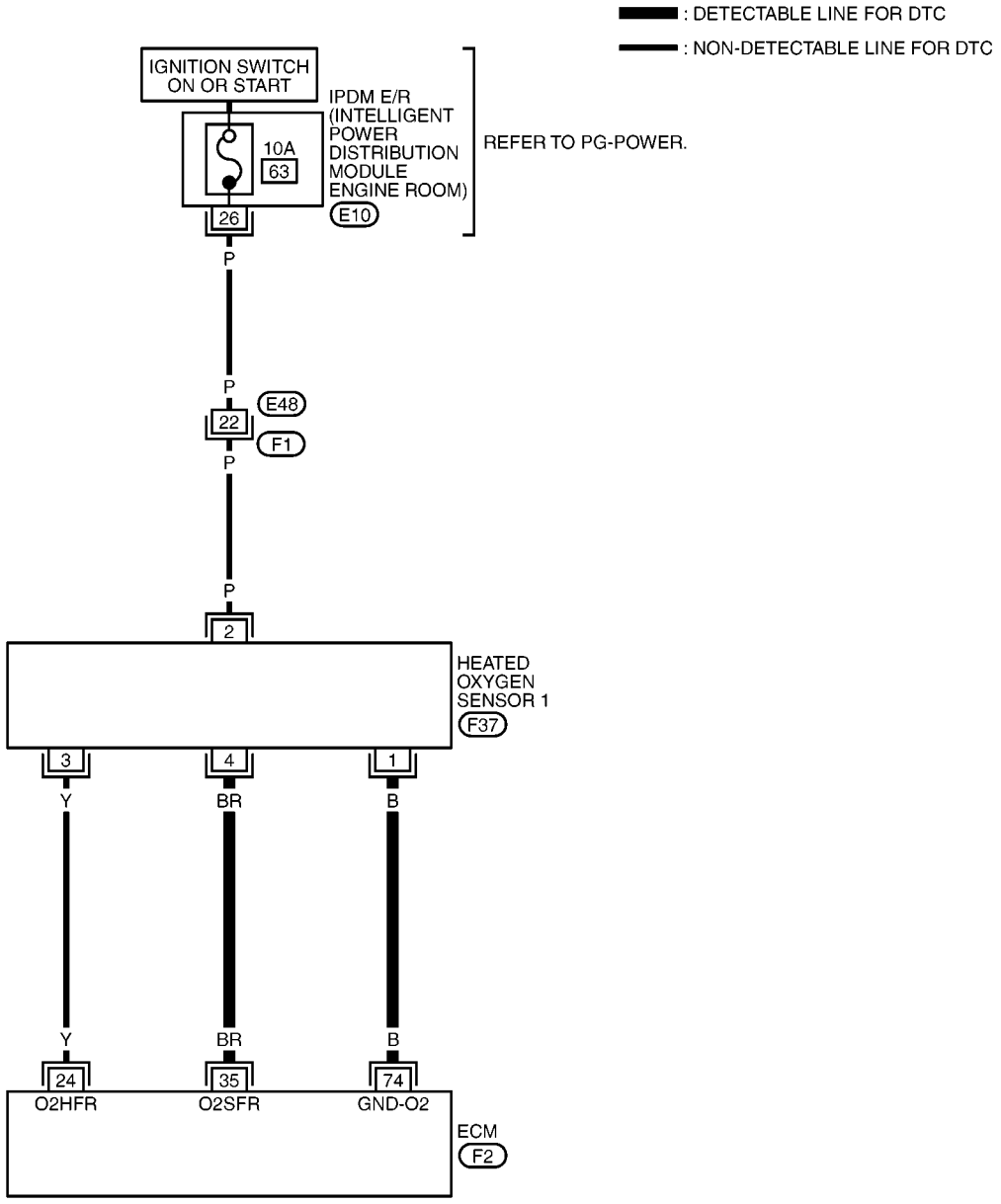

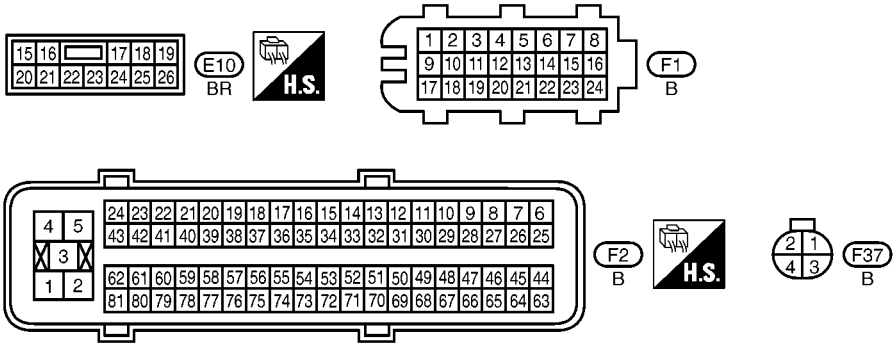

MBWA1510E

Specification data are reference values and are measured between each terminal and ground.
Pulse signal is measured by CONSULT-II.

CAUTION:
Do not use ECM ground terminals when measuring input/output voltage. Doing so may result in damage to the ECM's transistor. Use a ground other than ECM terminals, such as the ground.

TERMINAL NO.	WIRE COLOR	ITEM	CONDITION	DATA (DC Voltage)
24	Y	Heated oxygen sensor 1 heater	**[Engine is running]** ● **Warm-up condition** ● Engine speed: Below 3,600 rpm	Approximately 7.0V★ 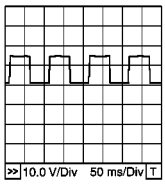 PBIB0519E
			[Engine is running] ● Engine speed: Above 3,600 rpm	BATTERY VOLTAGE (11 - 14V)
35	BR	Heated oxygen sensor 1	**[Engine is running]** ● **Warm-up condition** ● Engine speed: 2,000 rpm	0 - Approximately 1.0V (Periodically change)
74	B	Sensor ground (Heated oxygen sensor)	**[Engine is running]** ● **Warm-up condition** ● Idle speed	Approximately 0V

★: Average voltage for pulse signal (Actual pulse signal can be confirmed by oscilloscope.)

Diagnostic Procedure

BBS00370

1. CHECK GROUND CONNECTIONS

1. Turn ignition switch OFF.
2. Loosen and retighten ground screws on the body.
   Refer to EC-548, "Ground Inspection" .

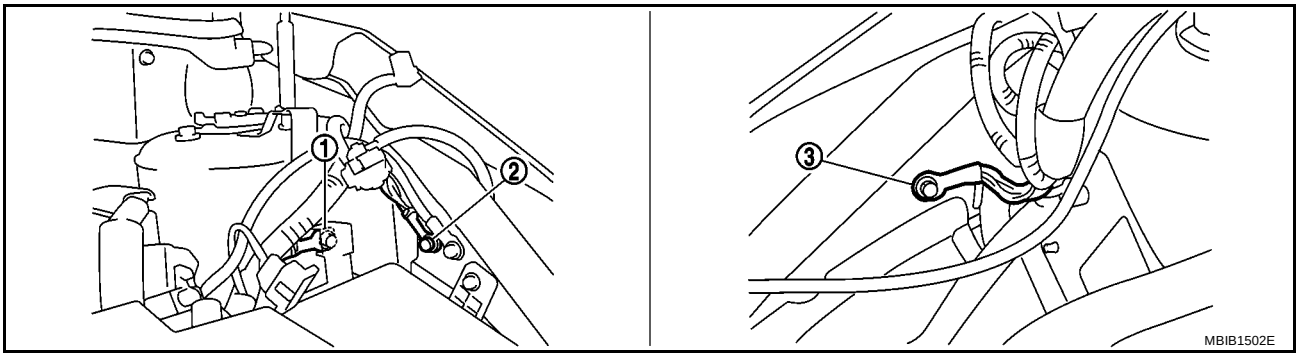

1. Body ground E44
2. Body ground E45
3. Body ground E28

OK or NG

OK >> GO TO 2.
NG >> Repair or replace ground connections.

2. RETIGHTEN HEATED OXYGEN SENSOR 1

Loosen and retighten heated oxygen sensor 1 (2).

- ⇦: Vehicle front
- Exhaust manifold cover (1)

Tightening torque: 50 N·m (5.1 kg-m, 37 ft-lb)

>> GO TO 3.

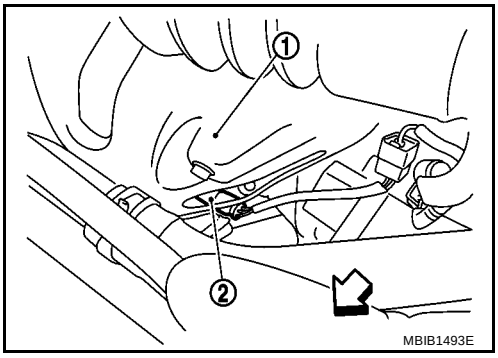

3. CHECK HO2S1 GROUND CIRCUIT FOR OPEN AND SHORT

1. Disconnect heated oxygen sensor 1 harness connector (1).
2. Disconnect ECM harness connector.
3. Check harness continuity between ECM terminal 74 and HO2S1 terminal 1.
   Refer to Wiring Diagram.

   Continuity should exist.

4. Also check harness for short to ground and short to power.

OK or NG

OK >> GO TO 4.
NG >> Repair open circuit or short to ground or short to power in harness or connectors.

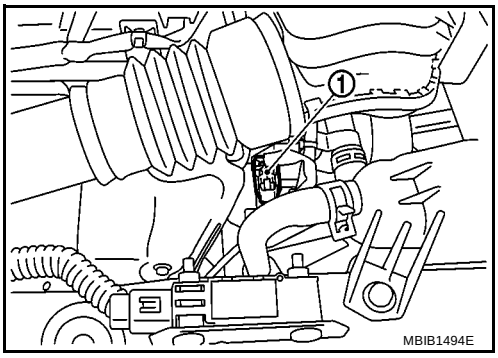

4. CHECK HO2S1 INPUT SIGNAL CIRCUIT FOR OPEN AND SHORT

1. Check harness continuity between ECM terminal 35 and HO2S1 terminal 4.
   Refer to Wiring Diagram.

   Continuity should exist.

2. Check harness continuity between ECM terminal 35 or HO2S1 terminal 4 and ground.
   Refer to Wiring Diagram.

   Continuity should not exist.

3. Also check harness for short to power.

OK or NG

OK >> GO TO 5.
NG >> Repair open circuit or short to ground or short to power in harness or connectors.

5. CHECK HO2S1 CONNECTOR FOR WATER

Check connectors for water

Water should not exist.

OK or NG

OK >> GO TO 6.
NG >> Repair or replace harness or connectors.

6. CHECK HEATED OXYGEN SENSOR 1

Refer to EC-582, "Component Inspection" .

OK or NG

OK >> GO TO 7.
NG >> Replace heated oxygen sensor 1.

7. CHECK INTERMITTENT INCIDENT

Refer to EC-542, "TROUBLE DIAGNOSIS FOR INTERMITTENT INCIDENT" .

>> **INSPECTION END**

Component Inspection

BBS00371

HEATED OXYGEN SENSOR 1

With CONSULT-II

1. Start engine and warm it up to normal operating temperature.
2. Select “MANU TRIG” and adjust “TRIGGER POINT” to 100% in “DATA MONITOR” mode with CONSULT-II.
3. Select “HO2S1 (B1)” and “HO2S1 MNTR (B1)”.
4. Hold engine speed at 2,000 rpm under no load during the following steps.
5. Touch “RECORD” on CONSULT-II screen.

DATA MONITOR	
MONITOR	NO DTC
ENG SPEED	XXX rpm
COOLAN TEMP/S	XXX °C
HO2S1 (B1)	XXX V
HO2S1 MNTR (B1)	LEAN

MBIB0301E

6. Check the following.
   - “HO2S1 MNTR (B1)” in “DATA MONITOR” mode changes from “RICH” to “LEAN” to “RICH” more than 5 times in 10 seconds.
     5 times (cycles) are counted as shown in the figure.
   - “HO2S1 (B1)” voltage goes above 0.6V at least once.
   - “HO2S1 (B1)” voltage goes below 0.3V at least once.
   - “HO2S1 (B1)” voltage never exceeds 1.0V.

cycle	1	2	3	4	5
HO2S1 MNTR (B1)	R-L-R-L-R-L-R-L-R-L-R				

R means HO2S1 MNTR (B1) indicates RICH
L means HO2S1 MNTR (B1) indicates LEAN

SEF217YA

Trigger	ENG SPEED	HO2S1 (B1)
	rpm	V
XXX	XXX	XXX
XXX	XXX	XXX
XXX	XXX	XXX
XXX	XXX	XXX
XXX	XXX	XXX
XXX	XXX	XXX
XXX	XXX	XXX
XXX	XXX	XXX
XXX	XXX	XXX
XXX	XXX	XXX
XXX	XXX	XXX
XXX	XXX	XXX

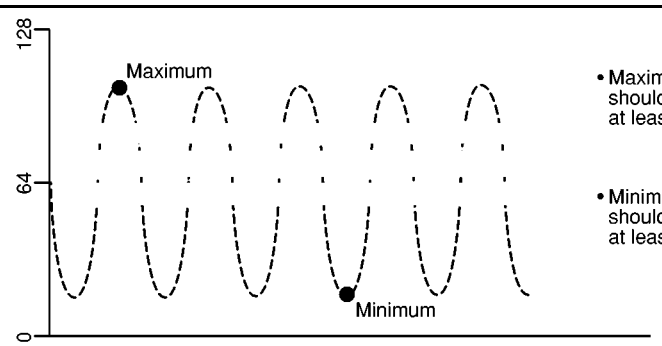

- Maximum voltage should be over 0.6V at least one time.
- Minimum voltage should be below 0.30V at least one time.

SEF648Y

CAUTION:

- **Discard any heated oxygen sensor which has been dropped from a height of more than 0.5 m (19.7 in) onto a hard surface such as a concrete floor; use a new one.**

- **Before installing new oxygen sensor, clean exhaust system threads using Oxygen Sensor Thread Cleaner and approved anti-seize lubricant.**

Without CONSULT-II

1. Start engine and warm it up to normal operating temperature.
2. Set voltmeter probes between ECM terminal 35 (HO2S1 signal) and ground.
3. Check the following with engine speed held at 2,000 rpm constant under no load.
   - The voltage fluctuates between 0 to 0.3V and 0.6 to 1.0V more than 5 times within 10 seconds.
   - The maximum voltage is over 0.6V at least one time.
   - The minimum voltage is below 0.3V at least one time.
   - The voltage never exceeds 1.0V.

   1 time: 0 - 0.3V → 0.6 - 1.0V → 0 - 0.3V
   2 times: 0 - 0.3V → 0.6 - 1.0V → 0 - 0.3V → 0.6 - 1.0V → 0 - 0.3V

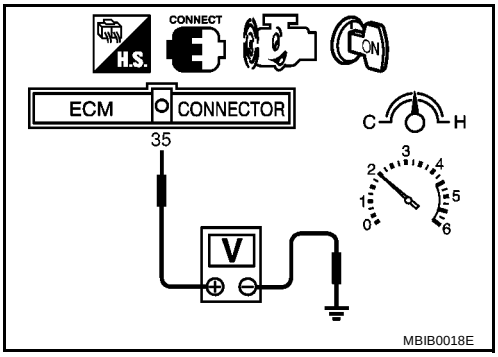

CAUTION:

- **Discard any heated oxygen sensor which has been dropped from a height of more than 0.5 m (19.7 in) onto a hard surface such as a concrete floor; use a new one.**
- **Before installing new oxygen sensor, clean exhaust system threads using Oxygen Sensor Thread Cleaner and approved anti-seize lubricant.**

Removal and Installation

BBS00372

HEATED OXYGEN SENSOR 1

Refer to EM-24, "EXHAUST MANIFOLD AND THREE WAY CATALYST" .

DTC P0134 HO2S1

PFP:22690

Component Description

BBS00373

The heated oxygen sensor 1 is placed into the exhaust manifold. It detects the amount of oxygen in the exhaust gas compared to the outside air. The heated oxygen sensor 1 has a closed-end tube made of ceramic zirconia. The zirconia generates voltage from approximately 1V in richer conditions to 0V in leaner conditions. The heated oxygen sensor 1 signal is sent to the ECM. The ECM adjusts the injection pulse duration to achieve the ideal air-fuel ratio. The ideal air-fuel ratio occurs near the radical change from 1V to 0V.

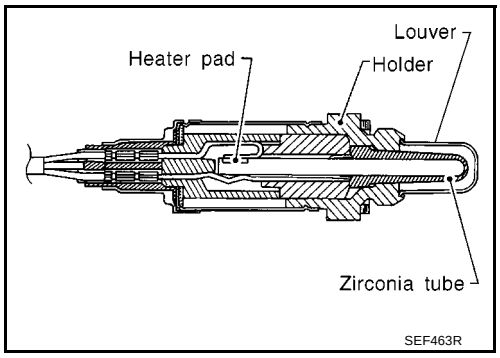

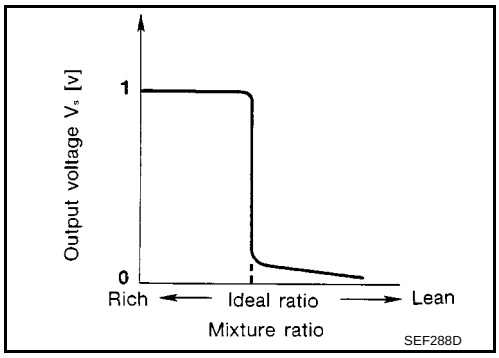

CONSULT-II Reference Value in Data Monitor Mode

BBS00374

Specification data are reference values.

MONITOR ITEM	CONDITION		SPECIFICATION
HO2S1 (B1)	● Engine: After warming up	Maintaining engine speed at 2,000 rpm	0 - 0.3V ←→ Approx. 0.6 - 1.0V
HO2S1 MNTR (B1)			LEAN ←→ RICH Changes more than 5 times during 10 seconds.

On Board Diagnosis Logic

BBS00375

Under the condition in which the heated oxygen sensor 1 signal is not input, the ECM circuits will read a continuous approximately 0.3V. Therefore, for this diagnosis, the time that output voltage is within 200 to 400 mV range is monitored, and the diagnosis checks that this time is not inordinately long.

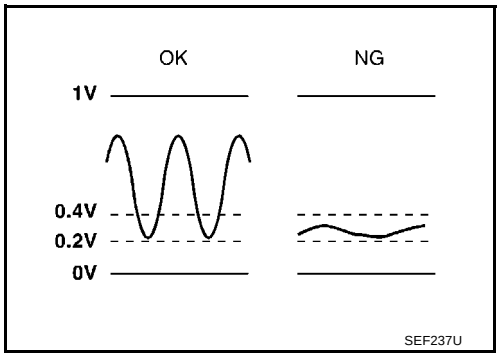

DTC No.	Trouble diagnosis name	DTC detecting condition	Possible cause
P0134 0134	Heated oxygen sensor 1 circuit no activity detected	The voltage from the sensor is constantly approx. 0.3V.	● Harness or connectors (The sensor circuit is open or shorted.) ● Heated oxygen sensor 1

Overall Function Check

BBS00376

Use this procedure to check the overall function of the heated oxygen sensor 1 circuit. During this check, a 1st trip DTC might not be confirmed.

WITH CONSULT-II

1. Start engine and warm it up to normal operating temperature.
2. Select “MANU TRIG” in “DATA MONITOR” mode with CONSULT-II, and select “HO2S1 (B1)”.
3. Hold engine speed at 2,000 rpm under no load.
4. Make sure that the indications do not remain in the range between 0.2V to 0.4V.
5. If NG, go to EC-587, "Diagnostic Procedure" .

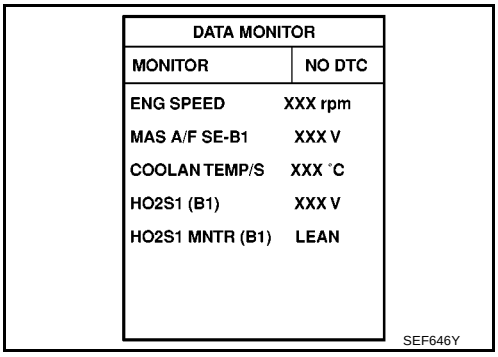

DATA MONITOR	
MONITOR	NO DTC
ENG SPEED	XXX rpm
MAS A/F SE-B1	XXX V
COOLAN TEMP/S	XXX °C
HO2S1 (B1)	XXX V
HO2S1 MNTR (B1)	LEAN

SEF646Y

WITHOUT CONSULT-II

1. Start engine and warm it up to normal operating temperature.
2. Set voltmeter probes between ECM terminal 35 (HO2S1 signal) and ground.
3. Check the following with engine speed held at 2,000 rpm constant under no load.

- The voltage does not remain in the range of 0.2 - 0.4V.

4. If NG, go to EC-587, "Diagnostic Procedure" .

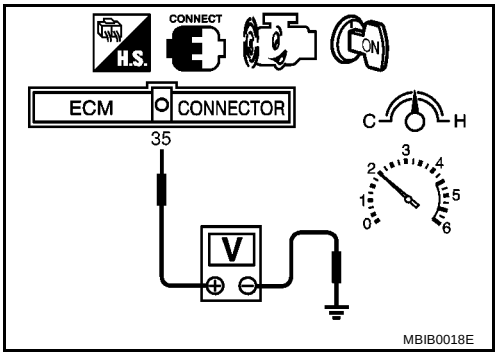

MBIB0018E

Wiring Diagram

BBS00377

EC-HO2S1-01

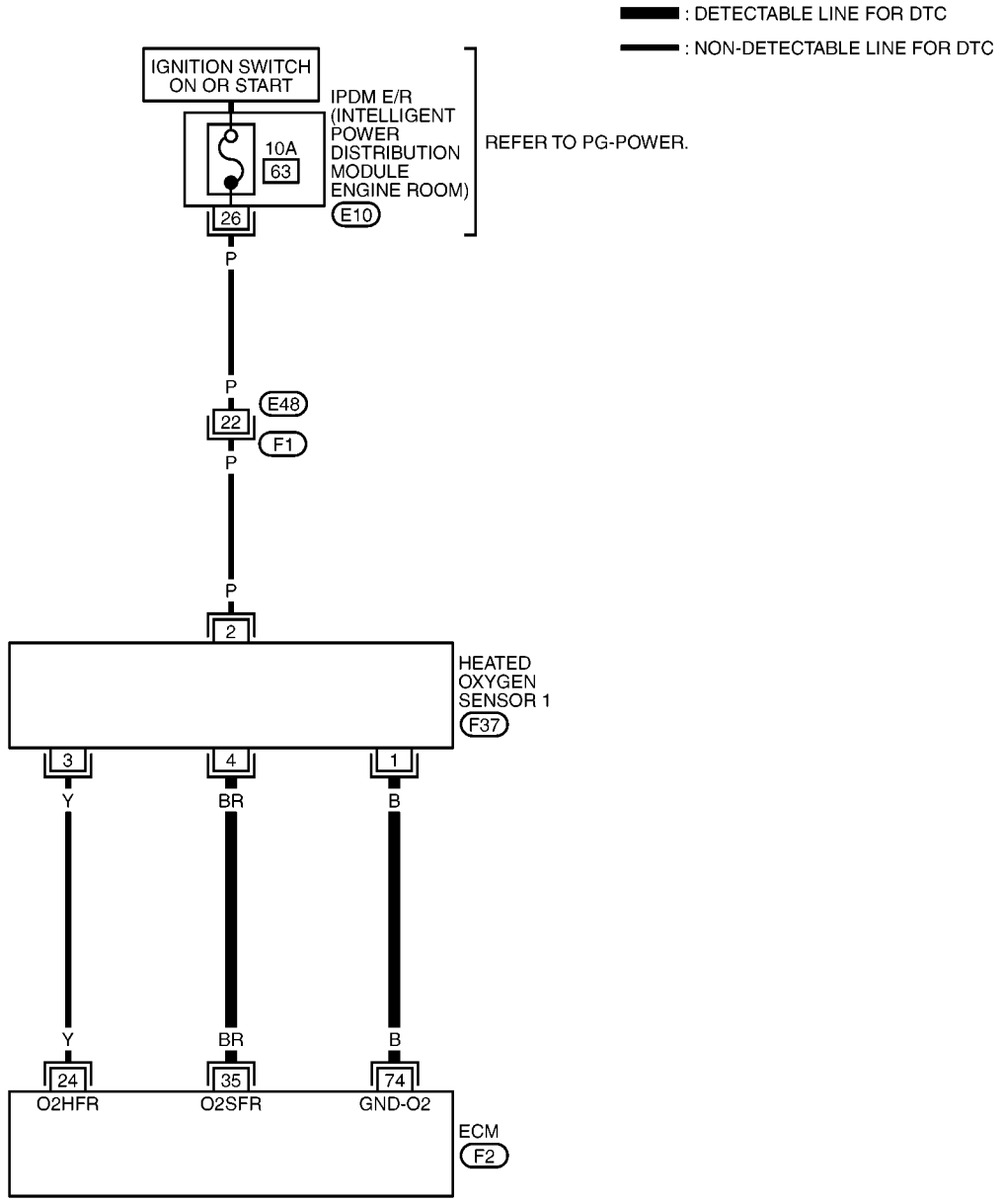

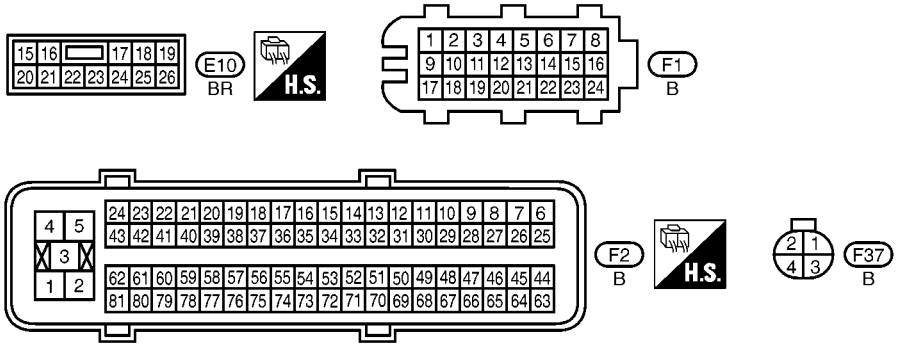

MBWA1510E

Specification data are reference values and are measured between each terminal and ground.
Pulse signal is measured by CONSULT-II.

CAUTION:
Do not use ECM ground terminals when measuring input/output voltage. Doing so may result in damage to the ECM's transistor. Use a ground other than ECM terminals, such as the ground.

TERMINAL NO.	WIRE COLOR	ITEM	CONDITION	DATA (DC Voltage)
24	Y	Heated oxygen sensor 1 heater	**[Engine is running]** ● **Warm-up condition** ● Engine speed: Below 3,600 rpm	Approximately 7.0V★ 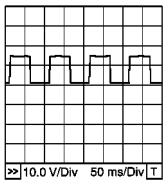 PBIB0519E
			[Engine is running] ● Engine speed Above 3,600 rpm	BATTERY VOLTAGE (11 - 14V)
35	BR	Heated oxygen sensor 1	**[Engine is running]** ● **Warm-up condition** ● Engine speed: 2,000 rpm	0 - Approximately 1.0V (Periodically change)
74	B	Sensor ground (Heated oxygen sensor)	**[Engine is running]** ● **Warm-up condition** ● Idle speed	Approximately 0V

★: Average voltage for pulse signal (Actual pulse signal can be confirmed by oscilloscope.)

Diagnostic Procedure

BBS00378

1. CHECK GROUND CONNECTIONS

1. Turn ignition switch OFF.
2. Loosen and retighten ground screws on the body.
   Refer to EC-548, "Ground Inspection" .

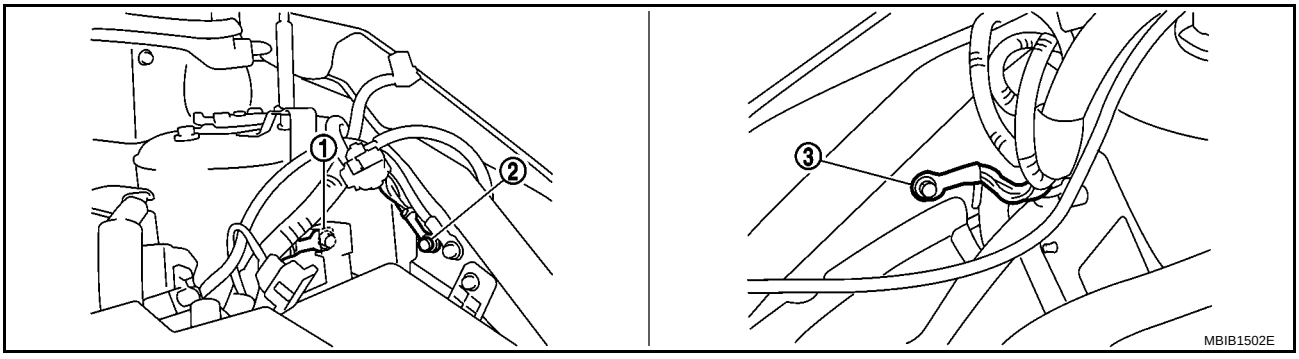

1. Body ground E44
2. Body ground E45
3. Body ground E28

OK or NG

OK >> GO TO 2.
NG >> Repair or replace ground connections.

2. CHECK HO2S1 GROUND CIRCUIT FOR OPEN AND SHORT

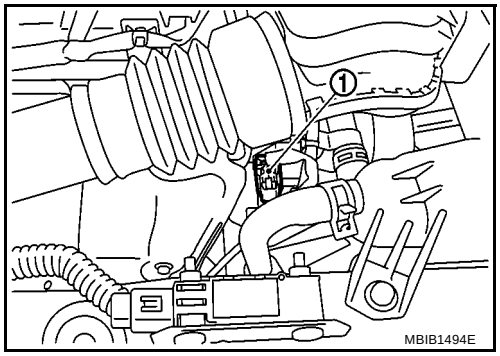

1. Disconnect heated oxygen sensor 1 harness connector (1).
2. Disconnect ECM harness connector.
3. Check harness continuity between ECM terminal 74 and HO2S1 terminal 1. Refer to Wiring Diagram.

   Continuity should exist.

4. Also check harness for short to ground and short to power.

OK or NG

OK >> GO TO 3.
NG >> Repair open circuit or short to ground or short to power in harness or connectors.

3. CHECK HO2S1 INPUT SIGNAL CIRCUIT FOR OPEN AND SHORT

1. Check harness continuity between ECM terminal 35 and HO2S1 terminal 4. Refer to Wiring Diagram.

   Continuity should exist.

2. Check harness continuity between ECM terminal 35 or HO2S1 terminal 4 and ground. Refer to Wiring Diagram.

   Continuity should not exist.

3. Also check harness for short to power.

OK or NG

OK >> GO TO 4.
NG >> Repair open circuit or short to ground or short to power in harness or connectors.

4. CHECK HEATED OXYGEN SENSOR 1

Refer to EC-589, "Component Inspection" .

OK or NG

OK >> GO TO 5.
NG >> Replace heated oxygen sensor 1.

5. CHECK INTERMITTENT INCIDENT

Refer to EC-542, "TROUBLE DIAGNOSIS FOR INTERMITTENT INCIDENT" .

>> **INSPECTION END**

Component Inspection

BBS00379

HEATED OXYGEN SENSOR 1

With CONSULT-II

1. Start engine and warm it up to normal operating temperature.
2. Select “MANU TRIG” and adjust “TRIGGER POINT” to 100% in “DATA MONITOR” mode with CONSULT-II.
3. Select “HO2S1 (B1)” and “HO2S1 MNTR (B1)”.
4. Hold engine speed at 2,000 rpm under no load during the following steps.
5. Touch “RECORD” on CONSULT-II screen.

DATA MONITOR	
MONITOR	NO DTC
ENG SPEED	XXX rpm
COOLAN TEMP/S	XXX °C
HO2S1 (B1)	XXX V
HO2S1 MNTR (B1)	LEAN

MBIB0301E

6. Check the following.
   - “HO2S1 MNTR (B1)” in “DATA MONITOR” mode changes from “RICH” to “LEAN” to “RICH” more than 5 times in 10 seconds.
     5 times (cycles) are counted as shown in the figure.
   - “HO2S1 (B1)” voltage goes above 0.6V at least once.
   - “HO2S1 (B1)” voltage goes below 0.3V at least once.
   - “HO2S1 (B1)” voltage never exceeds 1.0V.

cycle	1	2	3	4	5
HO2S1 MNTR (B1)	R-L-R-L-R-L-R-L-R-L-R				

R means HO2S1 MNTR (B1) indicates RICH
L means HO2S1 MNTR (B1) indicates LEAN

SEF217YA

Trigger	ENG SPEED	HO2S1 (B1)
	rpm	V
XXX	XXX	XXX
XXX	XXX	XXX
XXX	XXX	XXX
XXX	XXX	XXX
XXX	XXX	XXX
XXX	XXX	XXX
XXX	XXX	XXX
XXX	XXX	XXX
XXX	XXX	XXX
XXX	XXX	XXX
XXX	XXX	XXX
XXX	XXX	XXX

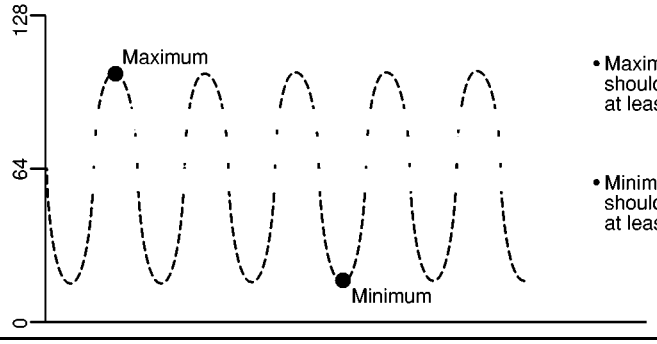

CAUTION:

- **Discard any heated oxygen sensor which has been dropped from a height of more than 0.5 m (19.7 in) onto a hard surface such as a concrete floor; use a new one.**
- **Before installing new oxygen sensor, clean exhaust system threads using Oxygen Sensor Thread Cleaner and approved anti-seize lubricant.**

Without CONSULT-II

1. Start engine and warm it up to normal operating temperature.
2. Set voltmeter probes between ECM terminal 35 (HO2S1 signal) and ground.

3. Check the following with engine speed held at 2,000 rpm constant under no load.
   - The voltage fluctuates between 0 to 0.3V and 0.6 to 1.0V more than 5 times within 10 seconds.
   - The maximum voltage is over 0.6V at least one time.
   - The minimum voltage is below 0.3V at least one time.
   - The voltage never exceeds 1.0V.

   1 time: 0 - 0.3V → 0.6 - 1.0V → 0 - 0.3V
   2 times: 0 - 0.3V → 0.6 - 1.0V → 0 - 0.3V → 0.6 - 1.0V → 0 - 0.3V

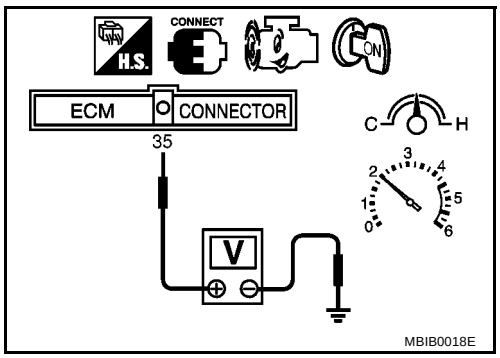

CAUTION:

- **Discard any heated oxygen sensor which has been dropped from a height of more than 0.5 m (19.7 in) onto a hard surface such as a concrete floor; use a new one.**
- **Before installing new oxygen sensor, clean exhaust system threads using Oxygen Sensor Thread Cleaner and approved anti-seize lubricant.**

Removal and Installation

BBS0037A

HEATED OXYGEN SENSOR 1

Refer to EM-24, "EXHAUST MANIFOLD AND THREE WAY CATALYST" .

DTC P0138 HO2S2

PFP:226A0

Component Description

BBS0037B

The heated oxygen sensor 2, after three way catalyst (manifold), monitors the oxygen level in the exhaust gas.
Even if switching characteristics of the heated oxygen sensor 1 are shifted, the air-fuel ratio is controlled to stoichiometric, by the signal from the heated oxygen sensor 2.
This sensor is made of ceramic zirconia. The zirconia generates voltage from approximately 1V in richer conditions to 0V in leaner conditions.
Under normal conditions the heated oxygen sensor 2 is not used for engine control operation.

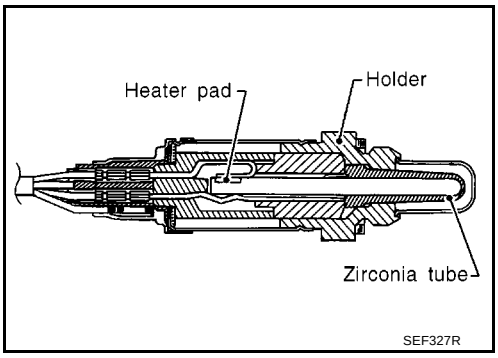

CONSULT-II Reference Value in Data Monitor Mode

BBS0037C

Specification data are reference values.

MONITOR ITEM	CONDITION	SPECIFICATION
HO2S2 (B1)	● Revving engine from idle to 3,000 rpm quickly after the following conditions are met. – Engine: After warning up – Keeping the engine speed between 3,500 and 4,000 rpm for 1 minute and at idle for 1 minute under no load.	0 - 0.3V ←→ Approx. 0.6 - 1.0V
HO2S2 MNTR (B1)		LEAN ←→ RICH

On Board Diagnosis Logic

BBS0037D

The heated oxygen sensor 2 has a much longer switching time between rich and lean than the heated oxygen sensor 1. The oxygen storage capacity before the three way catalyst (manifold) causes the longer switching time. To judge the malfunctions of heated oxygen sensor 2, ECM monitors whether the voltage is unusually high during the various driving condition such as fuel-cut.

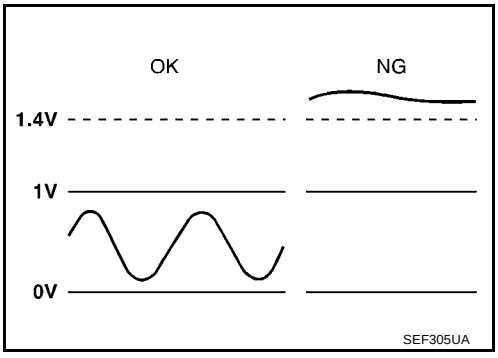

DTC No.	Trouble diagnosis name	DTC detecting condition	Possible cause
P0138 0138	Heated oxygen sensor 2 circuit high voltage	An excessively high voltage from the sensor is sent to ECM.	● Harness or connectors (The sensor circuit is open or shorted.) ● Heated oxygen sensor 2

DTC Confirmation Procedure

BBS0037E

NOTE:
If DTC Confirmation Procedure has been previously conducted, always turn ignition switch OFF and wait at least 10 seconds before conducting the next test.

WITH CONSULT-II

1. Turn ignition switch ON and select “DATA MONITOR” mode with CONSULT-II.
2. Start engine and warm it up to the normal operating temperature.
3. Turn ignition switch OFF and wait at least 10 seconds.
4. Start engine and keep the engine speed between 3,500 and 4,000 rpm for at least 1 minute under no load.
5. Let engine idle for 2 minutes.
6. If 1st trip DTC is detected, go to EC-594, "Diagnostic Procedure" .

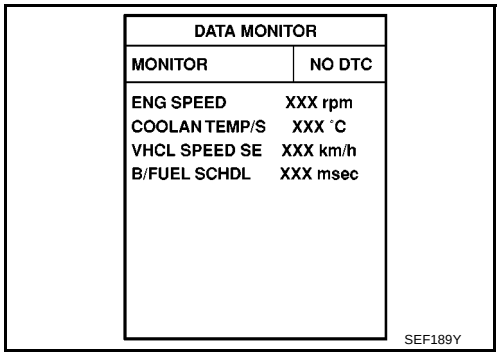

WITHOUT CONSULT-II

1. Start engine and warm it up to the normal operating temperature.
2. Turn ignition switch OFF and wait at least 10 seconds.
3. Start engine and keep the engine speed between 3,500 and 4,000 rpm for at least 1 minute under no load.
4. Let engine idle for 2 minutes.
5. Turn ignition switch OFF and wait at least 10 seconds and then turn ON.
6. Perform Diagnostic Test Mode II (Self-diagnostic results) with ECM.
7. If 1st trip DTC is detected, go to EC-594, "Diagnostic Procedure" .

Wiring Diagram

BBS0037F

EC-HO2S2-01

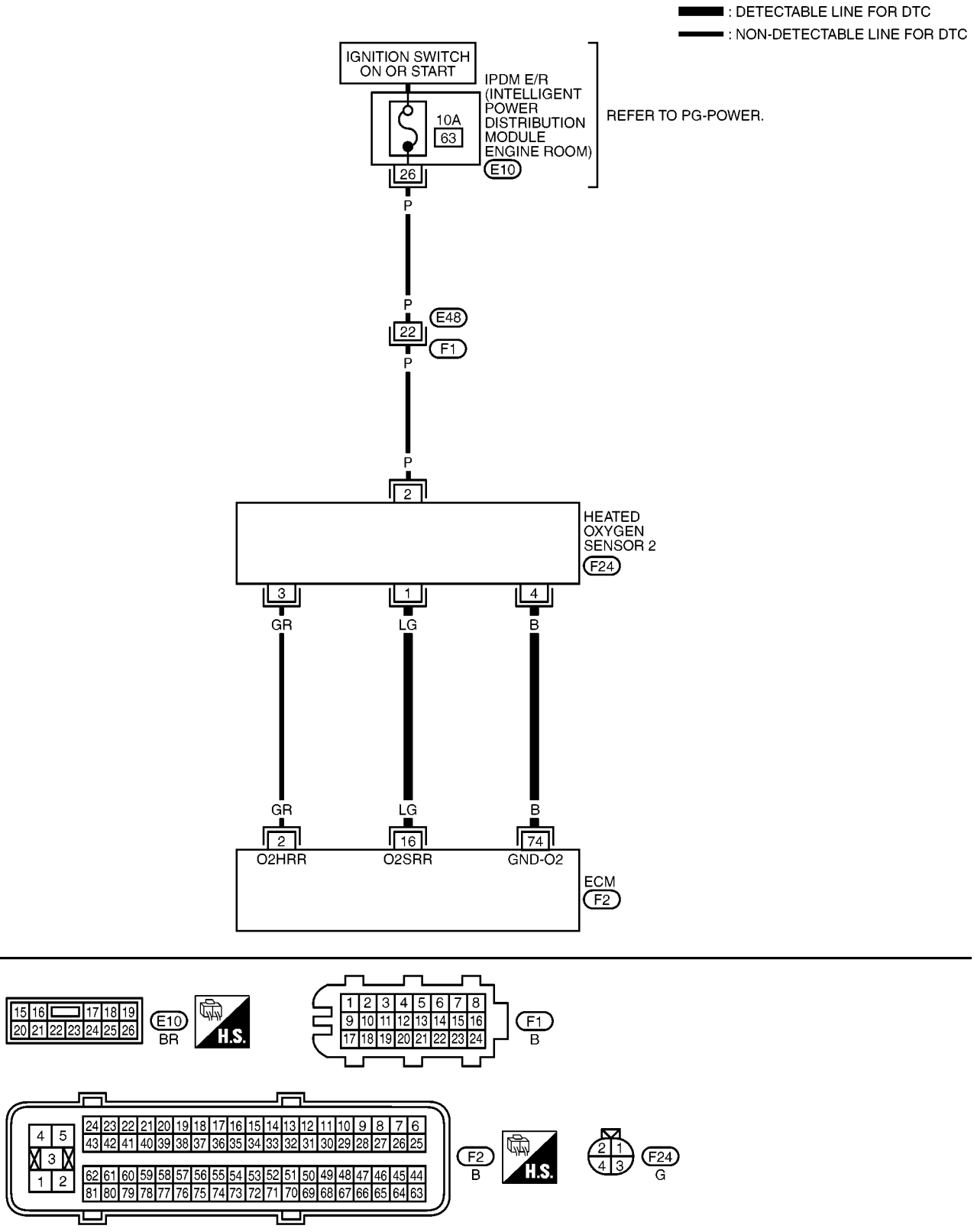

MBWA1511E

Specification data are reference values and are measured between each terminal and ground.

CAUTION:

Do not use ECM ground terminals when measuring input/output voltage. Doing so may result in damage to the ECM's transistor. Use a ground other than ECM terminals, such as the ground.

TERMINAL NO.	WIRE COLOR	ITEM	CONDITION	DATA (DC Voltage)
2	GR	Heated oxygen sensor 2 heater	**[Engine is running]** ● Engine speed: Below 3,800 rpm after the following conditions are met. – Engine: After warming up – Keeping the engine speed between 3,500 and 4,000 rpm for 1 minute and at idle for 1 minute under no load.	0 - 1.0V
			[Ignition switch ON] ● Engine stopped **[Engine is running]** ● Engine speed: Above 3,800 rpm	BATTERY VOLTAGE (11 - 14V)
16	LG	Heated oxygen sensor 2	**[Engine is running]** ● Revving engine from idle to 3,000rpm quickly after the following conditions are met. – Engine: After warming up – Keeping the engine speed between 3,500 and 4,000 rpm for 1 minute and at idle for 1 minute under no load.	0 - Approximately 1.0V
74	B	Sensor ground (Heated oxygen sensor)	**[Engine is running]** ● **Warm-up condition** ● Idle speed	Approximately 0V

Diagnostic Procedure

BBS0037G

1. CHECK GROUND CONNECTIONS

1. Turn ignition switch OFF.
2. Loosen and retighten ground screws on the body.
   Refer to EC-548, "Ground Inspection" .

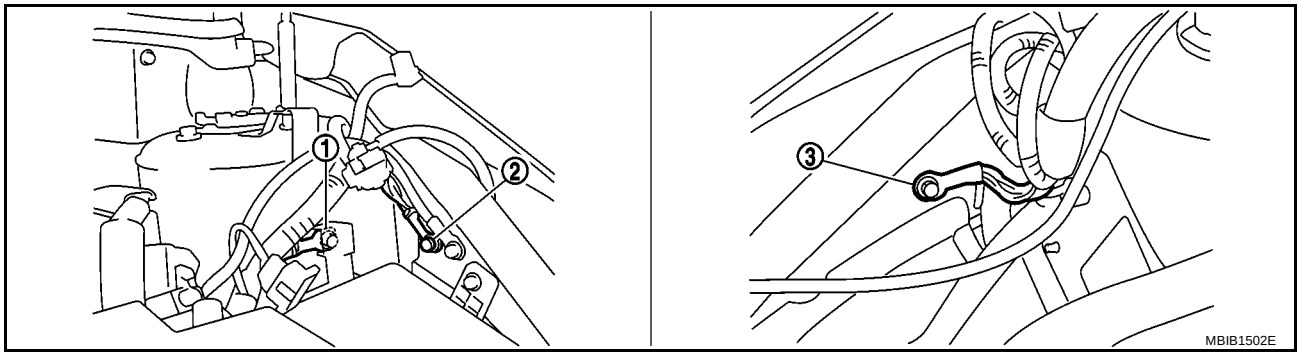

1. Body ground E44
2. Body ground E45
3. Body ground E28

OK or NG

OK >> GO TO 2.
NG >> Repair or replace ground connections.

2. CHECK HO2S2 GROUND CIRCUIT FOR OPEN AND SHORT

1. Disconnect heated oxygen sensor 2 harness connector (1).
- ⇦: Vehicle front
- Heated oxygen sensor 2 (2)
- Oil pan (3)
2. Disconnect ECM harness connector.
3. Check harness continuity between ECM terminal 74 and HO2S2 terminal 4.
   Refer to Wiring Diagram.

   Continuity should exist.

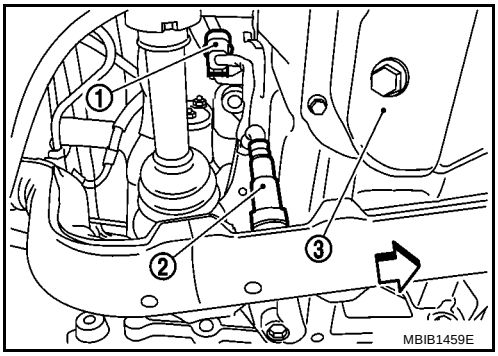

4. Also check harness for short to ground and short to power.

OK or NG

OK >> GO TO 3.
NG >> Repair open circuit or short to ground or short to power in harness or connectors.

3. CHECK HO2S2 INPUT SIGNAL CIRCUIT FOR OPEN AND SHORT

1. Check harness continuity between ECM terminal 16 and HO2S2 terminal 1.
   Refer to Wiring Diagram.

   Continuity should exist.

2. Check harness continuity between ECM terminal 16 or HO2S2 terminal 1 and ground.
   Refer to Wiring Diagram.

   Continuity should not exist.

3. Also check harness for short to power.

OK or NG

OK >> GO TO 4.
NG >> Repair open circuit or short to ground or short to power in harness or connectors.

4. CHECK HO2S2 CONNECTOR FOR WATER

Check connectors for water.

Water should not exist.

OK or NG

OK >> GO TO 5.
NG >> Repair or replace harness or connectors.

5. CHECK HEATED OXYGEN SENSOR 2

Refer to EC-596, "Component Inspection" .

OK or NG

OK >> GO TO 6.
NG >> Replace heated oxygen sensor 2.

6. CHECK INTERMITTENT INCIDENT

Refer to EC-542, "TROUBLE DIAGNOSIS FOR INTERMITTENT INCIDENT" .

>> **INSPECTION END**

Component Inspection

BBS0037H

HEATED OXYGEN SENSOR 2

With CONSULT-II

1. Turn ignition switch ON and select “DATA MONITOR” mode with CONSULT-II.
2. Start engine and warm it up to the normal operating temperature.
3. Turn ignition switch OFF and wait at least 10 seconds.
4. Start engine and keep the engine speed between 3,500 and 4,000 rpm for at least 1 minute under no load.
5. Let engine idle for 1 minute.

DATA MONITOR	
MONITOR	NO DTC
ENG SPEED	XXX rpm
COOLAN TEMP/S	XXX °C

SEF174Y

6. Select “FUEL INJECTION” in “ACTIVE TEST” mode, and select “HO2S2(B1)” as the monitor item with CONSULT-II.

ACTIVE TEST	
FUEL INJECTION	25 %
MONITOR	
ENG SPEED	XXX rpm
HO2S1 (B1)	XXX V
HO2S2 (B1)	XXX V
HO2S1 MNTR (B1)	RICH
HO2S2 MNTR (B1)	RICH

SEF662Y

7. Check “HO2S2 (B1)” at idle speed when adjusting “FUEL INJECTION” to ±25%.

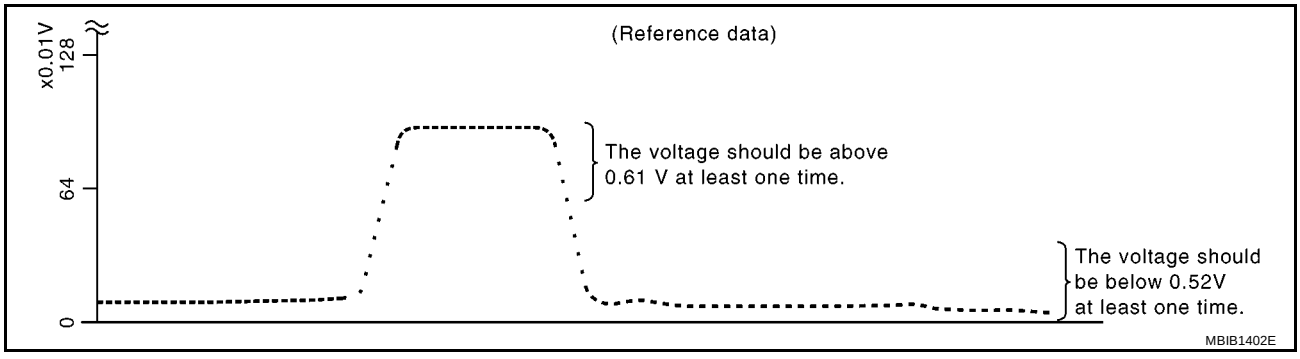

“HO2S2 (B1)” should be above 0.61V at least once when the “FUEL INJECTION” is +25%.
“HO2S2 (B1)” should be below 0.52V at least once when the “FUEL INJECTION” is –25%.

CAUTION:

- **Discard any heated oxygen sensor which has been dropped from a height of more than 0.5 m (19.7 in) onto a hard surface such as a concrete floor; use a new one.**
- **Before installing new oxygen sensor, clean exhaust system threads using Oxygen Sensor Thread Cleaner and approved anti-seize lubricant.**

Without CONSULT-II

1. Start engine and warm it up to the normal operating temperature.
2. Turn ignition switch OFF and wait at least 10 seconds.
3. Start engine and keep the engine speed between 3,500 and 4,000 rpm for at least 1 minute under no load.
4. Let engine idle for 1 minute.
5. Set voltmeter probes between ECM terminal 16 (HO2S2 signal) and ground.

6. Check the voltage when revving up to 4,000 rpm under no load at least 10 times.
   (Depress and release accelerator pedal as soon as possible.)
   The voltage should be above 0.61V at least once during this procedure.
   If the voltage is above 0.61V at step 6, step 7 is not necessary.
7. Keep vehicle idling for 10 minutes, then check voltage. Or check the voltage when coasting from 80 km/h (50 MPH) in 3rd gear position.
   The voltage should be below 0.52V at least once during this procedure.

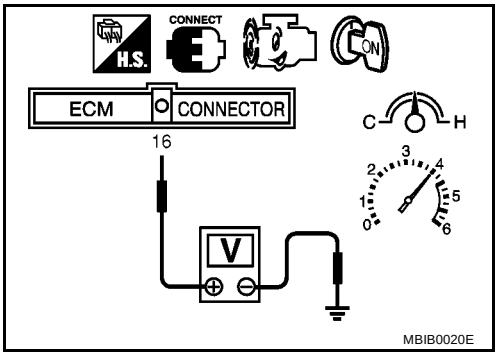

8. If NG, replace heated oxygen sensor 2.

CAUTION:

- **Discard any heated oxygen sensor which has been dropped from a height of more than 0.5 m (19.7 in) onto a hard surface such as a concrete floor; use a new one.**
- **Before installing new oxygen sensor, clean exhaust system threads using Oxygen Sensor Thread Cleaner and approved anti-seize lubricant.**

Removal and Installation

BBS0037I

HEATED OXYGEN SENSOR 2

Refer to EX-3, "EXHAUST SYSTEM" .

DTC P0222, P0223 TP SENSOR

PFP:16119

Component Description

BBS0037J

Electric throttle control actuator consists of throttle control motor, throttle position sensor, etc. the throttle position sensor responds to the throttle valve movement.
The throttle position sensor has the two sensors. These sensors are a kind of potentiometers which transform the throttle valve position into output voltage, and emit the voltage signal to the ECM. In addition, these sensors detect the opening and closing speed of the throttle valve and feed the voltage signals to the ECM. The ECM judges the current opening angle of the throttle valve from these signals and the ECM controls the throttle control motor to make the throttle valve opening angle properly in response to driving condition.

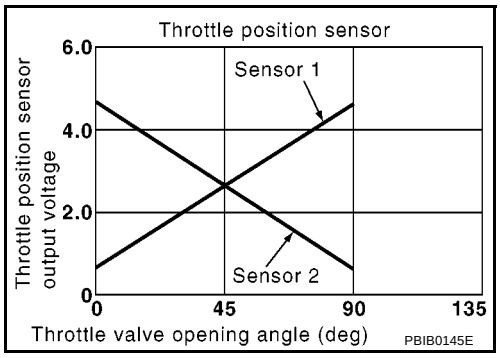

CONSULT-II Reference Value in Data Monitor Mode

BBS0037K

Specification data are reference values.

MONITOR ITEM	CONDITION		SPECIFICATION
THRTL SEN 1 THRTL SEN 2*	● Ignition switch: ON (Engine stopped)	Accelerator pedal: Fully released	More than 0.36V
	● Shift lever: 1st	Accelerator pedal: Fully depressed	Less than 4.75V

*: Throttle position sensor 2 signal is converted by ECM internally. Thus, it differs from ECM terminal voltage signal.

On Board Diagnosis Logic

BBS0037L

These self-diagnoses have the one trip detection logic.

DTC No.	Trouble diagnosis name	DTC detecting condition	Possible cause
P0222 0222	Throttle position sensor 1 circuit low input	An excessively low voltage from the TP sensor 1 is sent to ECM.	● Harness or connectors (TP sensor 1 circuit is open or shorted.) (APP sensor 2 circuit is shorted.) ● Electric throttle control actuator (TP sensor 1) ● Accelerator pedal position sensor (APP sensor 2)
P0223 0223	Throttle position sensor 1 circuit high input	An excessively high voltage from the TP sensor 1 is sent to ECM.	

FAIL-SAFE MODE

When the malfunction is detected, the ECM enters fail-safe mode and the MI lights up.

Engine operation condition in fail-safe mode
The ECM controls the electric throttle control actuator in regulating the throttle opening in order for the idle position to be within +10 degrees. The ECM regulates the opening speed of the throttle valve to be slower than the normal condition. So, the acceleration will be poor.

DTC Confirmation Procedure

BBS0037M

NOTE:
If DTC Confirmation Procedure has been previously conducted, always turn ignition switch OFF and wait at least 10 seconds before conducting the next test.
TESTING CONDITION:
Before performing the following procedure, confirm that battery voltage is more than 10V at idle.

WITH CONSULT-II

1. Turn ignition switch ON.
2. Select “DATA MONITOR” mode with CONSULT-II.
3. Start engine and let it idle for 1 second.
4. If DTC is detected, go to EC-601, "Diagnostic Procedure" .

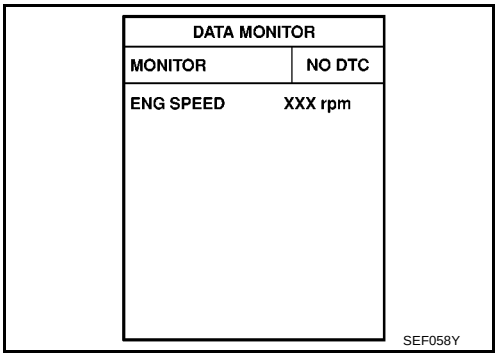

WITHOUT CONSULT-II

1. Start engine and let it idle for 1 second.
2. Turn ignition switch OFF, wait at least 10 seconds and then turn ON.
3. Perform Diagnostic Test Mode II (Self-diagnostic results) with ECM.
4. If DTC is detected, go to EC-601, "Diagnostic Procedure" .

Wiring Diagram

BBS0037N

EC-TPS1-01

: DETECTABLE LINE FOR DTC
: NON-DETECTABLE LINE FOR DTC

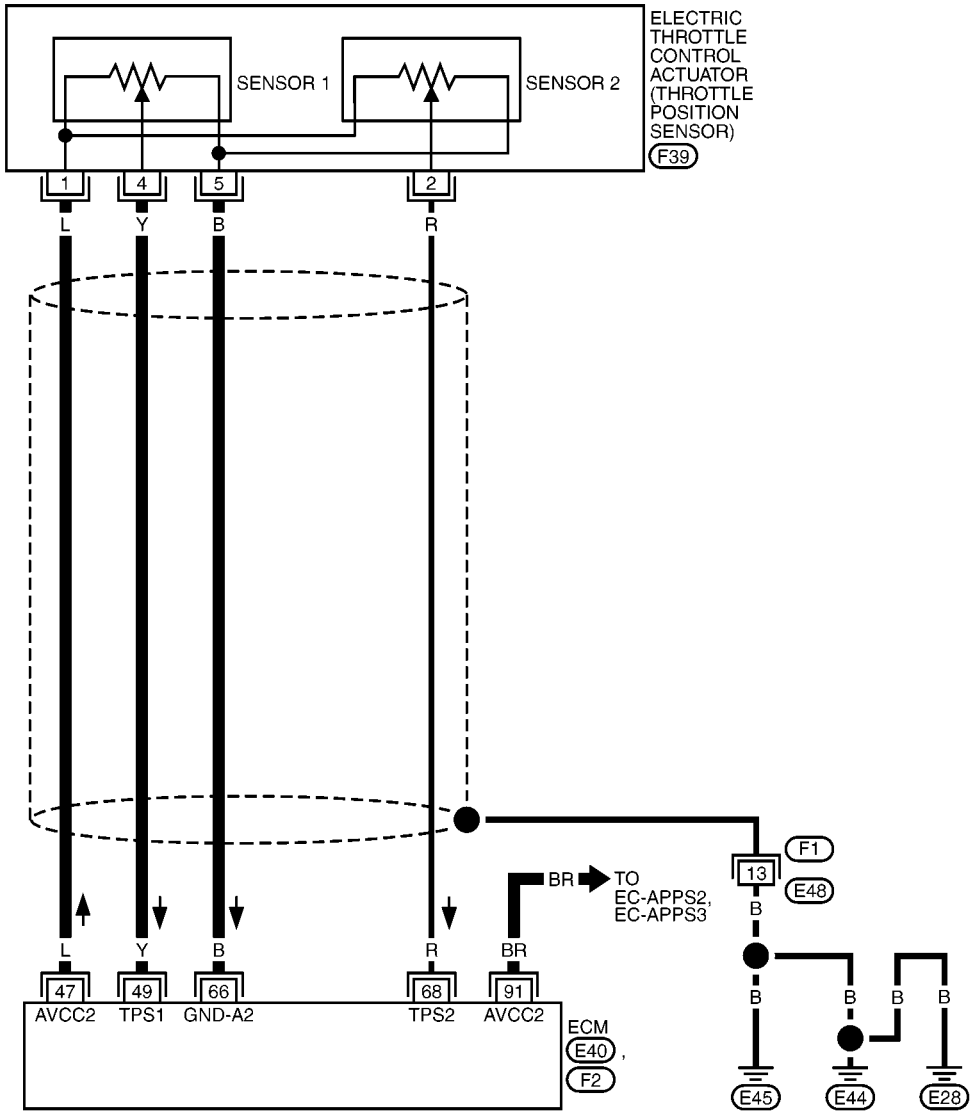

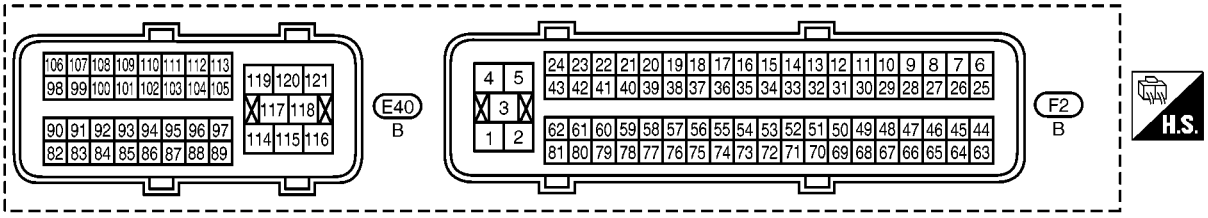

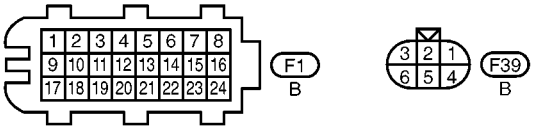

MBWA1513E

Specification data are reference values and are measured between each terminal and ground.

CAUTION:

Do not use ECM ground terminals when measuring input/output voltage. Doing so may result in damage to the ECM's transistor. Use a ground other than ECM terminals, such as the ground.

TERMINAL NO.	WIRE COLOR	ITEM	CONDITION	DATA (DC Voltage)
47	L	Sensor power supply (Throttle position sensor)	**[Ignition switch: ON]**	Approximately 5V
49	Y	Throttle position sensor 1	**[Ignition switch: ON]** ● **Engine stopped** ● Shift lever position: 1st ● Accelerator pedal: Fully released	More than 0.36V
			[Ignition switch: ON] ● **Engine stopped** ● Shift lever position: 1st ● Accelerator pedal: Fully depressed	Less than 4.75V
66	B	Sensor ground (Throttle position sensor)	**[Engine is running]** ● **Warm-up condition** ● Idle speed	Approximately 0V
68	R	Throttle position sensor 2	**[Ignition switch: ON]** ● **Engine stopped** ● Shift lever position: 1st ● Accelerator pedal: Fully released	Less than 4.75V
			[Ignition switch: ON] ● **Engine stopped** ● Shift lever position: 1st ● Accelerator pedal: Fully depressed	More than 0.36V
91	BR	Sensor power supply (APP sensor 2)	**[Ignition switch ON]**	Approximately 5V

Diagnostic Procedure

BBS0037O

1. RETIGHTEN GROUND CONNECTIONS

1. Turn ignition switch OFF.
2. Loosen and retighten ground screws on the body.
   Refer to EC-548, "Ground Inspection" .

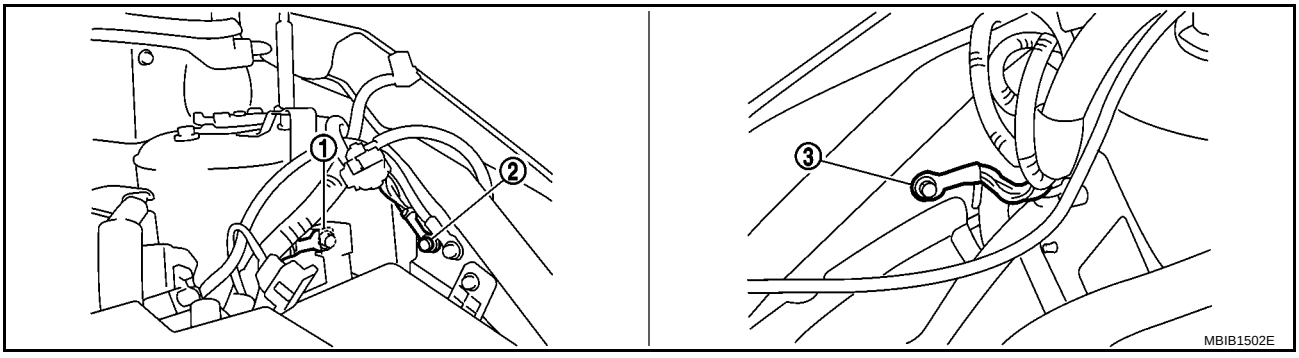

1. Body ground E44
2. Body ground E45
3. Body ground E28

OK or NG

OK >> GO TO 2.
NG >> Repair or replace ground connections.

2. CHECK THROTTLE POSITION SENSOR 1 POWER SUPPLY CIRCUIT-I

1. Disconnect electric throttle control actuator harness connector.
2. Turn ignition switch ON.

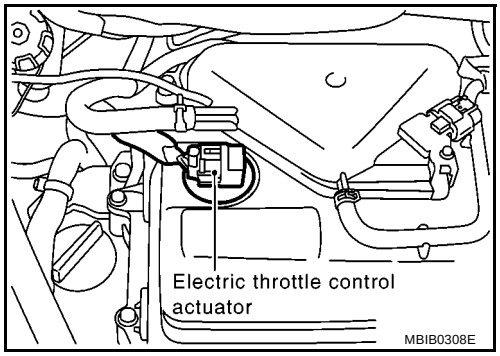

3. Check voltage between electric throttle control actuator terminal 1 and ground with CONSULT-II or tester.

Voltage: Approximately 5V

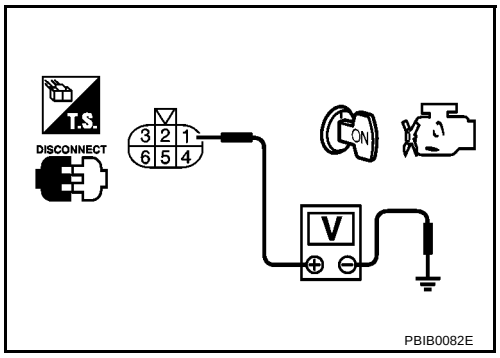

OK or NG

OK >> GO TO 7.
NG >> GO TO 3.

3. CHECK THROTTLE POSITION SENSOR 1 POWER SUPPLY CIRCUIT-II

1. Turn ignition switch OFF.
2. Disconnect ECM harness connector.
3. Check harness continuity between electric throttle control actuator terminal 1 and ECM terminal 47. Refer to Wiring Diagram.

Continuity should exist.

OK or NG

OK >> GO TO 4.
NG >> Repair open circuit.

4. CHECK THROTTLE POSITION SENSOR 1 POWER SUPPLY CIRCUIT-III

Check harness for short to power and short to ground, between the following terminals.

ECM terminal	Sensor terminal	Reference Wiring Diagram
47	Electric throttle control actuator terminal 1	EC-600
91	APP sensor terminal 5	EC-710

OK or NG

OK >> GO TO 5.
NG >> Repair short to ground or short to power in harness or connectors.

5. CHECK APP SENSOR

Refer to EC-716, "Component Inspection" .

OK or NG

OK >> GO TO 11.
NG >> GO TO 6.

6. REPLACE ACCELERATOR PEDAL ASSEMBLY

1. Replace accelerator pedal assembly.
2. Perform EC-486, "Accelerator Pedal Released Position Learning" .
3. Perform EC-486, "Throttle Valve Closed Position Learning" .
4. Perform EC-486, "Idle Air Volume Learning" .

>> **INSPECTION END**

7. CHECK THROTTLE POSITION SENSOR 1 GROUND CIRCUIT FOR OPEN AND SHORT

1. Turn ignition switch OFF.
2. Disconnect ECM harness connector.
3. Check harness continuity between ECM terminal 66 and electric throttle control actuator terminal 5. Refer to Wiring Diagram.

Continuity should exist.

4. Also check harness for short to ground and short to power.

OK or NG

OK >> GO TO 8.
NG >> Repair open circuit or short to ground or short to power in harness or connectors.

8. CHECK THROTTLE POSITION SENSOR 1 INPUT SIGNAL CIRCUIT FOR OPEN AND SHORT

1. Check harness continuity between ECM terminal 49 and electric throttle control actuator terminal 4. Refer to Wiring Diagram.

Continuity should exist.

2. Also check harness for short to ground and short to power.

OK or NG

OK >> GO TO 9.
NG >> Repair open circuit or short to ground or short to power in harness or connectors.

9. CHECK THROTTLE POSITION SENSOR

Refer to EC-604, "Component Inspection" .

OK or NG

OK >> GO TO 11.
NG >> GO TO 10.

10. REPLACE ELECTRIC THROTTLE CONTROL ACTUATOR

1. Replace the electric throttle control actuator.
2. Perform EC-486, "Throttle Valve Closed Position Learning" .
3. Perform EC-486, "Idle Air Volume Learning" .

>> **INSPECTION END**

11. CHECK INTERMITTENT INCIDENT

Refer to EC-542, "TROUBLE DIAGNOSIS FOR INTERMITTENT INCIDENT" .

>> **INSPECTION END**

Component Inspection

BBS0037P

THROTTLE POSITION SENSOR

1. Reconnect all harness connectors disconnected.
2. Perform EC-486, "Throttle Valve Closed Position Learning" .
3. Turn ignition switch ON.
4. Set shift lever to 1st position.
5. Check voltage between ECM terminals 49 (TP sensor 1 signal), 68 (TP sensor 2 signal) and ground under the following conditions.

Terminal	Accelerator pedal	Voltage
49 (Throttle position sensor 1)	Fully released	More than 0.36V
	Fully depressed	Less than 4.75V
68 (Throttle position sensor 2)	Fully released	Less than 4.75V
	Fully depressed	More than 0.36V

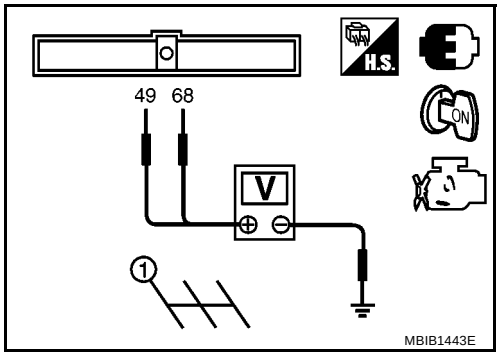

6. If NG, replace electric throttle control actuator and go to the next step.
7. Perform EC-486, "Throttle Valve Closed Position Learning" .
8. Perform EC-486, "Idle Air Volume Learning" .

Removal and Installation

BBS0037Q

ELECTRIC THROTTLE CONTROL ACTUATOR

Refer to EM-18, "AIR CLEANER AND AIR DUCT" .

DTC P0327, P0328 KS

PFP:22060

Component Description

BBS0037R

The knock sensor is attached to the cylinder block. It senses engine knocking using a piezoelectric element. A knocking vibration from the cylinder block is sensed as vibrational pressure. This pressure is converted into a voltage signal and sent to the ECM.

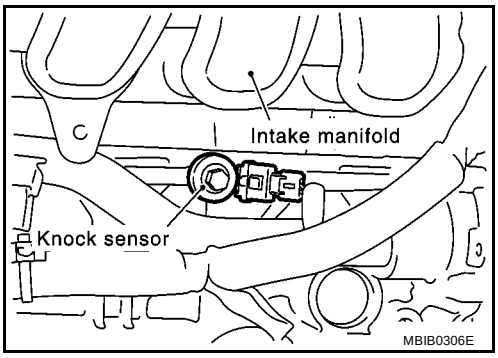

On Board Diagnosis Logic

BBS0037S

The MI will not light up for these self-diagnoses.

DTC No.	Trouble Diagnosis Name	DTC Detected Condition	Possible Cause
P0327 0327	Knock sensor circuit low input	An excessively low voltage from the sensor is sent to ECM.	● Harness or connectors (The sensor circuit is open or shorted.) ● Knock sensor
P0328 0328	Knock sensor circuit high input	An excessively high voltage from the sensor is sent to ECM.	

DTC Confirmation Procedure

BBS0037T

NOTE:
If DTC Confirmation Procedure has been previously conducted, always turn ignition switch OFF and wait at least 10 seconds before conducting the next test.
TESTING CONDITION:
Before performing the following procedure, confirm that battery voltage is more than 10V at idle.

WITH CONSULT-II

1. Turn ignition switch ON and select “DATA MONITOR” mode with CONSULT-II.
2. Start engine and run it for at least 5 seconds at idle speed.
3. If 1st trip DTC is detected, go to EC-607, "Diagnostic Procedure" .

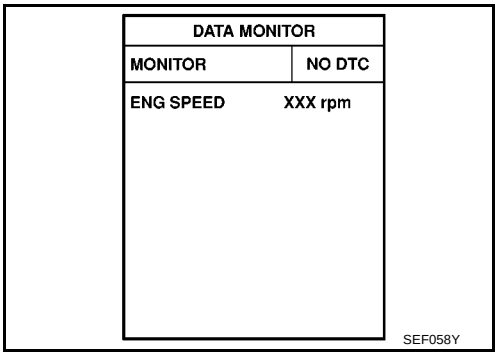

WITHOUT CONSULT-II

1. Start engine and run it for at least 5 seconds at idle speed.
2. Turn ignition switch OFF, wait at least 10 seconds and then turn ON.
3. Perform Diagnostic Test Mode II (Self-diagnostic results) with ECM.
4. If 1st trip DTC is detected, go to EC-607, "Diagnostic Procedure" .

Wiring Diagram

BBS0037U

EC-KS-01

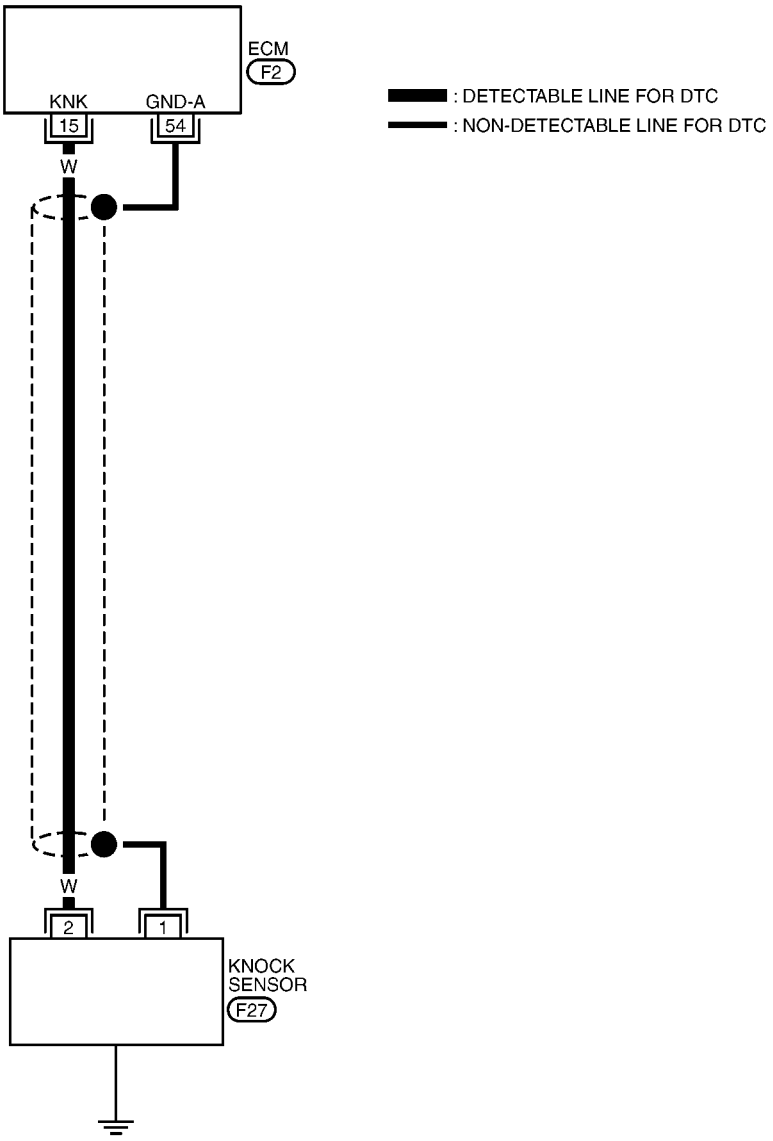

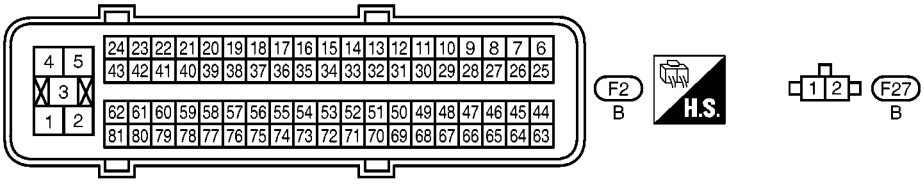

MBWA0571E

Specification data are reference values and are measured between each terminal and ground.

CAUTION:
Do not use ECM ground terminals when measuring input/output voltage. Doing so may result in damage to the ECM's transistor. Use a ground other than ECM terminals, such as the ground.

TERMINAL NO.	WIRE COLOR	ITEM	CONDITION	DATA (DC Voltage)
15	W	Knock sensor	**[Engine is running]** ● Idle speed	Approximately 2.5V
54	—	Sensor ground (Knock sensor)	**[Engine is running]** ● **Warm-up condition** ● Idle speed	Approximately 0V

Diagnostic Procedure

BBS0037V

1. CHECK KNOCK SENSOR INPUT SIGNAL CIRCUIT-I

1. Turn ignition switch OFF.
2. Disconnect ECM harness connector.
3. Check resistance between ECM terminal 15 and ground. Refer to Wiring Diagram.

   NOTE:
   It is necessary to use an ohmmeter which can measure more than 10 MΩ.

   Resistance: Approximately 530 - 590kΩ [at 20°C (68°F)]

4. Also check harness for short to ground and short to power.

OK or NG

OK >> GO TO 4.
NG >> GO TO 2.

2. CHECK KNOCK SENSOR INPUT SIGNAL CIRCUIT-II

1. Disconnect knock sensor harness connector.
2. Check harness continuity between ECM terminal 15 and knock sensor terminal 2.
   Refer to Wiring Diagram.

   Continuity should exist.

3. Also check harness for short to ground and short to power.

OK or NG

OK >> GO TO 3.
NG >> Repair open circuit or short to ground or short to power in harness or connectors.

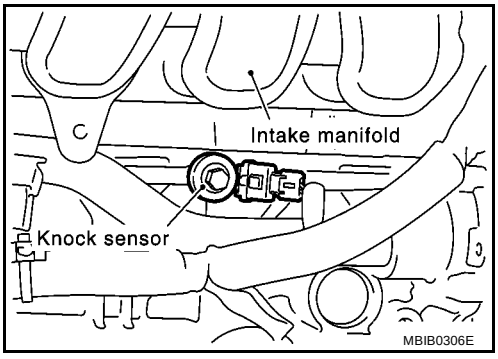

3. CHECK KNOCK SENSOR

Refer to EC-608, "Component Inspection" .

OK or NG

OK >> GO TO 6.
NG >> Replace knock sensor.

4. CHECK GROUND CONNECTIONS

1. Loosen and retighten ground screws on the body.
   Refer to EC-548, "Ground Inspection" .

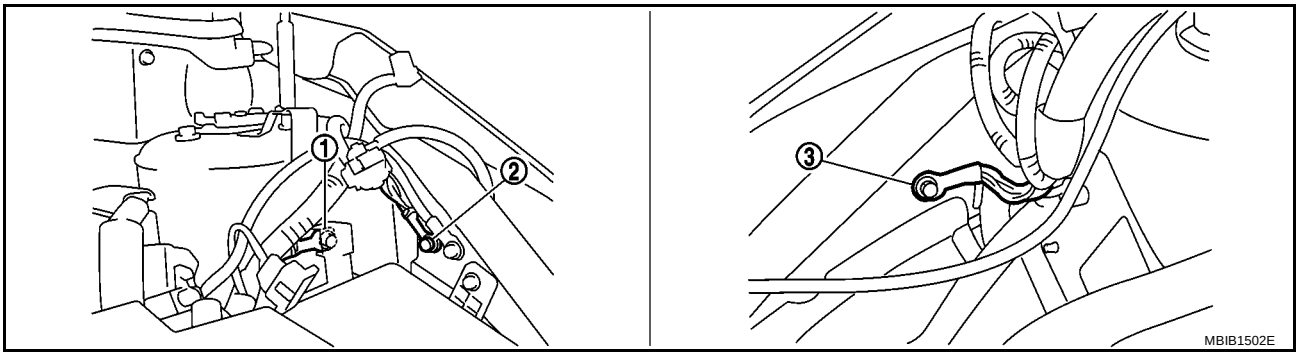

1. Body ground E44
2. Body ground E45
3. Body ground E28

OK or NG

OK >> GO TO 5.
NG >> Repair or replace ground connections.

5. CHECK KNOCK SENSOR SHIELD CIRCUIT FOR OPEN AND SHORT

1. Check harness continuity between ECM terminal 54 and knock sensor terminal 1.
   Refer to Wiring Diagram.

   Continuity should exist

2. Also check harness for short to ground and short to power.

OK or NG

OK >> GO TO 6.
NG >> Repair open circuit or short to ground or short to power in harness or connectors.

6. CHECK INTERMITTENT INCIDENT

Refer to EC-542, "TROUBLE DIAGNOSIS FOR INTERMITTENT INCIDENT" .

>> **INSPECTION END**

Component Inspection

BBS0037W

KNOCK SENSOR

Check resistance between knock sensor terminal 2 and ground.

NOTE:
It is necessary to use an ohmmeter which can measure more than 10 MΩ.

Resistance: Approximately 530 - 590kΩ [at 20°C (68°F)]

CAUTION:
Do not use any knock sensors that have been dropped or physically damaged. Use only new ones.

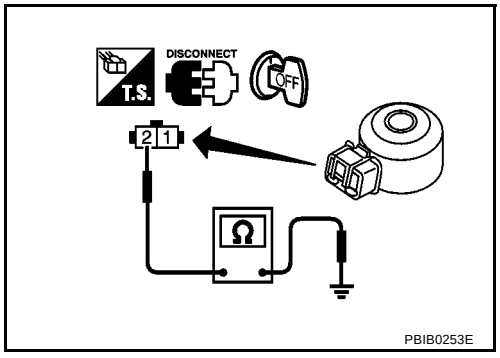

Removal and Installation

BBS0037X

KNOCK SENSOR

Refer to EM-74, "CYLINDER BLOCK" .

DTC P0335 CKP SENSOR (POS)

PFP:23731

Component Description

BBS0037Y

The crankshaft position sensor (POS) is located on the cylinder block rear housing facing the gear teeth (cogs) of the signal plate at the end of the crankshaft. It detects the fluctuation of the engine revolution.
The sensor consists of a permanent magnet and Hall IC.
When the engine is running, the high and low parts of the teeth cause the gap with the sensor to change.
The changing gap causes the magnetic field near the sensor to change.
Due to the changing magnetic field, the voltage from the sensor changes.
The ECM receives the voltage signal and detects the fluctuation of the engine revolution.
ECM receives the signals as shown in the figure.

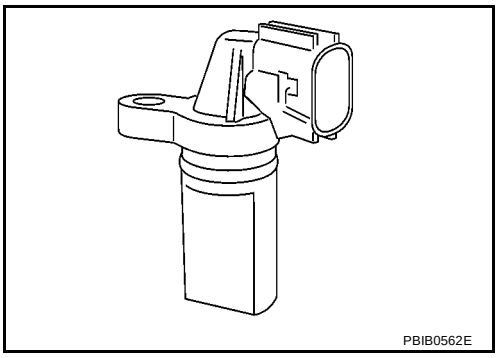

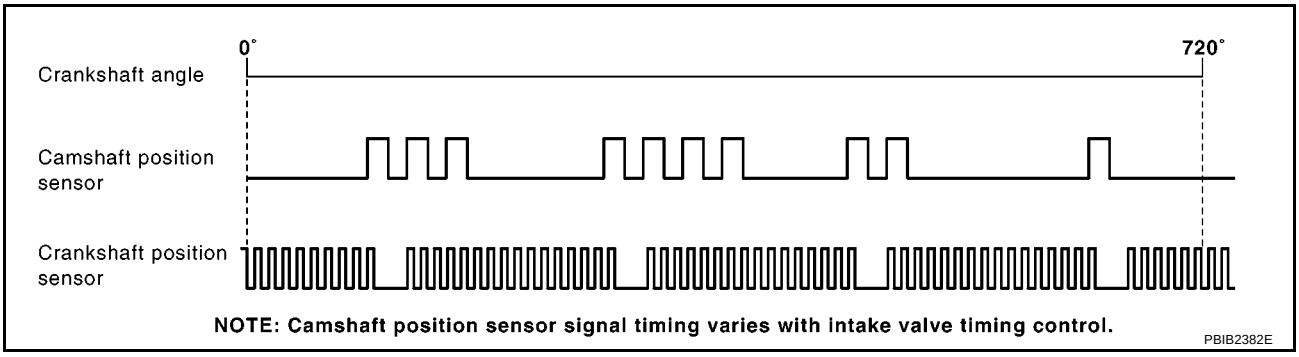

CONSULT-II Reference Value in Data Monitor Mode

BBS0037Z

Specification data are reference values.

MONITOR ITEM	CONDITION	SPECIFICATION
ENG SPEED	● Run engine and compare CONSULT-II value with the tachometer indication.	Almost the same speed as the tachometer indication.

On Board Diagnosis Logic

BBS00380

DTC No.	Trouble diagnosis name	DTC detecting condition	Possible cause
P0335 0335	Crankshaft position sensor (POS) circuit	● The crankshaft position sensor (POS) signal is not detected by the ECM during the first few seconds of engine cranking. ● The proper pulse signal from the crankshaft position sensor (POS) is not sent to ECM while the engine is running. ● The crankshaft position sensor (POS) signal is not in the normal pattern during engine running.	● Harness or connectors (The sensor circuit is open or shorted.) ● Crankshaft position sensor (POS) ● Signal plate

DTC Confirmation Procedure

BBS00381

NOTE:
If DTC Confirmation Procedure has been previously conducted, always turn ignition switch OFF and wait at least 10 seconds before conducting the next test.
TESTING CONDITION:
Before performing the following procedure, confirm that battery voltage is more than 10.5V with ignition switch ON.

WITH CONSULT-II

1. Turn ignition switch ON and select “DATA MONITOR” mode with CONSULT-II.
2. Crank engine for at least 2 seconds and run it for at least 5 seconds at idle speed.
3. If 1st trip DTC is detected, go to EC-613, "Diagnostic Procedure" .

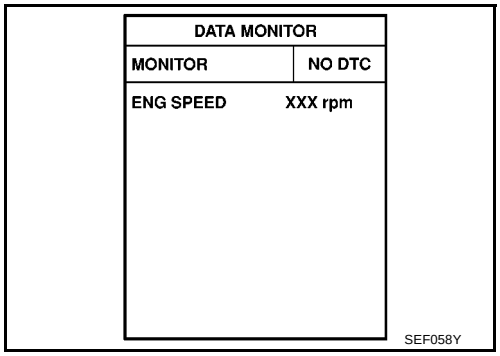

WITHOUT CONSULT-II

1. Crank engine for at least 2 seconds and run it for at least 5 seconds at idle speed.
2. Turn ignition switch OFF, wait at least 10 seconds and then turn ON.
3. Perform Diagnostic Test Mode II (Self-diagnostic results) with ECM.
4. If 1st trip DTC is detected, go to EC-613, "Diagnostic Procedure" .

Wiring Diagram

BBS00382

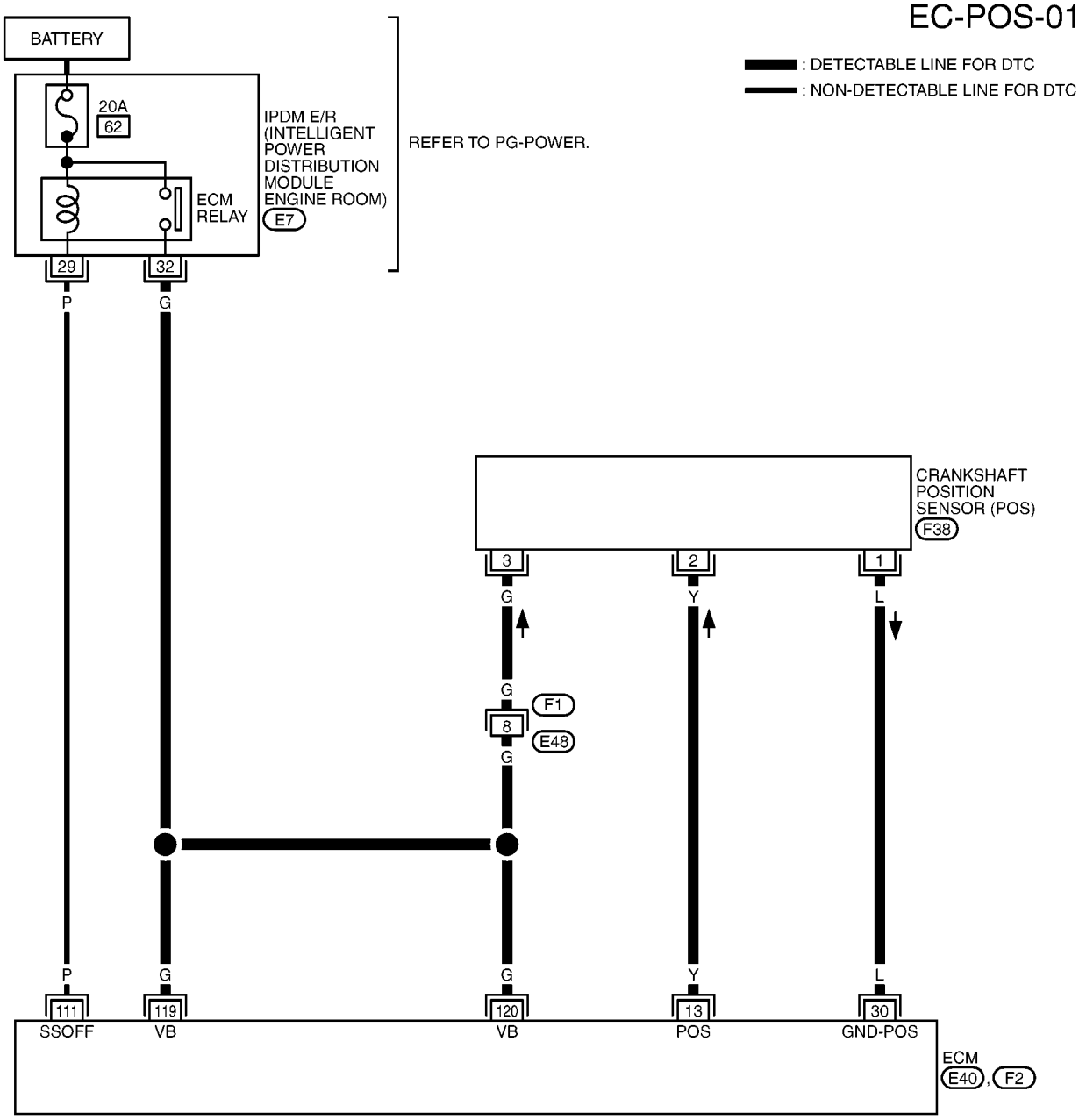

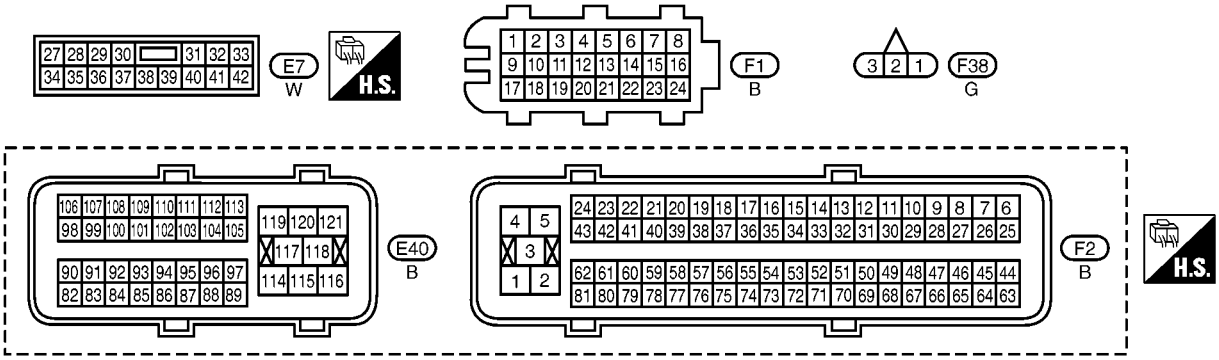

MBWA1515E

Specification data are reference values and are measured between each terminal and ground.
Pulse signal is measured by CONSULT-II.

CAUTION:

Do not use ECM ground terminals when measuring input/output voltage. Doing so may result in damage to the ECM's transistor. Use a ground other than ECM terminals, such as the ground.

TERMINAL NO.	WIRE COLOR	ITEM	CONDITION	DATA (DC Voltage)
13	Y	Crankshaft position sensor (POS)	**[Engine is running]** ● **Warm-up condition** ● Idle speed **NOTE:** The pulse cycle changes depending on rpm at idle.	Approximately 3.0V★ 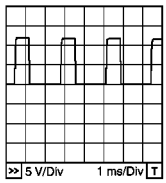 PBIB0527E
			[Engine is running] ● Engine speed: 2,000 rpm	Approximately 3.0V★ 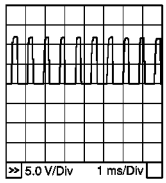 PBIB0528E
30	L	Sensor ground (Crankshaft position sensor)	**[Engine is running]** ● **Warm-up condition** ● Idle speed	Approximately 0V
111	P	ECM relay (Self shut-off)	**[Engine is running]** **[Ignition switch: OFF]** ● For a few seconds after turning ignition switch OFF	0 - 1.0V
			[Ignition switch: OFF] ● More than a few seconds passed after turning ignition switch OFF	BATTERY VOLTAGE (11 - 14V)
119 120	G G	Power supply for ECM	**[Ignition switch: ON]**	BATTERY VOLTAGE (11 - 14V)

★: Average voltage for pulse signal (Actual pulse signal can be confirmed by oscilloscope.)

Diagnostic Procedure

BBS00383

1. CHECK GROUND CONNECTIONS

1. Turn ignition switch OFF.
2. Loosen and retighten ground screws on the body.
   Refer to EC-548, "Ground Inspection" .

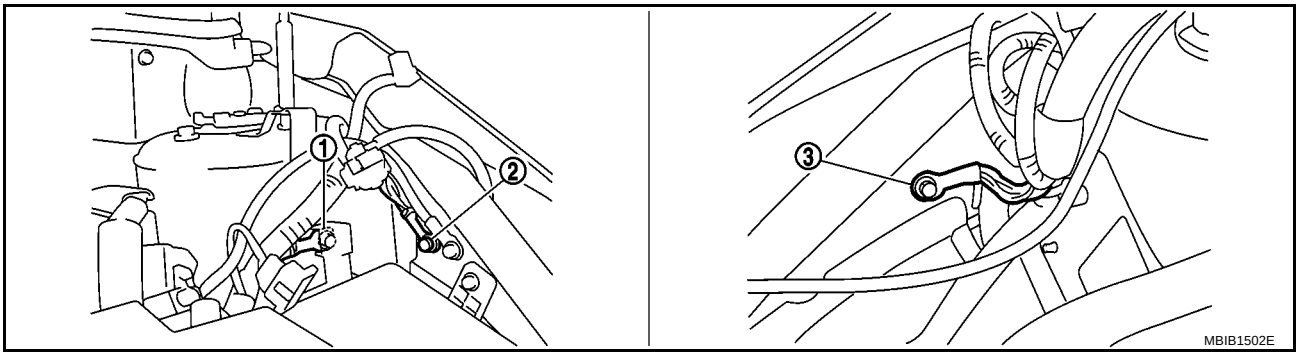

1. Body ground E44
2. Body ground E45
3. Body ground E28

OK or NG

OK >> GO TO 2.
NG >> Repair or replace ground connections.

2. CHECK CRANKSHAFT POSITION (CKP) SENSOR (POS) POWER SUPPLY CIRCUIT

1. Disconnect crankshaft position (CKP) sensor (POS) harness connector.
2. Turn ignition switch ON.

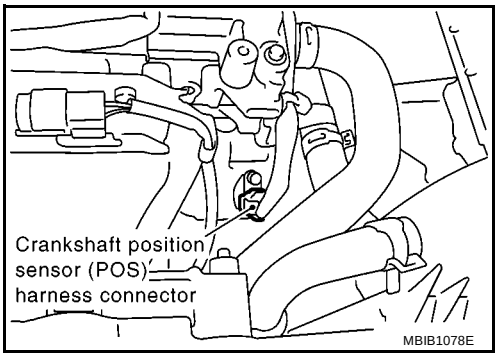

3. Check voltage between CKP sensor (POS) terminal 3 and ground with CONSULT-II or tester.

   Voltage: Battery voltage

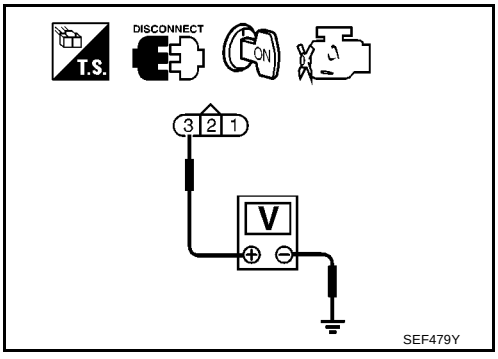

OK or NG

OK >> GO TO 4.
NG >> GO TO 3.

3. DETECT MALFUNCTIONING PART

Check the following.

- Harness connectors F1, E48
- Harness for open or short between crankshaft position sensor (POS) and ECM
- Harness for open or short between crankshaft position sensor (POS) and IPDM E/R

>> Repair open circuit or short to ground or short to power in harness or connectors.

4. CHECK CKP SENSOR (POS) GROUND CIRCUIT FOR OPEN AND SHORT

1. Turn ignition switch OFF.
2. Disconnect ECM harness connector.
3. Check harness continuity between ECM terminal 30 and CKP sensor (POS) terminal 1.
   Refer to Wiring Diagram.

   Continuity should exist.

4. Also check harness for short to ground and short to power.

OK or NG

OK >> GO TO 5.
NG >> Repair open circuit or short to ground or short to power in harness or connectors.

5. CHECK CKP SENSOR (POS) INPUT SIGNAL CIRCUIT FOR OPEN AND SHORT

1. Check harness continuity between ECM terminal 13 and CKP sensor (POS) terminal 2.
   Refer to Wiring Diagram.

   Continuity should exist.

2. Also check harness for short to ground and short to power.

OK or NG

OK >> GO TO 6.
NG >> Repair open circuit or short to ground or short to power in harness or connectors.

6. CHECK CRANKSHAFT POSITION SENSOR (POS)

Refer to EC-615, "Component Inspection" .

OK or NG

OK >> GO TO 7.
NG >> Replace crankshaft position sensor (POS).

7. CHECK GEAR TOOTH

Visually check for chipping signal plate gear tooth.

OK or NG

OK >> GO TO 8.
NG >> Replace the signal plate.

8. CHECK INTERMITTENT INCIDENT

Refer to EC-542, "TROUBLE DIAGNOSIS FOR INTERMITTENT INCIDENT" .

>> **INSPECTION END**

Component Inspection

BBS00384

CRANKSHAFT POSITION SENSOR (POS)

1. Loosen the fixing bolt of the sensor.
2. Disconnect crankshaft position sensor (POS) harness connector.
3. Remove the sensor.
4. Visually check the sensor for chipping.

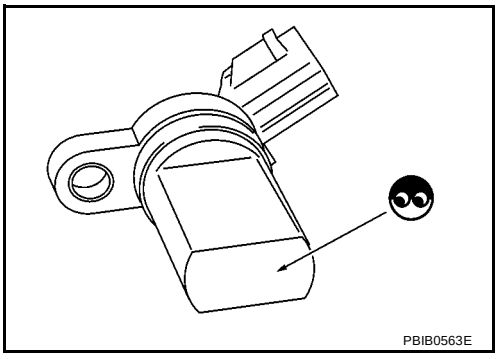

5. Check resistance as shown in the figure.

Terminal No. (Polarity)	Resistance Ω [at 25°C (77°F)]
3 (+) - 1 (-)	Except 0 or ∞
3 (+) - 2 (-)	
2 (+) - 1 (-)	

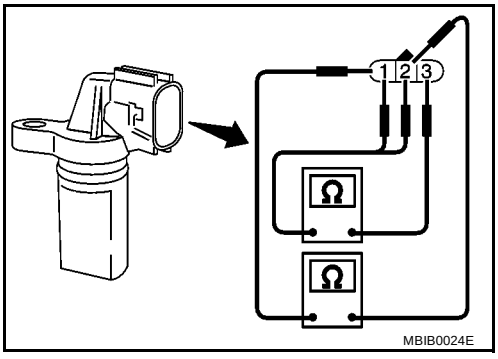

6. If NG, replace crankshaft position sensor (POS).

Removal and Installation

BBS00385

CRANKSHAFT POSITION SENSOR (POS)

Refer to EM-74, "CYLINDER BLOCK" .

DTC P0340 CMP SENSOR (PHASE)

PFP:23731

Component Description

BBS00386

The camshaft position sensor (PHASE) senses the retraction with camshaft (intake) to identify a particular cylinder. The camshaft position sensor (PHASE) senses the piston position.
When the crankshaft position sensor (POS) system becomes inoperative, the camshaft position sensor (PHASE) provides various controls of engine parts instead, utilizing timing of cylinder identification signals.
The sensor consists of a permanent magnet and Hall IC.
When engine is running, the high and low parts of the teeth cause the gap with the sensor to change.
The changing gap causes the magnetic field near the sensor to change.
Due to the changing magnetic field, the voltage from the sensor changes.
ECM receives the signals as shown in the figure.

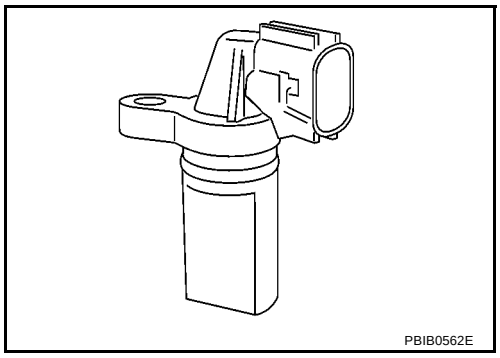

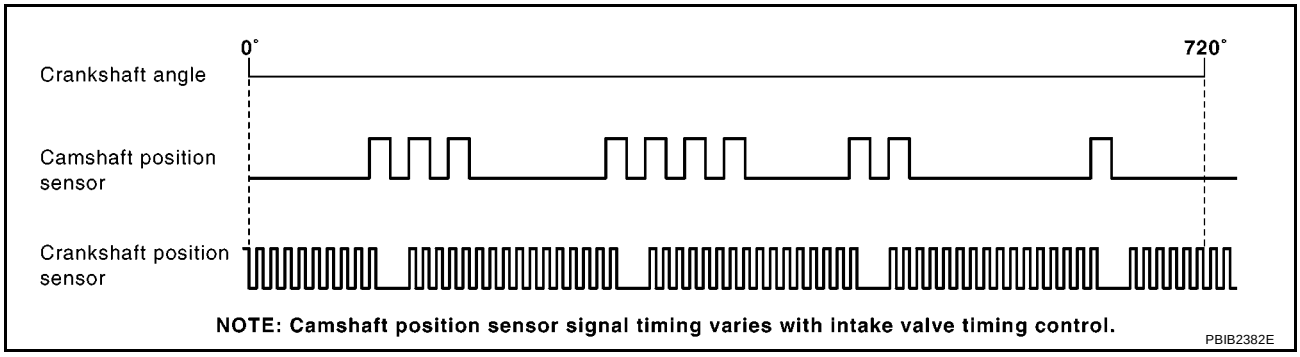

On Board Diagnosis Logic

BBS00387

DTC No.	Trouble diagnosis name	DTC detecting condition	Possible cause
P0340 0340	Camshaft position sensor (PHASE) circuit	● The cylinder No. signal is not sent to ECM for the first few seconds during engine cranking. ● The cylinder No. signal is not set to ECM during engine running. ● The cylinder No. signal is not in the normal pattern during engine running.	● Harness or connectors (The sensor circuit is open or shorted.) ● Camshaft position sensor (PHASE) ● Camshaft (Intake) ● Starter motor (Refer to SC-45 .) ● Starting system circuit (Refer to SC-45 .) ● Dead (Weak) battery

DTC Confirmation Procedure

BBS00388

NOTE:
If DTC Confirmation Procedure has been previously conducted, always turn ignition switch OFF and wait at least 10 seconds before conducting the next test.
TESTING CONDITION:
Before performing the following procedure, confirm that battery voltage is more than 10.5V with ignition switch ON.

WITH CONSULT-II

1. Turn ignition switch ON.

2. Select “DATA MONITOR” mode with CONSULT-II.
3. Crank engine for at least 2 seconds and run it for at least 5 seconds at idle speed.
4. If 1st trip DTC is detected, go to EC-619, "Diagnostic Procedure" .
   If 1st trip DTC is not detected, go to next step.
5. Maintain engine speed at more than 800 rpm for at least 5 seconds.
6. If 1st trip DTC is detected, go to EC-619, "Diagnostic Procedure" .

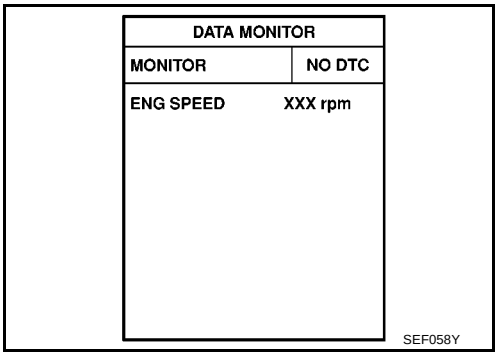

WITHOUT CONSULT-II

1. Crank engine for at least 2 seconds and run it for at least 5 seconds at idle speed.
2. Turn ignition switch OFF, wait at least 10 seconds and then turn ON.
3. Perform Diagnostic Test Mode II (Self-diagnostic results) with ECM.
4. If 1st trip DTC is detected, go to EC-619, "Diagnostic Procedure" .
   If 1st trip DTC is not detected, go to next step.
5. Turn ignition switch OFF and wait at least 10 seconds.
6. Start engine and maintain engine speed at more than 800 rpm for at least 5 seconds.
7. Turn ignition switch OFF, wait at least 10 seconds and then turn ON.
8. Perform Diagnostic Test Mode II (Self-diagnostic results) with ECM.
9. If 1st trip DTC is detected, go to EC-619, "Diagnostic Procedure" .

Wiring Diagram

BBS00389

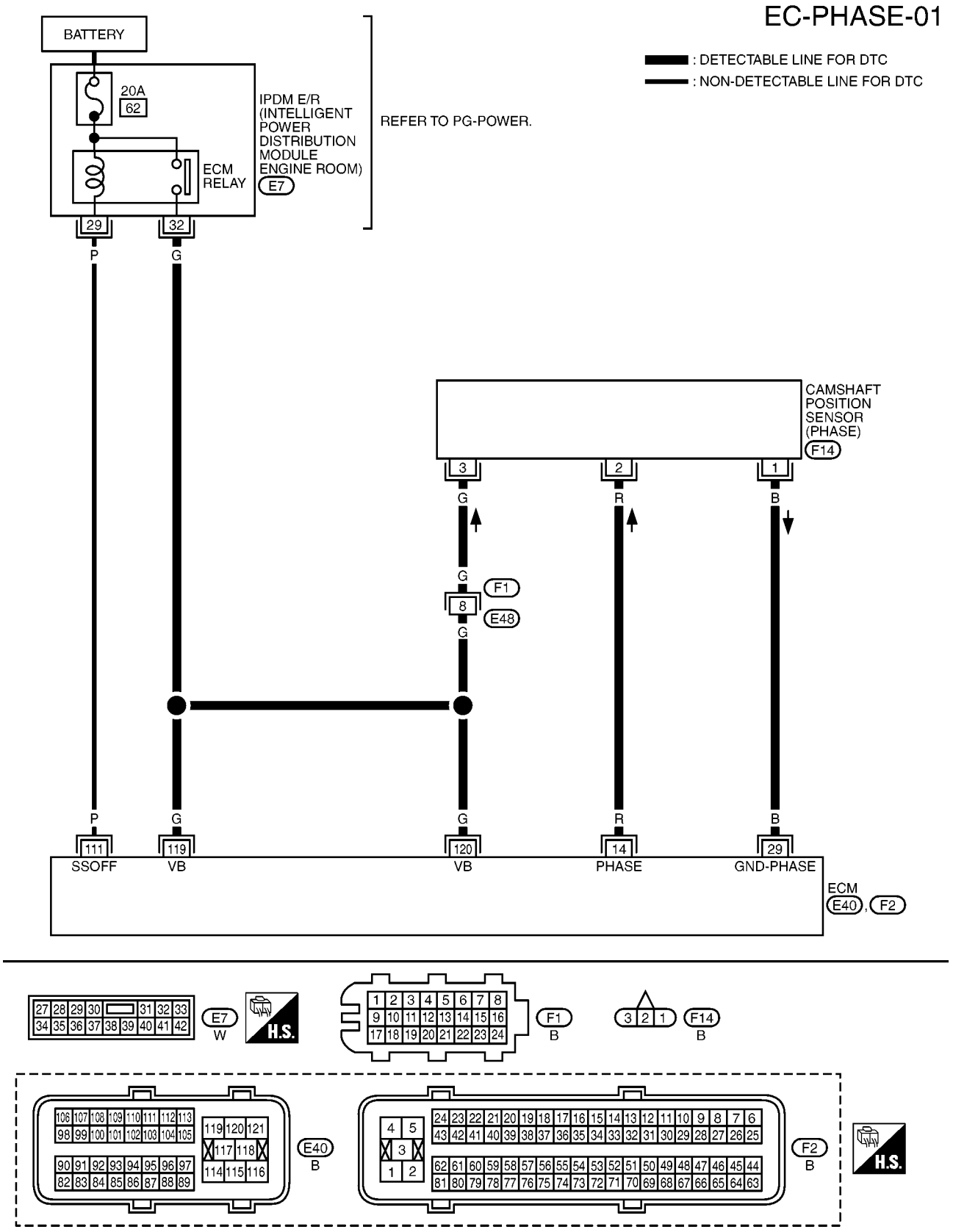

Specification data are reference values and are measured between each terminal and ground.
Pulse signal is measured by CONSULT-II.

CAUTION:
Do not use ECM ground terminals when measuring input/output voltage. Doing so may result in damage to the ECM's transistor. Use a ground other than ECM terminals, such as the ground.

TERMINAL NO.	WIRE COLOR	ITEM	CONDITION	DATA (DC Voltage)
14	R	Camshaft position sensor (PHASE)	**[Engine is running]** ● **Warm-up condition** ● Idle speed **NOTE:** The pulse cycle changes depending on rpm at idle.	1.0 - 4.0V★ 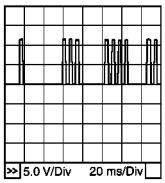 PBIB0525E
			[Engine is running] ● Engine speed: 2,000 rpm	1.0 - 4.0V★ 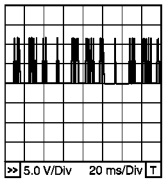 PBIB0526E
29	B	Sensor ground (Camshaft position sensor)	**[Engine is running]** ● **Warm-up condition** ● Idle speed	Approximately 0V
111	P	ECM relay (Self shut-off)	**[Engine is running]** **[Ignition switch: OFF]** ● For a few seconds after turning ignition switch OFF	0 - 1.0V
			[Ignition switch: OFF] ● More than a few seconds passed after turning ignition switch OFF	BATTERY VOLTAGE (11 - 14V)
119 120	G G	Power supply for ECM	**[Ignition switch: ON]**	BATTERY VOLTAGE (11 - 14V)

★: Average voltage for pulse signal (Actual pulse signal can be confirmed by oscilloscope.)

Diagnostic Procedure

BBS0038A

1. CHECK STARTING SYSTEM

Turn ignition switch to START position.

Does the engine turn over?
Does the starter motor operate?

Yes or No

Yes >> GO TO 2.
No >> Check starting system. (Refer to SC-45, "STARTING SYSTEM" .)

2. CHECK GROUND CONNECTIONS

1. Turn ignition switch OFF.
2. Loosen and retighten ground screws on the body.
   Refer to EC-548, "Ground Inspection" .

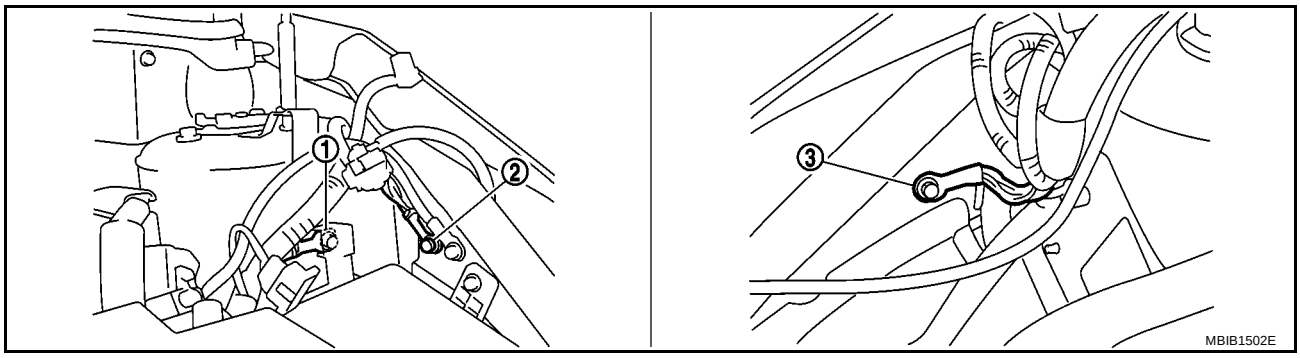

1. Body ground E44
2. Body ground E45
3. Body ground E28

OK or NG

OK >> GO TO 3.
NG >> Repair or replace ground connections.

3. CHECK CAMSHAFT POSITION (CMP) SENSOR (PHASE) POWER SUPPLY CIRCUIT

1. Disconnect camshaft position (CMP) sensor (PHASE) harness connector.
2. Turn ignition switch ON.

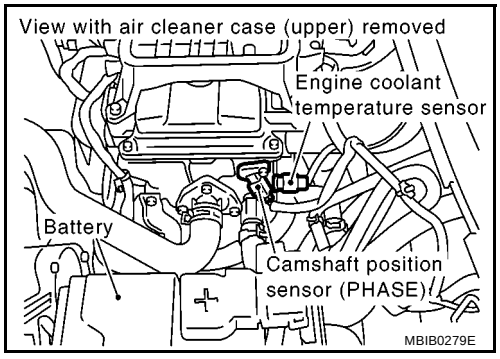

3. Check voltage between CMP sensor (PHASE) terminal 3 and ground with CONSULT-II or tester.

   Voltage: Battery voltage

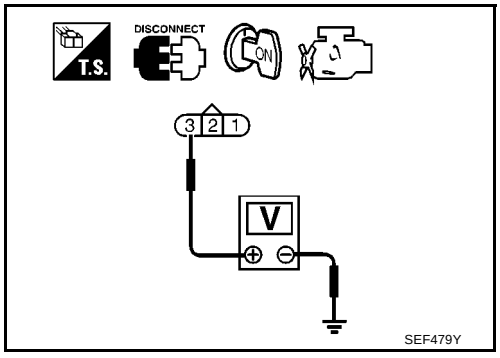

OK or NG

OK >> GO TO 5.
NG >> GO TO 4.

4. DETECT MALFUNCTIONING PART

Check the following.

- Harness connectors F1, E48
- Harness for open or short between camshaft position sensor (PHASE) and ECM
- Harness for open or short between camshaft position sensor (PHASE) and IPDM E/R

>> Repair open circuit or short to ground or short to power in harness or connectors.

5. CHECK CMP SENSOR (PHASE) GROUND CIRCUIT FOR OPEN AND SHORT

1. Turn ignition switch OFF.
2. Disconnect ECM harness connector.
3. Check harness continuity between ECM terminal 29 and CMP sensor (PHASE) terminal 1.
   Refer to Wiring Diagram.

   Continuity should exist.

4. Also check harness for short to ground and short to power.

OK or NG

OK >> GO TO 6.
NG >> Repair open circuit or short to ground or short to power in harness or connectors.

6. CHECK CMP SENSOR (PHASE) INPUT SIGNAL CIRCUIT FOR OPEN AND SHORT

1. Check harness continuity between ECM terminal 14 and CMP sensor (PHASE) terminal 2.
   Refer to Wiring Diagram.

   Continuity should exist.

2. Also check harness for short to ground and short to power.

OK or NG

OK >> GO TO 7.
NG >> Repair open circuit or short to ground or short to power in harness or connectors.

7. CHECK CAMSHAFT POSITION SENSOR (PHASE)

Refer to EC-622, "Component Inspection" .

OK or NG

OK >> GO TO 8.
NG >> Replace camshaft position sensor (PHASE).

8. CHECK CAMSHAFT (INTAKE)

Check the following.

- Accumulation of debris to the signal plate of camshaft rear end
- Chipping signal plate of camshaft rear end

OK or NG

OK >> GO TO 9.
NG >> Remove debris and clean the signal plate of camshaft rear end or replace camshaft.

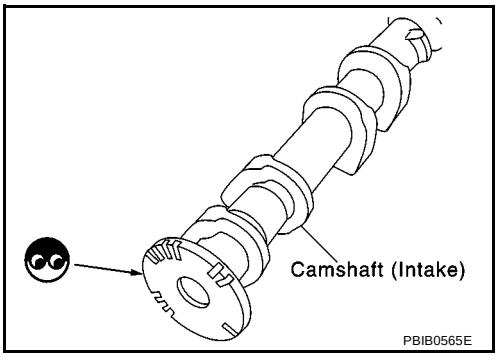

9. CHECK INTERMITTENT INCIDENT

Refer to EC-542, "TROUBLE DIAGNOSIS FOR INTERMITTENT INCIDENT" .

>> **INSPECTION END**

Component Inspection

BBS0038B

CAMSHAFT POSITION SENSOR (PHASE)

1. Loosen the fixing bolt of the sensor.
2. Disconnect camshaft position sensor (PHASE) harness connector.
3. Remove the sensor.
4. Visually check the sensor for chipping.

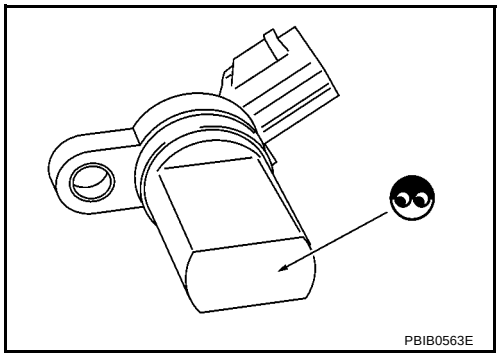

5. Check resistance as shown in the figure.

Terminal No. (Polarity)	Resistance Ω [at 25°C (77°F)]
3 (+) - 1 (-)	Except 0 or ∞
3 (+) - 2 (-)	
2 (+) - 1 (-)	

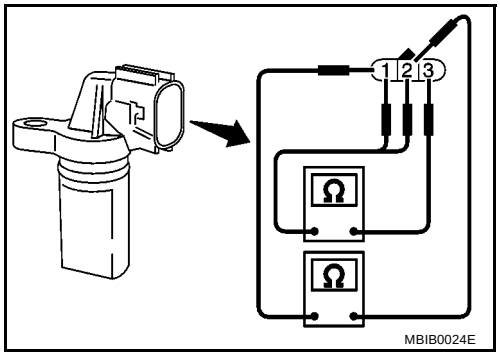

Removal and Installation

BBS0038C

CAMSHAFT POSITION SENSOR (PHASE)

Refer to EM-38, "CAMSHAFT" .

DTC P0605 ECM

PFP:23710

Component Description

BBS0038D

The ECM consists of a microcomputer and connectors for signal input and output and for power supply. The ECM controls the engine.

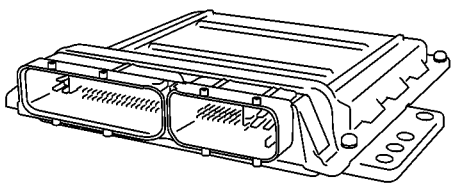

PBIB1164E

On Board Diagnosis Logic

BBS0038E

This self-diagnosis has one or two trip detection logic.

DTC No.	Trouble diagnosis name	DTC detecting condition		Possible cause
P0605 0605	Engine control module	A)	ECM calculation function is malfunctioning.	● ECM
		B)	ECM EEP-ROM system is malfunctioning.	
		C)	ECM self shut-off function is malfunctioning.	

FAIL-SAFE MODE

ECM enters fail-safe mode when malfunction A is detected.

Detected items	Engine operation condition in fail-safe mode
Malfunction A	ECM stops the electric throttle control actuator control, throttle valve is maintained at a fixed opening (approx. 5 degrees) by the return spring.

DTC Confirmation Procedure

BBS0038F

Perform PROCEDURE FOR MALFUNCTION A first. If the DTC cannot be confirmed, perform PROCEDURE FOR MALFUNCTION B. If there is no malfunction on PROCEDURE FOR MALFUNCTION B, perform PROCEDURE FOR MALFUNCTION C.

NOTE:
If DTC Confirmation Procedure has been previously conducted, always turn ignition switch OFF and wait at least 10 seconds before conducting the next test.

PROCEDURE FOR MALFUNCTION A

With CONSULT-II

1. Turn ignition switch ON.
2. Select “DATA MONITOR” mode with CONSULT-II.
3. If 1st DTC is detected, go to EC-625, "Diagnostic Procedure" .

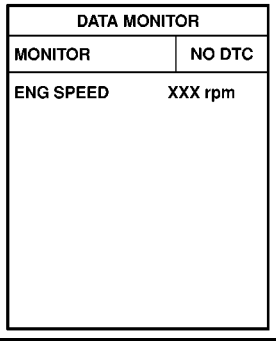

SEF058Y

Without CONSULT-II

1. Turn ignition switch ON.
2. Turn ignition switch OFF, wait at least 10 seconds and then turn ON.
3. Perform Diagnostic Test Mode II (Self-diagnostic results) with ECM.

4. If DTC is detected, go to EC-625, "Diagnostic Procedure" .

PROCEDURE FOR MALFUNCTION B

With CONSULT-II

1. Turn ignition switch ON and wait at least 1 second.
2. Select “DATA MONITOR” mode with CONSULT-II.
3. Turn ignition switch OFF, wait at least 10 seconds, and then turn ON.
4. If 1st trip DTC is detected, go to EC-625, "Diagnostic Procedure" .

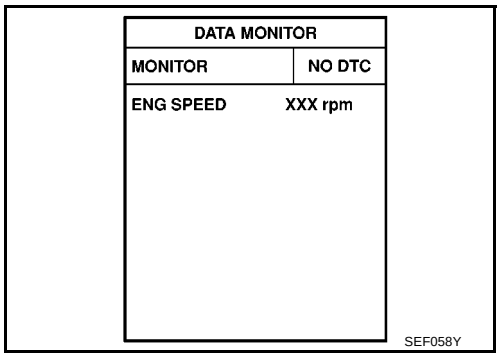

Without CONSULT-II

1. Turn ignition switch ON and wait at least 1 second.
2. Turn ignition switch OFF, wait at least 10 seconds and then turn ON.
3. Perform Diagnostic Test Mode II (Self-diagnostic results) with ECM.
4. If 1st trip DTC is detected, go to EC-625, "Diagnostic Procedure" .

PROCEDURE FOR MALFUNCTION C

With CONSULT-II

1. Turn ignition switch ON and wait at least 1 second.
2. Select “DATA MONITOR” mode with CONSULT-II.
3. Turn ignition switch OFF, wait at least 10 seconds, and then turn ON.
4. Repeat step 3 for 32 times.
5. If 1st trip DTC is detected, go to EC-625, "Diagnostic Procedure" .

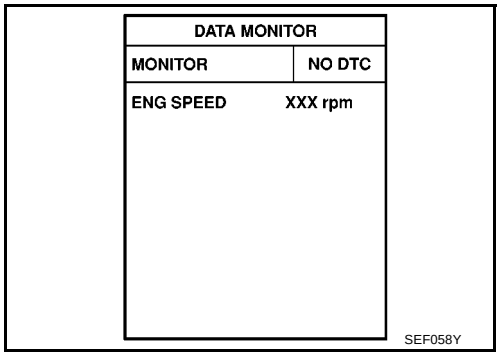

Without CONSULT-II

1. Turn ignition switch ON and wait at least 1 second.
2. Turn ignition switch OFF, wait at least 10 seconds and then turn ON.
3. Repeat step 2 for 32 times.
4. Perform Diagnostic Test Mode II (Self-diagnostic results) with ECM.
5. If 1st trip DTC is detected, go to EC-625, "Diagnostic Procedure" .

Diagnostic Procedure

BBS0038G

1. INSPECTION START

With CONSULT-II

1. Turn ignition switch ON.
2. Select “SELF DIAG RESULTS” mode with CONSULT-II.
3. Touch “ERASE”.
4. **Perform DTC Confirmation Procedure.**
   See EC-623, "DTC Confirmation Procedure" .
5. Is the 1st trip DTC P0605 displayed again?

Without CONSULT-II

1. Turn ignition switch ON.
2. Erase the Diagnostic Test Mode II (Self-diagnostic results) memory. Refer to EC-478, "HOW TO ERASE EMISSION-RELATED DIAGNOSTIC INFORMATION" .
3. **Perform DTC Confirmation Procedure.**
   See EC-623, "DTC Confirmation Procedure" .
4. Is the 1st trip DTC 0605 displayed again?

Yes or No

Yes >> GO TO 2.
No >> **INSPECTION END**

2. REPLACE ECM

1. Replace ECM.
2. Perform initialization of NATS system and registration of all NATS ignition key IDs. Refer to BL-218, "ECM Re-communicating Function" .
3. Perform EC-486, "Accelerator Pedal Released Position Learning" .
4. Perform EC-486, "Throttle Valve Closed Position Learning" .
5. Perform EC-486, "Idle Air Volume Learning" .

>> **INSPECTION END**

DTC P1065 ECM POWER SUPPLY

PFP:23710

Component Description

BBS0038H

Battery voltage is supplied to the ECM even when the ignition switch is turned OFF for the ECM memory function of the DTC memory, the air-fuel ratio feedback compensation value memory, the idle air volume learning value memory, etc.

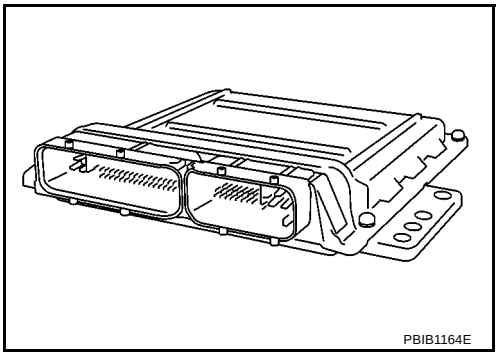

PBIB1164E

On Board Diagnosis Logic

BBS0038I

DTC No.	Trouble diagnosis name	DTC detecting condition	Possible cause
P1065 1065	ECM power supply circuit	ECM back-up RAM system does not function properly.	● Harness or connectors [ECM power supply (back-up) circuit is open or shorted.] ● ECM

DTC Confirmation Procedure

BBS0038J

NOTE:
If DTC Confirmation Procedure has been previously conducted, always turn ignition switch OFF and wait at least 10 seconds before conducting the next test.

WITH CONSULT-II

1. Turn ignition switch ON and wait at least 1 second.
2. Select “DATA MONITOR” mode with CONSULT-II.
3. Start engine and let it idle for 1 second.
4. Turn ignition switch OFF, wait at least 10 seconds and then turn ON.
5. Repeat steps 3 and 4 for 4 times.
6. If 1st trip DTC is detected, go to EC-628, "Diagnostic Procedure" .

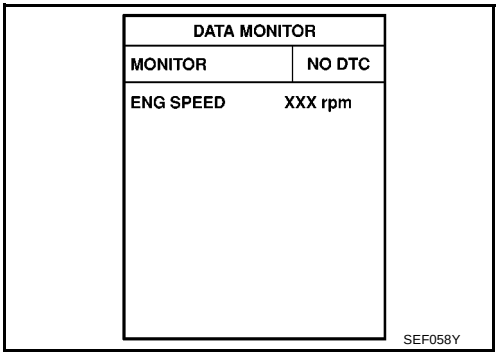

SEF058Y

WITHOUT CONSULT-II

1. Turn ignition switch ON and wait at least 1 second.
2. Start engine and let it idle for 1 second.
3. Turn ignition switch OFF, wait at least 10 seconds and then turn ON.
4. Repeat steps 2 and 3 for 4 times.
5. Turn ignition switch OFF, wait at least 10 seconds and then turn ON.
6. Perform Diagnostic Test Mode II (Self-diagnostic results) with ECM.
7. If 1st trip DTC is detected, go to EC-628, "Diagnostic Procedure" .

Wiring Diagram

BBS0038K

EC-ECM/PW-01

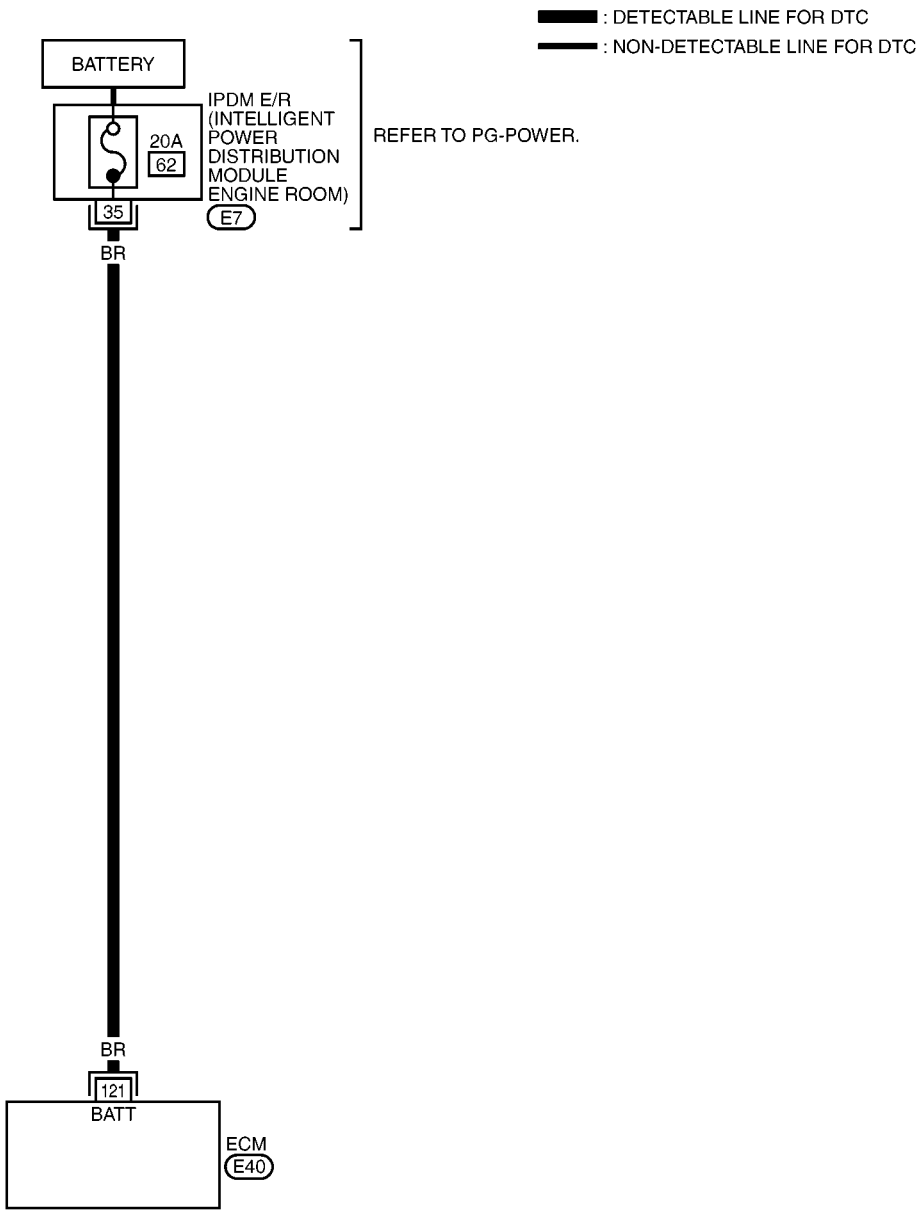

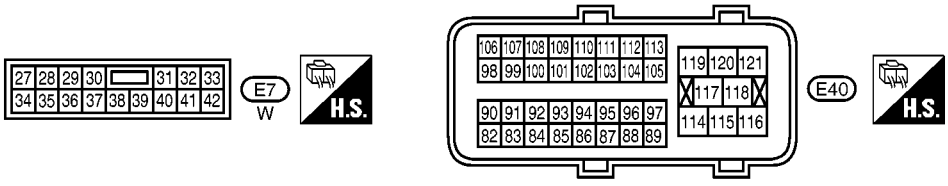

MBWA1518E

Specification data are reference values and are measured between each terminal and ground.

CAUTION:

Do not use ECM ground terminals when measuring input/output voltage. Doing so may result in damage to the ECM's transistor. Use a ground other than ECM terminals, such as the ground.

TERMINAL NO.	WIRE COLOR	ITEM	CONDITION	DATA (DC Voltage)
121	BR	Power supply for ECM (Back-up)	**[Ignition switch: OFF]**	BATTERY VOLTAGE (11 - 14V)

Diagnostic Procedure

BBS0038L

1. CHECK ECM POWER SUPPLY

1. Turn ignition switch OFF.
2. Disconnect ECM harness connector.
3. Check voltage between ECM terminal 121 and ground with CONSULT-II or tester.

Voltage: Battery voltage

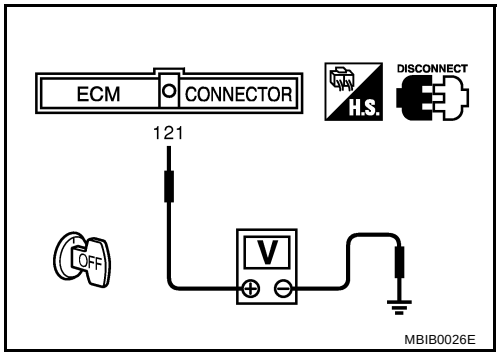

OK or NG

OK >> GO TO 3.
NG >> GO TO 2.

2. DETECT MALFUNCTIONING PART

Check the following.

- 20A fuse
- IPDM E/R harness connector E7
- Harness for open or short between ECM and IPDM E/R

>> Repair or replace harness or connectors.

3. CHECK INTERMITTENT INCIDENT

Refer to EC-542, "TROUBLE DIAGNOSIS FOR INTERMITTENT INCIDENT" .

OK or NG

OK >> GO TO 4.
NG >> Repair or replace harness or connectors.

4. PERFORM DTC CONFIRMATION PROCEDURE

With CONSULT-II

1. Turn ignition switch ON.
2. Select “SELF DIAG RESULTS” mode with CONSULT-II.
3. Touch “ERASE”.
4. **Perform DTC Confirmation Procedure.**
   See EC-626, "DTC Confirmation Procedure" .
5. Is the 1st trip DTC P1065 displayed again?

Without CONSULT-II

1. Turn ignition switch ON.
2. Erase the Diagnostic Test Mode II (Self-diagnostic results) memory. Refer to EC-478, "HOW TO ERASE EMISSION-RELATED DIAGNOSTIC INFORMATION" .
3. **Perform DTC Confirmation Procedure.**
   See EC-626, "DTC Confirmation Procedure" .
4. Is the 1st trip DTC 1065 displayed again?

Yes or No

Yes >> GO TO 5.
No >> **INSPECTION END**

5. REPLACE ECM

1. Replace ECM.
2. Perform initialization of NATS system and registration of all NATS ignition key IDs. Refer to EC-473, "Description" .
3. Perform EC-486, "Accelerator Pedal Released Position Learning" .
4. Perform EC-486, "Throttle Valve Closed Position Learning" .
5. Perform EC-486, "Idle Air Volume Learning" .

>> **INSPECTION END**

DTC P1111 IVT CONTROL SOLENOID VALVE

PFP:23796

Component Description

BBS0038M

Intake valve timing control solenoid valve is activated by ON/OFF pulse duty (ratio) signals from the ECM.
The intake valve timing control solenoid valve changes the oil amount and direction of flow through intake valve timing control unit or stops oil flow.
The longer pulse width advances valve angle.
The shorter pulse width retards valve angle.
When ON and OFF pulse widths become equal, the solenoid valve stops oil pressure flow to fix the intake valve angle at the control position.

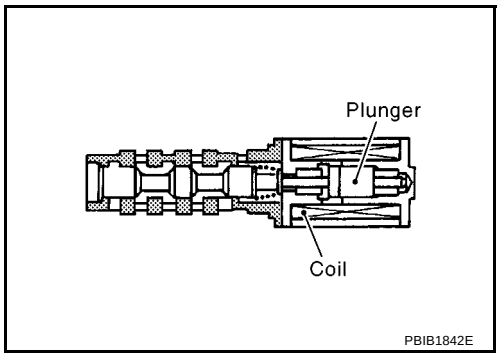

CONSULT-II Reference Value in Data Monitor Mode

BBS0038N

Specification data are reference values.

MONITOR ITEM	CONDITION		SPECIFICATION
INT/V SOL (B1)	● Engine: After warming up ● Shift lever: Neutral ● Air conditioner switch: OFF ● No load	Idle	0% - 2%
		2,000 rpm	Approx. 0% - 50%

On Board Diagnosis Logic

BBS0038O

DTC No.	Trouble diagnosis name	DTC detecting condition	Possible cause
P1111 1111	Intake valve timing control solenoid valve circuit	An improper voltage is sent to the ECM through intake valve timing control solenoid valve.	● Harness or connectors (Intake valve timing control solenoid valve circuit is open or shorted.) ● Intake valve timing control solenoid valve

DTC Confirmation Procedure

BBS0038P

NOTE:
If DTC Confirmation Procedure has been previously conducted, always turn ignition switch OFF and wait at least 10 seconds before conducting the next test.

WITH CONSULT-II

1. Turn ignition switch ON.
2. Select “DATA MONITOR” mode with CONSULT-II.
3. Start engine and let it idle for 5 seconds.
4. If 1st trip DTC is detected, go to EC-633, "Diagnostic Procedure" .

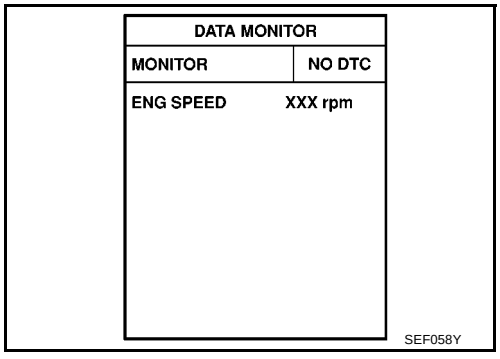

WITHOUT CONSULT-II

1. Start engine and let it idle for 5 seconds.
2. Turn ignition switch OFF and wait at least 10 seconds and then turn ON.
3. Perform Diagnostic Test Mode II (Self-diagnostic results) with ECM.
4. If 1st trip DTC is detected, go to EC-633, "Diagnostic Procedure" .

Wiring Diagram

BBS0038Q

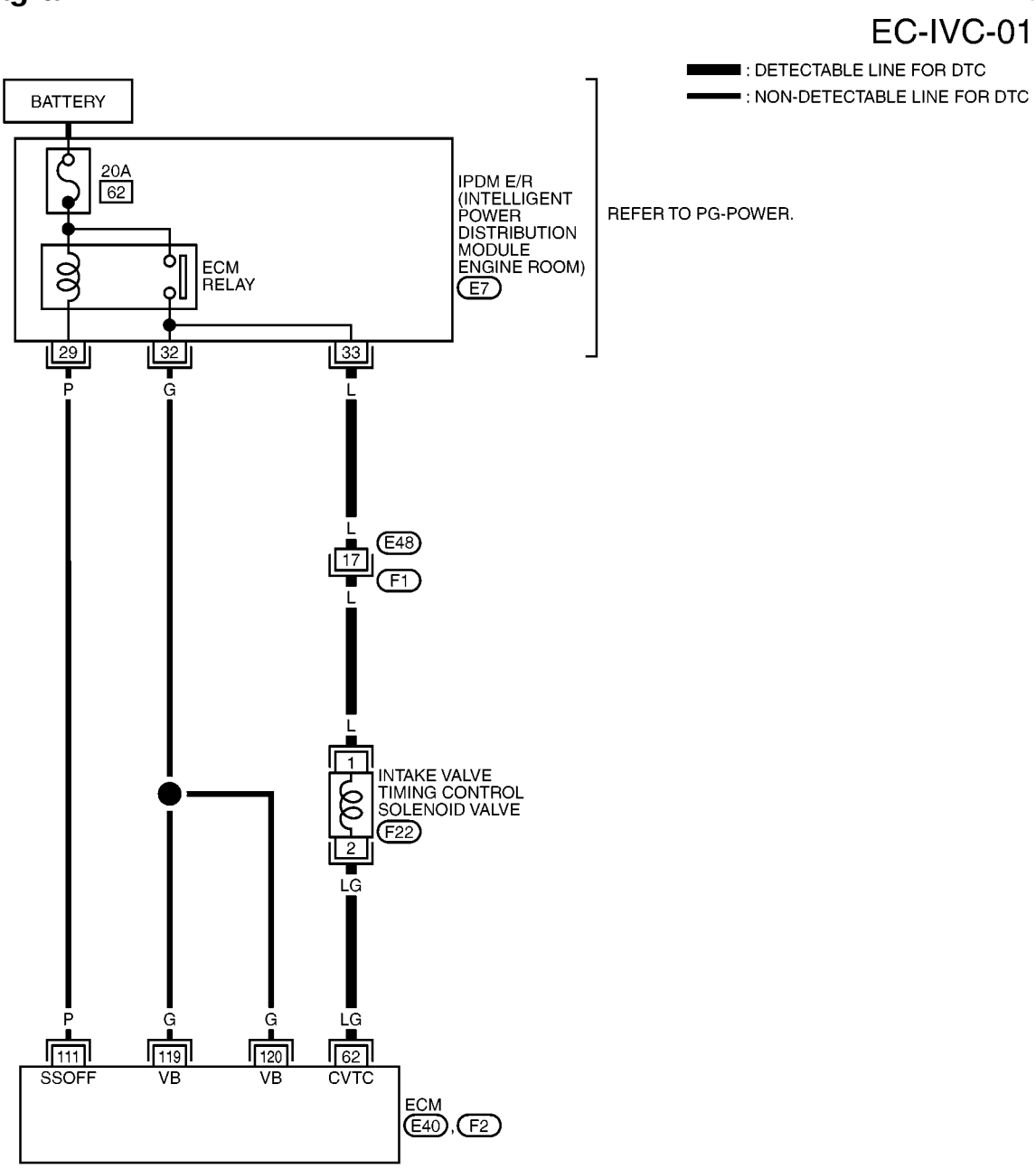

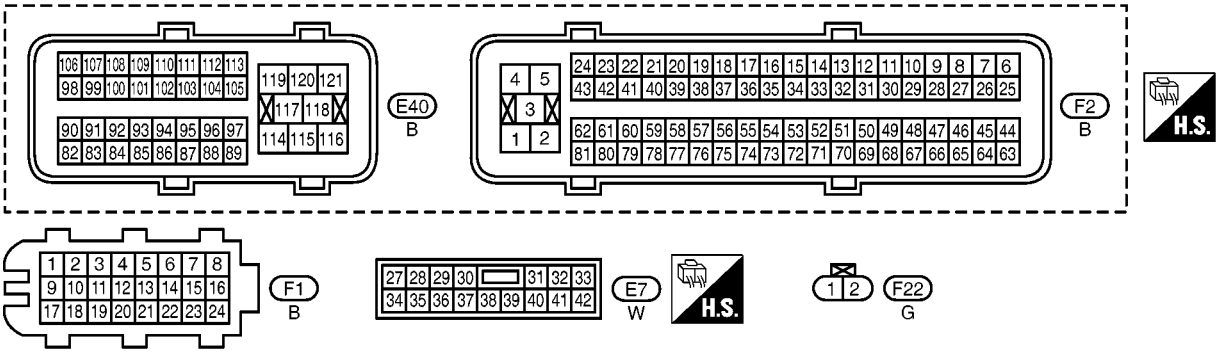

MBWA1519E

Specification data are reference values and are measured between each terminal and ground.

CAUTION:

Do not use ECM ground terminals when measuring input/output voltage. Doing so may result in damage to the ECM's transistor. Use a ground other than ECM terminals, such as the ground.

TERMINAL NO.	WIRE COLOR	ITEM	CONDITION	DATA (DC Voltage)
62	LG	Intake valve timing control solenoid valve	**[Engine is running]** ● **Warm-up condition** ● Idle speed	BATTERY VOLTAGE (11 - 14V)
			[Engine is running] ● **Warm-up condition** ● Engine speed: 2,000 rpm	Approximately 4V - BATTERY VOLTAGE (11 - 14V)★ 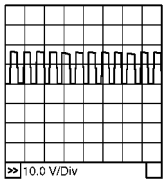 PBIB1790E
111	P	ECM relay (Self shut-off)	**[Engine is running]** **[Ignition switch: OFF]** ● For a few seconds after turning ignition switch OFF	0 - 1.0V
			[Ignition switch: OFF] ● More than a few seconds passed after turning ignition switch OFF	BATTERY VOLTAGE (11 - 14V)
119 120	G G	Power supply for ECM	**[Ignition switch: ON]**	BATTERY VOLTAGE (11 - 14V)

★: Average voltage for pulse signal (Actual pulse signal can be confirmed by oscilloscope.)

Diagnostic Procedure

BBS0038R

1. CHECK INTAKE VALVE TIMING CONTROL SOLENOID VALVE POWER SUPPLY CIRCUIT

1. Turn ignition switch OFF.
2. Disconnect intake valve timing control solenoid valve harness connector.
3. Turn ignition switch ON.

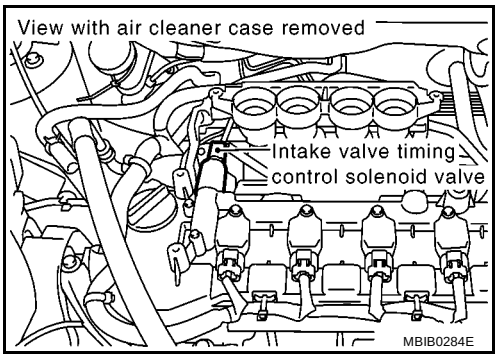

4. Check voltage between intake valve timing control solenoid valve terminal 1 and ground with CONSULT-II or tester.

Voltage: Battery voltage

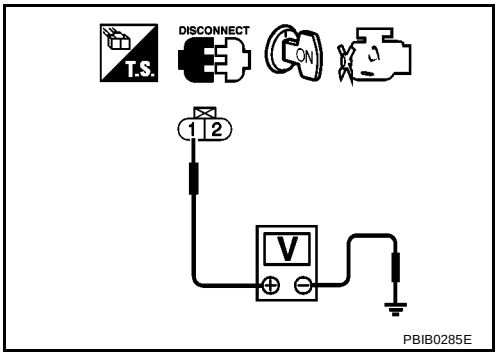

OK or NG

OK >> GO TO 3.
NG >> GO TO 2.

2. DETECT MALFUNCTION PART

Check the following.

- Harness connectors E48, F1
- Harness for open or short between intake valve timing control solenoid valve and IPDM E/R

>> Repair or replace harness or connectors.

3. CHECK INTAKE VALVE TIMING CONTROL SOLENOID VALVE OUTPUT SIGNAL CIRCUIT FOR OPEN AND SHORT

1. Turn ignition switch OFF.
2. Disconnect ECM harness connector.
3. Check harness continuity between ECM terminal 62 and intake valve timing control solenoid valve terminal 2. Refer to Wiring Diagram.

Continuity should exist.

4. Also check harness for short to ground and short to power.

OK or NG

OK >> GO TO 4.
NG >> Repair open circuit or short to ground or short to power in harness or connectors.

4. CHECK INTAKE VALVE TIMING CONTROL SOLENOID VALVE

Refer to EC-634, "Component Inspection" .

OK or NG

OK >> GO TO 5.
NG >> Replace intake valve timing control solenoid valve.

5. CHECK INTERMITTENT INCIDENT

Refer to EC-542, "TROUBLE DIAGNOSIS FOR INTERMITTENT INCIDENT" .

>> **INSPECTION END**

Component Inspection

BBS0038S

INTAKE VALVE TIMING CONTROL SOLENOID VALVE

1. Disconnect intake valve timing control solenoid valve harness connector.
2. Check resistance between intake valve timing control solenoid valve as follows.

Terminal	Resistance
1 and 2	6.7 - 7.7Ω at 20°C (68°F)
1 or 2 and ground	∞Ω (Continuity should not exist.)

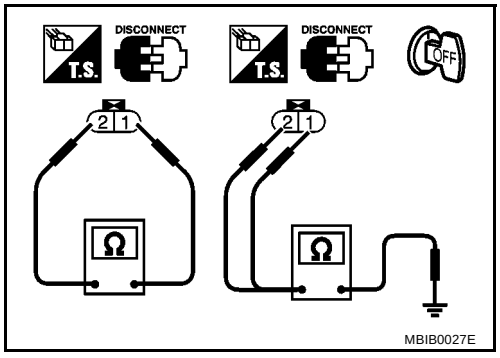

If NG, replace intake valve timing control solenoid valve.
If OK, go to next step.

3. Remove intake valve timing control solenoid valve.
4. Provide 12V DC between intake valve timing control solenoid valve terminals and then interrupt it. Make sure that the plunger moves as shown in the figure.

CAUTION:
Do not apply 12V DC continuously for 5 seconds or more. Doing so may result in damage to the coil in intake valve timing control solenoid valve.
If NG, replace intake valve timing control solenoid valve.

NOTE:
Always replace O-ring when intake valve timing control solenoid valve is removed.

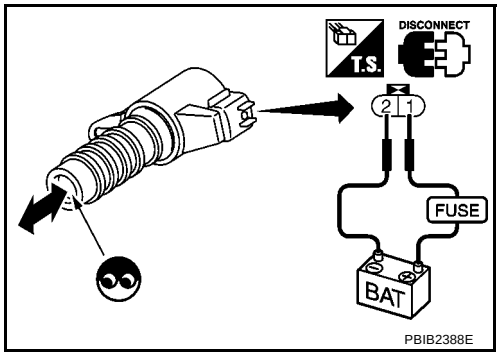

Removal and Installation

BBS0038T

INTAKE VALVE TIMING CONTROL SOLENOID VALVE

Refer to EM-35, "ROCKER COVER" .

DTC P1121 ELECTRIC THROTTLE CONTROL ACTUATOR

PFP:16119

Component Description

BBS0038U

Electric throttle control actuator consists of throttle control motor, throttle position sensor, etc.
The throttle control motor is operated by the ECM and it opens and closes the throttle valve.
The throttle position sensor detects the throttle valve position, and the opening and closing speed of the throttle valve and feeds the voltage signals to the ECM. The ECM judges the current opening angle of the throttle valve from these signals and the ECM controls the throttle control motor to make the throttle valve opening angle properly in response to driving condition.

On Board Diagnosis Logic

BBS0038V

This self-diagnosis has the one trip detection logic.

DTC No.	Trouble diagnosis name	DTC detecting condition		Possible cause
P1121 1121	Electric throttle control actuator	A)	Electric throttle control actuator does not function properly due to the return spring malfunction.	● Electric throttle control actuator
		B)	Throttle valve opening angle in fail-safe mode is not in specified range.	
		C)	ECM detect the throttle valve is stuck open.	

FAIL-SAFE MODE

When the malfunction is detected, the ECM enters fail-safe mode and the MI lights up.

Detected items	Engine operating condition in fail-safe mode
Malfunction A	The ECM controls the electric throttle actuator by regulating the throttle opening around the idle position. The engine speed will not rise more than 2,000 rpm.
Malfunction B	ECM controls the electric throttle control actuator by regulating the throttle opening to 20 degrees or less.
Malfunction C	While the vehicle is driving, it slows down gradually by fuel cut. After the vehicle stops, the engine stalls. The engine can restart in Neutral position, and engine speed will not exceed 1,000 rpm or more.

DTC Confirmation Procedure

BBS0038W

NOTE:

- **Perform PROCEDURE FOR MALFUNCTION A AND B first. If the DTC cannot be confirmed, perform PROCEDURE FOR MALFUNCTION C.**
- If DTC Confirmation Procedure has been previously conducted, always turn ignition switch OFF and wait at least 10 seconds before conducting the next test.

PROCEDURE FOR MALFUNCTION A AND B

With CONSULT-II

1. Turn ignition witch ON and wait at least 1 second.
2. Select “DATA MONITOR” mode with CONSULT-II.
3. Set shift lever to 1st position and wait at least 2 seconds.
4. Set shift lever to Neutral position.
5. Turn ignition switch OFF and wait at least 10 seconds.
6. Turn ignition witch ON and wait at least 1 second.
7. Set shift lever to 1st position and wait at least 2 seconds.
8. Set shift lever to Neutral position.
9. Turn ignition switch OFF, wait at least 10 seconds, and then turn ON.
10. If DTC is detected, go to EC-636, "Diagnostic Procedure" .

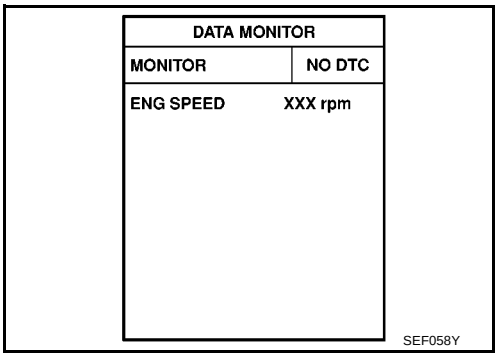

Without CONSULT-II

1. Turn ignition switch ON and wait at least 1 second.
2. Set shift lever to 1st position and wait at least 2 seconds.
3. Set shift lever to Neutral position.

4. Turn ignition switch OFF and wait at least 10 seconds.
5. Turn ignition witch ON and wait at least 1 second.
6. Set shift lever to 1st position and wait at least 2 seconds.
7. Set shift lever to Neutral position.
8. Turn ignition switch OFF, wait at least 10 seconds and then turn ON.
9. Perform Diagnostic Test Mode II (Self-diagnostic results) with ECM.
10. If DTC is detected, go to EC-636, "Diagnostic Procedure" .

PROCEDURE FOR MALFUNCTION C

With CONSULT-II

1. Turn ignition switch ON and wait at least 1 second.
2. Select “DATA MONITOR” mode with CONSULT-II.
3. Set shift lever to 1st position and wait at least 2 seconds.
4. Set shift lever to Neutral position.
5. Start engine and let it idle for 3 seconds.
6. If DTC is detected, go to EC-636, "Diagnostic Procedure" .

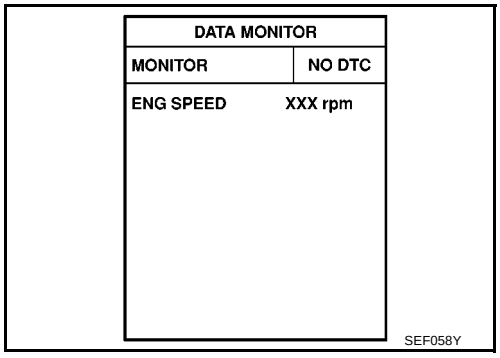

Without CONSULT-II

1. Turn ignition switch ON and wait at least 1 second.
2. Set shift lever to 1st position and wait at least 2 seconds.
3. Set shift lever to Neutral position.
4. Start engine and let it idle for the 3 seconds.
5. Turn ignition switch OFF, wait at least 10 seconds and then turn ON.
6. Perform Diagnostic Test Mode II (Self-diagnostic results) with ECM.
7. If DTC is detected, go to EC-636, "Diagnostic Procedure" .

Diagnostic Procedure

BBS0038X

1. CHECK ELECTRIC THROTTLE CONTROL ACTUATOR VISUALLY

1. Remove the intake air duct.
2. Check if a foreign matter is caught between the throttle valve and the housing.

OK or NG

OK >> GO TO 2.
NG >> Remove the foreign matter and clean the electric throttle control actuator inside.

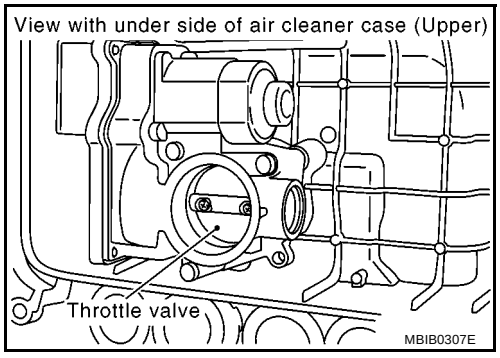

2. REPLACE ELECTRIC THROTTLE CONTROL ACTUATOR

1. Replace the electric throttle control actuator.
2. Perform EC-486, "Throttle Valve Closed Position Learning" .
3. Perform EC-486, "Idle Air Volume Learning" .

>> **INSPECTION END**

DTC P1122 ELECTRIC THROTTLE CONTROL FUNCTION

PFP:16119

Description

BBS0038Y

NOTE:
If DTC P1122 is displayed with DTC P1121 or P1126, first perform the trouble diagnosis for DTC P1121 or P1126. Refer to EC-635 or EC-643 .
Electric throttle control actuator consists of throttle control motor, throttle position sensor, etc.
The throttle control motor is operated by the ECM and it opens and closes the throttle valve.
The current opening angle of the throttle valve is detected by the throttle position sensor and it provides feedback to the ECM to control the throttle control motor to make the throttle valve opening angle properly in response to driving condition.

On Board Diagnosis Logic

BBS0038Z

This self-diagnosis has the one trip detection logic.

DTC No.	Trouble diagnosis name	DTC detecting condition	Possible cause
P1122 1122	Electric throttle control performance	Electric throttle control function does not operate properly.	● Harness or connectors (Throttle control motor circuit is open or shorted.) ● Electric throttle control actuator

FAIL-SAFE MODE

When the malfunction is detected, the ECM enters fail-safe mode and the MI lights up.

Engine operating condition in fail-safe mode
ECM stops the electric throttle control actuator control, throttle valve is maintained at a fixed opening (approx. 5 degrees) by the return spring.

DTC Confirmation Procedure

BBS00390

NOTE:
If DTC Confirmation Procedure has been previously conducted, always turn ignition switch OFF and wait at least 10 seconds before conducting the next test.
TESTING CONDITION:
Before performing the following procedure, confirm that battery voltage is more than 11V when engine is running.

WITH CONSULT-II

1. Turn ignition switch ON and wait at least 2 seconds.
2. Select “DATA MONITOR” mode with CONSULT-II.
3. Start engine and let it idle for 5 seconds.
4. If DTC is detected, go to EC-639, "Diagnostic Procedure" .

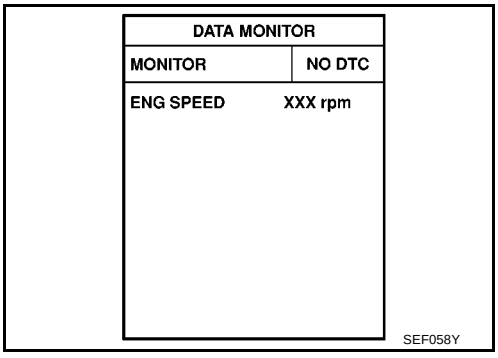

WITHOUT CONSULT-II

1. Turn ignition switch ON and wait at least 2 seconds.
2. Start engine and let it idle for 5 seconds.
3. Turn ignition switch OFF, wait at least 10 seconds and then turn ON.
4. Perform Diagnostic Test Mode II (Self-diagnostic results) with ECM.
5. If DTC is detected, go to EC-639, "Diagnostic Procedure" .

Wiring Diagram

BBS00391

EC-ETC1-01

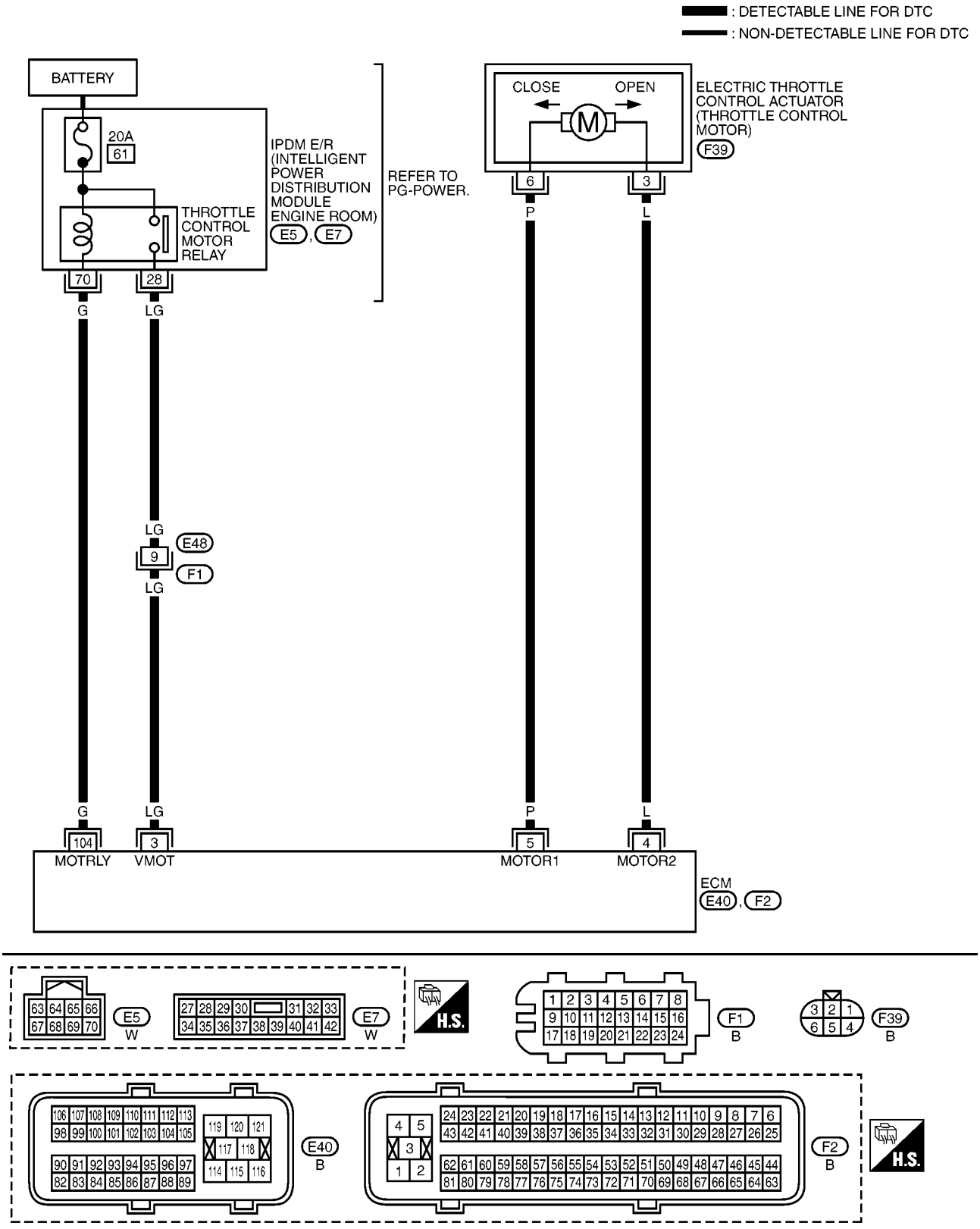

MBWA1520E

Specification data are reference values and are measured between each terminal and ground.
Pulse signal is measured by CONSULT-II.

CAUTION:
Do not use ECM ground terminals when measuring input/output voltage. Doing so may result in damage to the ECM's transistor. Use a ground other than ECM terminals, such as the ground.

TERMINAL NO.	WIRE COLOR	ITEM	CONDITION	DATA (DC Voltage)
3	LG	Throttle control motor relay power supply	**[Ignition switch: ON]**	BATTERY VOLTAGE (11 - 14V)
4	L	Throttle control motor (Close)	**[Ignition switch: ON]** ● **Engine stopped** ● Shift lever position: 1st ● Accelerator pedal: Fully released	0 - 14V★ 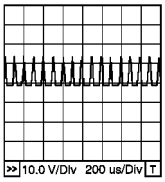 PBIB0534E
5	P	Throttle control motor (Open)	**[Ignition switch: ON]** ● **Engine stopped** ● Shift lever position: 1st ● Accelerator pedal: Fully depressed	0 - 14V★ 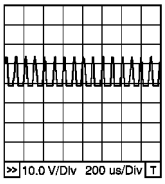 PBIB0533E
104	G	Throttle control motor relay	**[Ignition switch: OFF]**	BATTERY VOLTAGE (11 - 14V)
			[Ignition switch: ON]	0 - 1.0V

★: Average voltage for pulse signal (Actual pulse signal can be confirmed by oscilloscope.)

Diagnostic Procedure

BBS00392

1. CHECK GROUND CONNECTIONS

1. Turn ignition switch OFF.
2. Loosen and retighten ground screws on the body.
   Refer to EC-548, "Ground Inspection" .

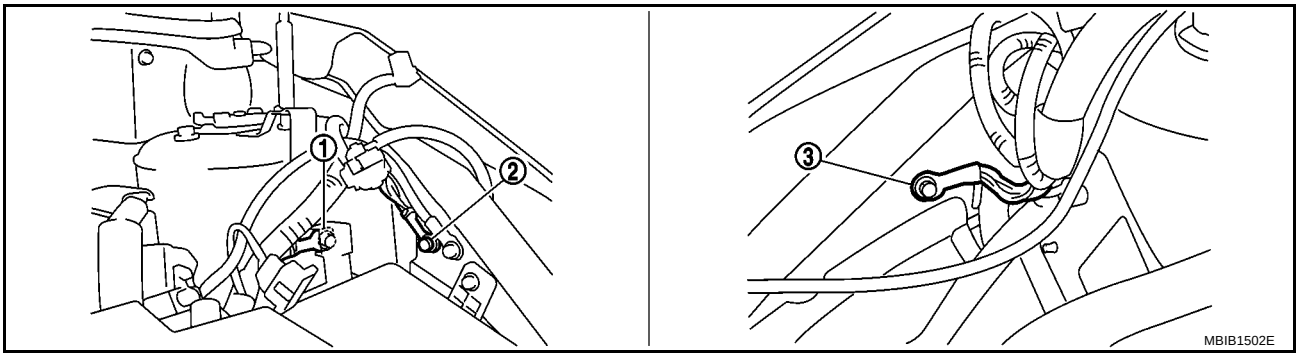

1. Body ground E44
2. Body ground E45
3. Body ground E28

OK or NG

OK >> GO TO 2.
NG >> Repair or replace ground connections.

2. CHECK THROTTLE CONTROL MOTOR RELAY SIGNAL CIRCUIT-I

Check voltage between ECM terminal 3 and ground under the following conditions with CONSULT-II or tester.

Ignition switch	Voltage
OFF	Approximately 0V
ON	Battery voltage (11 - 14V)

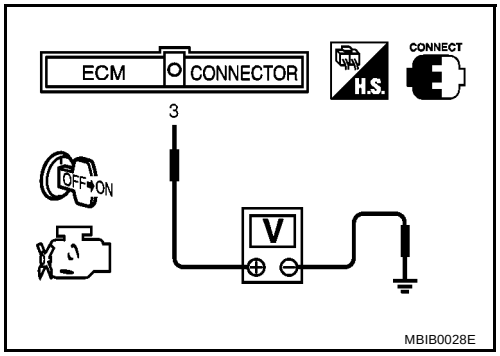

OK or NG

OK >> GO TO 9.
NG >> GO TO 3.

3. CHECK THROTTLE CONTROL MOTOR RELAY POWER SUPPLY CIRCUIT-I

1. Turn ignition switch OFF.
2. Check voltage between ECM terminal 104 and ground with CONSULT-II or tester.

Voltage: Battery voltage

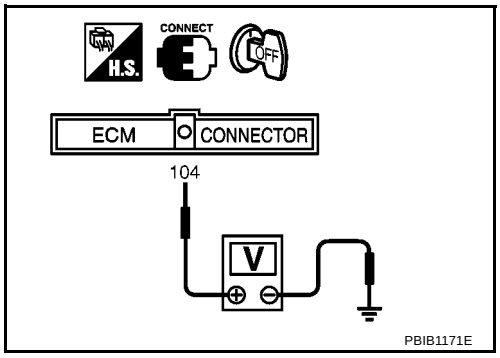

OK or NG

OK >> GO TO 6.
NG >> GO TO 4.

4. CHECK THROTTLE CONTROL MOTOR RELAY POWER SUPPLY CIRCUIT-II

1. Disconnect ECM harness connector.
2. Disconnect IPDM E/R harness connector E5.
3. Check continuity between ECM terminal 104 and IPDM E/R terminal 70.
   Refer to Wiring Diagram.

Continuity should exist.

4. Also check harness for short to ground and short to power.

OK or NG

OK >> GO TO 5.
NG >> Repair open circuit or short to ground or short to power in harness or connectors.

5. CHECK FUSE

1. Disconnect 20A fuse.
2. Check 20A fuse for blown.

OK or NG

OK >> GO TO 8.
NG >> Replace 20A fuse.

6. CHECK THROTTLE CONTROL MOTOR RELAY INPUT SIGNAL CIRCUIT-II

1. Disconnect ECM harness connector.
2. Disconnect IPDM E/R harness connector E7.
3. Check harness continuity between ECM terminal 3 and IPDM E/R terminal 28.
   Refer to Wiring Diagram.

   Continuity should exist.

4. Also check harness for short to ground and short to power.

OK or NG

OK >> GO TO 8.
NG >> GO TO 7.

7. DETECT MALFUNCTIONING PART

Check the following.

- Harness connectors E48, F1
- Harness for open or short between ECM and IPDM E/R

>> Repair open circuit or short to ground or short to power in harness or connectors.

8. CHECK INTERMITTENT INCIDENT

Refer to EC-542, "TROUBLE DIAGNOSIS FOR INTERMITTENT INCIDENT" .

OK or NG

OK >> Replace IPDM E/R. Refer to PG-18, "IPDM E/R (INTELLIGENT POWER DISTRIBUTION MODULE ENGINE ROOM)" .
NG >> Repair or replace harness or connectors.

9. CHECK THROTTLE CONTROL MOTOR OUTPUT SIGNAL CIRCUIT FOR OPEN OR SHORT

1. Turn ignition switch OFF.
2. Disconnect electric throttle control actuator harness connector.
3. Disconnect ECM harness connector.
4. Check harness continuity between the following terminals.
   Refer to Wiring Diagram.

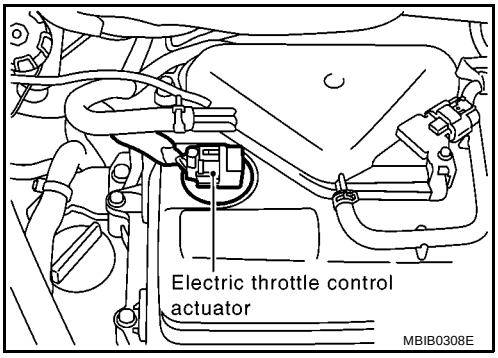

Electric throttle control actuator terminal	ECM terminal	Continuity
3	5	Should not exist
	4	Should exist
6	5	Should exist
	4	Should not exist

5. Also check harness for short to ground and short to power.

OK or NG

OK >> GO TO 10.
NG >> Repair or replace.

10. CHECK ELECTRIC THROTTLE CONTROL ACTUATOR VISUALLY

1. Remove the intake air duct.
2. Check if foreign matter is caught between the throttle valve and the housing.

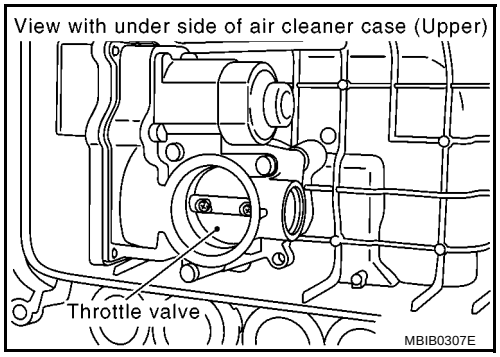

OK or NG

OK >> GO TO 11.
NG >> Remove the foreign matter and clean the electric throttle control actuator inside.

11. CHECK THROTTLE CONTROL MOTOR

Refer to EC-642, "Component Inspection" .

OK or NG

OK >> GO TO 12.
NG >> GO TO 13.

12. CHECK INTERMITTENT INCIDENT

Refer to EC-542, "TROUBLE DIAGNOSIS FOR INTERMITTENT INCIDENT" .

OK or NG

OK >> GO TO 13.
NG >> Repair or replace harness or connectors.

13. REPLACE ELECTRIC THROTTLE CONTROL ACTUATOR

1. Replace the electric throttle control actuator.
2. Perform EC-486, "Throttle Valve Closed Position Learning" .
3. Perform EC-486, "Idle Air Volume Learning" .

>> **INSPECTION END**

Component Inspection

BBS00393

THROTTLE CONTROL MOTOR

1. Disconnect electric throttle control actuator harness connector.
2. Check resistance between terminals 3 and 6.

Resistance: Approximately 1 - 15 Ω [at 25 °C (77°F)]

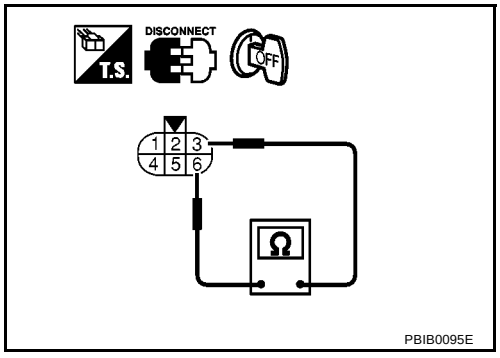

3. If NG, replace electric throttle control actuator and go to next step.
4. Perform EC-486, "Throttle Valve Closed Position Learning" .
5. Perform EC-486, "Idle Air Volume Learning" .

Removal and Installation

BBS00394

ELECTRIC THROTTLE CONTROL ACTUATOR

Refer to EM-18, "AIR CLEANER AND AIR DUCT" .

DTC P1124, P1126 THROTTLE CONTROL MOTOR RELAY

PFP:16119

Component Description

BBS00395

Power supply for the throttle control motor is provided to the ECM via throttle control motor relay. The throttle control motor relay is ON/OFF controlled by the ECM. When the ignition switch is turned ON, the ECM sends an ON signal to throttle control motor relay and battery voltage is provided to the ECM. When the ignition switch is turned OFF, the ECM sends an OFF signal to throttle control motor relay and battery voltage is not provided to the ECM.

CONSULT-II Reference Value in Data Monitor Mode

BBS00396

Specification data are reference values.

MONITOR ITEM	CONDITION	SPECIFICATION
THRTL RELAY	● Ignition switch: ON	ON

On Board Diagnosis Logic

BBS00397

These self-diagnoses have the one trip detection logic.

DTC No.	Trouble diagnosis name	DTC detecting condition	Possible cause
P1124 1124	Throttle control motor relay circuit short	ECM detects the throttle control motor relay is stuck ON.	● Harness or connectors (Throttle control motor relay circuit is shorted.) ● Throttle control motor relay
P1126 1126	Throttle control motor relay circuit open	ECM detects a voltage of power source for throttle control motor is excessively low.	● Harness or connectors (Throttle control motor relay circuit is open.) ● Throttle control motor relay

FAIL-SAFE MODE

When the malfunction is detected, the ECM enters fail-safe mode and the MI lights up.

Engine operating condition in fail-safe mode
ECM stops the electric throttle control actuator control, throttle valve is maintained at a fixed opening (approx. 5 degrees) by the return spring.

DTC Confirmation Procedure

BBS00398

NOTE:
If DTC Confirmation Procedure has been previously conducted, always turn ignition switch OFF and wait at least 10 seconds before conducting the next test.

PROCEDURE FOR DTC P1124

TESTING CONDITION:
Before performing the following procedure, confirm that battery voltage is more than 8V.

With CONSULT-II

1. Turn ignition switch ON and wait at least 1 second.
2. Select “DATA MONITOR” mode with CONSULT-II.
3. If DTC is detected, go to EC-646, "Diagnostic Procedure" .

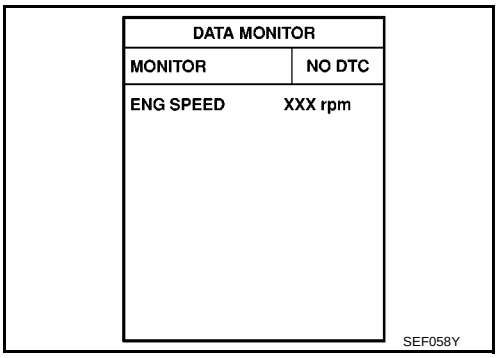

Without CONSULT-II

1. Turn ignition switch ON and wait at least 1 second.
2. Turn ignition switch OFF, wait at least 10 seconds and then turn ON.
3. If DTC is detected, go to EC-646, "Diagnostic Procedure" .

PROCEDURE FOR DTC P1126

With CONSULT-II

1. Turn ignition switch ON and wait at least 2 seconds.
2. Select “DATA MONITOR” mode with CONSULT-II.
3. Start engine and let it idle for 5 seconds.
4. If DTC is detected, go to EC-646, "Diagnostic Procedure" .

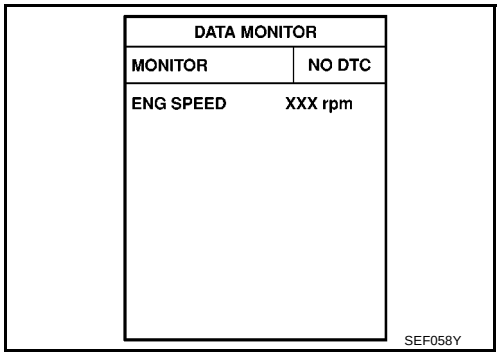

Without CONSULT-II

1. Turn ignition switch ON and wait at least 2 second.
2. Start engine and let it idle for 5 seconds.
3. Turn ignition switch OFF, wait at least 10 seconds and then turn ON.
4. Perform Diagnostic Test Mode II (Self-diagnostic results) with ECM.
5. If DTC is detected, go to EC-646, "Diagnostic Procedure" .

Wiring Diagram

BBS00399

EC-ETC2-01

: DETECTABLE LINE FOR DTC
: NON-DETECTABLE LINE FOR DTC

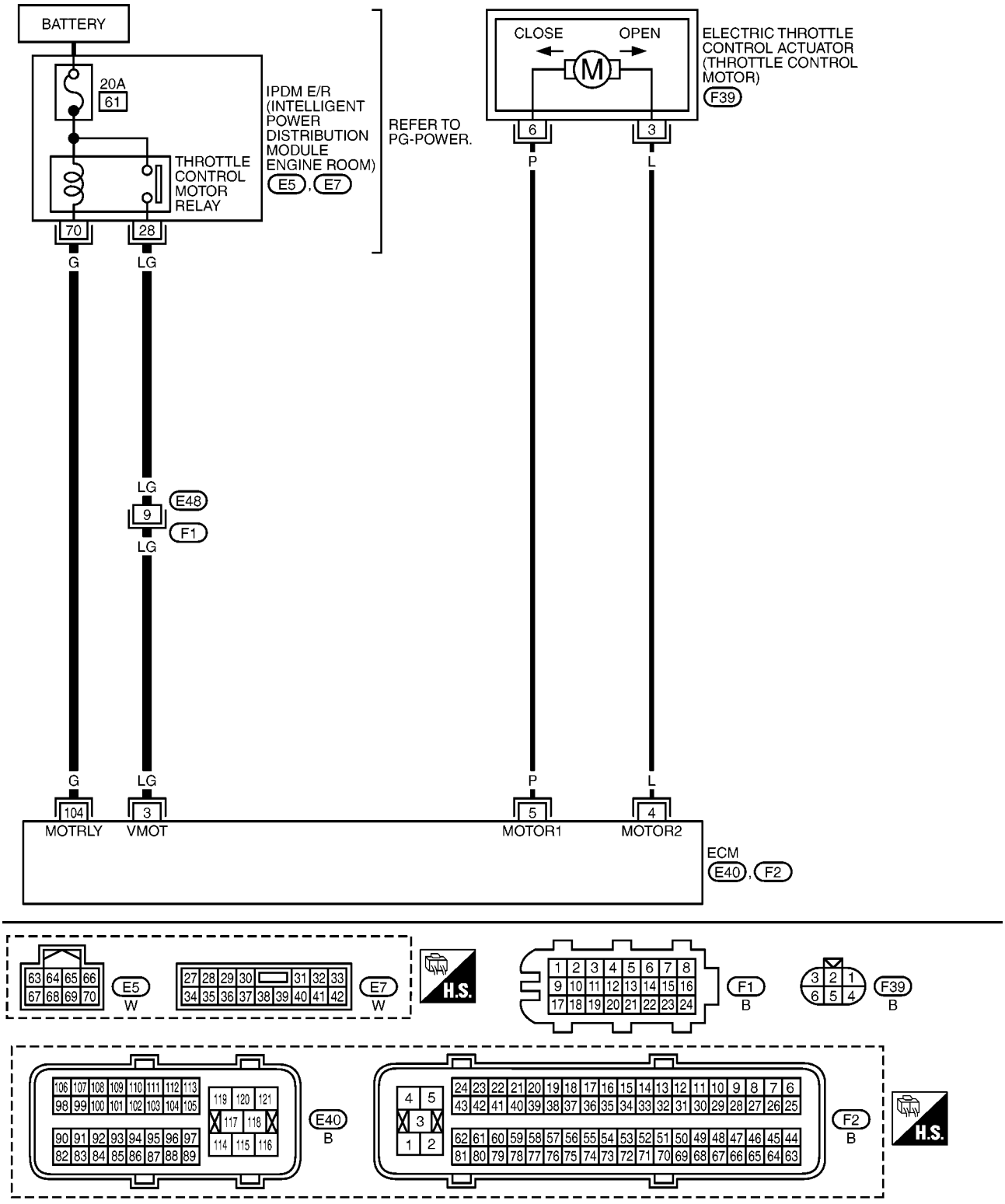

MBWA1521E

Specification data are reference values and are measured between each terminal and ground.
Pulse signal is measured by CONSULT-II.

CAUTION:

Do not use ECM ground terminals when measuring input/output voltage. Doing so may result in damage to the ECM's transistor. Use a ground other than ECM terminals, such as the ground.

TERMINAL NO.	WIRE COLOR	ITEM	CONDITION	DATA (DC Voltage)
3	LG	Throttle control motor relay power supply	**[Ignition switch: ON]**	BATTERY VOLTAGE (11 - 14V)
4	L	Throttle control motor (Close)	**[Ignition switch: ON]** ● **Engine stopped** ● Shift lever position: 1st ● Accelerator pedal: Fully released	0 - 14V★ 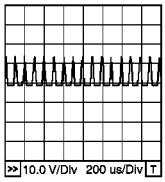 PBIB0534E
5	P	Throttle control motor (Open)	**[Ignition switch: ON]** ● **Engine stopped** ● Shift lever position: 1st ● Accelerator pedal: Fully depressed	0 - 14V★ 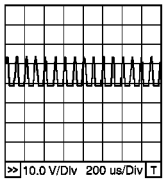 PBIB0533E
104	G	Throttle control motor relay	**[Ignition switch: OFF]**	BATTERY VOLTAGE (11 - 14V)
			[Ignition switch: ON]	0 - 1.0V

★: Average voltage for pulse signal (Actual pulse signal can be confirmed by oscilloscope.)

Diagnostic Procedure

BBS0039A

1. CHECK THROTTLE CONTROL MOTOR RELAY POWER SUPPLY CIRCUIT-I

1. Turn ignition switch OFF.
2. Check voltage between ECM terminal 104 and ground with CONSULT-II or tester.

Voltage: Battery voltage.

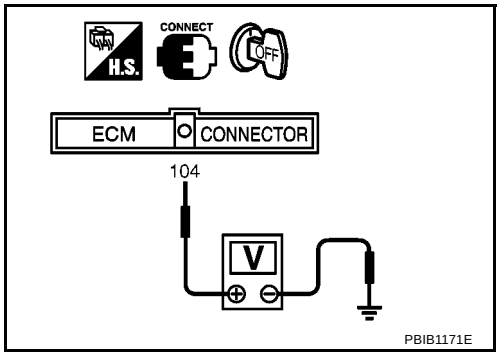

OK or NG

OK >> GO TO 4.
NG >> GO TO 2.

2. CHECK THROTTLE CONTROL MOTOR RELAY POWER SUPPLY CIRCUIT-II

1. Disconnect ECM harness connector.
2. Disconnect IPDM E/R harness connector E5.
3. Check continuity between ECM terminal 104 and IPDM E/R terminal 70.

Continuity should exist.

4. Also check harness for short to ground and short to power.

OK or NG

OK >> GO TO 3.
NG >> Repair open circuit or short to ground or short to power in harness or connectors.

3. CHECK FUSE

1. Disconnect 20A fuse.
2. Check 20A fuse for blown.

OK or NG

OK >> GO TO 7.
NG >> Replace 20A fuse.

4. CHECK THROTTLE CONTROL MOTOR RELAY INPUT SIGNAL CIRCUIT-I

1. Reconnect all disconnected connectors.
2. Check voltage between ECM terminal 3 and ground under the following conditions with CONSULT-II or tester.

Ignition switch	Voltage
OFF	Approximately 0V
ON	Battery voltage (11 - 14V)

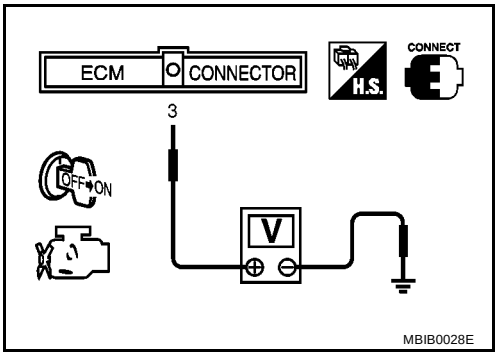

OK or NG

OK >> GO TO 7.
NG >> GO TO 5.

5. CHECK THROTTLE CONTROL MOTOR RELAY INPUT SIGNAL CIRCUIT-II

1. Turn ignition switch OFF.
2. Disconnect ECM harness connector.
3. Disconnect IPDM E/R harness connector E7.
4. Check continuity between ECM terminal 3 and IPDM E/R terminal 28.
   Refer to Wiring Diagram.

Continuity should exist.

5. Also check harness for short to ground and short to power.

OK or NG

OK >> GO TO 7.
NG >> GO TO 6.

6. DETECT MALFUNCTIONING PART

Check the following.

- Harness connectors E48, F1
- Harness for open or short between ECM and IPDM E/R

>> Repair open circuit or short to ground or short to power in harness or connectors.

7. CHECK INTERMITTENT INCIDENT

Refer to EC-542, "TROUBLE DIAGNOSIS FOR INTERMITTENT INCIDENT" .

OK or NG

OK >> Replace IPDM E/R. Refer to PG-18, "IPDM E/R (INTELLIGENT POWER DISTRIBUTION MODULE ENGINE ROOM)" .

NG >> Repair or replace harness or connectors.

DTC P1128 THROTTLE CONTROL MOTOR

PFP:16119

Component Description

BBS0039B

The throttle control motor is operated by the ECM and it opens and closes the throttle valve.
The current opening angle of the throttle valve is detected by the throttle position sensor and it provides feedback to the ECM to control the throttle control motor to make the throttle valve opening angle properly in response to driving condition.

On Board Diagnosis Logic

BBS0039C

This self-diagnosis has the one trip detection logic.

DTC No.	Trouble diagnosis name	DTC detecting condition	Possible cause
P1128 1128	Throttle control motor circuit short	ECM detects short in both circuits between ECM and throttle control motor.	● Harness or connectors (Throttle control motor circuit is shorted.) ● Electric throttle control actuator (Throttle control motor)

FAIL-SAFE MODE

When the malfunction is detected, the ECM enters fail-safe mode and the MI lights up.

Engine operating condition in fail-safe mode
ECM stops the electric throttle control actuator control, throttle valve is maintained at a fixed opening (approx. 5 degrees) by the return spring.

DTC Confirmation Procedure

BBS0039D

NOTE:
If DTC Confirmation Procedure has been previously conducted, always turn ignition switch OFF and wait at least 10 seconds before conducting the next test.

WITH CONSULT-II

1. Turn ignition switch ON and wait at least 2 seconds.
2. Select “DATA MONITOR” mode with CONSULT-II.
3. Start engine and let it idle for 5 seconds.
4. If DTC is detected, go to EC-651, "Diagnostic Procedure" .

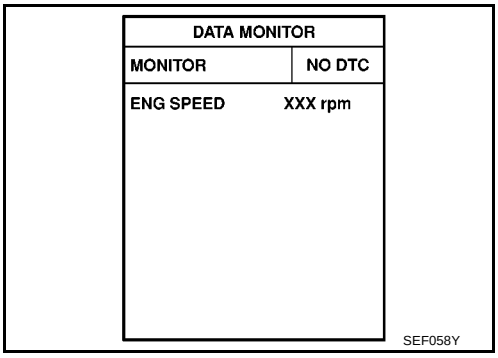

WITHOUT CONSULT-II

1. Turn ignition switch ON and wait at least 2 second.
2. Start engine and let it idle for 5 seconds.
3. Turn ignition switch OFF, wait at least 10 seconds and then turn ON.
4. Perform Diagnostic Test Mode II (Self-diagnostic results) with ECM.
5. If DTC is detected, go to EC-651, "Diagnostic Procedure" .

Wiring Diagram

BBS0039E

EC-ETC3-01

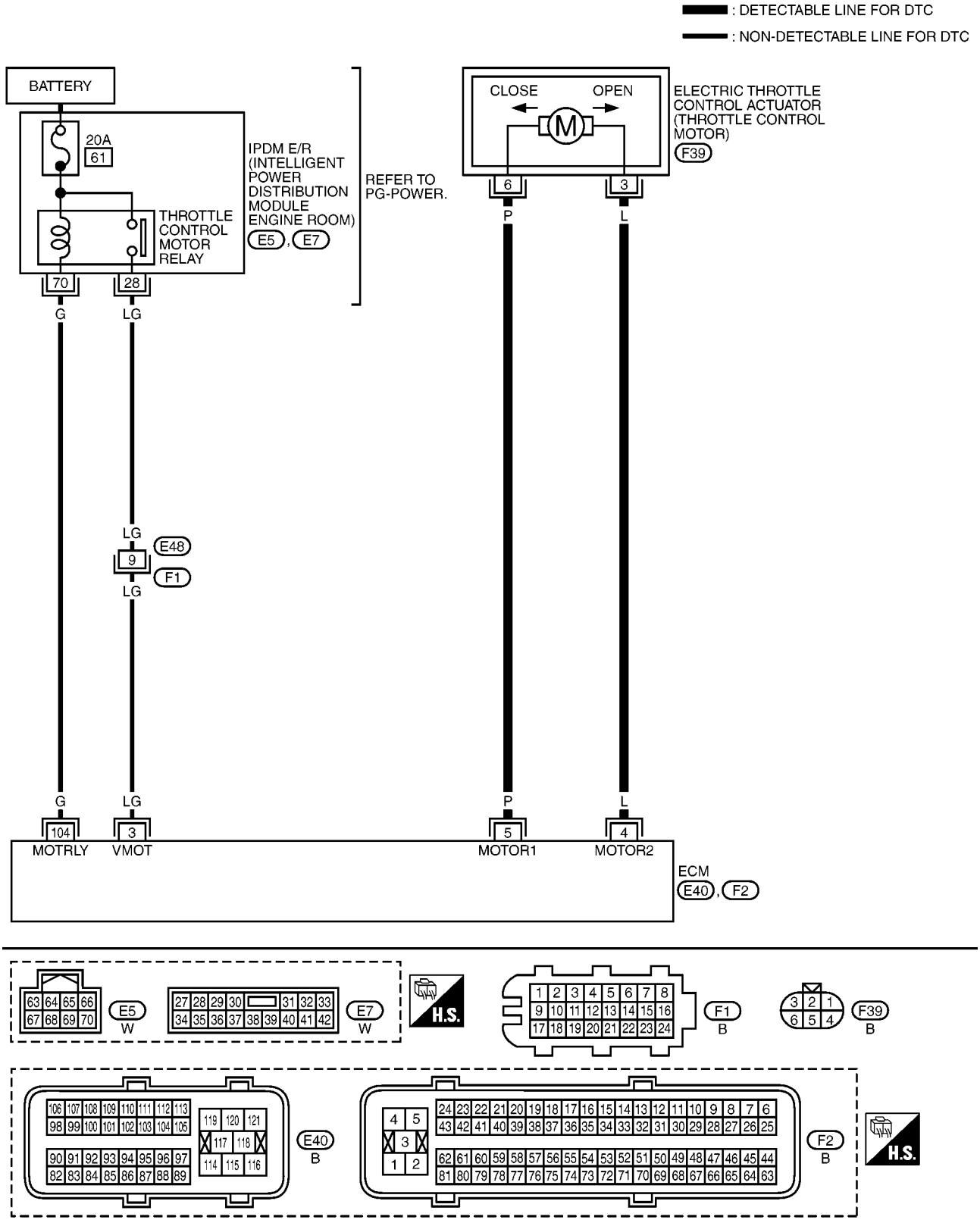

MBWA1522E

Specification data are reference values and are measured between each terminal and ground.
Pulse signal is measured by CONSULT-II.

CAUTION:
Do not use ECM ground terminals when measuring input/output voltage. Doing so may result in damage to the ECM's transistor. Use a ground other than ECM terminals, such as the ground.

TERMINAL NO.	WIRE COLOR	ITEM	CONDITION	DATA (DC Voltage)
3	LG	Throttle control motor relay power supply	**[Ignition switch: ON]**	BATTERY VOLTAGE (11 - 14V)
4	L	Throttle control motor (Close)	**[Ignition switch: ON]** ● **Engine stopped** ● Shift lever position: 1st ● Accelerator pedal: Fully released	0 - 14V★ 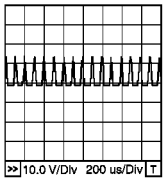 PBIB0534E
5	P	Throttle control motor (Open)	**[Ignition switch: ON]** ● **Engine stopped** ● Shift lever position: 1st ● Accelerator pedal: Fully depressed	0 - 14V★ 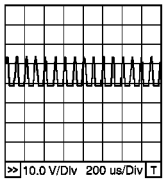 PBIB0533E
104	G	Throttle control motor relay	**[Ignition switch: OFF]**	BATTERY VOLTAGE (11 - 14V)
			[Ignition switch: ON]	0 - 1.0V

★: Average voltage for pulse signal (Actual pulse signal can be confirmed by oscilloscope.)

Diagnostic Procedure

BBS0039F

1. CHECK GROUND CONNECTIONS

1. Turn ignition switch OFF.
2. Loosen and retighten ground screws on the body.
   Refer to EC-548, "Ground Inspection" .

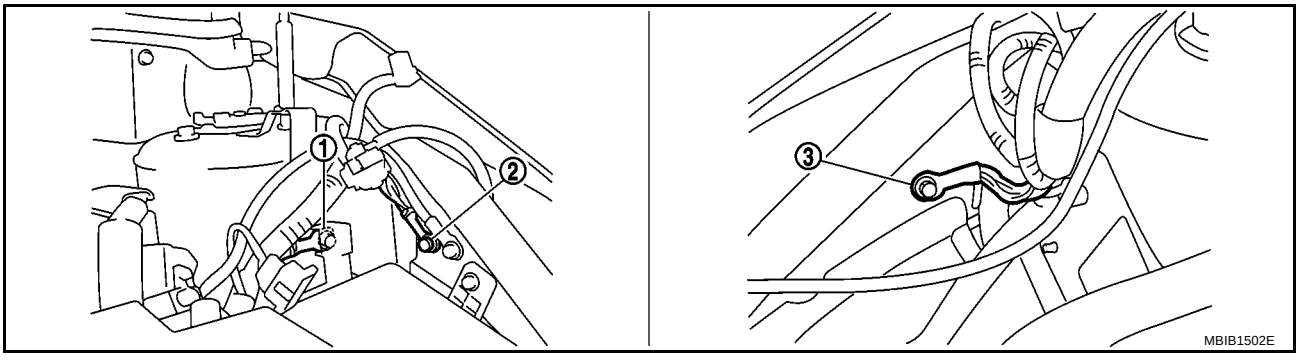

1. Body ground E44
2. Body ground E45
3. Body ground E28

OK or NG

OK >> GO TO 2.
NG >> Repair or replace ground connections.

2. CHECK THROTTLE CONTROL MOTOR OUTPUT SIGNAL CIRCUIT FOR OPEN OR SHORT

1. Disconnect electric throttle control actuator harness connector.
2. Disconnect ECM harness connector.
3. Check harness continuity between the following terminals. Refer to Wiring Diagram.

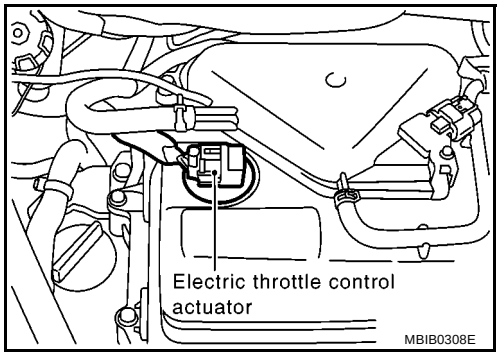

Electric throttle control actuator terminal	ECM terminal	Continuity
3	4	Should exist
	5	Should not exist
6	4	Should not exist
	5	Should exist

4. Also check harness for short to ground and short to power.

OK or NG

OK >> GO TO 3.
NG >> Repair or replace.

3. CHECK THROTTLE CONTROL MOTOR

Refer to EC-652, "Component Inspection" .

OK or NG

OK >> GO TO 4.
NG >> GO TO 5.

4. CHECK INTERMITTENT INCIDENT

Refer to EC-542, "TROUBLE DIAGNOSIS FOR INTERMITTENT INCIDENT" .

OK or NG

OK >> GO TO 5.
NG >> Repair or replace harness or connectors.

5. REPLACE ELECTRIC THROTTLE CONTROL ACTUATOR

1. Replace the electric throttle control actuator.
2. Perform EC-486, "Throttle Valve Closed Position Learning" .
3. Perform EC-486, "Idle Air Volume Learning" .

>> **INSPECTION END**

Component Inspection

BBS0039G

THROTTLE CONTROL MOTOR

1. Disconnect electric throttle control actuator harness connector.
2. Check resistance between terminals 3 and 6.

Resistance: Approximately 1 - 15 Ω [at 25 °C (77°F)]

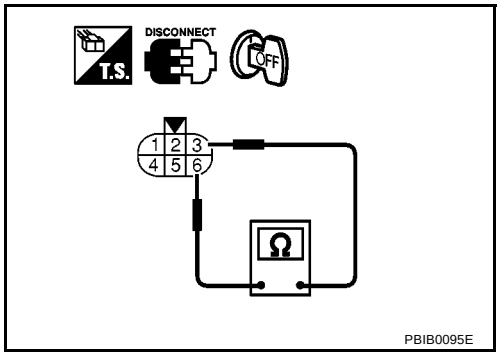

3. If NG, replace electric throttle control actuator and go to next step.
4. Perform EC-486, "Throttle Valve Closed Position Learning" .
5. Perform EC-486, "Idle Air Volume Learning" .

Removal and Installation

BBS0039H

ELECTRIC THROTTLE CONTROL ACTUATOR

Refer to EM-18, "AIR CLEANER AND AIR DUCT" .

DTC P1171 INTAKE ERROR

PFP:22365

On Board Diagnosis Logic

BBS0039I

NOTE:

- **If DTC P1171 is displayed with DTC P0108, first perform the trouble diagnosis for DTC P0108. Refer to EC-559, "DTC P0107, P0108 MANIFOLD ABSOLUTE PRESSURE SENSOR" .**
- **If DTC P1171 is displayed with DTC P1229, first perform the trouble diagnosis for DTC P1229. Refer to EC-680, "DTC P1229 SENSOR POWER SUPPLY" .**

ECM computes two intake air volume values.
1: Computed from manifold absolute pressure signal and intake air temperature signal.
2: Computed from engine revolution signal and throttle position signal.

In normal condition, value 1 is used for engine control.
If intake air leak occurred between throttle valve and intake air port, manifold absolute pressure sensor signal might increase, and then ECM increases amount of fuel injected. In this case, ECM uses value 2 for engine control instead of value1.
ECM monitors the difference between value 1 and value 2. If the difference is extremely large, ECM judges intake air leak occurs and light up the MI

This diagnosis has one trip detection logic.

DTC No.	Trouble diagnosis name	DTC detecting condition	Possible cause
P1171 1171	Intake error	A high voltage from the sensor is sent to ECM under light load driving condition.	● Harness or connectors (The manifold absolute pressure sensor circuit is open or shorted.) ● Manifold absolute pressure ● Intake air leaks ● Vacuum hoses

FAIL-SAFE MODE

When the malfunction is detected, the ECM enters fail-safe mode and MI lights up.

Detected items	Engine operating condition in fail-safe mode
Intake air system	When accelerator pedal is depressed, engine speed will not rise more than 2,500 rpm due to fuel cut.

DTC Confirmation Procedure

BBS0039J

NOTE:
If DTC Confirmation Procedure has been previously conducted, always turn ignition switch OFF and wait at least 10 seconds before conducting the next test.

WITH CONSULT-II

1. Turn ignition switch ON.
2. Select “DATA MONITOR” mode with CONSULT-II.
3. Start engine and wait at least 5 seconds.
4. If DTC is detected, go to EC-657, "Diagnostic Procedure" .

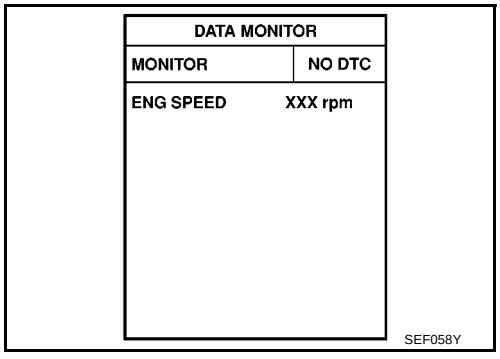

WITHOUT CONSULT-II

1. Turn ignition switch ON and wait at least 5 seconds.
2. Turn ignition switch OFF, wait at least 10 seconds and then turn ON.
3. Perform Diagnostic Test Mode II (Self-diagnostic results) with ECM.
4. If DTC is detected, go to EC-657, "Diagnostic Procedure" .

Wiring Diagram

BBS0039K

EC-AP/SEN-01

: DETECTABLE LINE FOR DTC
: NON-DETECTABLE LINE FOR DTC

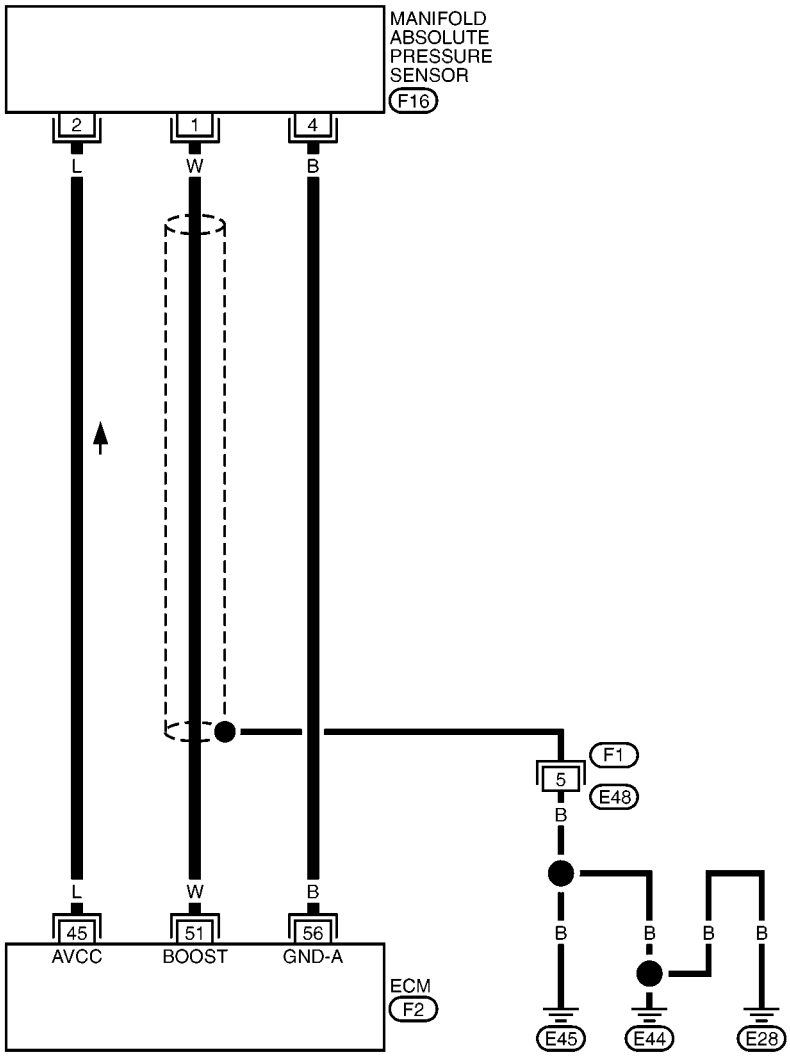

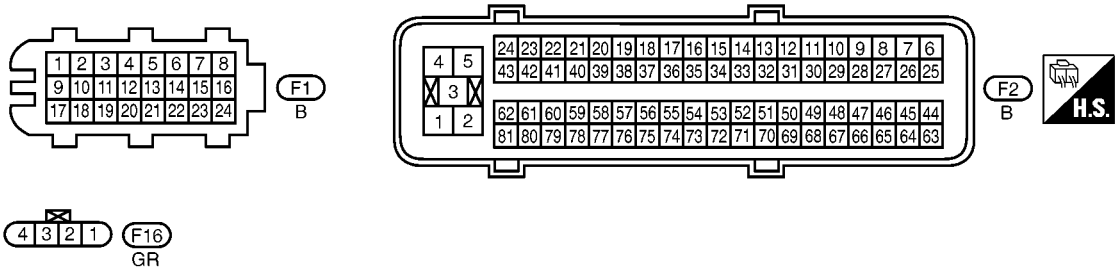

MBWA1506E

Specification data are reference values and are measured between each terminal and ground.

CAUTION:
Do not use ECM ground terminals when measuring input/output voltage. Doing so may result in damage to the ECM's transistor. Use a ground other than ECM terminals, such as the ground.

TERMINAL NO.	WIRE COLOR	ITEM	CONDITION	DATA (DC Voltage)
45	L	Sensor power supply (Manifold absolute pressure sensor)	**[Ignition switch: ON]**	Approximately 5V
51	W	Manifold absolute pressure sensor	**[Engine is running]** ● **Warm-up condition** ● Idle speed	Approximately 1.5V
			[Engine is running] ● **Warm-up condition** ● Engine speed: 2,000 rpm	Approximately 1.2V
56	B	Sensor ground (Manifold absolute pressure sensor)	**[Engine is running]** ● **Warm-up condition** ● Idle speed	Approximately 0V

Diagnostic Procedure

BBS0039L

1. CHECK INTAKE AIR LEAK

Listen for an intake air leak after the air cleaner element.

OK or NG

OK >> GO TO 2.
NG >> Repair or replace.

2. CHECK VACUUM HOSE

1. Check intake manifold vacuum hoses for clogging or disconnection. Refer to EC-509, "Vacuum Hose Drawing" .

OK or NG

OK >> GO TO 3.
NG >> Repair or replace.

3. CHECK GROUND CONNECTIONS

1. Turn ignition switch OFF.
2. Loosen and retighten ground screws on the body.
   Refer to EC-548, "Ground Inspection" .

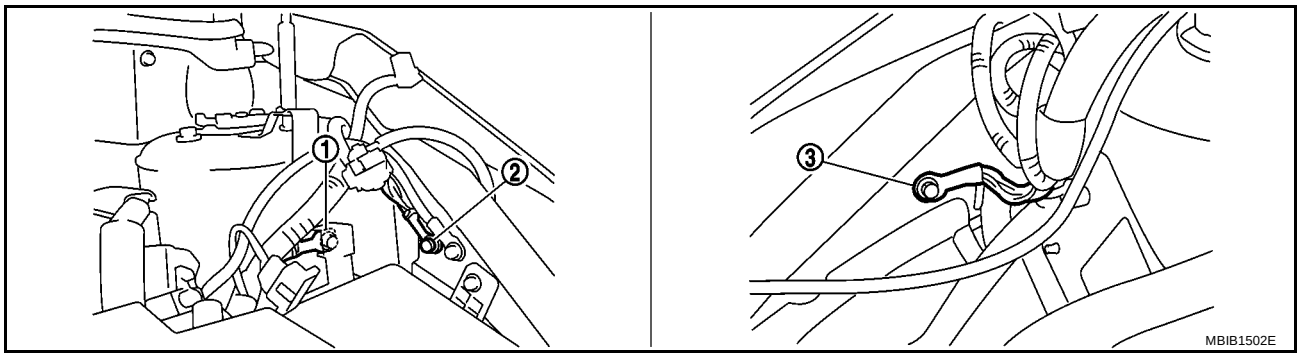

1. Body ground E44
2. Body ground E45
3. Body ground E28

OK or NG

OK >> GO TO 4.
NG >> Repair or replace ground connections.

4. CHECK MAP SENSOR POWER SUPPLY CIRCUIT

1. Disconnect manifold absolute pressure sensor harness connector.
2. Turn ignition switch ON.

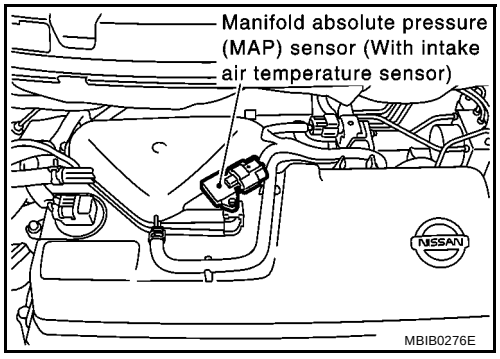

3. Check voltage between manifold absolute pressure sensor terminal 2 and ground with CONSULT-II or tester.

   Voltage: Approximately 5V

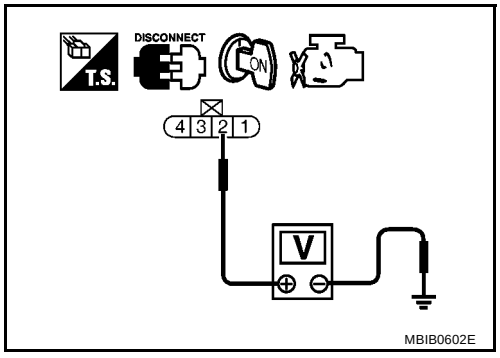

OK or NG

OK >> GO TO 5.
NG >> Repair harness or connectors.

5. CHECK MAP SENSOR GROUND CIRCUIT FOR OPEN AND SHORT

1. Turn ignition switch OFF.
2. Disconnect ECM harness connector.
3. Check harness continuity between manifold absolute pressure sensor terminal 4 and ECM terminal 56. Refer to Wiring Diagram.

   Continuity should exist.

4. Also check harness for short to ground and short to power.

OK or NG

OK >> GO TO 6.
NG >> Repair open circuit or short to ground or short to power in harness or connectors.

6. CHECK MAP SENSOR INPUT SIGNAL CIRCUIT FOR OPEN AND SHORT

1. Check harness continuity between manifold absolute pressure sensor terminal 1 and ECM terminal 51. Refer to Wiring Diagram.

   Continuity should exist.

2. Also check harness for short to ground and short to power.

OK or NG

OK >> GO TO 7.
NG >> Repair open circuit or short to ground or short to power in harness or connectors.

7. CHECK MAP SENSOR

Refer to EC-563, "Component Inspection" .

OK or NG

OK >> GO TO 8.
NG >> Replace manifold absolute pressure sensor.

8. CHECK INTERMITTENT INCIDENT

Refer to EC-542, "TROUBLE DIAGNOSIS FOR INTERMITTENT INCIDENT" .

>> **INSPECTION END**

DTC P1211 TCS CONTROL UNIT

PFP:47850

Description

BBS003ZQ

The malfunction information related to TCS is transferred through the CAN communication line from “ABS actuator and electric unit (control unit)” to ECM.
Be sure to erase the malfunction information such as DTC not only for “ABS actuator and electric unit (control unit)” but also for ECM after TCS related repair.

On Board Diagnosis Logic

BBS003ZR

Freeze frame data is not stored in the ECM for this self-diagnosis. The MI will not light up for this self-diagnosis.

DTC No.	Trouble diagnosis name	DTC detecting condition	Possible cause
P1211 1211	TCS control unit	ECM receives a malfunction information from “ABS actuator and electric unit (Control unit)”.	● ABS actuator and electric unit (control unit) ● TCS related parts

DTC Confirmation Procedure

BBS003ZS

TESTING CONDITION:
Before performing the following procedure, confirm that battery voltage is more than 10.5V at idle.

WITH CONSULT-II

1. Turn ignition switch ON.
2. Select “DATA MONITOR” mode with CONSULT-II.
3. Start engine and let it idle for at least 60 seconds.
4. If 1st trip DTC is detected, go to EC-660, "Diagnostic Procedure" .

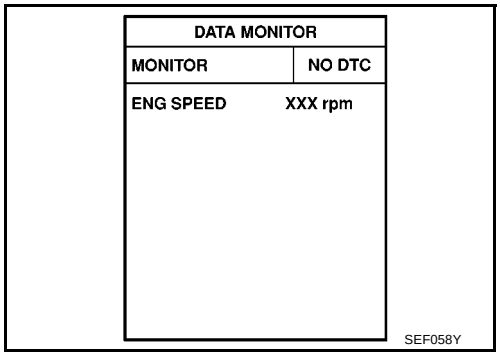

WITHOUT CONSULT-II

1. Start engine and let it idle for at least 60 seconds.
2. Turn ignition switch OFF, wait at least 10 seconds and turn ON.
3. Perform Diagnostic Test Mode II (Self-diagnostic results) with ECM.
4. If 1st trip DTC is detected, go to EC-660, "Diagnostic Procedure" .

Diagnostic Procedure

BBS003ZT

Go to BRC-49, "TROUBLE DIAGNOSIS" .

DTC P1212 TCS COMMUNICATION LINE

PFP:47850

Description

BBS0039M

NOTE:

- **If DTC P1212 is displayed with DTC U1001, first perform the trouble diagnosis for DTC U1001. Refer to EC-549, "DTC U1001 CAN COMMUNICATION LINE" .**
- **If DTC P1212 is displayed with DTC U1010, first perform the trouble diagnosis for DTC U1010. Refer to EC-552, "DTC U1010 CAN COMMUNICATION" .**

This CAN communication line is used to control the smooth engine operation during the TCS operation. Pulse signals are exchanged between ECM and “ABS actuator and electric unit (control unit)”.
Be sure to erase the malfunction information such as DTC not only for “ABS actuator and electric unit (control unit)” but also for ECM after TCS related repair.

On Board Diagnosis Logic

BBS0039N

The MI will not light up for this self-diagnosis.
Freeze frame data is not stored in the ECM for this self-diagnosis.

DTC No.	Trouble diagnosis name	DTC detecting condition	Possible cause
P1212 1212	TCS communication line	ECM can not receive the information from “ABS actuator and electric unit (control unit)” continuously.	● Harness or connectors (The CAN communication line is open or shorted.) ● ABS actuator and electric unit (control unit). ● Dead (Weak) battery

DTC Confirmation Procedure

BBS0039O

TESTING CONDITION:
Before performing the following procedure, confirm that battery voltage is more than 10.5V at idle.

WITH CONSULT-II

1. Turn ignition switch ON.
2. Select “DATA MONITOR” mode with CONSULT-II.
3. Start engine and let it idle for at least 10 seconds.
4. If 1st trip DTC is detected, go to EC-661, "Diagnostic Procedure" .

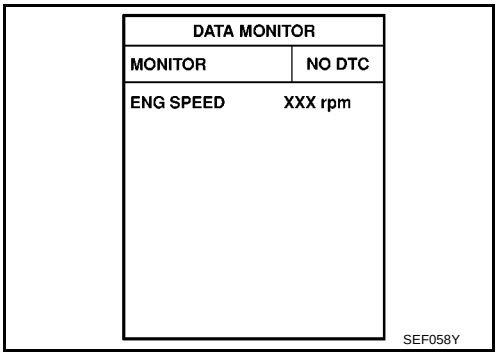

WITHOUT CONSULT-II

1. Start engine and let it idle for at least 10 seconds.
2. Turn ignition switch OFF, wait at least 10 seconds and then turn ON.
3. Perform Diagnostic Test Mode II (Self-diagnostic results) with ECM.
4. If 1st trip DTC is detected, go to EC-661, "Diagnostic Procedure" .

Diagnostic Procedure

BBS0039P

Refer to BRC-49, "TROUBLE DIAGNOSIS" .

DTC P1217 ENGINE OVER TEMPERATURE

PFP:00000

System Description

BBS0047Z

NOTE:

- **If DTC P1217 is displayed with DTC U1001, first perform the trouble diagnosis for DTC U1001. Refer to EC-549, "DTC U1001 CAN COMMUNICATION LINE" .**
- **If DTC P1217 is displayed with DTC U1010, first perform the trouble diagnosis for DTC U1010. Refer to EC-552, "DTC U1010 CAN COMMUNICATION" .**

COOLING FAN CONTROL

Sensor	Input Signal to ECM	ECM Function	Actuator
Crankshaft position sensor (POS) Camshaft position sensor (PHASE)	Engine speed*1	Cooling fan control	IPDM E/R (Cooling fan relay)
Battery	Battery voltage*1		
Wheel sensor	Vehicle speed*2		
Engine coolant temperature sensor	Engine coolant temperature		
Air conditioner switch*3	Air conditioner ON signal*2		
Refrigerant pressure sensor*3	Refrigerant pressure		

*1: ECM determines the start signal status by the signals of engine speed and battery voltage.
*2: This signal is sent to ECM through CAN communication line.
*3: Models with air conditioner.

The ECM controls the cooling fan corresponding to the vehicle speed, engine coolant temperature, refrigerant pressure, and air conditioner ON signal. The control system has 3-step control [HIGH/LOW/OFF] (models with A/C) or 2 step control [ON/OFF] (models without A/C).
The ECM controls cooling fan relays through CAN communication line.

OPERATION

Models with A/C

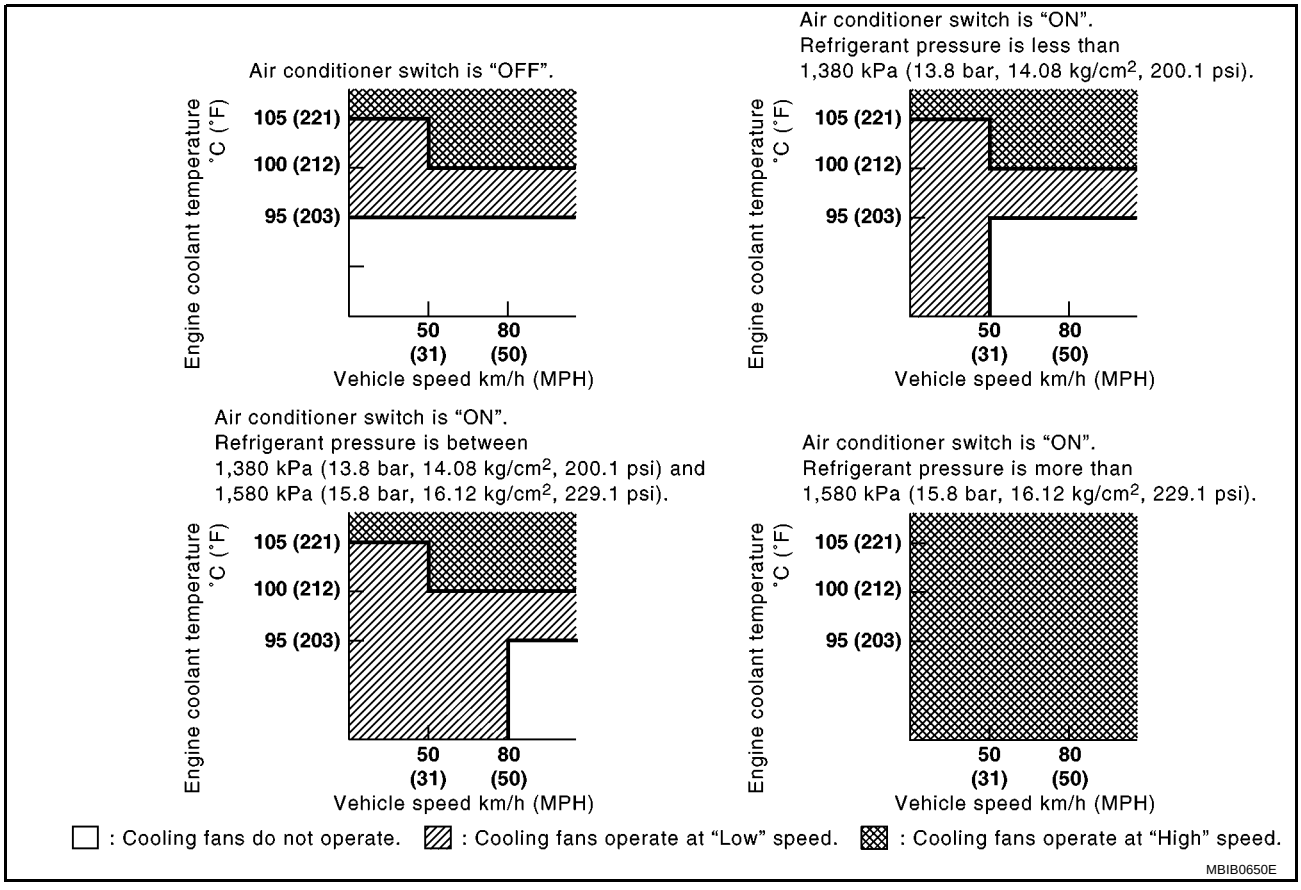

Models without A/C

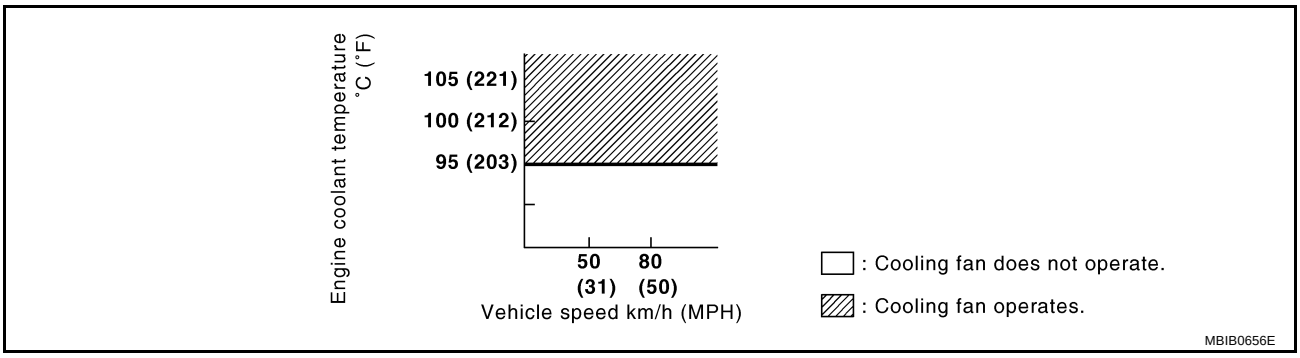

CONSULT-II Reference Value in Data Monitor Mode

BBS00480

Specification data are reference values.

MONITOR ITEM	CONDITION		SPECIFICATION
AIR COND SIG	● Engine: After warming up, idle the engine	Air conditioner switch: OFF	OFF
		Air conditioner switch: ON (Compressor operates.)	ON
COOLING FAN	● Engine: After warming up, idle the engine ● Air conditioner switch: OFF	Engine coolant temperature: 94°C (201°F) or less	OFF
		Engine coolant temperature: Between 95°C (203°F) and 104°C (210°F)	LOW*
		Engine coolant temperature: 105°C (212°F) or more	HI*

*: Models without air conditioner, cooling fan operates only ON and OFF operation, but CONSULT-II display will change OFF, LOW and HI depends on engine coolant temperature.

On Board Diagnosis Logic

BBS00481

If the cooling fan or another component in the cooling system malfunctions, engine coolant temperature will rise. When the engine coolant temperature reaches an abnormally high temperature condition, a malfunction is indicated.

This self-diagnosis has the one trip detection logic.

DTC No.	Trouble diagnosis name	DTC detecting condition	Possible cause
P1217 1217	Engine over temperature (Overheat)	● Cooling fan does not operate properly (Overheat). ● Cooling fan system does not operate properly (Overheat). ● Engine coolant was not added to the system using the proper filling method. ● Engine coolant is not within the specified range.	● Harness or connectors (The cooling fan circuit is open or shorted.) ● Cooling fan ● IPDM E/R (Cooling fan relay) ● Radiator hose ● Radiator ● Reservoir tank cap (Models with A/C) ● Radiator cap (Models without A/C) ● Water pump ● Thermostat For more information, refer to EC-674, "Main 12 Causes of Overheating" .

CAUTION:

When a malfunction is indicated, be sure to replace the coolant. Refer to CO-9, "Changing Engine coolant" . Also, replace the engine oil. Refer to LU-7, "Changing Engine Oil" .

1. **Fill radiator with coolant up to specified level with a filling speed of 2 liters per minute. Be sure to use coolant with the proper mixture ratio. Refer to MA-26, "Engine Coolant Mixture Ratio" .**

2. After refilling coolant, run engine to ensure that no water-flow noise is emitted.

Overall Function Check

BBS00482

Use this procedure to check the overall function of the cooling fan. During this check, a DTC might not be confirmed.

WARNING:

Never remove the radiator cap (Models without A/C) or reservoir tank cap (Models with A/C) when the engine is hot. Serious burns could be caused by high pressure fluid escaping from the radiator (Models without A/C) or reservoir tank (Models with A/C).

Wrap a thick cloth around cap. Carefully remove the cap by turning it a quarter turn to allow built-up pressure to escape. Then turn the cap all the way off.

WITH CONSULT-II

1. Check the coolant level in the reservoir tank and radiator.
   Allow engine to cool before checking coolant level.
   If the coolant level in the reservoir tank and/or radiator is below the proper range, skip the following steps and go to EC-668, "Diagnostic Procedure" .
2. Confirm whether customer filled the coolant or not. If customer filled the coolant, skip the following steps and go to EC-668, "Diagnostic Procedure" .
3. Turn ignition switch ON.

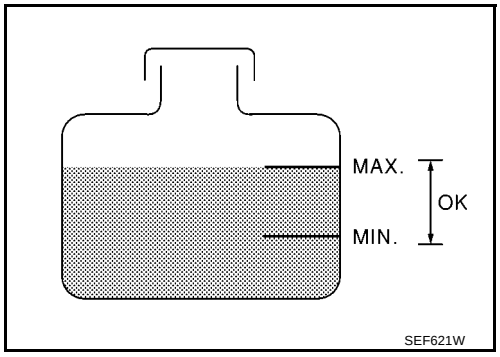

4. Perform “COOLING FAN” in “ACTIVE TEST” mode with CONSULT-II.
5. If the results are NG, go to EC-668, "Diagnostic Procedure" .

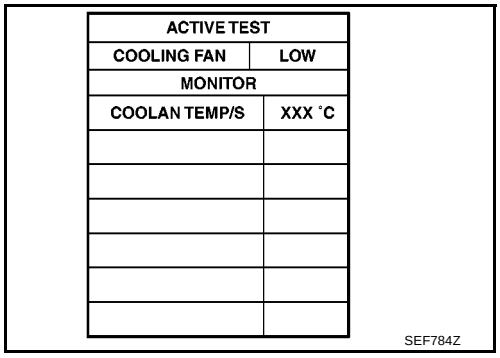

ACTIVE TEST	
COOLING FAN	LOW
MONITOR	
COOLAN TEMP/S	XXX °C

SEF784Z

WITHOUT CONSULT-II

Models with Air Conditioner

1. Check the coolant level in the reservoir tank and radiator.
   Allow engine to cool before checking coolant level.
   If the coolant level in the reservoir tank and/or radiator is below the proper range, skip the following steps and go to EC-668, "Diagnostic Procedure" .
2. Confirm whether customer filled the coolant or not. If customer filled the coolant, skip the following steps and go to EC-668, "Diagnostic Procedure" .
3. Start engine.
   CAUTION:
   Be careful not to overheat engine.
4. Set temperature control lever to full cold position.
5. Turn air conditioner switch ON.
6. Turn blower fan switch ON.
7. Run engine at idle for a few minutes with air conditioner operating.
   CAUTION:
   Be careful not to overheat engine.

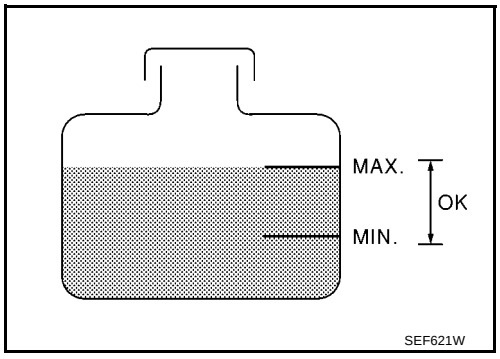

8. Make sure that cooling fans operates at low speed.
   If NG, go to EC-668, "Diagnostic Procedure" .
   If OK, go to the following step.
9. Turn ignition switch OFF.
10. Turn air conditioner switch and blower fan switch OFF.
11. Disconnect engine coolant temperature sensor harness connector.
12. Connect 150Ω resistor to engine coolant temperature sensor harness connector.

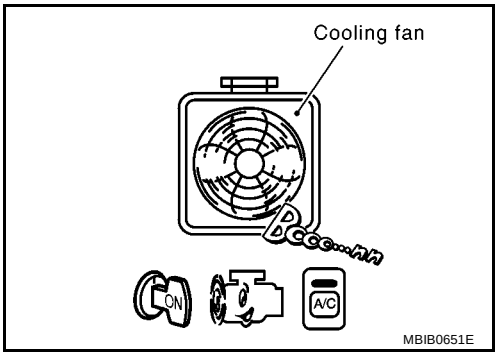

13. Restart engine and make sure that cooling fan operates at higher speed than low speed.
    CAUTION:
    Be careful not to overheat engine.
14. If NG, go to EC-668, "Diagnostic Procedure" .

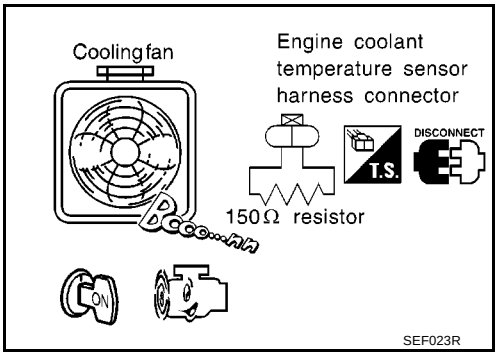

Models without Air Conditioner

1. Check the coolant level in the reservoir tank and radiator.
   Allow engine to cool before checking coolant level.
   If the coolant level in the reservoir tank and/or radiator is below the proper range, skip the following steps and go to EC-668, "Diagnostic Procedure" .
2. Confirm whether customer filled the coolant or not. If customer filled the coolant, skip the following steps and go to EC-668, "Diagnostic Procedure" .
3. Disconnect engine coolant temperature sensor harness connector.
4. Connect 150Ω resistor to engine coolant temperature sensor harness connector.
5. Start engine and make that cooling fan operates. Be careful not to overheat engine.
6. If NG, go to EC-668, "Diagnostic Procedure" .

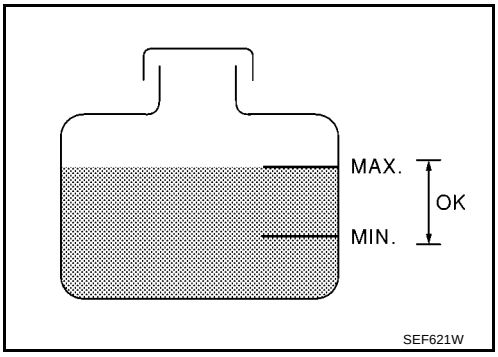

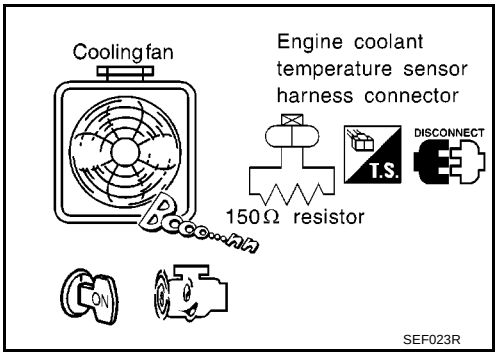

Wiring Diagram

BBS00483

MODELS WITH AIR CONDITIONER

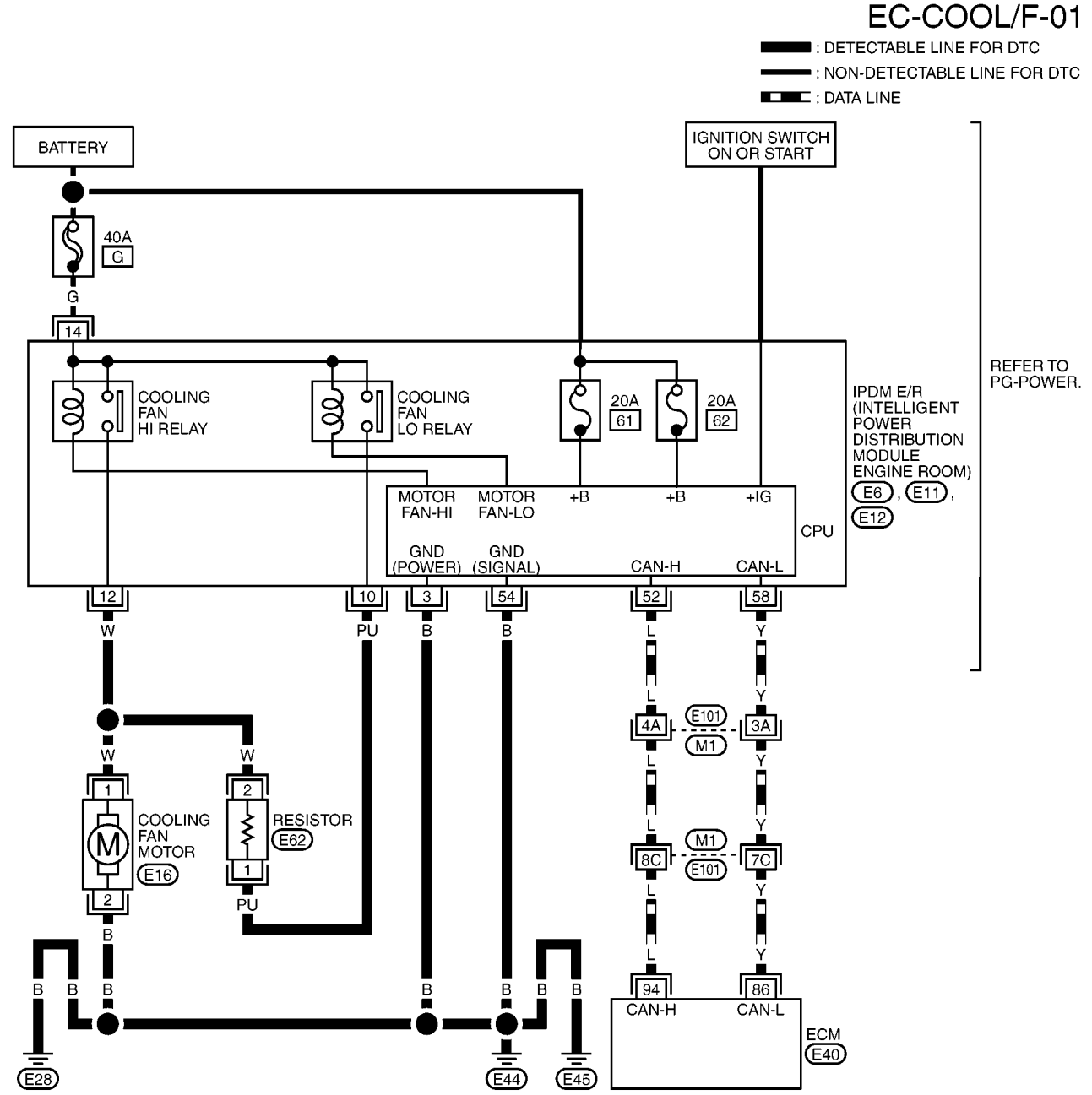

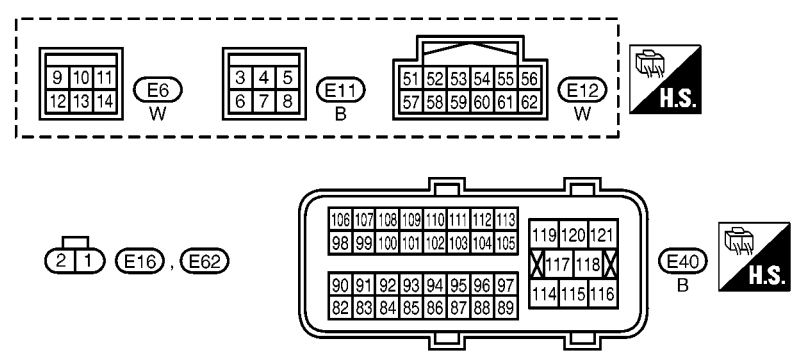

REFER TO THE FOLLOWING.
M1 - SUPER MULTIPLE JUNCTION (SMJ)

MBWA1523E

MODELS WITHOUT AIR CONDITIONER

EC-COOL/F-02

: DETECTABLE LINE FOR DTC
: NON-DETECTABLE LINE FOR DTC
: DATA LINE

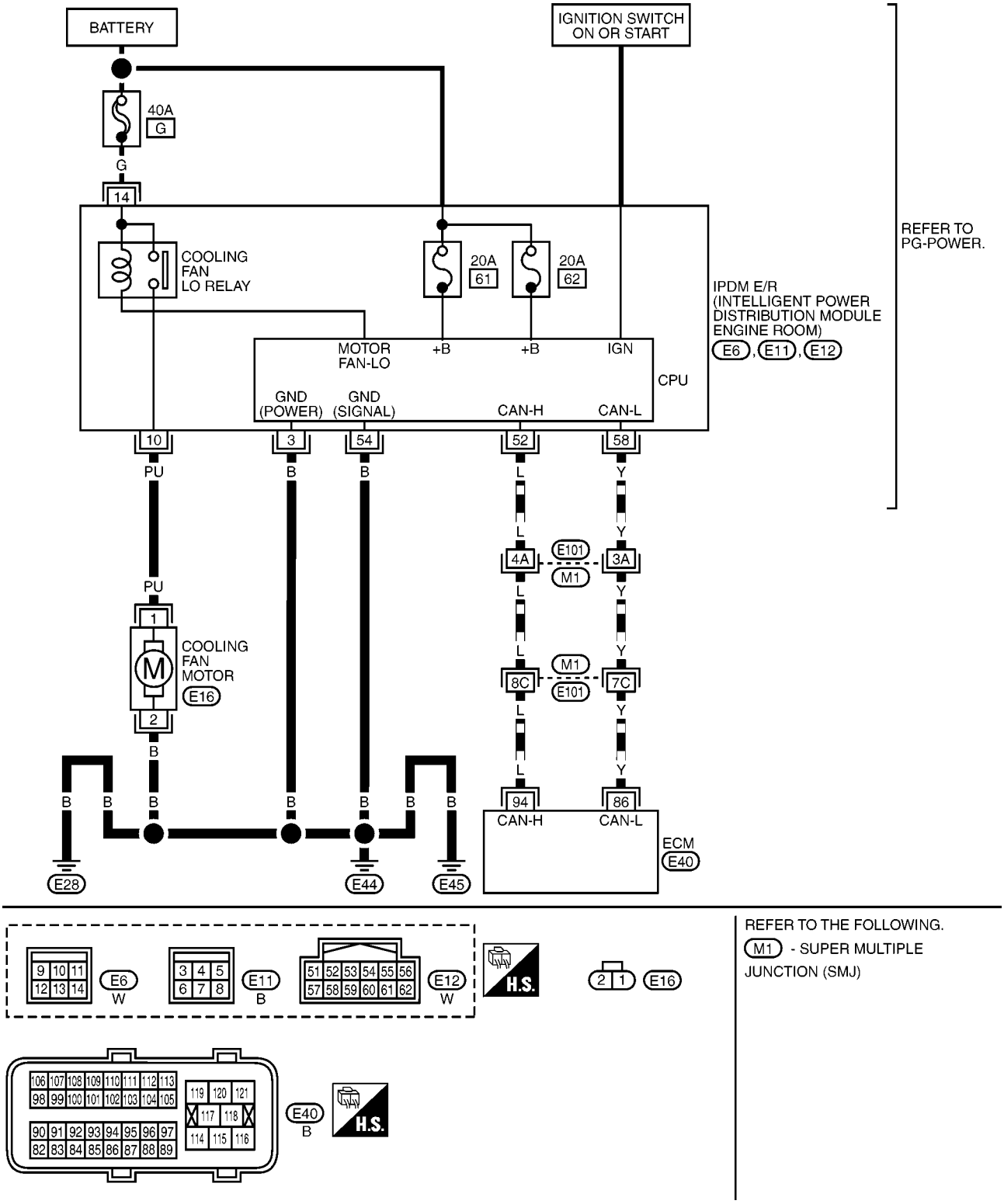

MBWA1524E

Diagnostic Procedure

BBS00484

PROCEDURE FOR MODELS WITH AIR CONDITIONER

1. INSPECTION START

Do you have CONSULT-II?

Yes or No

Yes >> GO TO 2.
No >> GO TO 4.

2. CHECK COOLING FAN LOW SPEED OPERATION

With CONSULT-II

1. Turn ignition switch ON.
2. Perform “COOLING FAN” in “ACTIVE TEST” mode with CONSULT-II and touch “LOW” on the CONSULT-II screen.
3. Make sure that cooling fan operates at low speed.

OK or NG

OK >> GO TO 3.
NG >> Check cooling fan low speed control circuit. (Go to EC-670, "Procedure A" .)

ACTIVE TEST	
COOLING FAN	LOW
MONITOR	
COOLAN TEMP/S	XXX °C

SEF784Z

3. CHECK COOLING FAN HIGH SPEED OPERATION

With CONSULT-II

1. Touch “HIGH” on the CONSULT-II screen.
2. Make sure that cooling fan operate at higher speed than low speed.

OK or NG

OK >> GO TO 6.
NG >> Check cooling fan high speed control circuit. (Go to EC-671, "Procedure B" .)

ACTIVE TEST	
COOLING FAN	HIGH
MONITOR	
COOLAN TEMP/S	XXX °C

SEF785Z

4. CHECK COOLING FAN LOW SPEED OPERATION

Without CONSULT-II

1. Start engine and let it idle.
2. Turn air conditioner switch ON.
3. Turn blower fan switch ON.
4. Make sure that cooling fan operates at low speed.

OK or NG

OK >> GO TO 5.
NG >> Check cooling fan low speed control circuit. (Go to EC-670, "Procedure A" .)

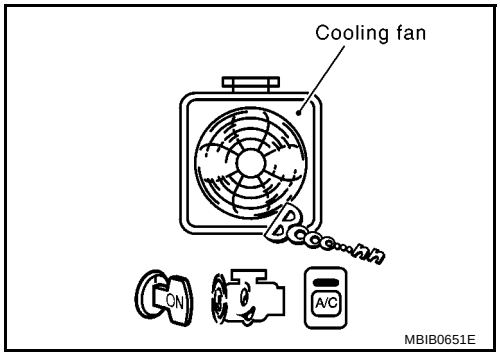

MBIB0651E

5. CHECK COOLING FAN HIGH SPEED OPERATION

Without CONSULT-II

1. Turn ignition switch OFF.
2. Turn air conditioner switch and blower fan switch OFF.
3. Disconnect engine coolant temperature sensor harness connector.
4. Connect 150Ω resistor to engine coolant temperature sensor harness connector.
5. Restart engine and make sure that cooling fan operate at higher speed than low speed.

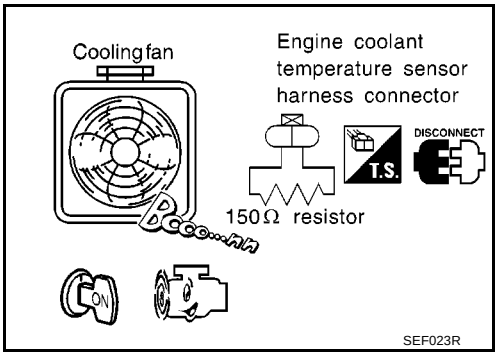

OK or NG

OK >> GO TO 6.
NG >> Check cooling fan high speed control circuit. (Go to EC-671, "Procedure B" .)

6. CHECK COOLING SYSTEM FOR LEAK

Refer to CO-8, "ENGINE COOLANT" .

OK or NG

OK >> GO TO 8.
NG >> GO TO 7.

7. DETECT MALFUNCTIONING PART

Check the following for leak.

- Hose
- Radiator
- Water pump (Refer to CO-17, "WATER PUMP" .)

>> Repair or replace.

8. CHECK RESERVOIR TANK CAP

Refer to CO-16, "Checking Reservoir Tank Cap (Models with A/C)" .

OK or NG

OK >> GO TO 9.
NG >> Replace reservoir tank cap.

9. CHECK COMPONENT PARTS

Check the following.

- Thermostat. Refer to CO-19, "THERMOSTAT" .
- Engine coolant temperature sensor. Refer to EC-569, "Component Inspection" .

OK or NG

OK >> GO TO 10.
NG >> Replace malfunctioning component.

10. CHECK MAIN 12 CAUSES

If the cause cannot be isolated, go to EC-674, "Main 12 Causes of Overheating" .

>> **INSPECTION END**

Procedure A

1. CHECK POWER SUPPLY CIRCUIT

1. Turn ignition switch OFF.
2. Disconnect IPDM E/R harness connector E6.
3. Check voltage between IPDM E/R terminal 14 and ground with CONSULT-II or tester.

Voltage: Battery voltage

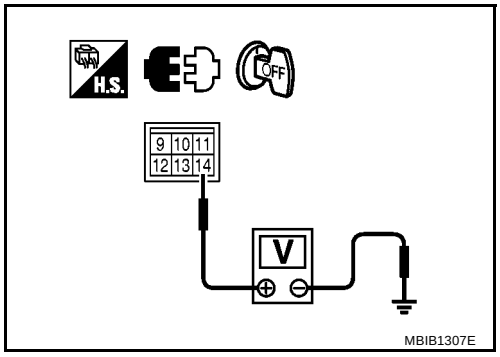

OK or NG

OK >> GO TO 3.
NG >> GO TO 2.

2. DETECT MALFUNCTIONING PART

Check the following.

- 40A fusible link
- Harness for open or short between IPDM E/R and battery

>> Repair open circuit or short to ground or short to power in harness or connectors.

3. CHECK COOLING FAN MOTORS CIRCUIT

1. Disconnect cooling fan motor harness connector.
2. Check harness continuity between cooling fan motor terminal 1 and IPDM E/R terminal 10, cooling fan motor terminal 2 and ground. Refer to Wiring Diagram.

Continuity should exist.

3. Also check harness for short to ground and short to power.

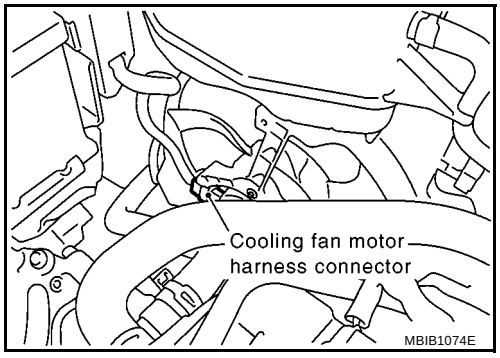

OK or NG

OK >> GO TO 5.
NG >> GO TO 4.

4. DETECT MALFUNCTIONING PART

Check the following.

- Harness for open or short between cooling fan motor and IPDM E/R
- Harness for open or short between cooling fan motor and ground
- Harness for open or short between resistor and IPDM E/R
- Harness for open or short between resistor and cooling fan motor
- Resistor E62

>> Repair open circuit or short to ground or short to power in harness or connectors.

5. CHECK COOLING FAN MOTOR

Refer to EC-675, "Component Inspection" .

OK or NG

OK >> GO TO 6.
NG >> Replace cooling fan motor.

6. CHECK INTERMITTENT INCIDENT

Perform EC-542, "TROUBLE DIAGNOSIS FOR INTERMITTENT INCIDENT" .

OK or NG

OK >> Replace IPDM E/R. Refer to PG-18, "IPDM E/R (INTELLIGENT POWER DISTRIBUTION MODULE ENGINE ROOM)" .

NG >> Repair or replace harness or connector.

Procedure B

1. CHECK COOLING FAN MOTORS CIRCUIT

1. Turn ignition switch OFF.
2. Disconnect IPDM E/R harness connector E6.
3. Disconnect cooling fan motor harness connector.
4. Check harness continuity between IPDM E/R terminal 12 and cooling fan motor terminal 1, cooling fan motor terminal 2 and ground. Refer to Wiring Diagram.

   Continuity should exist.

5. Also check harness for short to ground and short to power.

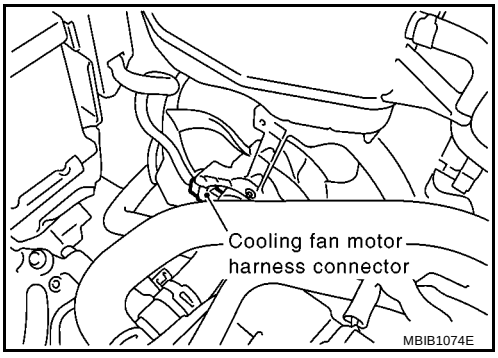

OK or NG

OK >> GO TO 3.

NG >> GO TO 2.

2. DETECT MALFUNCTIONING PART

Check the following.

- Harness for open or short between cooling fan motor and IPDM E/R
- Harness for open or short between cooling fan motor and ground

>> Repair open circuit or short to ground or short to power in harness or connectors.

3. CHECK COOLING FAN MOTOR

Refer to EC-675, "Component Inspection" .

OK or NG

OK >> GO TO 4.

NG >> Replace cooling fan motor.

4. CHECK INTERMITTENT INCIDENT

Perform EC-542, "TROUBLE DIAGNOSIS FOR INTERMITTENT INCIDENT" .

OK or NG

OK >> Replace IPDM E/R. Refer to PG-18, "IPDM E/R (INTELLIGENT POWER DISTRIBUTION MODULE ENGINE ROOM)" .

NG >> Repair or replace harness or connector.

PROCEDURE FOR MODELS WITHOUT AIR CONDITIONER

1. INSPECTION START

Do you have CONSULT-II?

Yes or No

Yes >> GO TO 2.
No >> GO TO 3.

2. CHECK COOLING FAN OPERATION

With CONSULT-II

1. Turn ignition switch ON.
2. Perform “COOLING FAN” in “ACTIVE TEST” mode with CONSULT-II and touch “LOW” on the CONSULT-II screen.
3. Make sure that cooling fan operates.

OK or NG

OK >> GO TO4.
NG >> Check cooling fan control circuit. (Go to EC-673, "Procedure A" .)

ACTIVE TEST	
COOLING FAN	LOW
MONITOR	
COOLAN TEMP/S	XXX °C

SEF784Z

3. CHECK COOLING FAN OPERATION

Without CONSULT-II

1. Turn ignition switch OFF.
2. Disconnect engine coolant temperature sensor harness connector.
3. Connect 150Ω resistor to engine coolant temperature sensor harness connector.
4. Restart engine and make sure that cooling fan operates.

OK or NG

OK >> GO TO 4.
NG >> Check cooling fan control circuit. (Go to EC-673, "Procedure A" .)

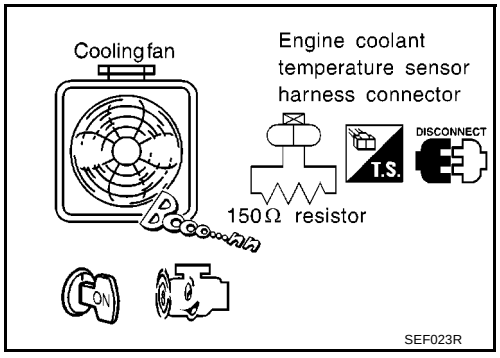

SEF023R

4. CHECK COOLING SYSTEM FOR LEAK

Refer to CO-8, "ENGINE COOLANT" .

OK or NG

OK >> GO TO 6.
NG >> GO TO 5.

5. DETECT MALFUNCTIONING PART

Check the following for leak.

- Hose
- Radiator
- Water pump (Refer to CO-17, "WATER PUMP" .)

>> Repair or replace.

6. CHECK RADIATOR CAP

Refer to CO-15, "Checking Radiator Cap (Models without A/C)" .

OK or NG

OK >> GO TO 7.
NG >> Replace radiator cap.

7. CHECK THERMOSTAT

Check the following.

- Thermostat. Refer to CO-19, "THERMOSTAT" .
- Engine coolant temperature sensor. Refer to EC-569, "Component Inspection" .

OK or NG

OK >> GO TO 8.
NG >> Replace malfunctioning component.

8. CHECK MAIN 12 CAUSES

If the cause cannot be isolated, go to EC-674, "Main 12 Causes of Overheating" .

>> **INSPECTION END**

Procedure A

1. CHECK POWER SUPPLY CIRCUIT

1. Turn ignition switch OFF.
2. Disconnect IPDM E/R harness connector E6.
3. Check voltage between IPDM E/R terminal 14 and ground with CONSULT-II or tester.

Voltage: Battery voltage

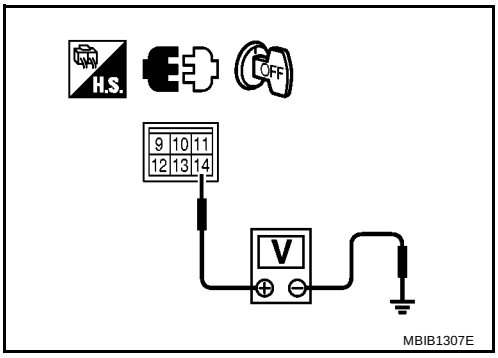

OK or NG

OK >> GO TO 3.
NG >> GO TO 2.

2. DETECT MALFUNCTIONING PART

Check the following.

- 40A fusible link
- Harness for open or short between IPDM E/R and battery

>> Repair open circuit or short to ground or short to power in harness or connectors.

3. CHECK COOLING FAN MOTORS CIRCUIT

1. Disconnect cooling fan motor harness connector.
2. Check harness continuity between cooling fan motor terminal 1 and IPDM E/R terminal 10, cooling fan motor terminal 2 and ground.
   Refer to wiring diagram.

   Continuity should exist.

3. Also check harness for short to ground and short to power.

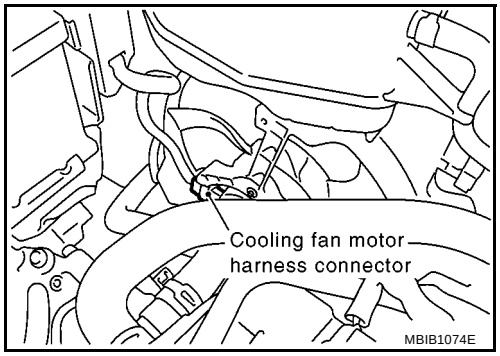

OK or NG

OK >> GO TO 5.
NG >> GO TO 4.

4. DETECT MALFUNCTIONING PART

Check the following.

- Harness for open or short between cooling fan motor and IPDM E/R
- Harness for open or short between cooling fan motor and ground

>> Repair open circuit or short to ground or short to power in harness or connectors.

5. CHECK COOLING FAN MOTOR

Refer to EC-675, "Component Inspection" .

OK or NG

OK >> GO TO 6.
NG >> Replace cooling fan motor.

6. CHECK INTERMITTENT INCIDENT

Perform EC-542, "TROUBLE DIAGNOSIS FOR INTERMITTENT INCIDENT" .

OK or NG

OK >> Replace IPDM E/R. Refer to PG-18, "IPDM E/R (INTELLIGENT POWER DISTRIBUTION MODULE ENGINE ROOM)" .
NG >> Repair or replace harness or connector.

Main 12 Causes of Overheating

BBS00485

Engine	Step	Inspection item	Equipment	Standard	Reference page
OFF	1	● Blocked radiator ● Blocked condenser ● Blocked radiator grille ● Blocked bumper	● Visual	No blocking	—
	2	● Coolant mixture	● Coolant tester	50 - 50% coolant mixture	See MA-26, "Engine Coolant Mixture Ratio" .
	3	● Coolant level	● Visual	Coolant up to MAX level in reservoir tank and radiator filler neck	See CO-8, "LEVEL CHECK" .
	4*5	● Radiator cap	● Pressure tester	59 - 98 kPa (0.59 - 0.98 bar, 0.6 - 1.0 kg/cm^2 , 9 - 14 psi) (Limit)	See CO-15, "Checking Radiator Cap (Models without A/C)" .
	4*6	● Reservoir tank cap	● Pressure tester	88 kPa (0.88 bar, 0.90 kg/cm^2 , 12.8psi)	See CO-16, "Checking Reservoir Tank Cap (Models with A/C)" .

Engine	Step	Inspection item	Equipment	Standard	Reference page
ON*2	5	● Coolant leaks	● Visual	No leaks	See CO-8, "LEAK CHECK" .
ON*2	6	● Thermostat	● Touch the upper and lower radiator hoses	Both hoses should be hot	See CO-19, "THERMOSTAT" , and CO-12, "RADIATOR" .
ON*1	7	● Cooling fan	● CONSULT-II	Operating	See trouble diagnosis for DTC P1217 (EC-662).
OFF	8	● Combustion gas leak	● Color checker chemical tester 4 Gas analyzer	Negative	—
ON*3	9	● Coolant temperature gauge	● Visual	Gauge less than 3/4 when driving	—
		● Coolant overflow to reservoir tank	● Visual	No overflow during driving and idling	See CO-9, "Changing Engine coolant" .
OFF*4	10	● Coolant return from reservoir tank to radiator	● Visual	Should be initial level in reservoir tank	See CO-8, "LEVEL CHECK" .
OFF	11	● Cylinder head	● Straight gauge feeler gauge	0.1 mm (0.004 in) Maximum distortion (warping)	See EM-60, "CYLINDER HEAD" .
	12	● Cylinder block and pistons	● Visual	No scuffing on cylinder walls or piston	See EM-74, "CYLINDER BLOCK" .

*1: Turn the ignition switch ON.
*2: Engine running at 3,000 rpm for 10 minutes.
*3: Drive at 90 km/h (55 MPH) for 30 minutes and then let idle for 10 minutes.
*4: After 60 minutes of cool down time.
*5: Models without A/C.
*6: Models with A/C.
For more information, refer to CO-5, "OVERHEATING CAUSE ANALYSIS" .

Component Inspection

BBS00486

COOLING FAN MOTOR

1. Disconnect cooling fan motor harness connector.
2. Supply cooling fan motor terminals with battery voltage and check operation.

	Terminals	
	(+)	(-)
Cooling fan motor	1	2

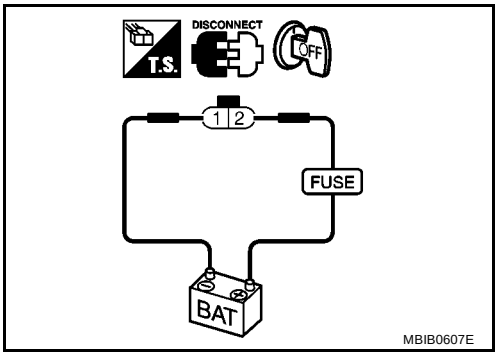

DTC P1225 TP SENSOR

PFP:16119

Component Description

BBS0039Y

Electric throttle control actuator consists of throttle control motor, throttle position sensor, etc. The throttle position sensor responds to the throttle valve movement.
The throttle position sensor has the two sensors. These sensors are a kind of potentiometers which transform the throttle valve position into output voltage, and emit the voltage signal to the ECM. In addition, these sensors detect the opening and closing speed of the throttle valve and feed the voltage signals to the ECM. The ECM judges the current opening angle of the throttle valve from these signals and the ECM controls the throttle control motor to make the throttle valve opening angle properly in response to driving condition.

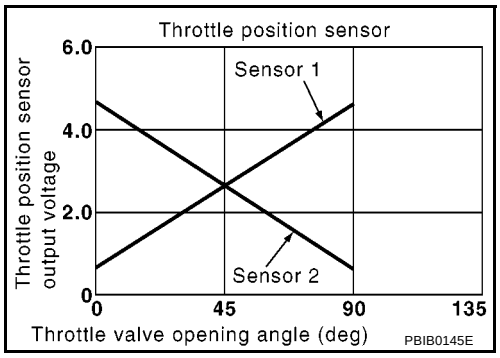

On Board Diagnosis Logic

BBS0039Z

The MI will not light up for this self-diagnosis.

DTC No.	Trouble diagnosis name	DTC detecting condition	Possible cause
P1225 1225	Closed throttle position learning performance	Closed throttle position learning value is excessively low.	● Electric throttle control actuator (TP sensor 1 and 2)

DTC Confirmation Procedure

BBS003A0

NOTE:
If DTC Confirmation Procedure has been previously conducted, always turn ignition switch OFF and wait at least 10 seconds before conducting the next test.
TESTING CONDITION:
Before performing the following procedure, confirm that battery voltage is more than 10V at idle.

WITH CONSULT-II

1. Turn ignition switch ON.
2. Select “DATA MONITOR” mode with CONSULT-II.
3. Turn ignition switch OFF and wait at least 10 seconds.
4. Turn ignition switch ON.
5. If 1st trip DTC is detected, go to EC-677, "Diagnostic Procedure" .

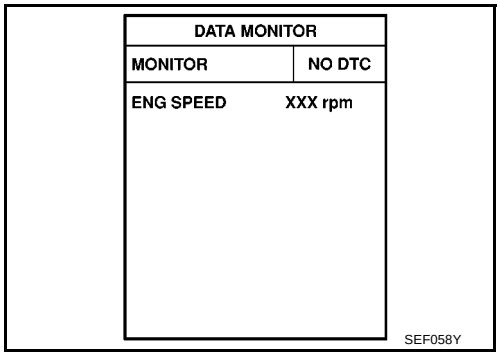

WITHOUT CONSULT-II

1. Turn ignition switch ON.
2. Turn ignition switch OFF, wait at least 10 seconds and then turn ON.
3. Perform Diagnostic Test Mode II (Self-diagnostic results) with ECM.
4. If 1st trip DTC is detected, go to EC-677, "Diagnostic Procedure" .

Diagnostic Procedure

BBS003A1

1. CHECK ELECTRIC THROTTLE CONTROL ACTUATOR VISUALLY

1. Turn ignition switch OFF.
2. Remove the intake air duct.
3. Check if foreign matter is caught between the throttle valve and the housing.

OK or NG

OK >> GO TO 2.
NG >> Remove the foreign matter and clean the electric throttle control actuator inside.

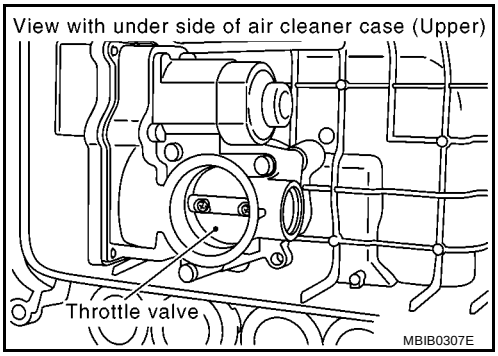

2. REPLACE ELECTRIC THROTTLE CONTROL ACTUATOR

1. Replace the electric throttle control actuator.
2. Perform EC-486, "Throttle Valve Closed Position Learning" .
3. Perform EC-486, "Idle Air Volume Learning" .

>> **INSPECTION END**

Removal and Installation

BBS003A2

ELECTRIC THROTTLE CONTROL ACTUATOR

Refer to EM-18, "AIR CLEANER AND AIR DUCT" .

DTC P1226 TP SENSOR

PFP:16119

Component Description

BBS003A3

Electric throttle control actuator consists of throttle control motor, throttle position sensor, etc. The throttle position sensor responds to the throttle valve movement.
The throttle position sensor has the two sensors. These sensors are a kind of potentiometers which transform the throttle valve position into output voltage, and emit the voltage signal to the ECM. In addition, these sensors detect the opening and closing speed of the throttle valve and feed the voltage signals to the ECM. The ECM judges the current opening angle of the throttle valve from these signals and the ECM controls the throttle control motor to make the throttle valve opening angle properly in response to driving condition.

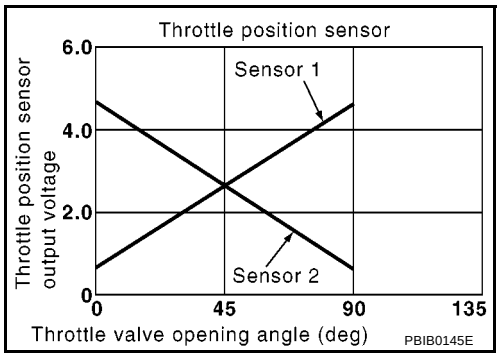

On Board Diagnosis Logic

BBS003A4

The MI will not light up for this self-diagnosis.

DTC No.	Trouble diagnosis name	DTC detecting condition	Possible cause
P1226 1226	Closed throttle position learning performance	Closed throttle position learning is not performed successfully, repeatedly.	● Electric throttle control actuator (TP sensor 1 and 2)

DTC Confirmation Procedure

BBS003A5

NOTE:
If DTC Confirmation Procedure has been previously conducted, always turn ignition switch OFF and wait at least 10 seconds before conducting the next test.
TESTING CONDITION:
Before performing the following procedure, confirm that battery voltage is more than 10V at idle.

WITH CONSULT-II

1. Turn ignition switch ON.
2. Select “DATA MONITOR” mode with CONSULT-II.
3. Turn ignition switch OFF and wait at least 10 seconds.
4. Turn ignition switch ON.
5. Repeat steps 3 and 4 for 32 times.
6. If 1st trip DTC is detected, go to EC-679, "Diagnostic Procedure" .

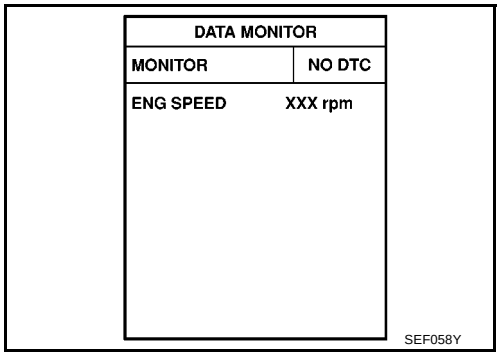

WITHOUT CONSULT-II

1. Turn ignition switch ON.
2. Turn ignition switch OFF, wait at least 10 seconds and then turn ON.
3. Repeat step 2 for 32 times.
4. Perform Diagnostic Test Mode II (Self-diagnostic results) with ECM.
5. If 1st trip DTC is detected, go to EC-679, "Diagnostic Procedure" .

Diagnostic Procedure

BBS003A6

1. CHECK ELECTRIC THROTTLE CONTROL ACTUATOR VISUALLY

1. Turn ignition switch OFF.
2. Remove the intake air duct.
3. Check if foreign matter is caught between the throttle valve and the housing.

OK or NG

OK >> GO TO 2.
NG >> Remove the foreign matter and clean the electric throttle control actuator inside.

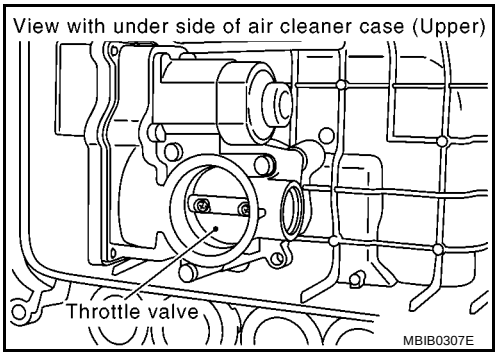

2. REPLACE ELECTRIC THROTTLE CONTROL ACTUATOR

1. Replace the electric throttle control actuator.
2. Perform EC-486, "Throttle Valve Closed Position Learning" .
3. Perform EC-486, "Idle Air Volume Learning" .

>> **INSPECTION END**

Removal and Installation

BBS003A7

ELECTRIC THROTTLE CONTROL ACTUATOR

Refer to EM-18, "AIR CLEANER AND AIR DUCT" .

DTC P1229 SENSOR POWER SUPPLY

PFP:16119

On Board Diagnosis Logic

BBS003A8

This self-diagnosis has the one trip detection logic.

DTC No.	Trouble diagnosis name	DTC detecting condition	Possible cause
P1229 1229	Sensor power supply circuit short	ECM detects a voltage of power source for sensor is excessively low or high.	● Harness or connectors (APP sensor 1 circuit is shorted.) (Manifold absolute pressure sensor is shorted.) (Refrigerant pressure sensor circuit is shorted.) ● Accelerator pedal position sensor (APP sensor 1) ● Manifold absolute pressure sensor ● Refrigerant pressure sensor

FAIL-SAFE MODE

When the malfunction is detected, the ECM enters fail-safe mode and the MI lights up.

Engine operation condition in fail-safe mode
ECM stops the electric throttle control actuator control, throttle valve is maintained at a fixed opening (approx. 5 degrees) by the return spring.

DTC Confirmation Procedure

BBS003A9

NOTE:
If DTC Confirmation Procedure has been previously conducted, always turn ignition switch OFF and wait at least 10 seconds before conducting the next test.
TESTING CONDITION:
Before performing the following procedure, confirm that battery voltage is more than 10V at idle.

WITH CONSULT-II

1. Turn ignition switch ON.
2. Select “DATA MONITOR” mode with CONSULT-II.
3. Start engine and let it idle for 1 second.
4. If DTC is detected, go to EC-685, "Diagnostic Procedure" .

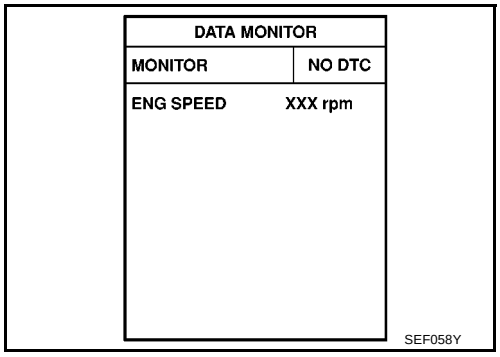

WITHOUT CONSULT-II

1. Start engine and let it idle for 1 seconds.
2. Turn ignition switch OFF, wait at least 10 seconds and then turn ON.
3. Perform Diagnostic Test Mode II (Self-diagnostic results) with ECM.
4. If DTC is detected, go to EC-685, "Diagnostic Procedure" .

Wiring Diagram
LHD MODELS

BBS003AA

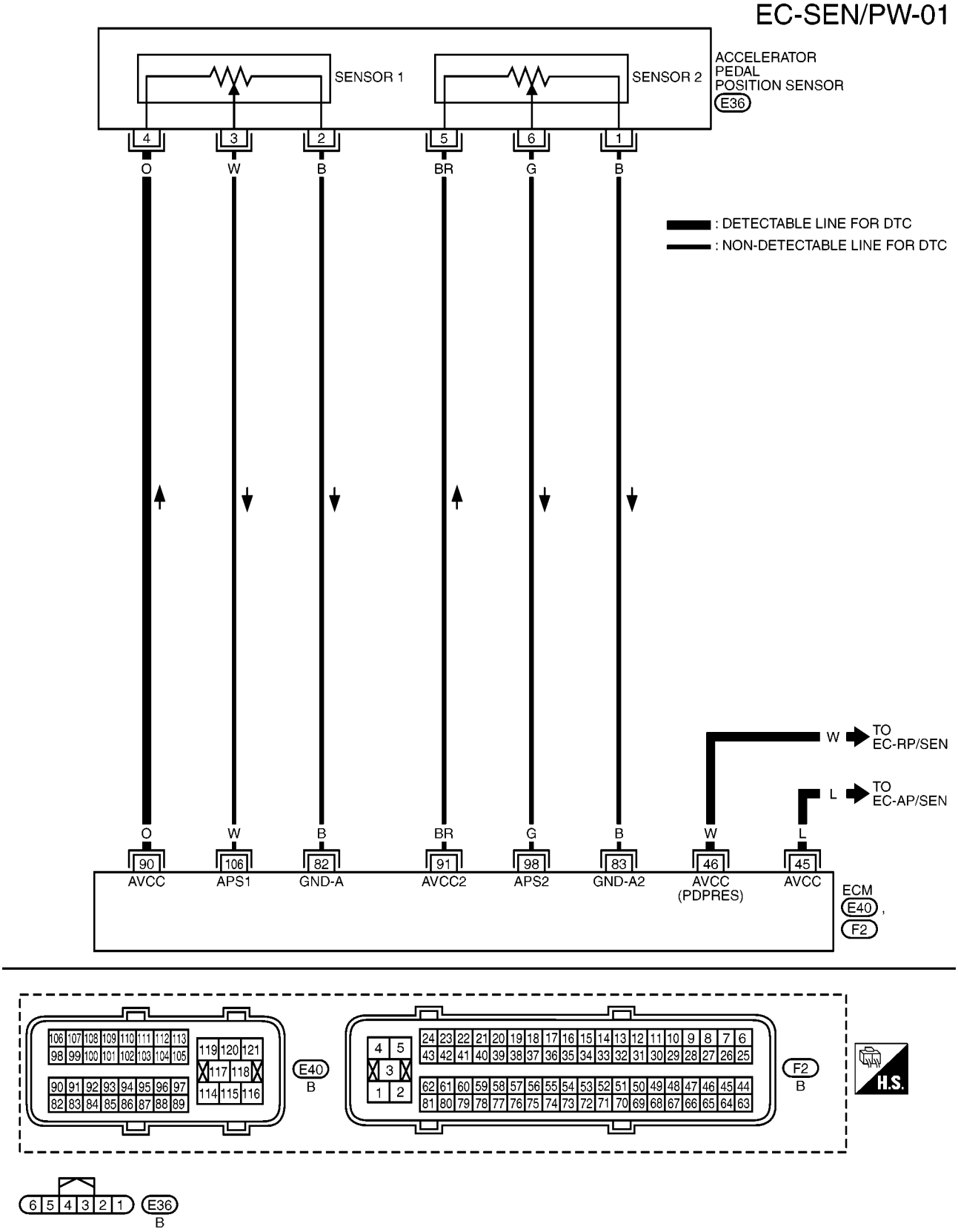

MBWA1525E

Specification data are reference values and are measured between each terminal and ground.

CAUTION:

Do not use ECM ground terminals when measuring input/output voltage. Doing so may result in damage to the ECM's transistor. Use a ground other than ECM terminals, such as the ground.

TERMINAL NO.	WIRE COLOR	ITEM	CONDITION	DATA (DC Voltage)
45	L	Sensor power supply (Manifold absolute pressure sensor)	**[Ignition switch: ON]**	Approximately 5V
46	W	Sensor power supply (Refrigerant pressure sensor)	**[Ignition switch: ON]**	Approximately 5V
82	B	Sensor ground (APP sensor 1)	**[Engine is running]** ● **Warm-up condition** ● Idle speed	Approximately 0V
83	B	Sensor ground (APP sensor 2)	**[Engine is running]** ● **Warm-up condition** ● Idle speed	Approximately 0V
90	O	Sensor power supply (APP sensor 1)	**[Ignition switch: ON]**	Approximately 5V
91	BR	Sensor power supply (APP sensor 2)	**[Ignition switch: ON]**	Approximately 5V
98	G	Accelerator pedal position sensor 2	**[Ignition switch: ON]** ● **Engine stopped** ● Accelerator pedal: Fully released	0.3 - 0.6V
			[Ignition switch: ON] ● **Engine stopped** ● Accelerator pedal: Fully depressed	1.95 - 2.4V
106	W	Accelerator pedal position sensor 1	**[Ignition switch: ON]** ● **Engine stopped** ● Accelerator pedal: Fully released	0.6 - 0.9V
			[Ignition switch: ON] ● **Engine stopped** ● Accelerator pedal: Fully depressed	3.9 - 4.7V

RHD MODELS

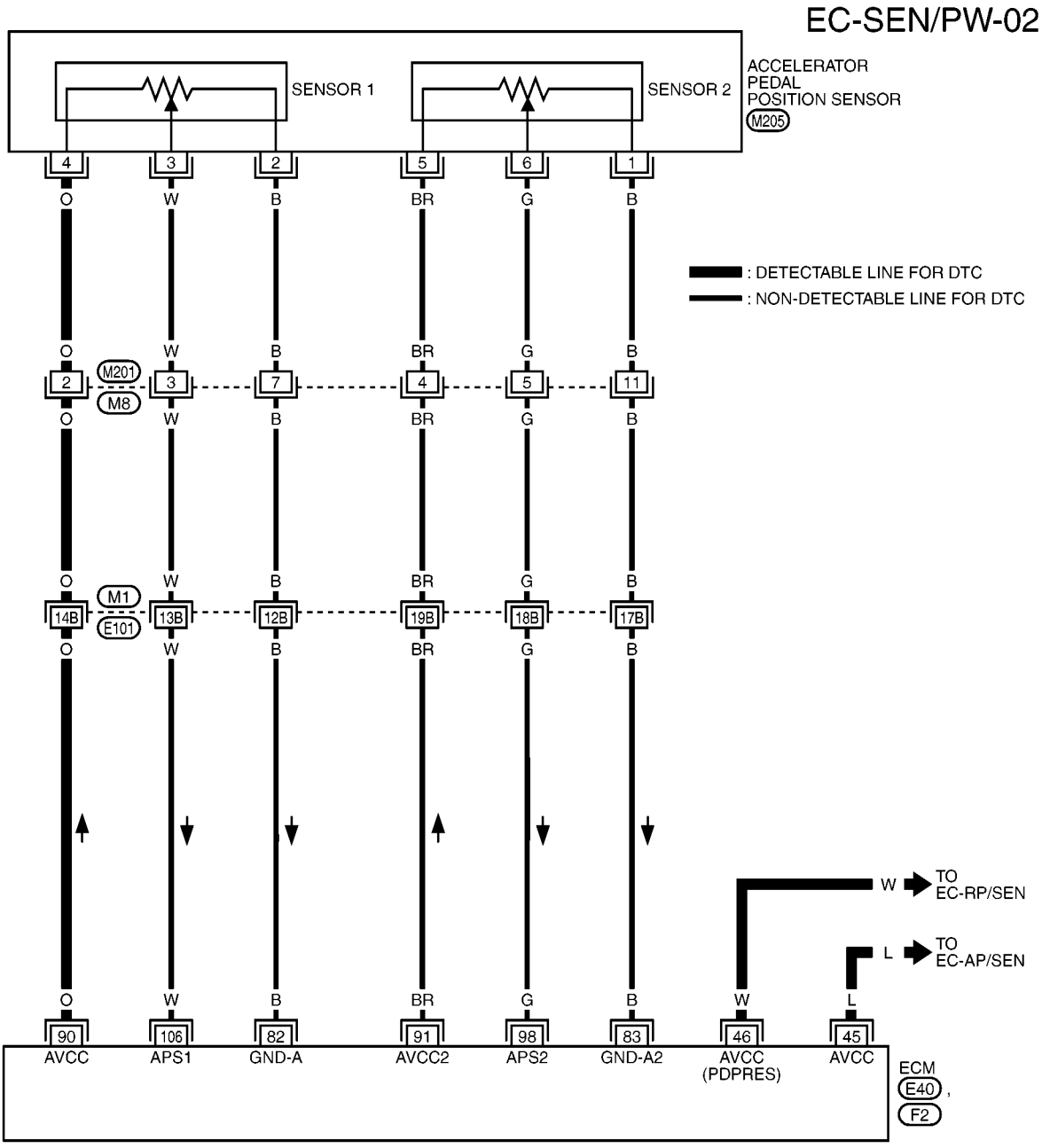

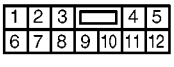

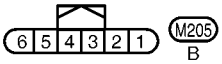

REFER TO THE FOLLOWING.
M1 - SUPER MULTIPLE JUNCTION (SMJ)

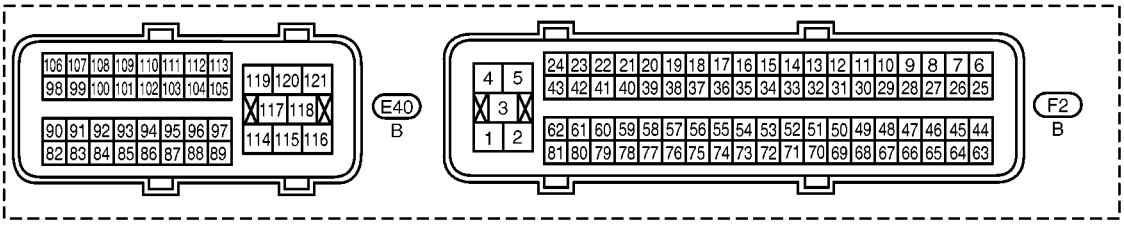

MBWA1526E

Specification data are reference values and are measured between each terminal and ground.

CAUTION:

Do not use ECM ground terminals when measuring input/output voltage. Doing so may result in damage to the ECM's transistor. Use a ground other than ECM terminals, such as the ground.

TERMINAL NO.	WIRE COLOR	ITEM	CONDITION	DATA (DC Voltage)
45	L	Sensor power supply (Manifold absolute pressure sensor)	**[Ignition switch: ON]**	Approximately 5V
46	W	Sensor power supply (Refrigerant pressure sensor)	**[Ignition switch: ON]**	Approximately 5V
82	B	Sensor ground (APP sensor 1)	**[Engine is running]** ● **Warm-up condition** ● Idle speed	Approximately 0V
83	B	Sensor ground (APP sensor 2)	**[Engine is running]** ● **Warm-up condition** ● Idle speed	Approximately 0V
90	O	Sensor power supply (APP sensor 1)	**[Ignition switch: ON]**	Approximately 5V
91	BR	Sensor power supply (APP sensor 2)	**[Ignition switch: ON]**	Approximately 5V
98	G	Accelerator pedal position sensor 2	**[Ignition switch: ON]** ● **Engine stopped** ● Accelerator pedal: Fully released	0.3 - 0.6V
			[Ignition switch: ON] ● **Engine stopped** ● Accelerator pedal: Fully depressed	1.95 - 2.4V
106	W	Accelerator pedal position sensor 1	**[Ignition switch: ON]** ● **Engine stopped** ● Accelerator pedal: Fully released	0.6 - 0.9V
			[Ignition switch: ON] ● **Engine stopped** ● Accelerator pedal: Fully depressed	3.9 - 4.7V

Diagnostic Procedure

BBS003AB

1. CHECK GROUND CONNECTIONS

1. Turn ignition switch OFF.
2. Loosen and retighten ground screws on the body.
   Refer to EC-548, "Ground Inspection" .

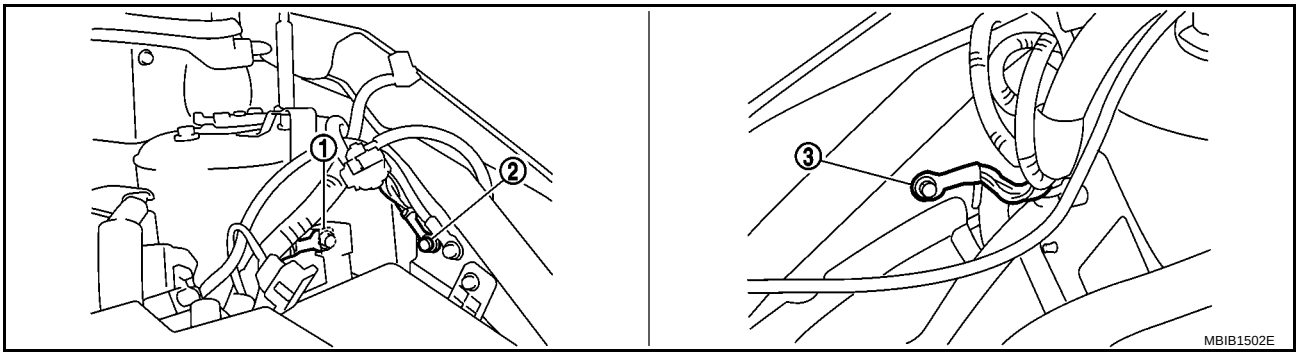

1. Body ground E44
2. Body ground E45
3. Body ground E28

OK or NG

OK >> GO TO 2.
NG >> Repair or replace ground connections.

2. CHECK ACCELERATOR PEDAL POSITION SENSOR 1 POWER SUPPLY CIRCUIT-I

1. Disconnect accelerator pedal position sensor (APP) sensor harness connector.
2. Turn ignition switch ON.

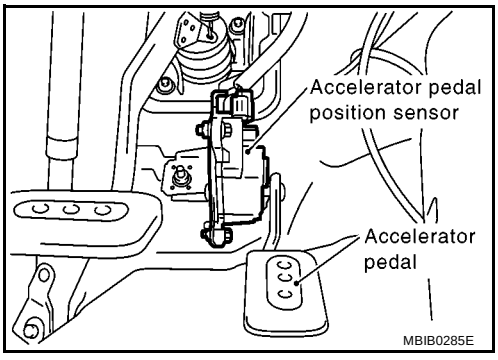

3. Check voltage between APP sensor terminal 4 and ground with CONSULT-II or tester.

Voltage: Approximately 5V

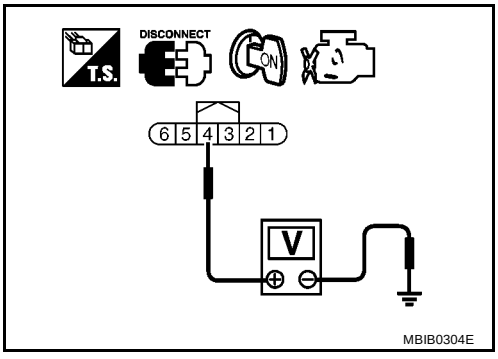

OK or NG

OK >> GO TO 7.
NG >> GO TO 3.

3. CHECK ACCELERATOR PEDAL POSITION SENSOR 1 POWER SUPPLY CIRCUIT-II

1. Turn ignition switch OFF.
2. Disconnect ECM harness connector.
3. Check harness continuity between APP sensor terminal 4 and ECM terminal 90.
   Refer to Wiring Diagram.

Continuity should exist.

OK or NG

OK >> GO TO 5.
NG (LHD models)>>Repair open circuit.
NG (RHD models)>>GO TO 4.

4. DETECT MALFUNCTIONING PART

Check the following.

- Harness connectors M201, M8
- Harness connectors M1, E101
- Harness for open or short between APP sensor and ECM

>> Repair open circuit.

5. CHECK SENSOR POWER SUPPLY CIRCUIT

Check harness for short to power and short to ground, between the following terminals

ECM terminal	Sensor terminal	Reference Wiring Diagram
90	APP sensor terminal 4	EC-681
45	Manifold absolute pressure sensor terminal 2	EC-560
46	Refrigerant pressure sensor terminal 3	EC-795

OK or NG

OK >> GO TO 6.
NG >> Repair short to ground or short to power in harness or connectors.

6. CHECK COMPONENTS

Check the following.

- Manifold absolute pressure sensor (Refer to EC-563, "Component Inspection" .)
- Refrigerant pressure sensor (Refer to ATC-85, "COMPONENT INSPECTION" or MTC-51, "COMPONENT INSPECTION" .)

OK or NG

OK >> GO TO 9.
NG >> Replace malfunctioning component.

7. CHECK APP SENSOR

Refer to EC-716, "Component Inspection" .

OK or NG

OK >> GO TO 9.
NG >> GO TO 8.

8. REPLACE ACCELERATOR PEDAL ASSEMBLY

1. Replace accelerator pedal assembly.
2. Perform EC-486, "Accelerator Pedal Released Position Learning" .
3. Perform EC-486, "Throttle Valve Closed Position Learning" .
4. Perform EC-486, "Idle Air Volume Learning" .

>> **INSPECTION END**

9. CHECK INTERMITTENT INCIDENT

Refer to EC-542, "TROUBLE DIAGNOSIS FOR INTERMITTENT INCIDENT" .

>> **INSPECTION END**

DTC P1706 PNP SWITCH

PFP:32006

Component Description

BBS003AC

When the shift lever position is Neutral, park/neutral position (PNP) switch is ON.
ECM detects the position because the continuity of the line (the ON signal) exists.

CONSULT-II Reference Value in Data Monitor Mode

BBS003AD

Specification data are reference values.

MONITOR ITEM	CONDITION		SPECIFICATION
P/N POSI SW	● Ignition switch: ON	Shift lever: Neutral	ON
		Shift lever: Except above	OFF

On Board Diagnosis Logic

BBS003AE

DTC No.	Trouble diagnosis name	DTC detecting condition	Possible cause
P1706 1706	Park/neutral position switch	The signal of the park/neutral position (PNP) switch is not changed in the process of engine starting and driving.	● Harness or connectors [The park/neutral position (PNP) switch circuit is open or shorted.] ● Park/neutral position (PNP) switch

Overall Function Check

BBS003AF

Use this procedure to check the overall function of the park/neutral position (PNP) switch circuit. During this check, a 1st trip DTC might not be confirmed.

WITH CONSULT-II

1. Turn ignition switch ON.
2. Select “P/N POSI SW” in “DATA MONITOR” mode with CONSULT-II. Then check the “P/N POSI SW” signal under the following conditions.

Position (Shift lever)	Known-good signal
Neutral position	ON
Except the above position	OFF

If NG, go to EC-690, "Diagnostic Procedure" .

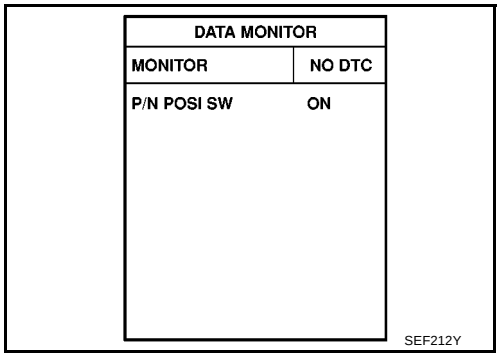

WITHOUT CONSULT-II

1. Turn ignition switch ON.
2. Check voltage between ECM terminal 102 (PNP switch signal) and ground under the following conditions.

Condition (Gear position)	Voltage V (Known-good data)
Neutral position	Approx. 0
Except the above position	BATTERY VOLTAGE (11 - 14V)

3. If NG, go to EC-690, "Diagnostic Procedure" .

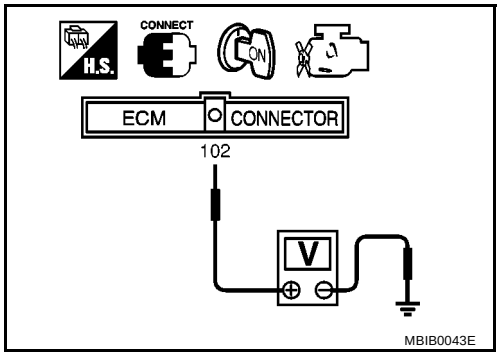

Wiring Diagram

BBS003AG

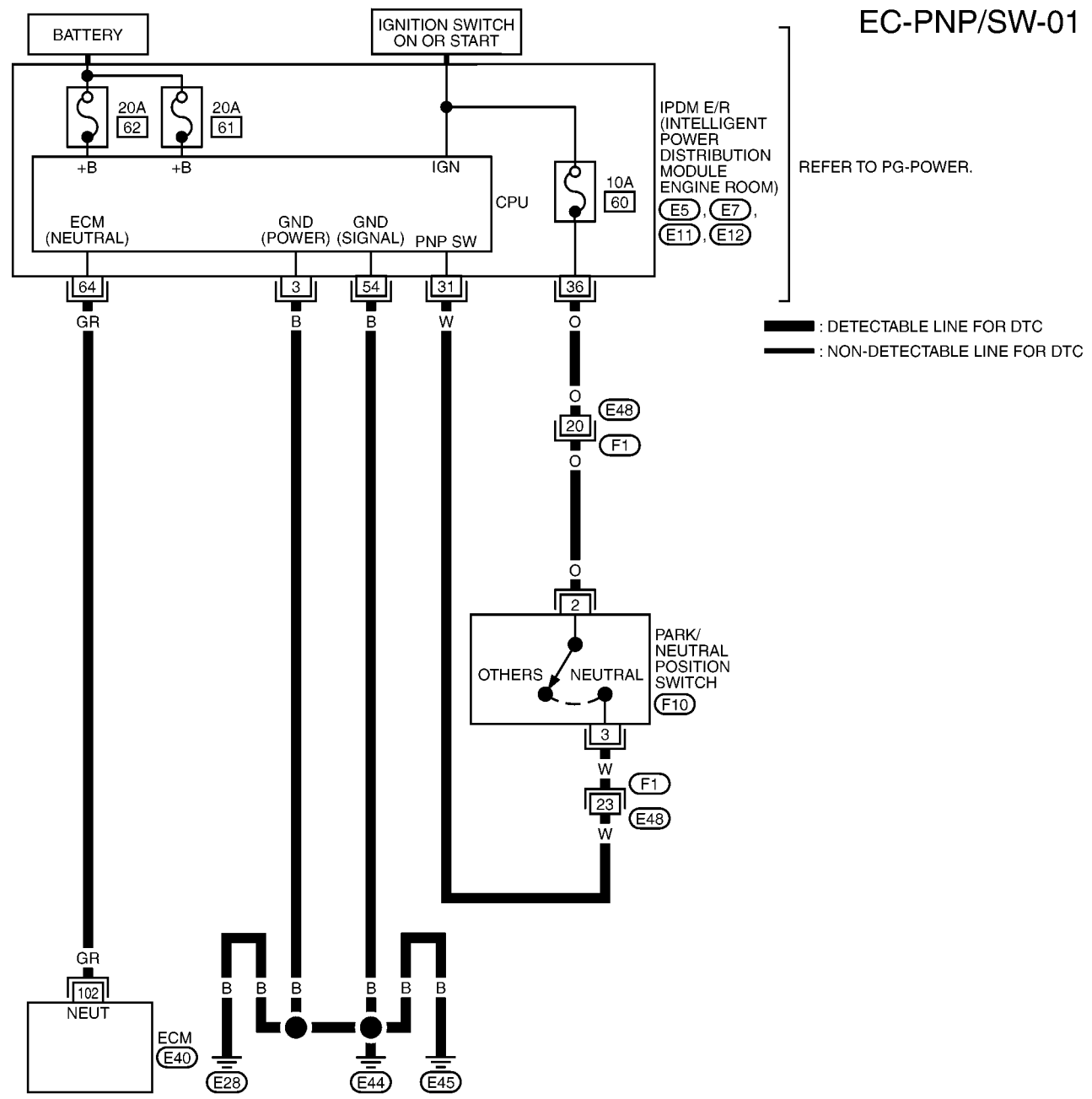

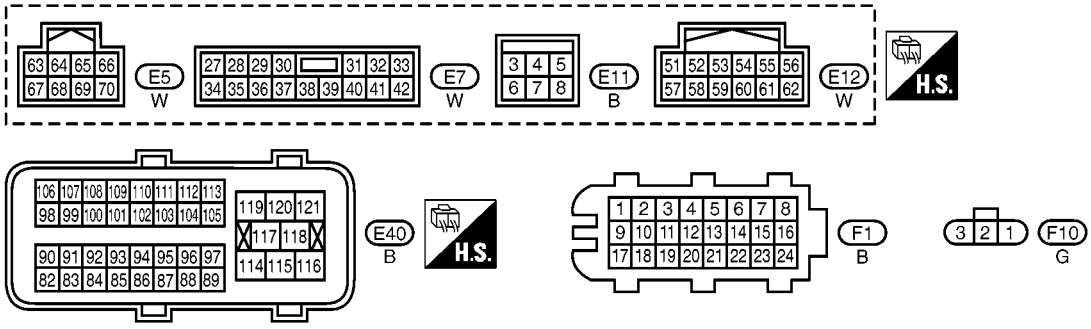

MBWA1527E

Specification data are reference values and are measured between each terminal and ground.

CAUTION:

Do not use ECM ground terminals when measuring input/output voltage. Doing so may result in damage to the ECM's transistor. Use a ground other than ECM terminals, such as the ground.

TERMINAL NO.	WIRE COLOR	ITEM	CONDITION	DATA (DC Voltage)
102	GR	PNP switch	**[Ignition switch: ON]** ● Shift lever position: Neutral	Approximately 0V
			[Ignition switch: ON] ● Except the above gear position	BATTERY VOLTAGE (11 - 14V)

Diagnostic Procedure

BBS003AH

1. CHECK PNP SWITCH CIRCUIT

1. Turn ignition switch ON.
2. Check voltage between IPDM E/R terminal 31 and ground under following condition.

Shift lever position	Voltage
Neutral	Battery voltage (11- 14V)
Except above position	Approximately 0V

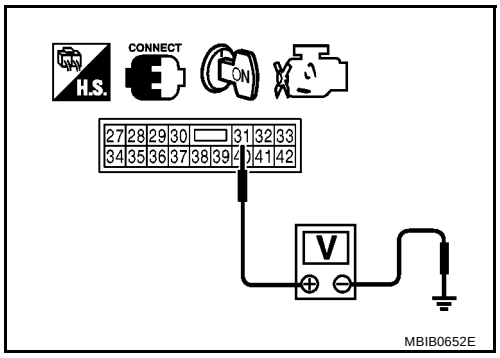

OK or NG

OK >> GO TO 8.
NG >> GO TO 2.

2. CHECK PNP SWITCH POWER SUPPLY CIRCUIT

1. Turn ignition switch OFF.
2. Disconnect PNP switch harness connector.
3. Turn ignition switch ON.
4. Check voltage between PNP switch terminal 2 and ground with CONSULT-II or tester.

Voltage: Battery voltage

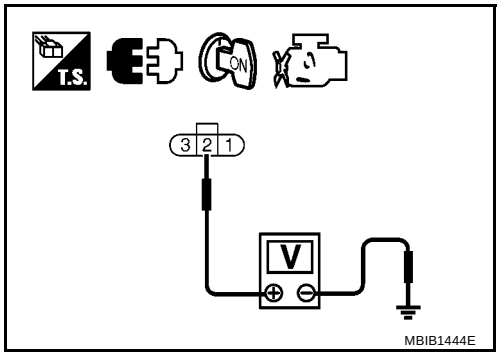

OK or NG

OK >> GO TO 4.
NG >> GO TO 3.

3. DETECT MALFUNCTIONING PARTS

Check the following.

- 10A fuse
- Harness connectors E48, F1
- IPDM E/R connector E7
- Harness for short or open between PNP switch and fuse

>> Repair or replace harness or connectors.

4. CHECK HARNESS CONTINUTY BETWEEN PNP SWITCH AND IPDM E/R

1. Turn ignition switch OFF.
2. Disconnect IPDM E/R harness connector E7.
3. Check harness continuity between IPDM E/R terminal 31 and PNP switch terminal 3.
   Refer to Wiring Diagram.

   Continuity should exist.

4. Also check harness for short to ground and short to power.

OK or NG

OK >> GO TO 6.
NG >> GO TO 5.

5. DETECT MALFUNCTIONING PARTS

Check the following.

- Harness connectors E48, F1
- Harness for short or open between PNP switch and IPDM E/R

>> Repair open circuit or short to ground or short to power in harness or connectors.

6. CHECK PNP SWITCH

Refer to MT-16, "Park/Neutral Position Switch" .

OK or NG

OK >> GO TO 7.
NG >> Replace PNP switch.

7. CHECK INTERMITTENT INCIDENT

Refer to EC-542, "TROUBLE DIAGNOSIS FOR INTERMITTENT INCIDENT" .

>> **INSPECTION END**

8. CHECK PNP SWITCH GROUND CIRCUIT FOR OPEN AND SHORT

1. Turn ignition switch OFF.
2. Disconnect IPDM E/R harness connectors E11 and E12.
3. Check harness continuity between IPDM E/R terminal 3, 54 and ground.
   Refer to Wiring Diagram.

   Continuity should exist.

4. Also check harness for short to power.

OK or NG

OK >> GO TO 9.
NG >> Repair open circuit or short to power in harness or connectors.

9. CHECK PNP SWITCH INPUT SIGNAL CIRCUIT FOR OPEN AND SHORT

1. Disconnect IPDM E/R harness connector E5
2. Disconnect ECM harness connector.
3. Check harness continuity between ECM terminal 102 and IPDM E/R terminal 64.
   Refer to Wiring Diagram.

   Continuity should exist.

4. Also check harness for short to ground and short to power.

OK or NG

OK >> GO TO 10.
NG >> Repair open circuit or short to ground or short to power in harness or connectors.

10. CHECK INTERMITTENT INCIDENT

Refer to EC-542, "TROUBLE DIAGNOSIS FOR INTERMITTENT INCIDENT" .

OK or NG

OK >> Replace IPDM E/R. Refer to PG-18, "IPDM E/R (INTELLIGENT POWER DISTRIBUTION MODULE ENGINE ROOM)" .
NG >> Repair or replace.

DTC P1805 BRAKE SWITCH

PFP:25320

Description

BBS003AI

Brake switch signal is applied to the ECM through the stop lamp switch when the brake pedal is depressed. This signal is used mainly to decrease the engine speed when the vehicle is driving.

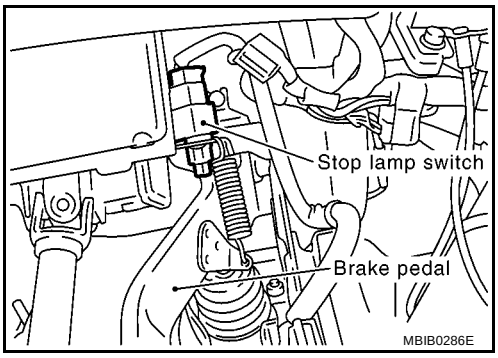

CONSULT-II Reference Value in Data Monitor Mode

BBS003AJ

Specification data are reference values.

MONITOR ITEM	CONDITION		SPECIFICATION
BRAKE SW	● Ignition switch: ON	Brake pedal: Fully released	OFF
		Brake pedal: Slightly depressed	ON

On Board Diagnosis Logic

BBS003AK

This self-diagnosis has the one trip detection logic.

DTC No.	Trouble diagnosis name	DTC detecting condition	Possible cause
P1805 1805	Brake switch	A brake switch signal is not sent to ECM for extremely long time while the vehicle is driving.	● Harness or connectors (Stop lamp switch circuit is open or shorted.) ● Stop lamp switch

FAIL-SAFE MODE

When the malfunction is detected, the ECM enters fail-safe mode and the MI light up.

Engine operating condition in fail-safe mode	
ECM controls the electric throttle control actuator by regulating the throttle opening to a small range. Therefore, acceleration will be poor.	
Vehicle condition	Driving condition
When engine is idling	Normal
When accelerating	Poor acceleration

DTC Confirmation Procedure

BBS003AM

WITH CONSULT-II

1. Turn ignition switch ON.
2. Fully depress the brake pedal for at least 5 seconds.
3. Erase the DTC with CONSULT-II.
4. Select “DATA MONITOR” mode with CONSULT-II.
5. If DTC is detected, go to EC-696, "Diagnostic Procedure" .

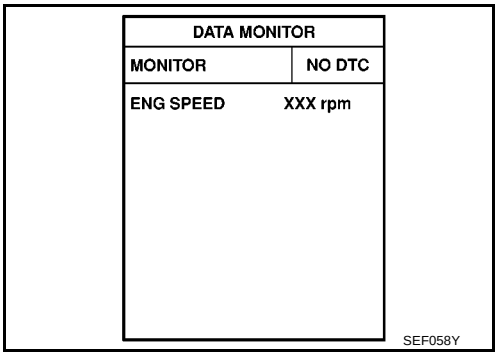

WITHOUT CONSULT-II

1. Turn ignition switch ON.
2. Fully depress the brake pedal at least 5 seconds.
3. Erase the Diagnostic Test Mode II (Self-diagnostic results) memory. Refer to EC-478 .
4. Turn ignition switch OFF, wait at least 10 seconds and then turn ON.
5. Perform Diagnostic Test Mode II (Self-diagnostic results) with ECM.
6. If DTC is detected, go to EC-696, "Diagnostic Procedure" .

Wiring Diagram

BBS003AN

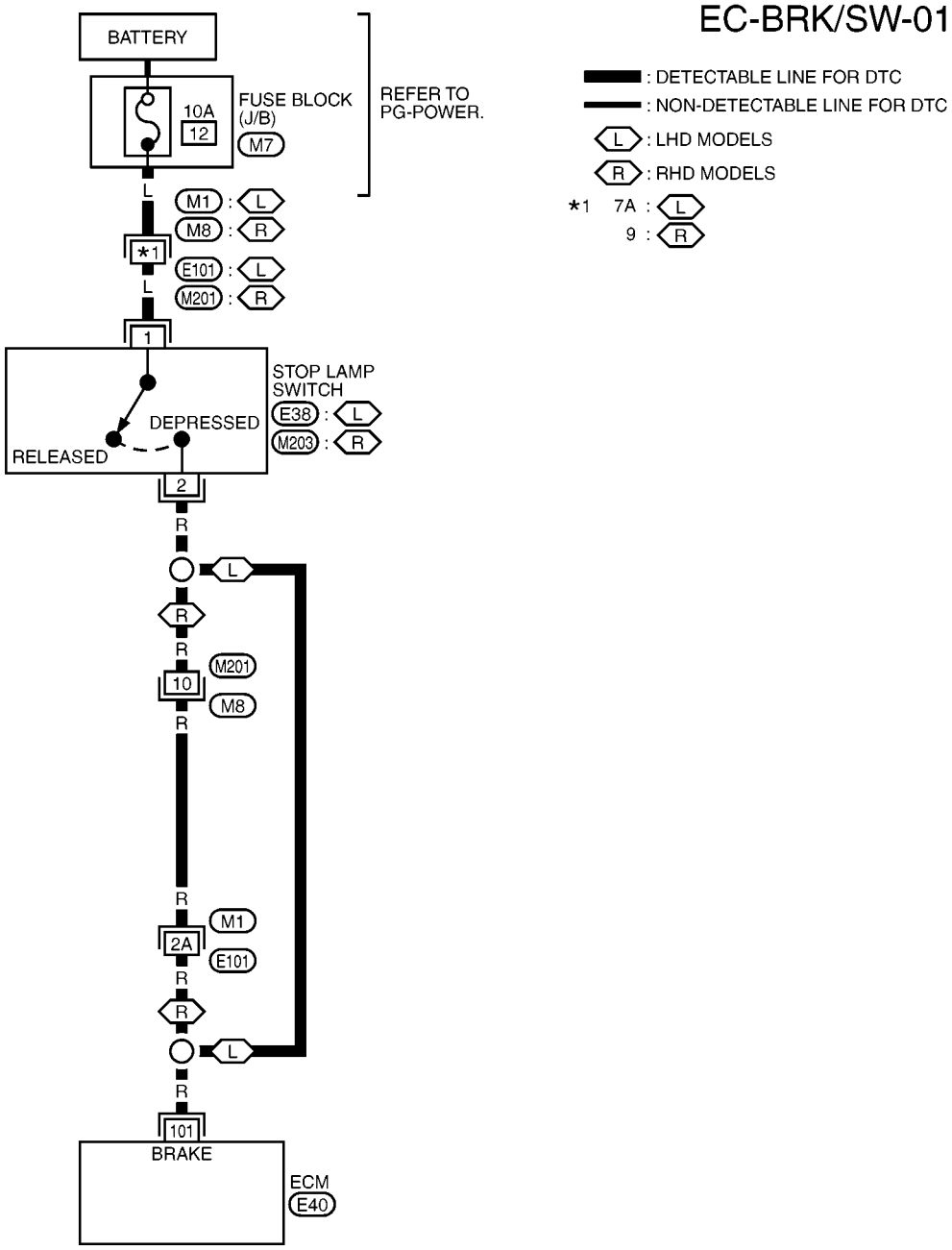

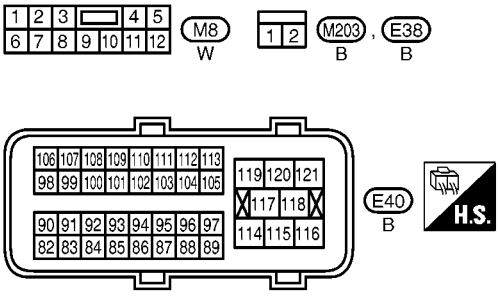

REFER TO THE FOLLOWING.
M1 - SUPER MULTIPLE JUNCTION (SMJ)
M7 - FUSE BLOCK - JUNCTION BOX (J/B)

MBWA1528E

Specification data are reference values and are measured between each terminal and ground.

CAUTION:

Do not use ECM ground terminals when measuring input/output voltage. Doing so may result in damage to the ECM's transistor. Use a ground other than ECM terminals, such as the ground.

TERMINAL NO.	WIRE COLOR	ITEM	CONDITION	DATA (DC Voltage)
101	R	Stop lamp switch	**[Ignition switch: OFF]** ● Brake pedal: Fully released	Approximately 0V
			[Ignition switch: OFF] ● Brake pedal: Slightly depressed	BATTERY VOLTAGE (11 - 14V)

Diagnostic Procedure

BBS003AO

1. CHECK STOP LAMP SWITCH CIRCUIT

1. Turn ignition switch OFF.
2. Check the stop lamp when depressing and releasing the brake pedal.

Brake pedal	Stop lamp
Fully released	Not illuminated
Slightly depressed	Illuminated

OK or NG

OK >> GO TO 4.
NG >> GO TO 2.

2. CHECK STOP LAMP SWITCH POWER SUPPLY CIRCUIT

1. Disconnect stop lamp switch harness connector.

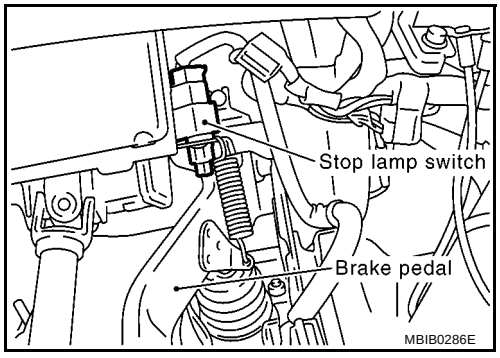

2. Check voltage between stop lamp switch terminal 1 and ground with CONSULT-II or tester.

Voltage: Battery voltage

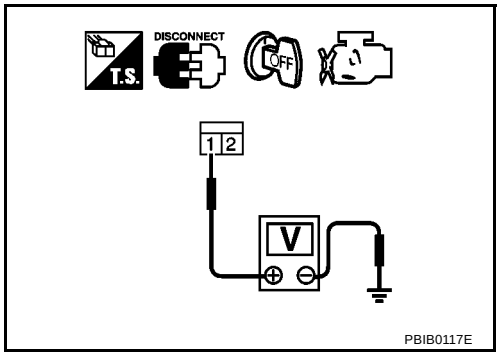

OK or NG

OK >> GO TO 4.
NG >> GO TO 3.

3. DETECT MALFUNCTIONING PART

Check the following.

- 10A fuse
- Fuse block (J/B) connector M7
- Harness connectors M1, E101 (LHD models)
- Harness connectors M8, M201 (RHD models)
- Harness for open and short between stop lamp switch and battery

>> Repair open circuit or short to ground or short to power in harness or connectors.

4. CHECK STOP LAMP SWITCH INPUT SIGNAL CIRCUIT FOR OPEN AND SHORT

1. Disconnect ECM harness connector.
2. Disconnect stop lamp switch harness connector.
3. Check harness continuity between ECM terminal 101 and stop lamp switch terminal 2.
   Refer to Wiring Diagram.

   Continuity should exist.

4. Also check harness for short to ground and short to power.

OK or NG

OK >> GO TO 6.
NG (LHD models)>>Repair open circuit or short to ground or short to power in harness or connectors.
NG (RHD models)>>GO TO 5.

5. DETECT MALFUNCTIONING PART

Check the following.

- Harness connectors M8, M201
- Harness connectors M1, E101
- Harness for open or short between ECM and stop lamp switch

>> Repair open circuit or short to ground or short to power in harness or connectors.

6. CHECK STOP LAMP SWITCH

Refer to EC-698, "Component Inspection" .

OK or NG

OK >> GO TO 7.
NG >> Replace stop lamp switch.

7. CHECK INTERMITTENT INCIDENT

Refer to EC-542, "TROUBLE DIAGNOSIS FOR INTERMITTENT INCIDENT" .

>> **INSPECTION END**

Component Inspection

BBS003AP

STOP LAMP SWITCH

1. Disconnect stop lamp switch harness connector.

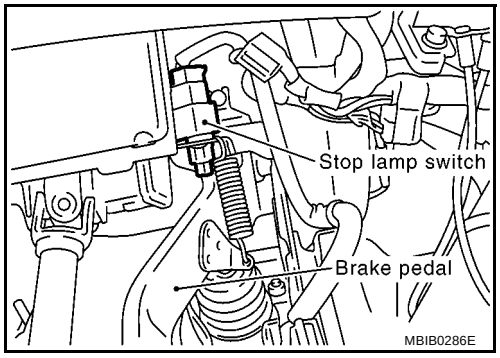

2. Check continuity between stop lamp switch terminals 1 and 2 under the following conditions.

Conditions	Continuity
Brake pedal: Fully released	Should not exist.
Brake pedal: Slightly depressed	Should exist.

If NG, adjust brake pedal installation, refer to BR-6, "BRAKE PEDAL" , and perform step 2 again.

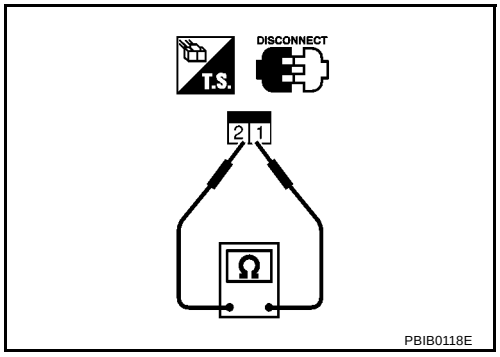

DTC P2122, P2123 APP SENSOR

PFP:18002

Component Description

BBS003AQ

The accelerator pedal position sensor is installed on the upper end of the accelerator pedal assembly. The sensor detects the accelerator position and sends a signal to the ECM.
Accelerator pedal position sensor has two sensors. These sensors are a kind of potentiometers which transform the accelerator pedal position into output voltage, and emit the voltage signal to the ECM. In addition, these sensors detect the opening and closing speed of the accelerator pedal and feed the voltage signals to the ECM. The ECM judges the current opening angle of the accelerator pedal from these signals and controls the throttle control motor based on these signals.

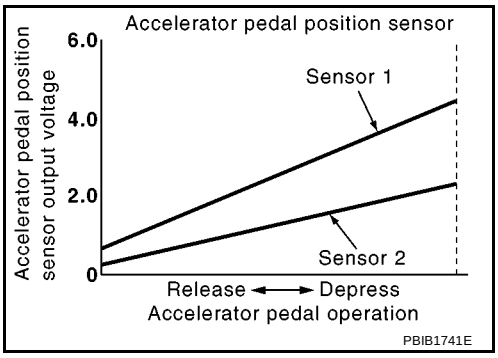

Idle position of the accelerator pedal is determined by the ECM receiving the signal from the accelerator pedal position sensor. The ECM uses this signal for the engine operation such as fuel cut.

CONSULT-II Reference Value in Data Monitor Mode

BBS003AR

Specification data are reference values.

MONITOR ITEM	CONDITION		SPECIFICATION
ACCEL SEN 1	● Ignition switch: ON (Engine stopped)	Accelerator pedal: Fully released	0.6 - 0.9V
		Accelerator pedal: Fully depressed	4.0 - 4.8V
ACCEL SEN 2*	● Ignition switch: ON (Engine stopped)	Accelerator pedal: Fully released	0.6 - 0.9V
		Accelerator pedal: Fully depressed	3.9 - 4.8V
CLSD THL POS	● Ignition switch: ON (Engine stopped)	Accelerator pedal: Fully released	ON
		Accelerator pedal: Slightly depressed	OFF

*: Accelerator pedal position sensor 2 signal is converted by ECM internally. Thus, it differs from ECM terminal voltage.

On Board Diagnosis Logic

BBS003AS

These self-diagnoses have the one trip detection logic.

NOTE:
If DTC P2122 or P2123 is displayed with DTC P1229, first perform the trouble diagnosis for DTC P1229. Refer to EC-680, "DTC P1229 SENSOR POWER SUPPLY" .

DTC No.	Trouble diagnosis name	DTC detecting condition	Possible cause
P2122 2122	Accelerator pedal position sensor 1 circuit low input	An excessively low voltage from the APP sensor 1 is sent to ECM.	● Harness or connectors (APP sensor 1 circuit is open or shorted.) ● Accelerator pedal position sensor (APP sensor 1)
P2123 2123	Accelerator pedal position sensor 1 circuit high input	An excessively high voltage from the APP sensor 1 is sent to ECM.	

FAIL-SAFE MODE

When the malfunction is detected, the ECM enters fail-safe mode and the MI lights up.

Engine operating condition in fail-safe mode
The ECM controls the electric throttle control actuator in regulating the throttle opening in order for the idle position to be within +10 degrees. The ECM regulates the opening speed of the throttle valve to be slower than the normal condition. So, the acceleration will be poor.

DTC Confirmation Procedure

BBS003AT

NOTE:
If DTC Confirmation Procedure has been previously conducted, always turn ignition switch OFF and wait at least 10 seconds before conducting the next test.
TESTING CONDITION:

Before performing the following procedure, confirm that battery voltage is more than 10V at idle.

WITH CONSULT-II

1. Turn ignition switch ON.
2. Select “DATA MONITOR” mode with CONSULT-II.
3. Start engine and let it idle for 1 second.
4. If DTC is detected, go to EC-704, "Diagnostic Procedure" .

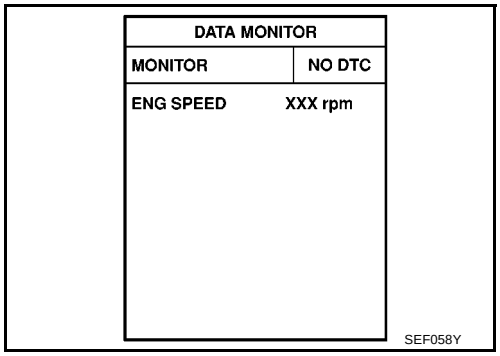

WITHOUT CONSULT-II

1. Start engine and let it idle for 1 second.
2. Turn ignition switch OFF, wait at least 10 seconds and then turn ON.
3. Perform Diagnostic Test Mode II (Self-diagnostic results) with ECM.
4. If DTC is detected, go to EC-704, "Diagnostic Procedure" .

Wiring Diagram
LHD MODELS

BBS003AU

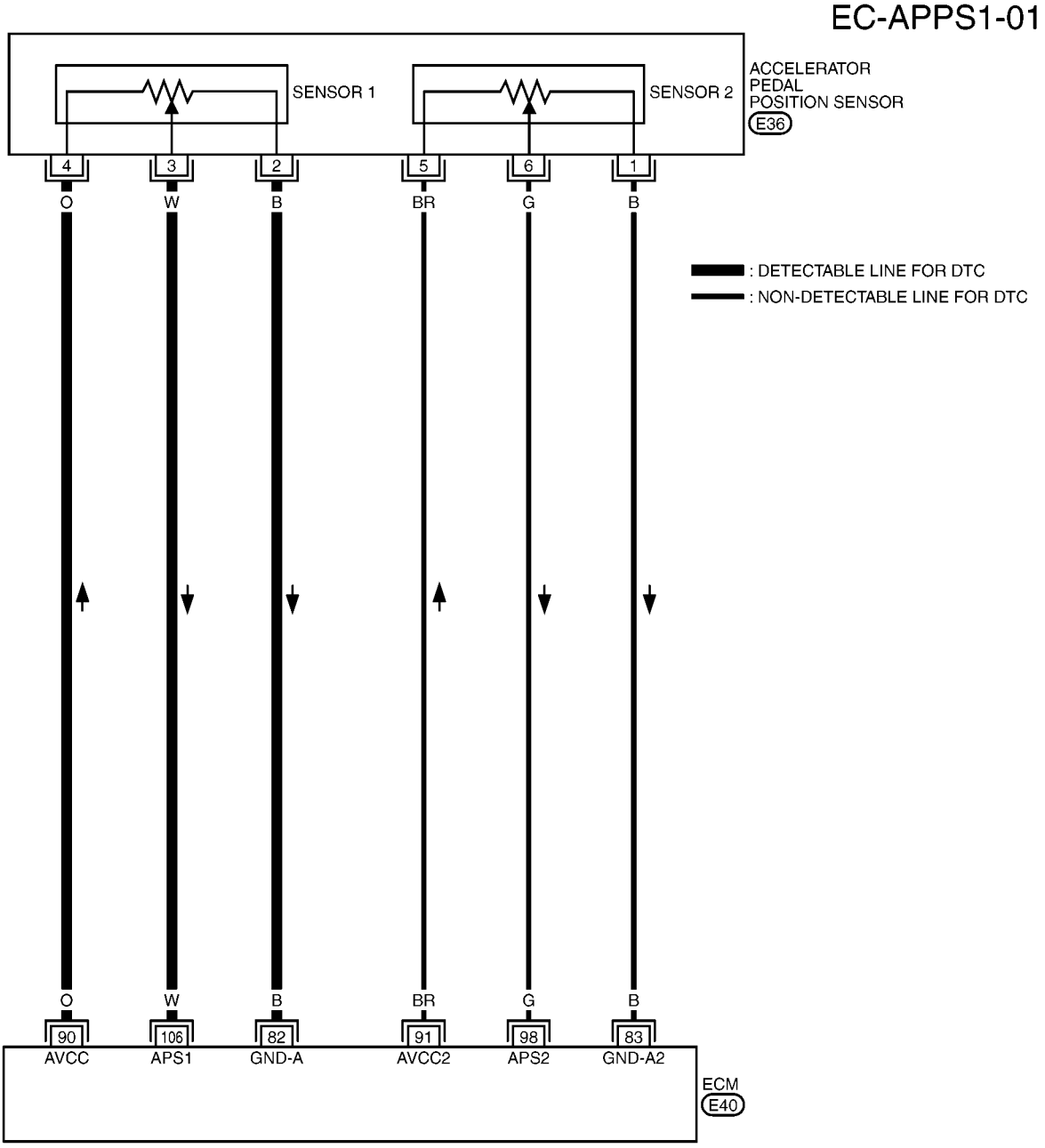

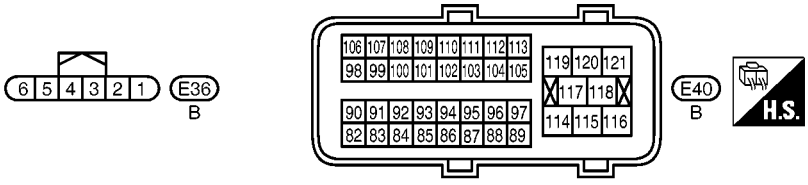

MBWA1529E

Specification data are reference values and are measured between each terminal and ground.

CAUTION:

Do not use ECM ground terminals when measuring input/output voltage. Doing so may result in damage to the ECM's transistor. Use a ground other than ECM terminals, such as the ground.

TERMINAL NO.	WIRE COLOR	ITEM	CONDITION	DATA (DC Voltage)
82	B	Sensor ground (APP sensor 1)	**[Engine is running]** ● **Warm-up condition** ● Idle speed	Approximately 0V
83	B	Sensor ground (APP sensor 2)	**[Ignition switch: ON]** ● **Warm-up condition** ● Idle speed	Approximately 0V
90	O	Sensor power supply (APP sensor 1)	**[Ignition switch: ON]**	Approximately 5V
91	BR	Sensor power supply (APP sensor 2)	**[Ignition switch: ON]**	Approximately 5V
98	G	Accelerator pedal position sensor 2	**[Ignition switch: ON]** ● **Engine stopped** ● Accelerator pedal: Fully released	0.3 - 0.6V
			[Ignition switch: ON] ● **Engine stopped** ● Accelerator pedal: Fully depressed	1.95 - 2.4V
106	W	Accelerator pedal position sensor 1	**[Ignition switch: ON]** ● **Engine stopped** ● Accelerator pedal: Fully released	0.6 - 0.9V
			[Ignition switch: ON] ● **Engine stopped** ● Accelerator pedal: Fully depressed	3.9 - 4.7V

RHD MODELS

EC-APPS1-02

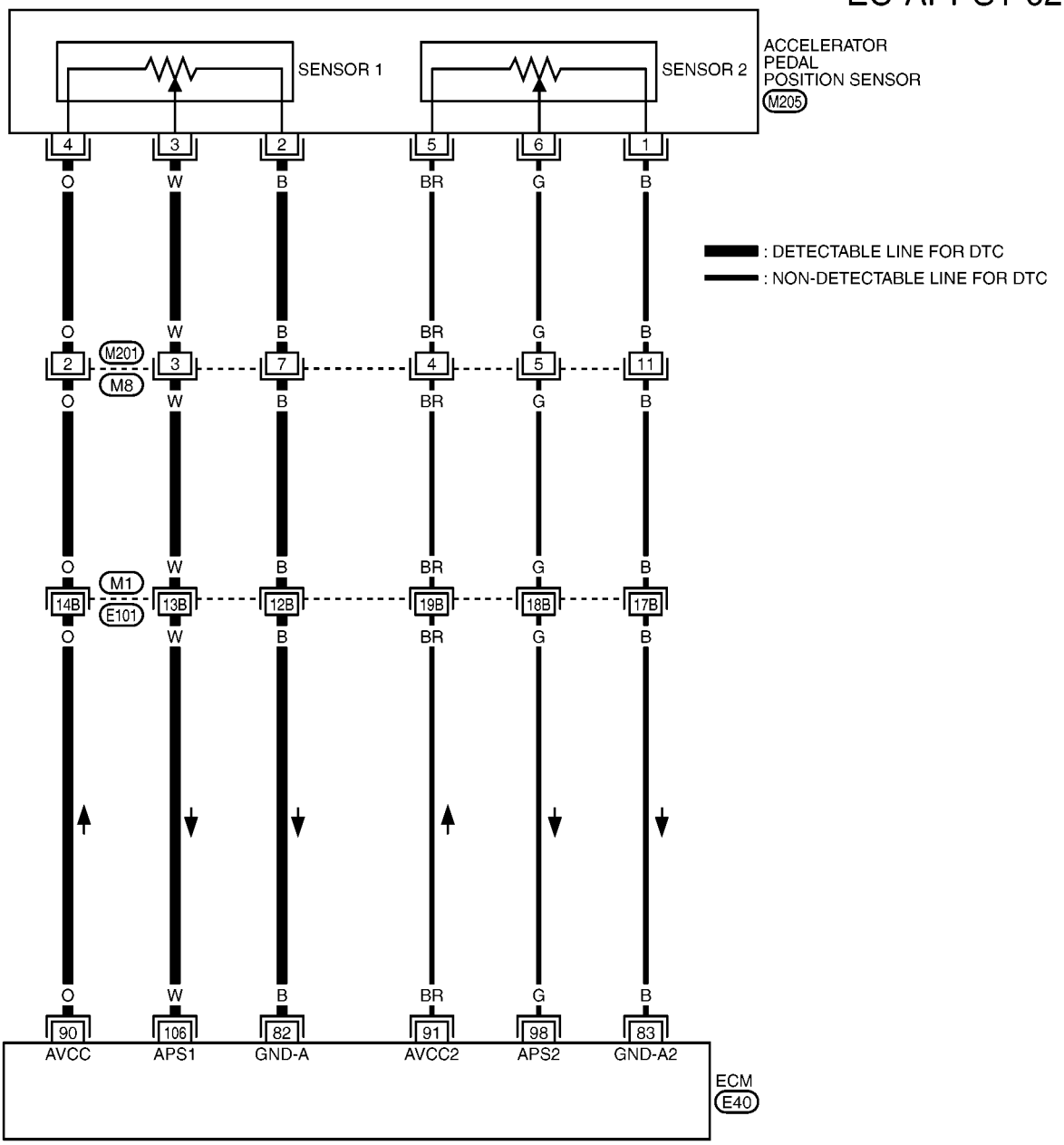

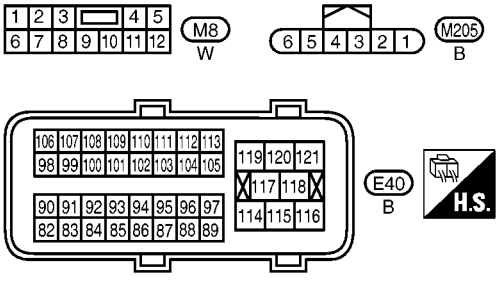

REFER TO THE FOLLOWING.
M1 - SUPER MULTIPLE JUNCTION (SMJ)

MBWA1530E

Specification data are reference values and are measured between each terminal and ground.

CAUTION:

Do not use ECM ground terminals when measuring input/output voltage. Doing so may result in damage to the ECM's transistor. Use a ground other than ECM terminals, such as the ground.

TERMINAL NO.	WIRE COLOR	ITEM	CONDITION	DATA (DC Voltage)
82	B	Sensor ground (APP sensor 1)	**[Engine is running]** ● **Warm-up condition** ● Idle speed	Approximately 0V
83	B	Sensor ground (APP sensor 2)	**[Ignition switch: ON]** ● **Warm-up condition** ● Idle speed	Approximately 0V
90	O	Sensor power supply (APP sensor 1)	**[Ignition switch: ON]**	Approximately 5V
91	BR	Sensor power supply (APP sensor 2)	**[Ignition switch: ON]**	Approximately 5V
98	G	Accelerator pedal position sensor 2	**[Ignition switch: ON]** ● **Engine stopped** ● Accelerator pedal: Fully released	0.3 - 0.6V
			[Ignition switch: ON] ● **Engine stopped** ● Accelerator pedal: Fully depressed	1.95 - 2.4V
106	W	Accelerator pedal position sensor 1	**[Ignition switch: ON]** ● **Engine stopped** ● Accelerator pedal: Fully released	0.6 - 0.9V
			[Ignition switch: ON] ● **Engine stopped** ● Accelerator pedal: Fully depressed	3.9 - 4.7V

Diagnostic Procedure

BBS003AV

1. CHECK GROUND CONNECTIONS

1. Turn ignition switch OFF.
2. Loosen and retighten ground screws on the body.
   Refer to EC-548, "Ground Inspection" .

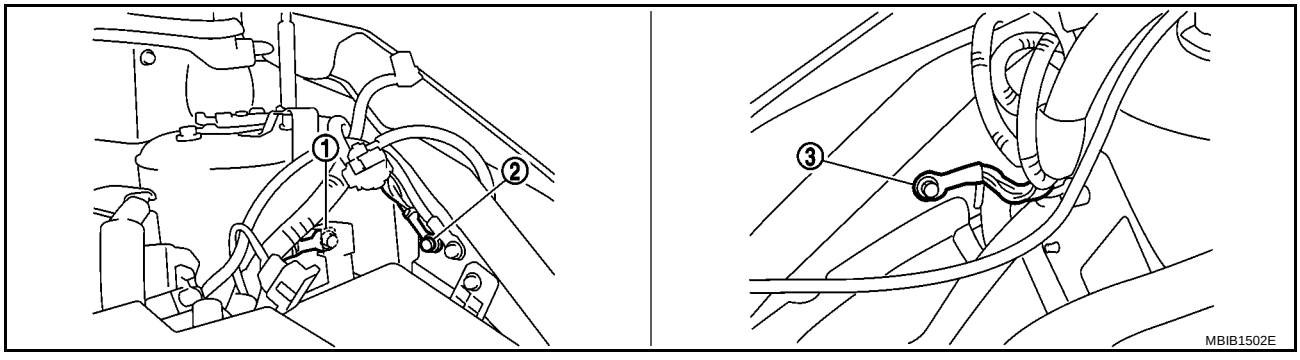

1. Body ground E44
2. Body ground E45
3. Body ground E28

OK or NG

OK >> GO TO 2.
NG >> Repair or replace ground connections.

2. CHECK APP SENSOR 1 POWER SUPPLY CIRCUIT

1. Disconnect accelerator pedal position (APP) sensor harness connector.
2. Turn ignition switch ON.

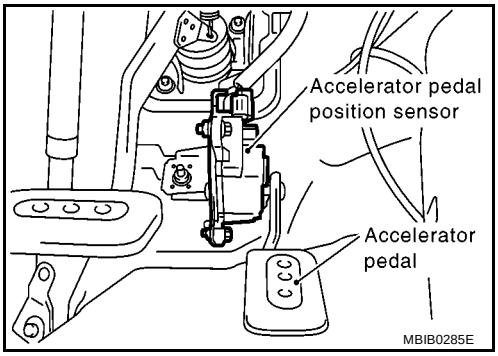

3. Check voltage between APP sensor terminal 4 and ground with CONSULT-II or tester.

Voltage: Approximately 5V

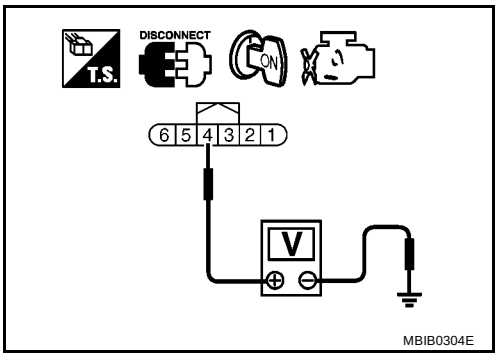

OK or NG

OK >> GO TO 4.
NG (LHD models)>>Repair open circuit or short to ground or short to power in harness or connectors.
NG (RHD models)>>GO TO 3.

3. DETECT MALFUNCTIONING PART

Check the following.

- Harness connectors M1, E101
- Harness connectors M8, M201
- Harness for open or short between ECM and accelerator pedal position sensor

>> Repair open circuit or short to ground or short to power in harness or connectors.

4. CHECK APP SENSOR 1 GROUND CIRCUIT FOR OPEN AND SHORT

1. Turn ignition switch OFF.
2. Disconnect ECM harness connector.
3. Check harness continuity between ECM terminal 82 and APP sensor terminal 2.
   Refer to Wiring Diagram.

Continuity should exist.

4. Also check harness for short to ground and short to power.

OK or NG

OK >> GO TO 6.
NG (LHD models)>>Repair open circuit or short to ground or short to power in harness or connectors.
NG (RHD models)>>GO TO 5.

5. DETECT MALFUNCTIONING PART

Check the following.

- Harness connectors M1, E101
- Harness connectors M8, M201
- Harness for open or short between ECM and accelerator pedal position sensor

>> Repair open circuit or short to ground or short to power in harness or connectors.

6. CHECK APP SENSOR 1 INPUT SIGNAL CIRCUIT FOR OPEN AND SHORT

1. Check harness continuity between ECM terminal 106 and APP sensor terminal 3.
   Refer to Wiring Diagram.

   Continuity should exist.

2. Also check harness for short to ground and short to power.

OK or NG

OK >> GO TO 8.
NG (LHD models)>>Repair open circuit or short to ground or short to power in harness or connectors.
NG (RHD models)>>GO TO 7.

7. DETECT MALFUNCTIONING PART

Check the following.

- Harness connectors M1, E101
- Harness connectors M8, M201
- Harness for open or short between ECM and accelerator pedal position sensor

>> Repair open circuit or short to ground or short to power in harness or connectors.

8. CHECK APP SENSOR

Refer to EC-706, "Component Inspection" .

OK or NG

OK >> GO TO 10.
NG >> GO TO 9.

9. REPLACE ACCELERATOR PEDAL ASSEMBLY

1. Replace the accelerator pedal assembly.
2. Perform EC-486, "Accelerator Pedal Released Position Learning" .
3. Perform EC-486, "Throttle Valve Closed Position Learning" .
4. Perform EC-486, "Idle Air Volume Learning" .

>> **INSPECTION END**

10. CHECK INTERMITTENT INCIDENT

Refer to EC-542, "TROUBLE DIAGNOSIS FOR INTERMITTENT INCIDENT" .

>> **INSPECTION END**

Component Inspection

BBS003AW

ACCELERATOR PEDAL POSITION SENSOR

1. Reconnect all harness connectors disconnected.
2. Turn ignition switch ON.

3. Check voltage between ECM terminals 106 (APP sensor 1 signal), 98 (APP sensor 2 signal) and ground under the following conditions.

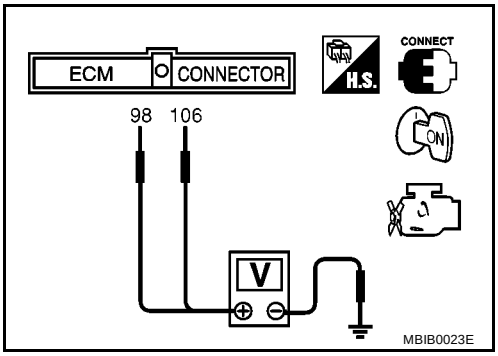

Terminal	Accelerator pedal	Voltage
106 (Accelerator pedal position sensor 1)	Fully released	0.6 - 0.9V
	Fully depressed	3.9 - 4.7V
98 (Accelerator pedal position sensor 2)	Fully released	0.3 - 0.6V
	Fully depressed	1.95 - 2.4V

4. If NG, replace accelerator pedal assembly and go to the next step.
5. Perform EC-486, "Accelerator Pedal Released Position Learning" .
6. Perform EC-486, "Throttle Valve Closed Position Learning" .
7. Perform EC-486, "Idle Air Volume Learning" .

Removal and Installation

BBS003AX

ACCELERATOR PEDAL

Refer to ACC-2, "ACCELERATOR CONTROL SYSTEM" .

DTC P2127, P2128 APP SENSOR

PFP:18002

Component Description

BBS003AY

The accelerator pedal position sensor is installed on the upper end of the accelerator pedal assembly. The sensor detects the accelerator position and sends a signal to the ECM.
Accelerator pedal position sensor has two sensors. These sensors are a kind of potentiometers which transform the accelerator pedal position into output voltage, and emit the voltage signal to the ECM. In addition, these sensors detect the opening and closing speed of the accelerator pedal and feed the voltage signals to the ECM. The ECM judges the current opening angle of the accelerator pedal from these signals and controls the throttle control motor based on these signals.

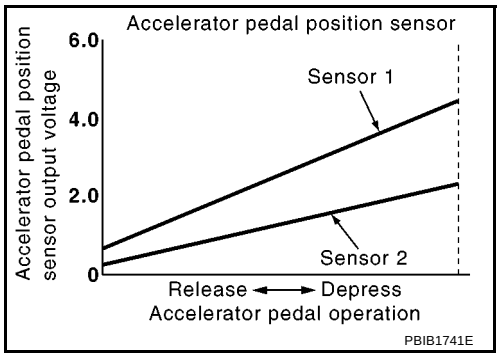

Idle position of the accelerator pedal is determined by the ECM receiving the signal from the accelerator pedal position sensor. The ECM uses this signal for the engine operation such as fuel cut.

CONSULT-II Reference Value in Data Monitor Mode

BBS003AZ

Specification data are reference values.

MONITOR ITEM	CONDITION		SPECIFICATION
ACCEL SEN 1	● Ignition switch: ON (Engine stopped)	Accelerator pedal: Fully released	0.6 - 0.9V
		Accelerator pedal: Fully depressed	4.0 - 4.8V
ACCEL SEN 2*	● Ignition switch: ON (Engine stopped)	Accelerator pedal: Fully released	0.6 - 0.9V
		Accelerator pedal: Fully depressed	3.9 - 4.8V
CLSD THL POS	● Ignition switch: ON (Engine stopped)	Accelerator pedal: Fully released	ON
		Accelerator pedal: Slightly depressed	OFF

*: Accelerator pedal position sensor 2 signal is converted by ECM internally. Thus, it differ from ECM terminal voltage signal.

On Board Diagnosis Logic

BBS003B0

These self-diagnoses have the one trip detection logic.

DTC No.	Trouble diagnosis name	DTC detecting condition	Possible cause
P2127 2127	Accelerator pedal position sensor 2 circuit low input	An excessively low voltage from the APP sensor 2 is sent to ECM.	● Harness or connectors (APP sensor 2 circuit is open or shorted.) (TP sensor circuit is shorted.) ● Accelerator pedal position sensor (APP sensor 2) ● Electric throttle control actuator (TP sensor 1 and 2)
P2128 2128	Accelerator pedal position sensor 2 circuit high input	An excessively high voltage from the APP sensor 2 is sent to ECM.	

FAIL-SAFE MODE

When the malfunction is detected, the ECM enters fail-safe mode and the MI lights up.

Engine operating condition in fail-safe mode
The ECM controls the electric throttle control actuator in regulating the throttle opening in order for the idle position to be within +10 degrees. The ECM regulates the opening speed of throttle valve to be slower than the normal condition. So, the acceleration will be poor.

DTC Confirmation Procedure

BBS003B1

NOTE:
If DTC Confirmation Procedure has been previously conducted, always turn ignition switch OFF and wait at least 10 seconds before conducting the next test.
TESTING CONDITION:
Before performing the following procedure, confirm that battery voltage is more than 10V at idle.

WITH CONSULT-II

1. Turn ignition switch ON.
2. Select “DATA MONITOR” mode with CONSULT-II.
3. Start engine and let it idle for 1 second.
4. If DTC is detected, go to EC-713, "Diagnostic Procedure" .

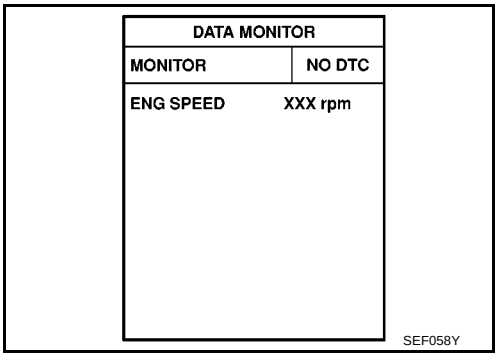

WITHOUT CONSULT-II

1. Start engine and let it idle for 1 seconds.
2. Turn ignition switch OFF, wait at least 10 seconds and then turn ON.
3. Perform Diagnostic Test Mode II (Self-diagnostic results) with ECM.
4. If DTC is detected, go to EC-713, "Diagnostic Procedure" .

Wiring Diagram
LHD MODELS

BBS003B2

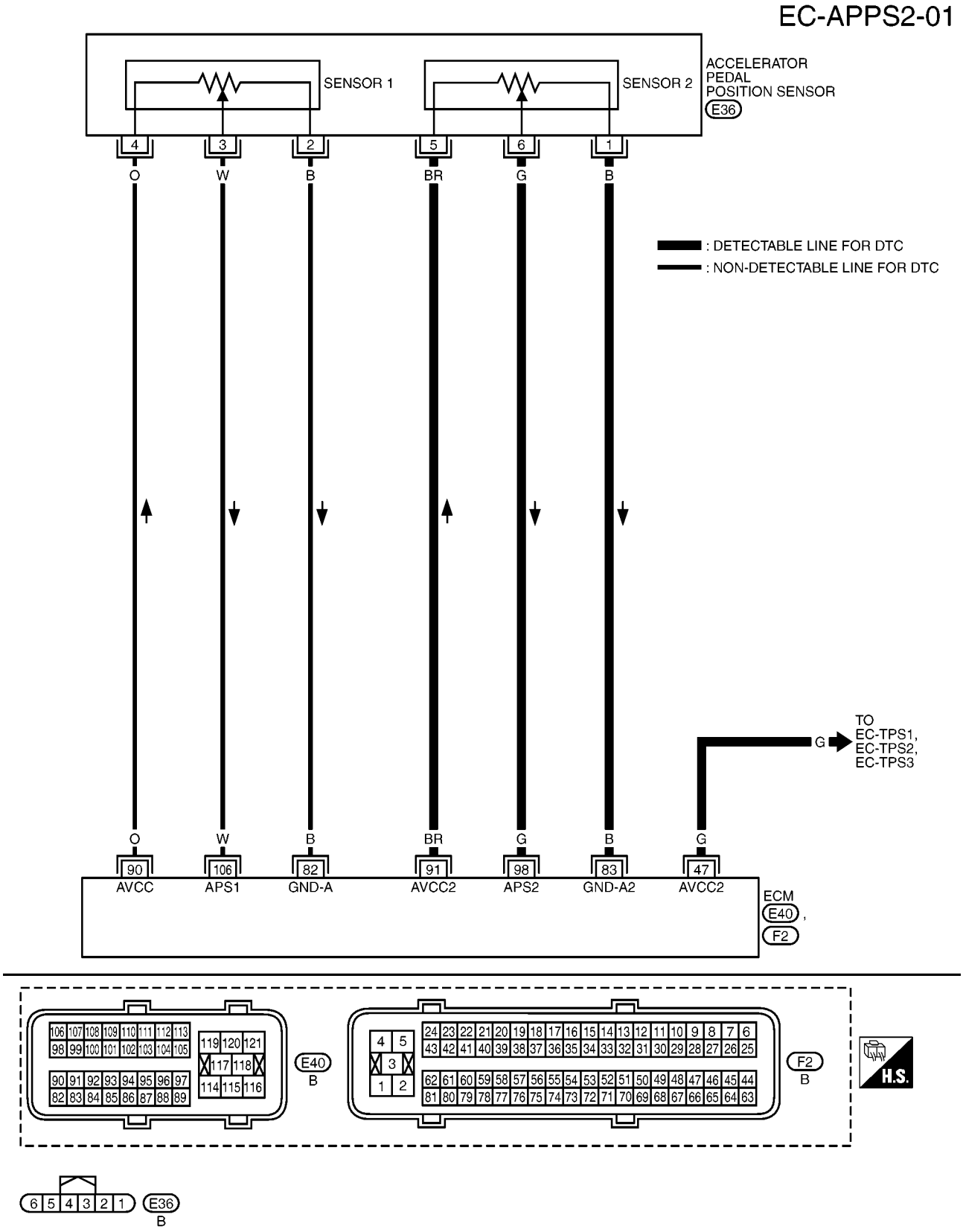

MBWA1531E

Specification data are reference values and are measured between each terminal and ground.

CAUTION:

Do not use ECM ground terminals when measuring input/output voltage. Doing so may result in damage to the ECM's transistor. Use a ground other than ECM terminals, such as the ground.

TERMINAL NO.	WIRE COLOR	ITEM	CONDITION	DATA (DC Voltage)
47	G	Sensor power supply (Throttle position sensor)	**[Ignition switch: ON]**	Approximately 5V
82	B	Sensor ground (APP sensor 1)	**[Engine is running]** ● **Warm-up condition** ● Idle speed	Approximately 0V
83	B	Sensor ground (APP sensor 2)	**[Ignition switch: ON]** ● **Warm-up condition** ● Idle speed	Approximately 0V
90	O	Sensor power supply (APP sensor 1)	**[Ignition switch: ON]**	Approximately 5V
91	BR	Sensor power supply (APP sensor 2)	**[Ignition switch: ON]**	Approximately 5V
98	G	Accelerator pedal position sensor 2	**[Ignition switch: ON]** ● **Engine stopped** ● Accelerator pedal: Fully released	0.3 - 0.6V
			[Ignition switch: ON] ● **Engine stopped** ● Accelerator pedal: Fully depressed	1.95 - 2.4V
106	W	Accelerator pedal position sensor 1	**[Ignition switch: ON]** ● **Engine stopped** ● Accelerator pedal: Fully released	0.6 - 0.9V
			[Ignition switch: ON] ● **Engine stopped** ● Accelerator pedal: Fully depressed	3.9 - 4.7V

RHD MODELS

EC-APPS2-02

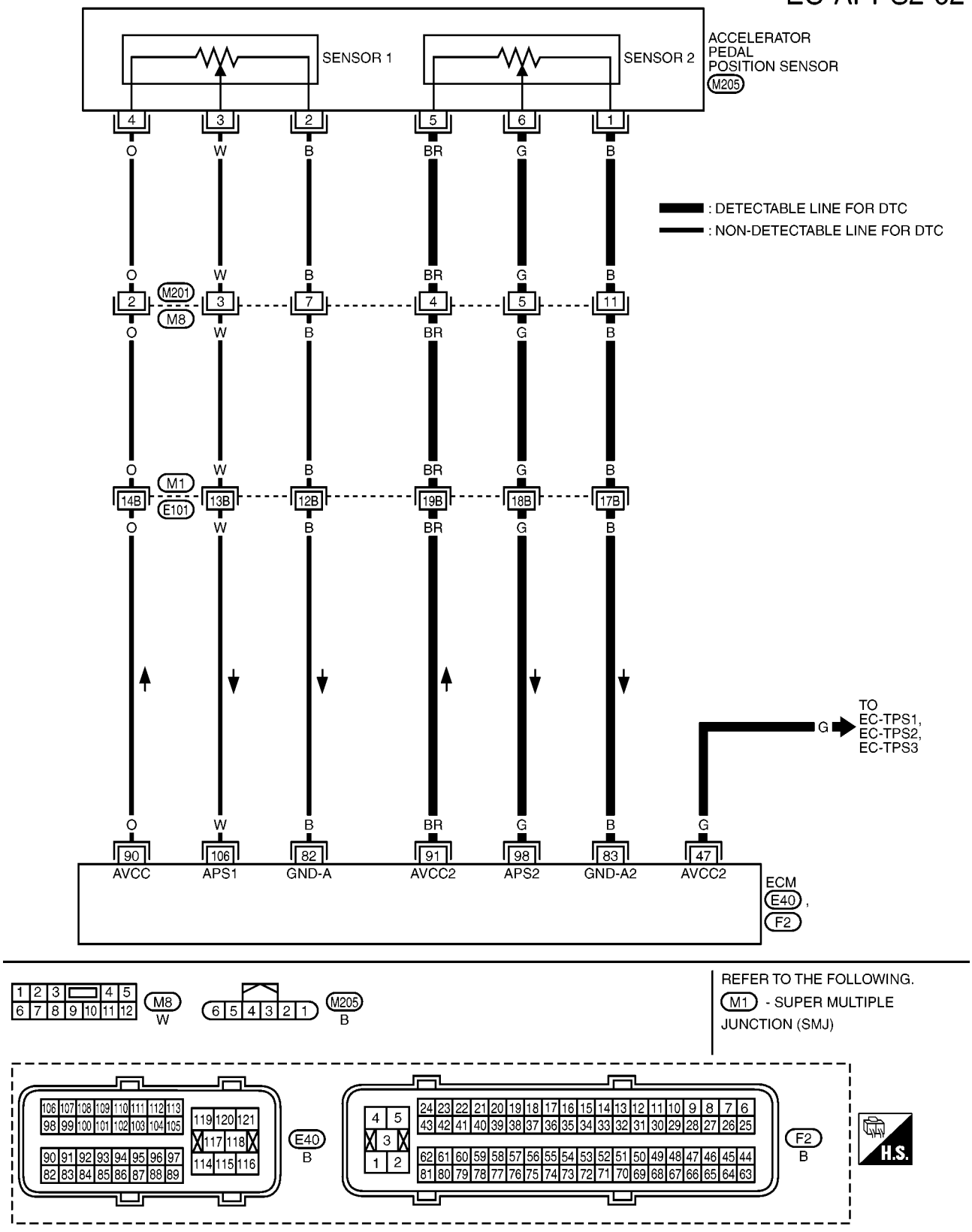

MBWA1532E

Specification data are reference values and are measured between each terminal and ground.

CAUTION:
Do not use ECM ground terminals when measuring input/output voltage. Doing so may result in damage to the ECM's transistor. Use a ground other than ECM terminals, such as the ground.

TERMINAL NO.	WIRE COLOR	ITEM	CONDITION	DATA (DC Voltage)
47	G	Sensor power supply (Throttle position sensor)	**[Ignition switch: ON]**	Approximately 5V
82	B	Sensor ground (APP sensor 1)	**[Engine is running]** ● **Warm-up condition** ● Idle speed	Approximately 0V
83	B	Sensor ground (APP sensor 2)	**[Ignition switch: ON]** ● **Warm-up condition** ● Idle speed	Approximately 0V
90	O	Sensor power supply (APP sensor 1)	**[Ignition switch: ON]**	Approximately 5V
91	BR	Sensor power supply (APP sensor 2)	**[Ignition switch: ON]**	Approximately 5V
98	G	Accelerator pedal position sensor 2	**[Ignition switch: ON]** ● **Engine stopped** ● Accelerator pedal: Fully released	0.3 - 0.6V
			[Ignition switch: ON] ● **Engine stopped** ● Accelerator pedal: Fully depressed	1.95 - 2.4V
106	W	Accelerator pedal position sensor 1	**[Ignition switch: ON]** ● **Engine stopped** ● Accelerator pedal: Fully released	0.6 - 0.9V
			[Ignition switch: ON] ● **Engine stopped** ● Accelerator pedal: Fully depressed	3.9 - 4.7V

Diagnostic Procedure

BBS003B3

1. CHECK GROUND CONNECTIONS

1. Turn ignition switch OFF.
2. Loosen and retighten ground screws on the body.
   Refer to EC-548, "Ground Inspection" .

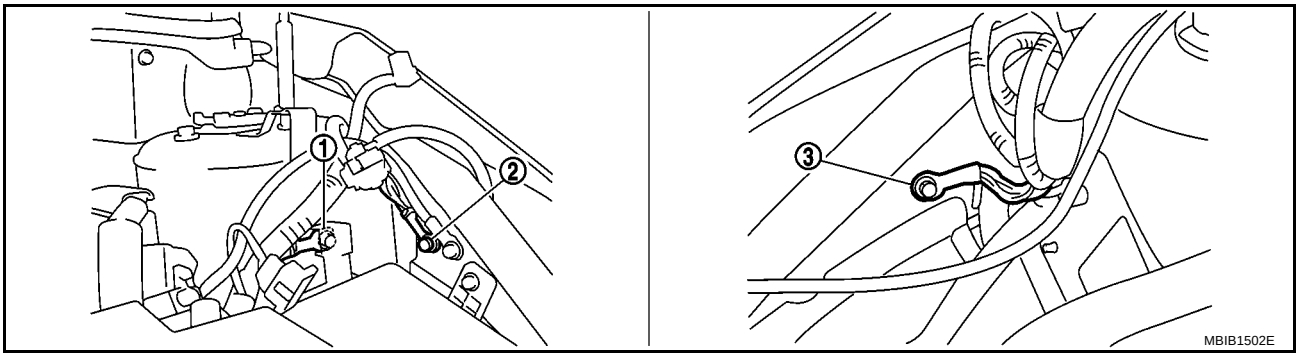

1. Body ground E44
2. Body ground E45
3. Body ground E28

OK or NG

OK >> GO TO 2.
NG >> Repair or replace ground connections.

2. CHECK APP SENSOR 2 POWER SUPPLY CIRCUIT-I

1. Disconnect accelerator pedal position (APP) sensor harness connector.
2. Turn ignition switch ON.

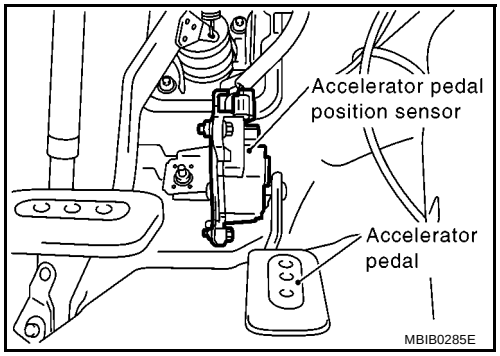

3. Check voltage between APP sensor terminal 5 and ground with CONSULT-II or tester.

Voltage: Approximately 5V

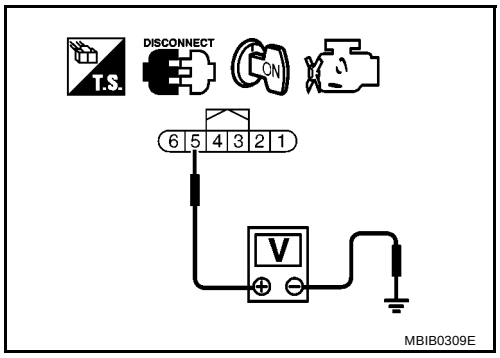

OK or NG

OK >> GO TO 8.
NG >> GO TO 3.

3. CHECK APP SENSOR 2 POWER SUPPLY CIRCUIT-II

1. Turn ignition switch OFF.
2. Disconnect ECM harness connector.
3. Check harness continuity between APP sensor terminal 5 and ECM terminal 91. Refer to Wiring Diagram.

Continuity should exist.

OK or NG

OK >> GO TO 5.
NG (LHD models)>>Repair open circuit.
NG (RHD models)>>GO TO 4.

4. DETECT MALFUNCTIONING PART

Check the following.

- Harness connectors M201, M8
- Harness connectors M1, E101
- Harness for open or short between accelerator pedal position sensor and ECM

>> Repair open circuit.

5. CHECK APP SENSOR 2 POWER SUPPLY CIRCUIT-III

Check harness for short to power and short to ground, between the following terminals.

ECM terminal	Sensor terminal	Reference Wiring Diagram
91	APP sensor terminal 5	EC-710
47	Electric throttle control actuator terminal 1	EC-720

OK or NG

OK >> GO TO 6.
NG >> Repair short to ground or short to power in harness or connectors.

6. CHECK THROTTLE POSITION SENSOR

Refer to EC-724, "Component Inspection" .

OK or NG

OK >> GO TO 14.
NG >> GO TO 7.

7. REPLACE ELECTRIC THROTTLE CONTROL ACTUATOR

1. Replace the electric throttle control actuator.
2. Perform EC-486, "Throttle Valve Closed Position Learning" .
3. Perform EC-486, "Idle Air Volume Learning" .

>> **INSPECTION END**

8. CHECK APP SENSOR 2 GROUND CIRCUIT FOR OPEN AND SHORT

1. Turn ignition switch OFF.
2. Disconnect ECM harness connector.
3. Check harness continuity between ECM terminal 83 and APP sensor terminal 1.
   Refer to Wiring Diagram.

   Continuity should exist.

4. Also check harness for short to ground and short to power.

OK or NG

OK >> GO TO 10.
NG (LHD models)>>Repair open circuit or short to ground or short to power in harness or connectors.
NG (RHD models)>>GO TO 9.

9. DETECT MALFUNCTIONING PART

Check the following.

- Harness connectors M8, M201
- Harness connectors M1, E101
- Harness for open or short between accelerator pedal position sensor and ECM

>> Repair open circuit or short to ground or short to power in harness or connectors.

10. CHECK APP SENSOR 2 INPUT SIGNAL CIRCUIT FOR OPEN AND SHORT

1. Check harness continuity between ECM terminal 98 and APP sensor terminal 6.
   Refer to Wiring Diagram.

   Continuity should exist.

2. Also check harness for short to ground and short to power.

OK or NG

OK >> GO TO 12.
NG (LHD models)>>Repair open circuit or short to ground or short to power in harness or connectors.
NG (RHD models)>>GO TO 11.

11. DETECT MALFUNCTIONING PART

Check the following.

- Harness connectors M8, M201
- Harness connectors M1, E101
- Harness for open or short between ECM and accelerator pedal position sensor

>> Repair open circuit or short to ground or short to power in harness or connectors.

12. CHECK APP SENSOR

Refer to EC-716, "Component Inspection" .

OK or NG

OK >> GO TO 14.
NG >> GO TO 13.

13. REPLACE ACCELERATOR PEDAL ASSEMBLY

1. Replace the accelerator pedal assembly.
2. Perform EC-486, "Accelerator Pedal Released Position Learning" .
3. Perform EC-486, "Throttle Valve Closed Position Learning" .
4. Perform EC-486, "Idle Air Volume Learning" .

>> **INSPECTION END**

14. CHECK INTERMITTENT INCIDENT

Refer to EC-542, "TROUBLE DIAGNOSIS FOR INTERMITTENT INCIDENT" .

>> **INSPECTION END**

Component Inspection

BBS003B4

ACCELERATOR PEDAL POSITION SENSOR

1. Reconnect all harness connectors disconnected.
2. Turn ignition switch ON.

3. Check voltage between ECM terminals 106 (APP sensor 1 signal), 98 (APP sensor 2 signal) and ground under the following conditions.

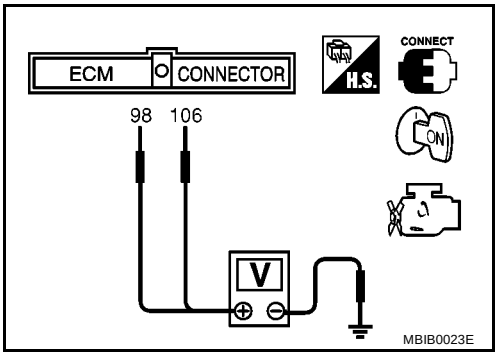

Terminal	Accelerator pedal	Voltage
106 (Accelerator pedal position sensor 1)	Fully released	0.6 - 0.9V
	Fully depressed	3.9 - 4.7V
98 (Accelerator pedal position sensor 2)	Fully released	0.3 - 0.6V
	Fully depressed	1.95 - 2.4V

4. If NG, replace accelerator pedal assembly and go to the next step.
5. Perform EC-486, "Accelerator Pedal Released Position Learning" .
6. Perform EC-486, "Throttle Valve Closed Position Learning" .
7. Perform EC-486, "Idle Air Volume Learning" .

Removal and Installation

BBS003B5

ACCELERATOR PEDAL

Refer to ACC-2, "ACCELERATOR CONTROL SYSTEM" .

DTC P2135 TP SENSOR

PFP:16119

Component Description

BBS003B6

Electric throttle control actuator consists of throttle control motor, throttle position sensor, etc. The throttle position sensor responds to the throttle valve movement.
The throttle position sensor has the two sensors. These sensors are a kind of potentiometers which transform the throttle valve position into output voltage, and emit the voltage signal to the ECM. In addition, these sensors detect the opening and closing speed of the throttle valve and feed the voltage signals to the ECM. The ECM judges the current opening angle of the throttle valve from these signals and the ECM controls the throttle control motor to make the throttle valve opening angle properly in response to driving condition.

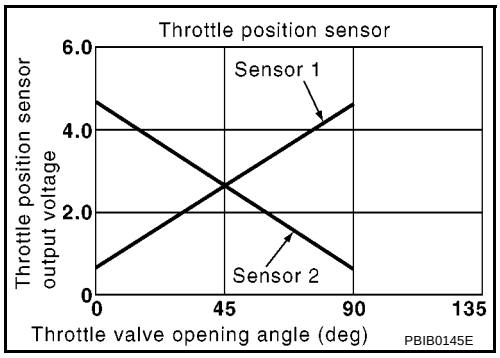

CONSULT-II Reference Value in Data Monitor Mode

BBS003B7

Specification data are reference values.

MONITOR ITEM	CONDITION		SPECIFICATION
THRTL SEN 1 THRTL SEN 2*	● Ignition switch: ON (Engine stopped)	Accelerator pedal: Fully released	More than 0.36V
	● Shift lever: 1st	Accelerator pedal: Fully depressed	Less than 4.75V

*: Throttle position sensor 2 signal is converted by ECM internally. Thus, it differs from ECM terminal voltage signal.

On Board Diagnosis Logic

BBS003B8

This self-diagnosis has the one trip detection logic.

DTC No.	Trouble diagnosis name	DTC detecting condition	Possible cause
P2135 2135	Throttle position sensor circuit range/performance	Rationally incorrect voltage is sent to ECM compared with the signals from TP sensor 1 and TP sensor 2.	● Harness or connector (TP sensor 1 and 2 circuit is open or shorted.) (APP sensor 2 circuit is shorted.) ● Electric throttle control actuator (TP sensor 1 and 2) ● Accelerator pedal position sensor (APP sensor 2)

FAIL-SAFE MODE

When the malfunction is detected, the ECM enters fail-safe mode and the MI lights up.

Engine operation condition in fail-safe mode
The ECM controls the electric throttle control actuator in regulating the throttle opening in order for the idle position to be within +10 degrees. The ECM regulates the opening speed of the throttle valve to be slower than the normal condition. So, the acceleration will be poor.

DTC Confirmation Procedure

BBS003B9

NOTE:
If DTC Confirmation Procedure has been previously conducted, always turn ignition switch OFF and wait at least 10 seconds before conducting the next test.
TESTING CONDITION:
Before performing the following procedure, confirm that battery voltage is more than 10V at idle.

WITH CONSULT-II

1. Turn ignition switch ON.
2. Select “DATA MONITOR” mode with CONSULT-II.
3. Start engine and let it idle for 1 second.
4. If DTC is detected, go to EC-721, "Diagnostic Procedure" .

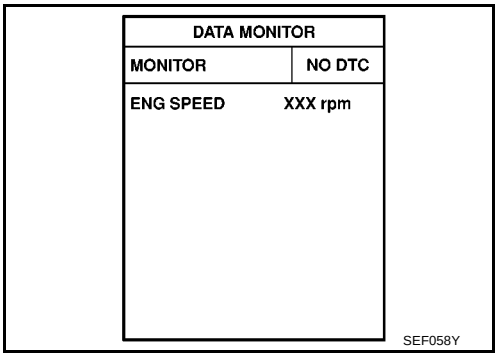

WITHOUT CONSULT-II

1. Start engine and let it idle for 1 second.
2. Turn ignition switch OFF, wait at least 10 seconds and then turn ON.
3. Perform Diagnostic Test Mode II (Self-diagnostic results) with ECM.
4. If DTC is detected, go to EC-721, "Diagnostic Procedure" .

Wiring Diagram

BBS003BA

EC-TPS3-01

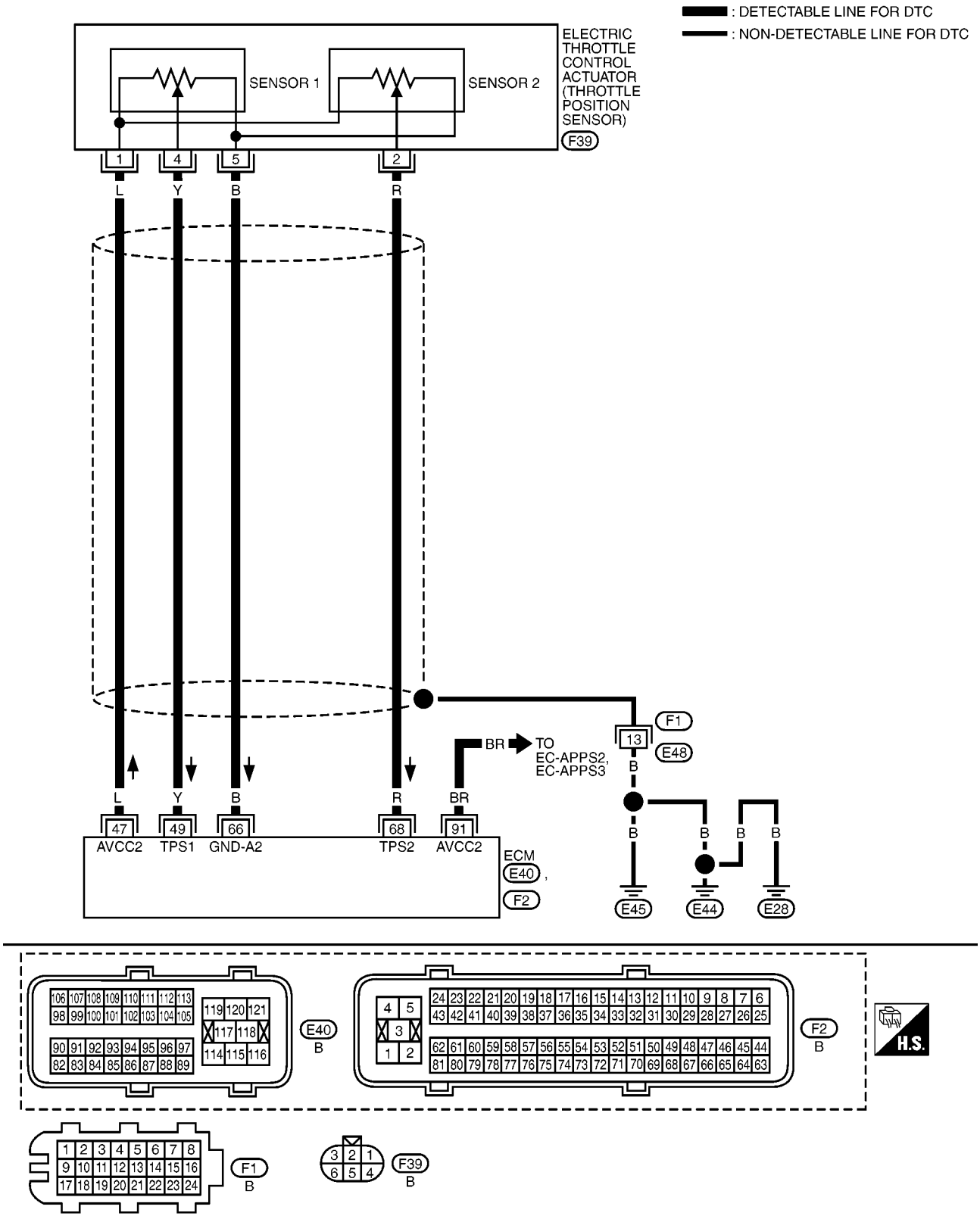

MBWA1533E

Specification data are reference values and are measured between each terminal and ground.

CAUTION:

Do not use ECM ground terminals when measuring input/output voltage. Doing so may result in damage to the ECM's transistor. Use a ground other than ECM terminals, such as the ground.

TERMINAL NO.	WIRE COLOR	ITEM	CONDITION	DATA (DC Voltage)
47	L	Sensor power supply (Throttle position sensor)	**[Ignition switch: ON]**	Approximately 5V
49	Y	Throttle position sensor 1	**[Ignition switch: ON]** ● **Engine stopped** ● Shift lever position: 1st ● Accelerator pedal: Fully released	More than 0.36V
			[Ignition switch: ON] ● **Engine stopped** ● Shift lever position: 1st ● Accelerator pedal: Fully depressed	Less than 4.75V
66	B	Sensor ground (Throttle position sensor)	**[Engine is running]** ● **Warm-up condition** ● Idle speed	Approximately 0V
68	R	Throttle position sensor 2	**[Ignition switch: ON]** ● **Engine stopped** ● Shift lever position: 1st ● Accelerator pedal: Fully released	Less than 4.75V
			[Ignition switch: ON] ● **Engine stopped** ● Shift lever position: 1st ● Accelerator pedal: Fully depressed	More than 0.36V
91	BR	Sensor power supply (APP sensor 2)	**[Ignition switch: ON]**	Approximately 5V

Diagnostic Procedure

BBS003BB

1. CHECK GROUND CONNECTIONS

1. Turn ignition switch OFF.
2. Loosen and retighten ground screws on the body.
   Refer to EC-548, "Ground Inspection" .

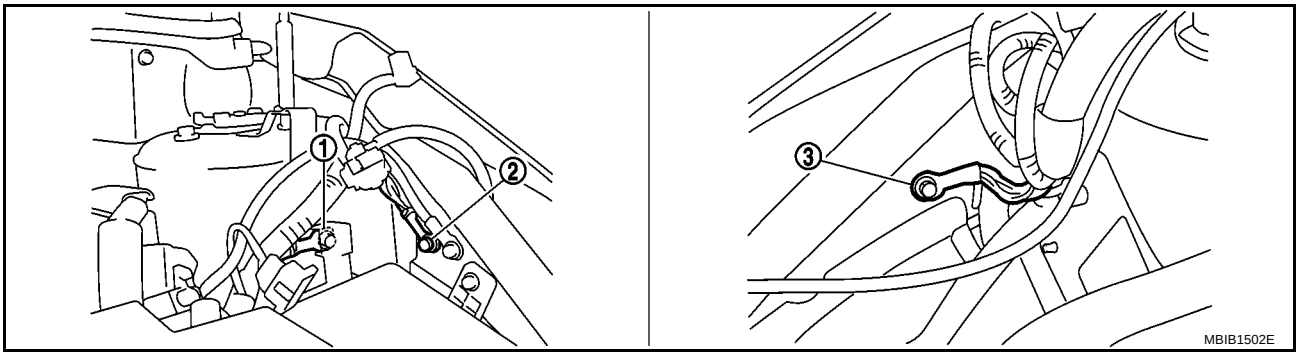

1. Body ground E44
2. Body ground E45
3. Body ground E28

OK or NG

OK >> GO TO 2.
NG >> Repair or replace ground connections.

2. CHECK THROTTLE POSITION SENSOR POWER SUPPLY CIRCUIT

1. Disconnect electric throttle control actuator harness connector.
2. Turn ignition switch ON.

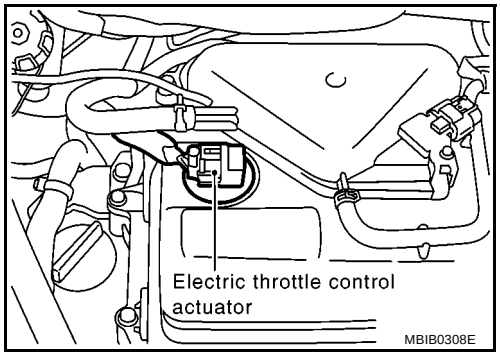

3. Check voltage between electric throttle control actuator terminal 1 and ground with CONSULT-II or tester.

Voltage: Approximately 5V

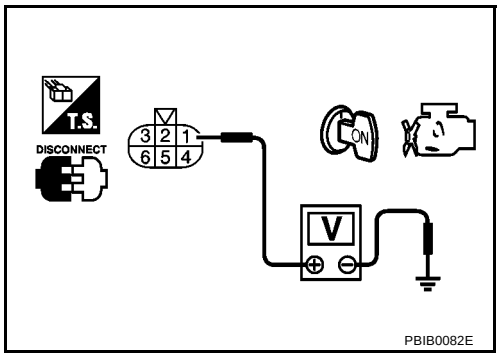

OK or NG

OK >> GO TO 7.
NG >> GO TO 3.

3. CHECK THROTTLE POSITION SENSOR POWER SUPPLY CIRCUIT-II

1. Turn ignition switch OFF.
2. Disconnect ECM harness connector.
3. Check harness continuity between electric throttle control actuator terminal 1 and ECM terminal 47. Refer to Wiring Diagram.

Continuity should exist.

OK or NG

OK >> GO TO 4.
NG >> Repair open circuit.

4. CHECK THROTTLE POSITION SENSOR POWER SUPPLY CIRCUIT-III

Check harness for short to power and short to ground, between the following terminals.

ECM terminal	Sensor terminal	Reference Wiring Diagram
47	Electric throttle control actuator terminal 1	EC-720
91	APP sensor terminal 5	EC-710

OK or NG

OK >> GO TO 5.
NG >> Repair short to ground or short to power in harness or connectors.

5. CHECK APP SENSOR

Refer to EC-716, "Component Inspection" .

OK or NG

OK >> GO TO 11
NG >> GO TO 6.

6. REPLACE ACCELERATOR PEDAL ASSEMBLY

1. Replace accelerator pedal assembly.
2. Perform EC-486, "Accelerator Pedal Released Position Learning" .
3. Perform EC-486, "Throttle Valve Closed Position Learning" .
4. Perform EC-486, "Idle Air Volume Learning" .

>> **INSPECTION END**

7. CHECK THROTTLE POSITION SENSOR GROUND CIRCUIT FOR OPEN AND SHORT

1. Turn ignition switch OFF.
2. Disconnect ECM harness connector.
3. Check harness continuity between ECM terminal 66 and electric throttle control actuator terminal 5.
   Refer to Wiring Diagram.

   Continuity should exist.

4. Also check harness for short to ground and short to power.

OK or NG

OK >> GO TO 8.
NG >> Repair open circuit or short to ground or short to power in harness or connectors.

8. CHECK THROTTLE POSITION SENSOR INPUT SIGNAL CIRCUIT FOR OPEN AND SHORT

1. Check harness continuity between ECM terminal 49 and electric throttle control actuator terminal 4, ECM terminal 68 and electric throttle control actuator terminal 2.
   Refer to Wiring Diagram.

   Continuity should exist.

2. Also check harness for short to ground and short to power.

OK or NG

OK >> GO TO 9.
NG >> Repair open circuit or short to ground or short to power in harness or connectors.

9. CHECK THROTTLE POSITION SENSOR

Refer to EC-724, "Component Inspection" .

OK or NG

OK >> GO TO 11.
NG >> GO TO 10.

10. REPLACE ELECTRIC THROTTLE CONTROL ACTUATOR

1. Replace the electric throttle control actuator.
2. Perform EC-486, "Throttle Valve Closed Position Learning" .
3. Perform EC-486, "Idle Air Volume Learning" .

>> **INSPECTION END**

11. CHECK INTERMITTENT INCIDENT

Refer to EC-542, "TROUBLE DIAGNOSIS FOR INTERMITTENT INCIDENT" .

>> **INSPECTION END**

Component Inspection

BBS003BC

THROTTLE POSITION SENSOR

1. Reconnect all harness connectors disconnected.
2. Perform EC-486, "Throttle Valve Closed Position Learning" .
3. Turn ignition switch ON.
4. Set shift lever to 1st position.
5. Check voltage between ECM terminals 49 (TP sensor 1 signal), 68 (TP sensor 2 signal) and ground under the following conditions.

Terminal	Accelerator pedal	Voltage
49 (Throttle position sensor 1)	Fully released	More than 0.36V
	Fully depressed	Less than 4.75V
68 (Throttle position sensor 2)	Fully released	Less than 4.75V
	Fully depressed	More than 0.36V

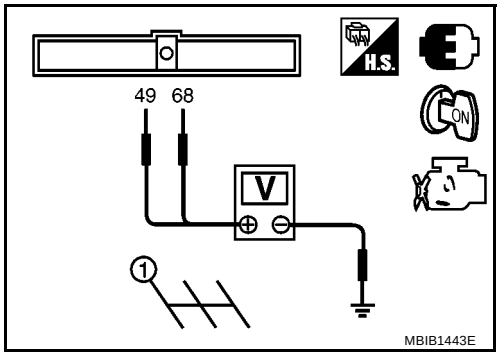

6. If NG, replace electric throttle control actuator and go to the next step.
7. Perform EC-486, "Throttle Valve Closed Position Learning" .
8. Perform EC-486, "Idle Air Volume Learning" .

Removal and Installation

BBS003BD

ELECTRIC THROTTLE CONTROL ACTUATOR

Refer to EM-18, "AIR CLEANER AND AIR DUCT" .

DTC P2138 APP SENSOR

PFP:18002

Component Description

BBS003BE

The accelerator pedal position sensor is installed on the upper end of the accelerator pedal assembly. The sensor detects the accelerator position and sends a signal to the ECM.
Accelerator pedal position sensor has two sensors. These sensors are a kind of potentiometers which transform the accelerator pedal position into output voltage, and emit the voltage signal to the ECM. In addition, these sensors detect the opening and closing speed of the accelerator pedal and feed the voltage signals to the ECM. The ECM judges the current opening angle of the accelerator pedal from these signals and controls the throttle control motor based on these signals.

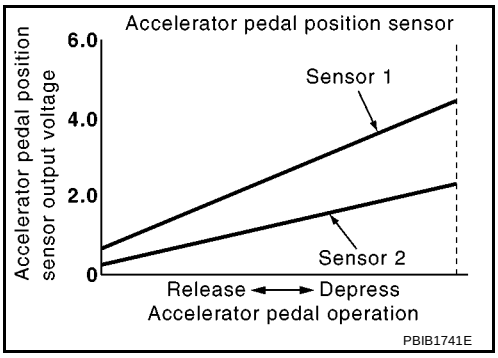

Idle position of the accelerator pedal is determined by the ECM receiving the signal from the accelerator pedal position sensor. The ECM uses this signal for the engine operation such as fuel cut.

CONSULT-II Reference Value in Data Monitor Mode

BBS003BF

Specification data are reference values.

MONITOR ITEM	CONDITION		SPECIFICATION
ACCEL SEN 1	● Ignition switch: ON (Engine stopped)	Accelerator pedal: Fully released	0.6 - 0.9V
		Accelerator pedal: Fully depressed	4.0 - 4.8V
ACCEL SEN 2*	● Ignition switch: ON (Engine stopped)	Accelerator pedal: Fully released	0.6 - 0.9V
		Accelerator pedal: Fully depressed	3.9 - 4.8V
CLSD THL POS	● Ignition switch: ON (Engine stopped)	Accelerator pedal: Fully released	ON
		Accelerator pedal: Slightly depressed	OFF

*: Accelerator pedal position sensor 2 signal is converted by ECM internally. Thus, it differs from ECM terminal voltage.

On Board Diagnosis Logic

BBS003BG

This self-diagnosis has the one trip detection logic.

NOTE:
If DTC P2138 is displayed with DTC P1229, first perform trouble diagnosis for DTC P1229. Refer to EC-680, "DTC P1229 SENSOR POWER SUPPLY" .

DTC No.	Trouble diagnosis name	DTC detecting condition	Possible cause
P2138 2138	Accelerator pedal position sensor circuit range/performance	Rationally incorrect voltage is sent to ECM compared with the signals from APP sensor 1 and APP sensor 2.	● Harness or connector (APP sensor 1 and 2 circuit is open or shorted.) (TP sensor circuit is shorted.) ● Accelerator pedal position sensor (APP sensor 1 and 2) ● Electric throttle control actuator (TP sensor 1 and 2)

FAIL-SAFE MODE

When the malfunction is detected, the ECM enters fail-safe mode and the MI lights up.

Engine operating condition in fail-safe mode
The ECM controls the electric throttle control actuator in regulating the throttle opening in order for the idle position to be within +10 degrees. The ECM regulates the opening speed of the throttle valve to be slower than the normal condition. So, the acceleration will be poor.

DTC Confirmation Procedure

BBS003BH

NOTE:
If DTC Confirmation Procedure has been previously conducted, always turn ignition switch OFF and wait at least 10 seconds before conducting the next test.
TESTING CONDITION:
Before performing the following procedure, confirm that battery voltage is more than 10V at idle.

WITH CONSULT-II

1. Turn ignition switch ON.
2. Select “DATA MONITOR” mode with CONSULT-II.
3. Start engine and let it idle for 1 second.
4. If DTC is detected, go to EC-730, "Diagnostic Procedure" .

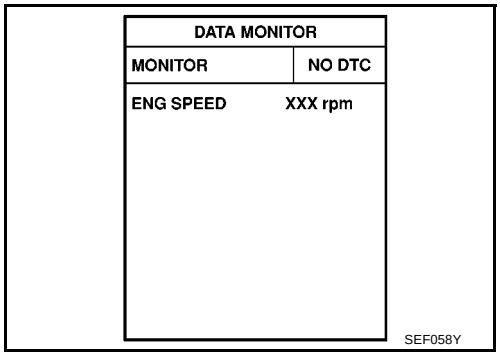

WITHOUT CONSULT-II

1. Start engine and let it idle for 1 second.
2. Turn ignition switch OFF, wait at least 10 seconds and then turn ON.
3. Perform Diagnostic Test Mode II (Self-diagnostic results) with ECM.
4. If DTC is detected, go to EC-730, "Diagnostic Procedure" .

Wiring Diagram
LHD MODELS

BBS003BI

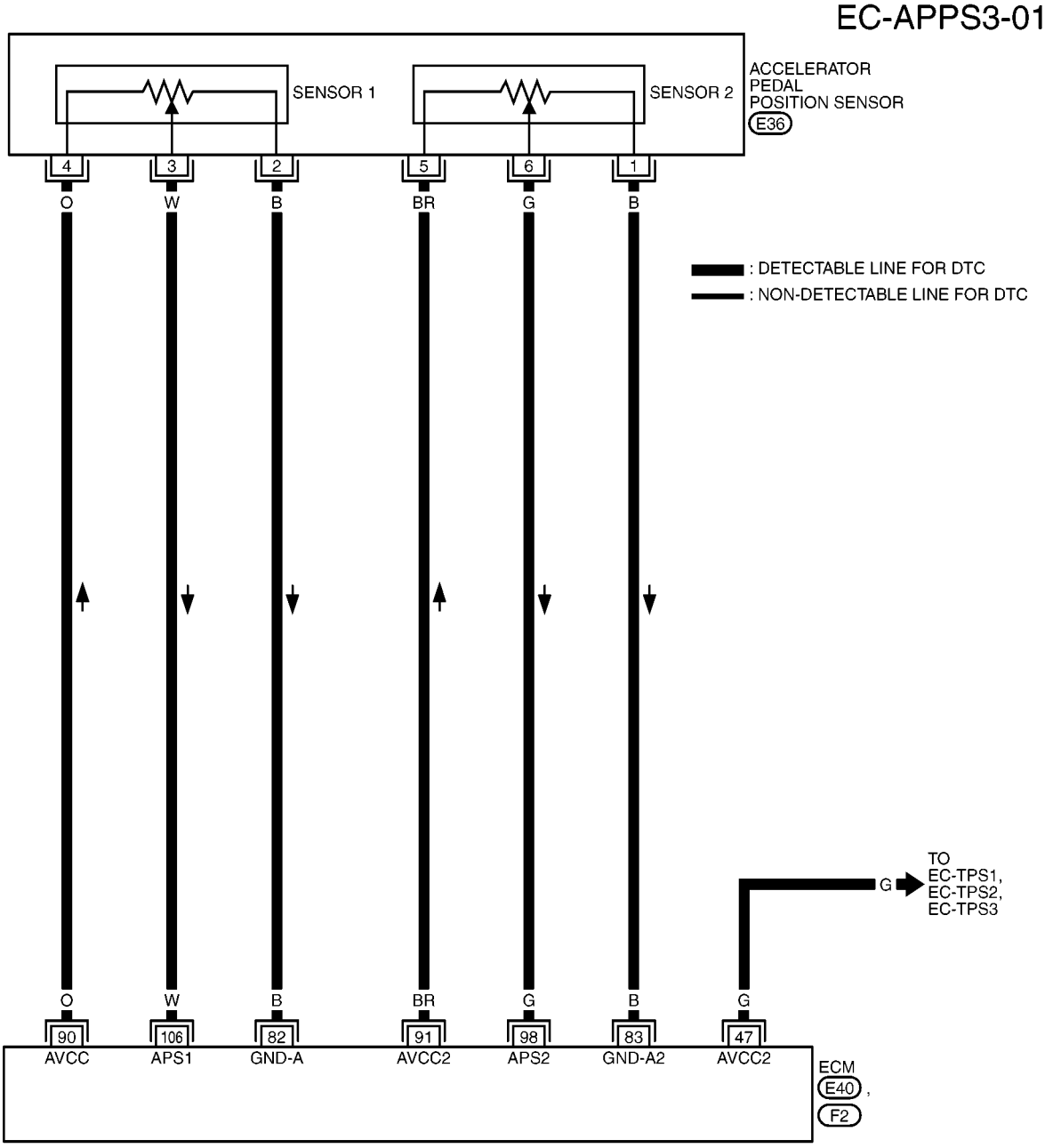

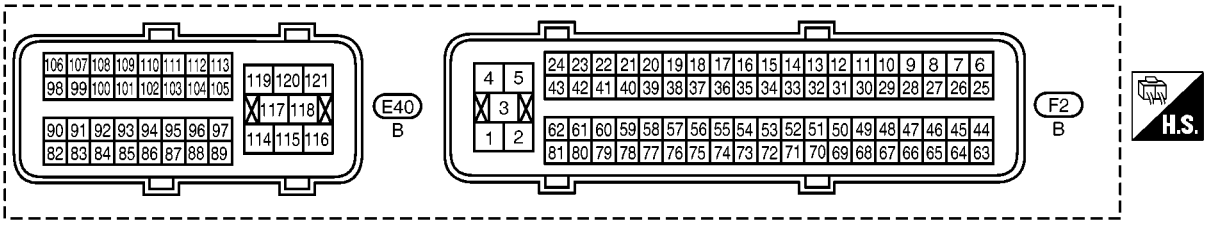

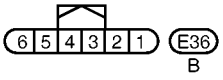

MBWA1534E

Specification data are reference values and are measured between each terminal and ground.

CAUTION:

Do not use ECM ground terminals when measuring input/output voltage. Doing so may result in damage to the ECM's transistor. Use a ground other than ECM terminals, such as the ground.

TERMINAL NO.	WIRE COLOR	ITEM	CONDITION	DATA (DC Voltage)
47	G	Sensor power supply (Throttle position sensor)	**[Ignition switch: ON]**	Approximately 5V
82	B	Sensor ground (APP sensor 1)	**[Engine is running]** ● **Warm-up condition** ● Idle speed	Approximately 0V
83	B	Sensor ground (APP sensor 2)	**[Ignition switch: ON]** ● **Warm-up condition** ● Idle speed	Approximately 0V
90	O	Sensor power supply (APP sensor 1)	**[Ignition switch: ON]**	Approximately 5V
91	BR	Sensor power supply (APP sensor 2)	**[Ignition switch: ON]**	Approximately 5V
98	G	Accelerator pedal position sensor 2	**[Ignition switch: ON]** ● **Engine stopped** ● Accelerator pedal: Fully released	0.3 - 0.6V
			[Ignition switch: ON] ● **Engine stopped** ● Accelerator pedal: Fully depressed	1.95 - 2.4V
106	W	Accelerator pedal position sensor 1	**[Ignition switch: ON]** ● **Engine stopped** ● Accelerator pedal: Fully released	0.6 - 0.9V
			[Ignition switch: ON] ● **Engine stopped** ● Accelerator pedal: Fully depressed	3.9 - 4.7V

RHD MODELS

EC-APPS3-02

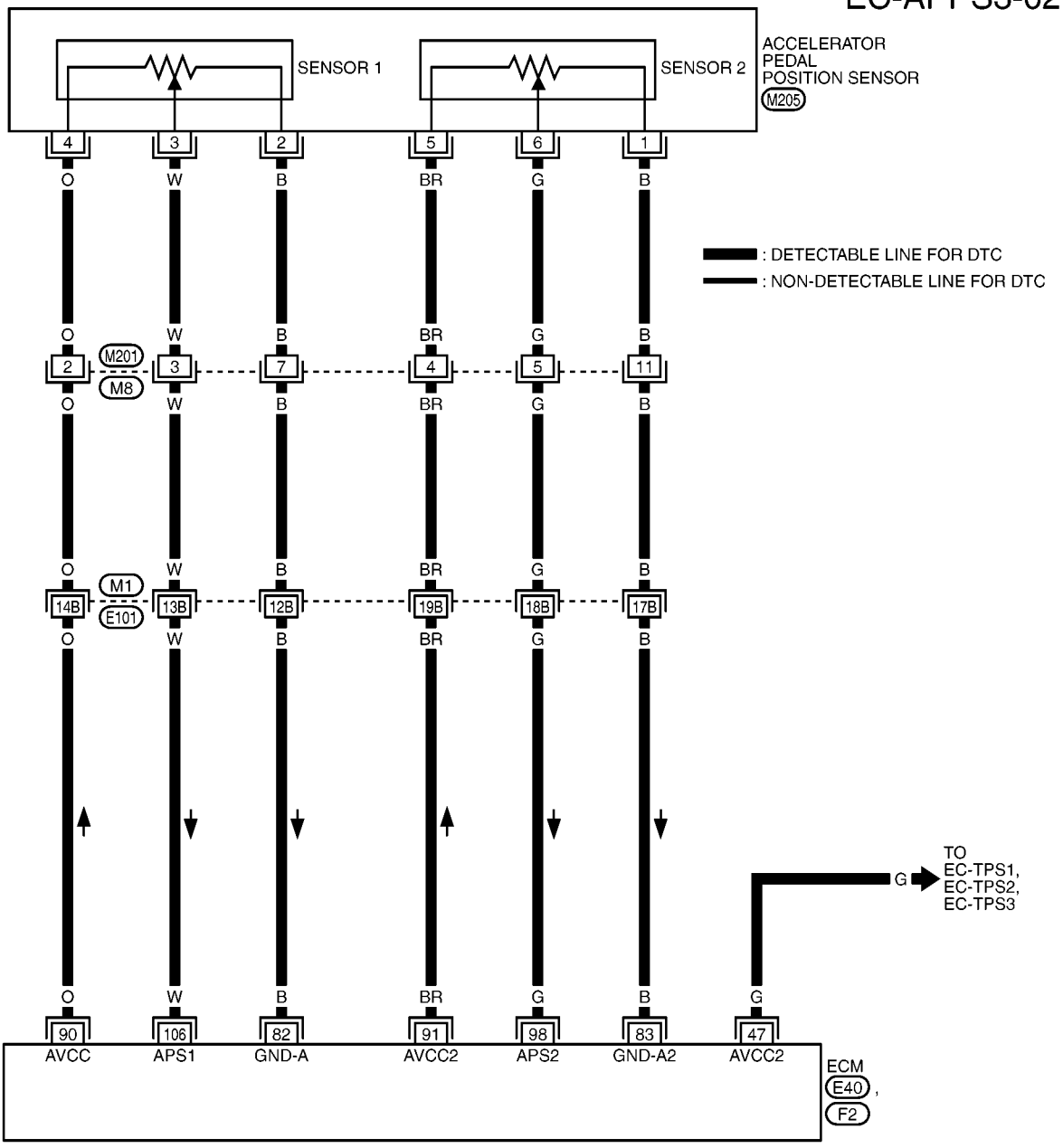

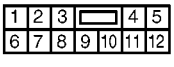

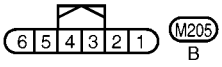

REFER TO THE FOLLOWING.
M1 - SUPER MULTIPLE JUNCTION (SMJ)

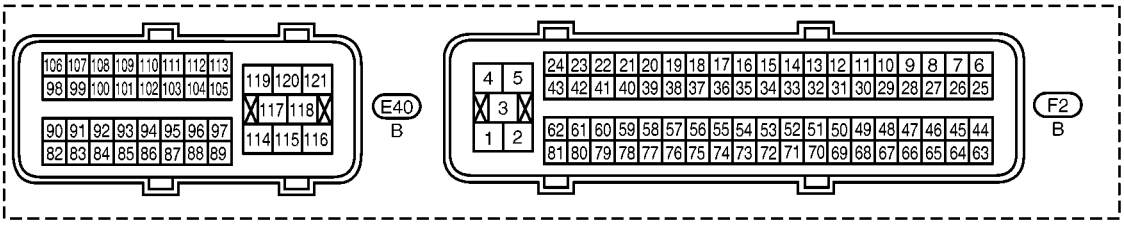

MBWA1535E

Specification data are reference values and are measured between each terminal and ground.

CAUTION:

Do not use ECM ground terminals when measuring input/output voltage. Doing so may result in damage to the ECM's transistor. Use a ground other than ECM terminals, such as the ground.

TERMINAL NO.	WIRE COLOR	ITEM	CONDITION	DATA (DC Voltage)
47	G	Sensor power supply (Throttle position sensor)	**[Ignition switch: ON]**	Approximately 5V
82	B	Sensor ground (APP sensor 1)	**[Engine is running]** ● **Warm-up condition** ● Idle speed	Approximately 0V
83	B	Sensor ground (APP sensor 2)	**[Ignition switch: ON]** ● **Warm-up condition** ● Idle speed	Approximately 0V
90	O	Sensor power supply (APP sensor 1)	**[Ignition switch: ON]**	Approximately 5V
91	BR	Sensor power supply (APP sensor 2)	**[Ignition switch: ON]**	Approximately 5V
98	G	Accelerator pedal position sensor 2	**[Ignition switch: ON]** ● **Engine stopped** ● Accelerator pedal: Fully released	0.3 - 0.6V
			[Ignition switch: ON] ● **Engine stopped** ● Accelerator pedal: Fully depressed	1.95 - 2.4V
106	W	Accelerator pedal position sensor 1	**[Ignition switch: ON]** ● **Engine stopped** ● Accelerator pedal: Fully released	0.6 - 0.9V
			[Ignition switch: ON] ● **Engine stopped** ● Accelerator pedal: Fully depressed	3.9 - 4.7V

Diagnostic Procedure

BBS003BJ

1. CHECK GROUND CONNECTIONS

1. Turn ignition switch OFF.
2. Loosen and retighten ground screws on the body.
   Refer to EC-548, "Ground Inspection" .

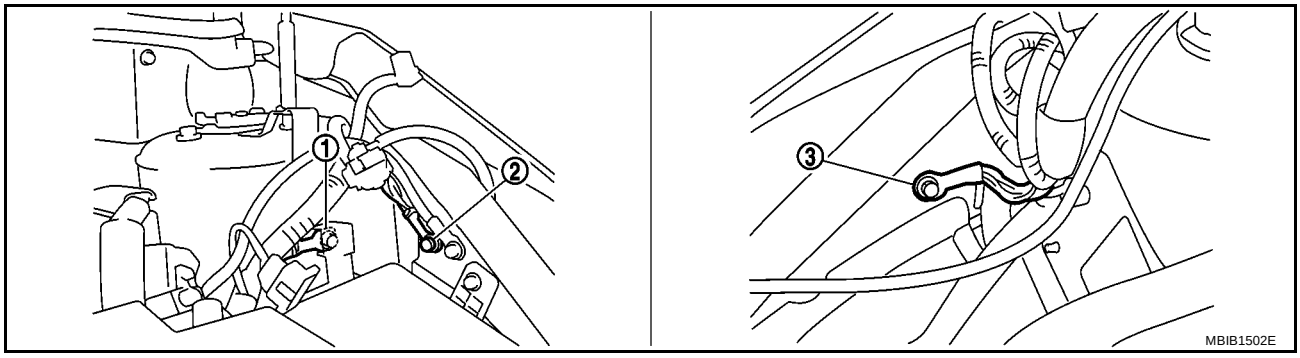

1. Body ground E44
2. Body ground E45
3. Body ground E28

OK or NG

OK >> GO TO 2.
NG >> Repair or replace ground connections.

2. CHECK APP SENSOR 1 POWER SUPPLY CIRCUIT

1. Disconnect accelerator pedal position (APP) sensor harness connector.
2. Turn ignition switch ON.

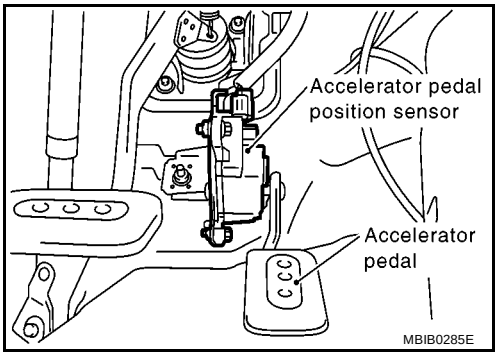

3. Check voltage between APP sensor terminal 4 and ground with CONSULT-II or tester.

Voltage: Approximately 5V

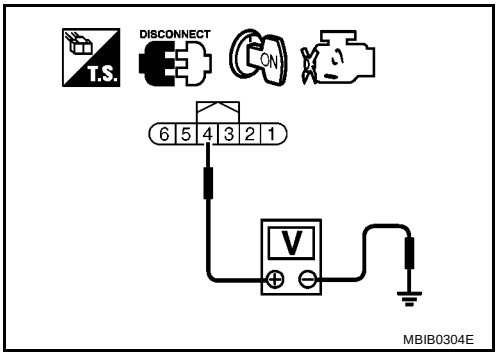

OK or NG

OK >> GO TO 4.
NG (LHD models)>>Repair open circuit or short to ground or short to power in harness or connectors.
NG (RHD models)>>GO TO 3.

3. DETECT MALFUNCTIONING PART

Check the following.

- Harness connectors M1, E101
- Harness connectors M8, M201
- Harness for open or short between ECM and accelerator pedal position sensor

>> Repair open circuit or short to ground or short to power in harness or connectors.

4. CHECK APP SENSOR 2 POWER SUPPLY CIRCUIT-I

Check voltage between APP sensor terminal 5 and ground with CONSULT-II or tester.

Voltage: Approximately 5V

OK or NG

OK >> GO TO 10.
NG >> GO TO 5.

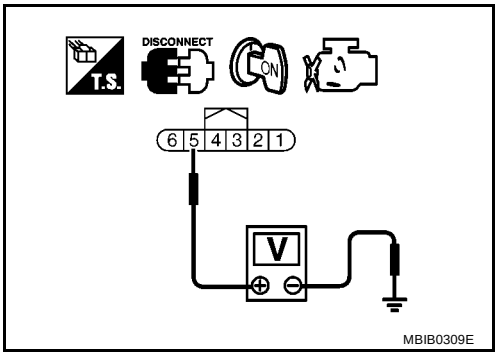

5. CHECK APP SENSOR 2 POWER SUPPLY CIRCUIT-II

1. Turn ignition switch OFF.
2. Disconnect ECM harness connector.
3. Check harness continuity between APP sensor terminal 5 and ECM terminal 91.
   Refer to Wiring Diagram.

Continuity should exist.

OK or NG

OK >> GO TO 7.
NG (LHD models)>>Repair open circuit.
NG (RHD models)>>GO TO 6.

6. DETECT MALFUNCTIONING PART

Check the following.

- Harness connectors M1, E101
- Harness connectors M8, M201
- Harness for open or short between accelerator pedal position sensor and ECM

>> Repair open circuit.

7. CHECK APP SENSOR 2 POWER SUPPLY CIRCUIT-III

Check harness for short to power and short to ground, between the following terminals.

ECM terminal	Sensor terminal	Reference Wiring Diagram
91	APP sensor terminal 5	EC-727
47	Electric throttle control actuator terminal 1	EC-720

OK or NG

OK >> GO TO 8.
NG >> Repair short to ground or short to power in harness or connectors.

8. CHECK THROTTLE POSITION SENSOR

Refer to EC-724, "Component Inspection" .

OK or NG

OK >> GO TO 16.
NG >> GO TO 9.

9. REPLACE ELECTRIC THROTTLE CONTROL ACTUATOR

1. Replace the electric throttle control actuator.
2. Perform EC-486, "Throttle Valve Closed Position Learning" .
3. Perform EC-486, "Idle Air Volume Learning" .

>> **INSPECTION END**

10. CHECK APP SENSOR GROUND CIRCUIT FOR OPEN AND SHORT

1. Turn ignition switch OFF.
2. Disconnect ECM harness connector.
3. Check harness continuity between ECM terminal 82 and APP sensor terminal 2, ECM terminal 83 and APP sensor terminal 1.
   Refer to Wiring Diagram.

   Continuity should exist.

4. Also check harness for short to ground and short to power.

OK or NG

OK >> GO TO 12.
NG (LHD models)>>Repair open circuit or short to ground or short to power in harness or connectors.
NG (RHD models)>>GO TO 11.

11. DETECT MALFUNCTIONING PART

Check the following.

- Harness connectors M1, E101
- Harness connectors M8, M201
- Harness for open or short between ECM and accelerator pedal position sensor

>> Repair open circuit or short to ground or short to power in harness or connectors.

12. CHECK APP SENSOR INPUT SIGNAL CIRCUIT FOR OPEN AND SHORT

1. Check harness continuity between ECM terminal 106 and APP sensor terminal 3, ECM terminal 98 and APP sensor terminal 6.
   Refer to Wiring Diagram.

   Continuity should exist.

2. Also check harness for short to ground and short to power.

OK or NG

OK >> GO TO 14.
NG (LHD models)>>Repair open circuit or short to ground or short to power in harness or connectors.
NG (RHD models)>>GO TO 13.

13. DETECT MALFUNCTIONING PART

Check the following.

- Harness connectors M1, E101
- Harness connectors M8, M201
- Harness for open or short between ECM and accelerator pedal position sensor

>> Repair open circuit or short to ground or short to power in harness or connectors.

14. CHECK APP SENSOR

Refer to EC-734, "Component Inspection" .

OK or NG

OK >> GO TO 16.
NG >> GO TO 15.

15. REPLACE ACCELERATOR PEDAL ASSEMBLY

1. Replace the accelerator pedal assembly.
2. Perform EC-486, "Accelerator Pedal Released Position Learning" .
3. Perform EC-486, "Throttle Valve Closed Position Learning" .
4. Perform EC-486, "Idle Air Volume Learning" .

>> **INSPECTION END**

16. CHECK INTERMITTENT INCIDENT

Refer to EC-542, "TROUBLE DIAGNOSIS FOR INTERMITTENT INCIDENT" .

>> **INSPECTION END**

Component Inspection

BBS003BK

ACCELERATOR PEDAL POSITION SENSOR

1. Reconnect all harness connectors disconnected.
2. Turn ignition switch ON.
3. Check voltage between ECM terminals 106 (APP sensor 1 signal), 98 (APP sensor 2 signal) and ground under the following conditions.

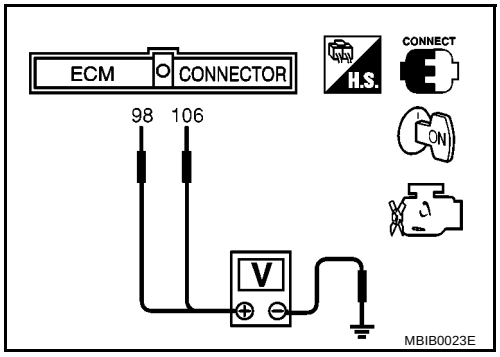

Terminal	Accelerator pedal	Voltage
106 (Accelerator pedal position sensor 1)	Fully released	0.6 - 0.9V
	Fully depressed	3.9 - 4.7V
98 (Accelerator pedal position sensor 2)	Fully released	0.3 - 0.6V
	Fully depressed	1.95 - 2.4V

4. If NG, replace accelerator pedal assembly and go to the next step.
5. Perform EC-486, "Accelerator Pedal Released Position Learning" .
6. Perform EC-486, "Throttle Valve Closed Position Learning" .
7. Perform EC-486, "Idle Air Volume Learning" .

Removal and Installation

BBS003BL

ACCELERATOR PEDAL

Refer to EM-18, "AIR CLEANER AND AIR DUCT" .

ELECTRICAL LOAD SIGNAL

PFP:25350

Description

BBS003D8

The electrical load signal (Headlamp switch signal, rear window defogger switch signal, etc.) is transferred through the CAN communication line from IPDM E/R to ECM.

CONSULT-II Reference Value in Data Monitor Mode

BBS003D9

Specification data are reference values.

MONITOR ITEM	CONDITION		SPECIFICATION
LOAD SIGNAL	● Ignition switch: ON	Rear window defogger switch is ON and/or lighting switch is 2nd.	ON
		Rear window defogger switch is OFF and lighting switch is OFF.	OFF
HEATER FAN SW	● Engine: After warming up, idle the engine	Heater fan: Operating	ON
		Heater fan: Not operating	OFF

Diagnostic Procedure

BBS003DA

1. CHECK LOAD SIGNAL CIRCUIT OVERALL FUNCTION-I

1. Turn ignition switch ON.
2. Connect CONSULT-II and select “DATA MONITOR” mode.
3. Select “LOAD SIGNAL” and check indication under the following conditions.

Condition	Indication
Rear window defogger switch: ON	ON
Rear window defogger switch: OFF	OFF

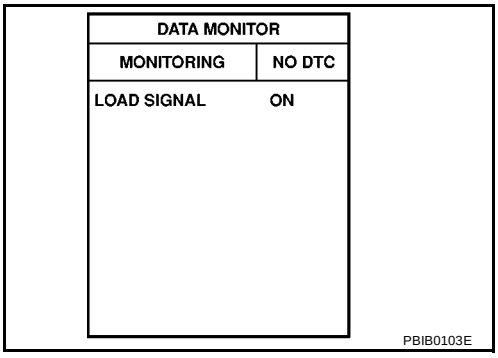

OK or NG

OK >> GO TO 2.
NG >> GO TO 4.

2. CHECK LOAD SIGNAL CIRCUIT OVERALL FUNCTION-II

Check “LOAD SIGNAL” indication under the following conditions.

Condition	Indication
Lighting switch: 2nd position	ON
Lighting switch: OFF	OFF

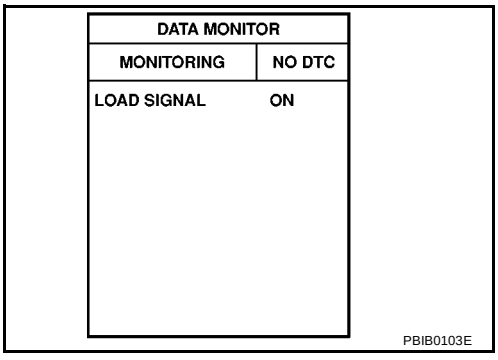

OK or NG

OK >> GO TO 3.
NG >> GO TO 5.

3. CHECK HEATER FAN SIGNAL CIRCUIT OVERALL FUNCTION

With CONSULT-II

Check “HEATER FAN SW” in “DATA MONITOR” mode with CONSULT-II under the following conditions.

Condition	HEATER FAN SW
Heater fan control switch: ON	ON
Heater fan control switch: OFF	OFF

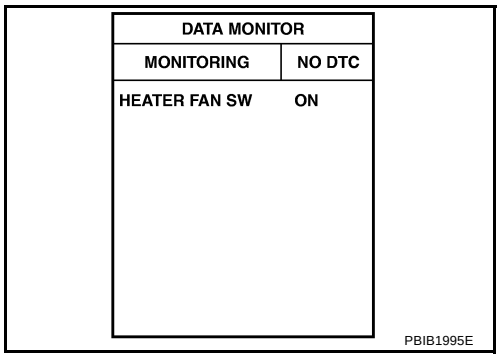

OK or NG

OK >> **INSPECTION END**
NG >> GO TO 6.

4. CHECK REAR WINDOW DEFOGGER SYSTEM

Refer to GW-12, "REAR WINDOW DEFOGGER" .

>> **INSPECTION END**

5. CHECK HEADLAMP SYSTEM

Refer to LT-7, "HEADLAMP -CONVENTIONAL TYPE-" or LT-35, "HEADLAMP - DAYTIME LIGHT SYSTEM - " .

>> **INSPECTION END**

6. CHECK HEATER FAN CONTROL SYSTEM

Refer to ATC-26, "TROUBLE DIAGNOSIS" or MTC-23, "TROUBLE DIAGNOSIS" .

>> **INSPECTION END**

EVAP CANISTER PURGE VOLUME CONTROL SOLENOID VALVE

PFP:14920

Description

BBS003CK

SYSTEM DESCRIPTION

Sensor	Input Signal to ECM	ECM Function	Actuator
Crankshaft position sensor (POS) Camshaft position sensor (PHASE)	Engine speed*1	EVAP canister purge flow control	EVAP canister purge volume control solenoid valve
Manifold absolute pressure sensor	Amount of intake air		
Engine coolant temperature sensor	Engine coolant temperature		
Battery	Battery voltage*1		
Throttle position sensor	Throttle position		
Accelerator pedal position sensor	Accelerator pedal position		
Heated oxygen sensors 1	Density of oxygen in exhaust gas (Mixture ratio feedback signal)		
Wheel sensor	Vehicle speed*2		

*1: ECM determines the start signal status by the signals of engine speed and battery voltage.
*2: This signal is sent to the ECM through CAN communication line.

This system controls flow rate of fuel vapor from the EVAP canister. The opening of the vapor by-pass passage in the EVAP canister purge volume control solenoid valve changes to control the flow rate. The EVAP canister purge volume control solenoid valve repeats ON/OFF operation according to the signal sent from the ECM. The opening of the valve varies for optimum engine control. The optimum value stored in the ECM is determined by considering various engine conditions. When the engine is operating, the flow rate of fuel vapor from the EVAP canister is regulated as the air flow changes.

COMPONENT DESCRIPTION

The EVAP canister purge volume control solenoid valve uses a ON/OFF duty to control the flow rate of fuel vapor from the EVAP canister. The EVAP canister purge volume control solenoid valve is moved by ON/OFF pulses from the ECM. The longer the ON pulse, the greater the amount of fuel vapor that will flow through the valve.

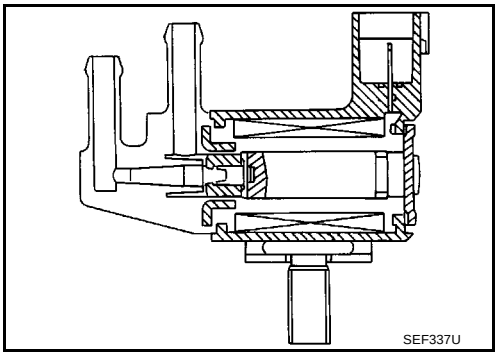

CONSULT-II Reference Value in Data Monitor Mode

BBS003CL

Specification data are reference values.

MONITOR ITEM	CONDITION		SPECIFICATION
PURG VOL C/V	● Engine: After warming up ● Shift lever: Neutral ● Air conditioner switch: OFF ● No load	Idle	0%
		2,000 rpm	20 - 30%

Wiring Diagram

BBS003CM

EC-PRGVLV-01

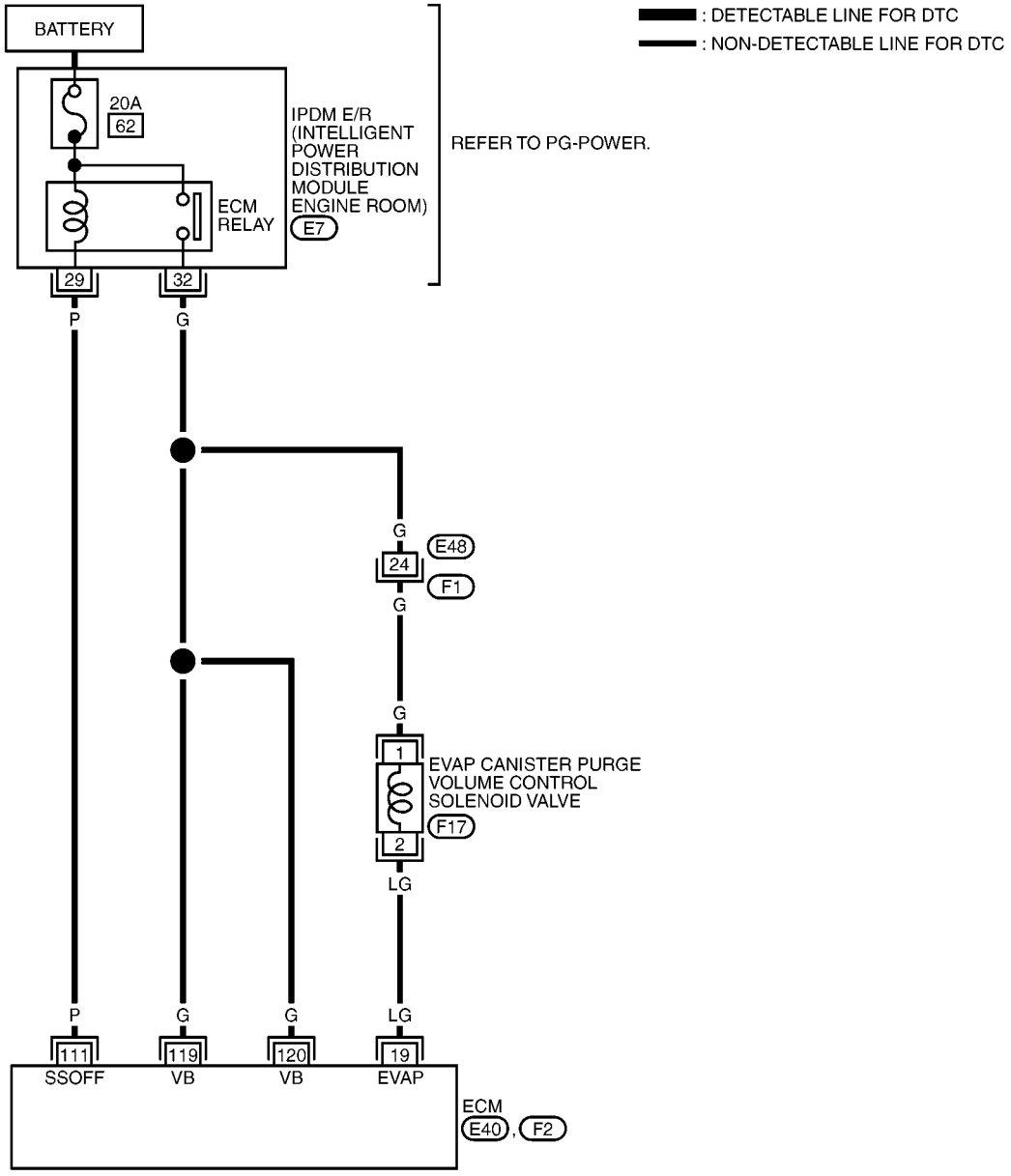

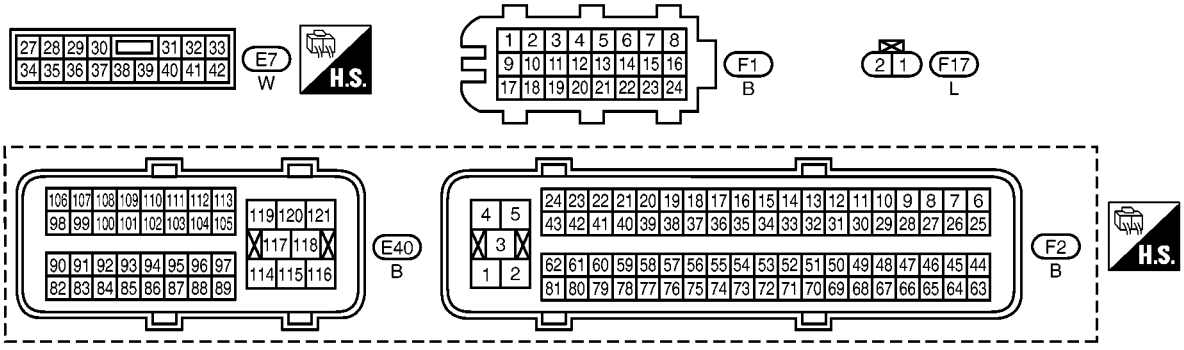

MBWA1545E

Specification data are reference values and are measured between each terminal and ground.
Pulse signal is measured by CONSULT-II.

CAUTION:

Do not use ECM ground terminals when measuring input/output voltage. Doing so may result in damage to the ECM's transistor. Use a ground other than ECM terminals, such as the ground.

TERMINAL NO.	WIRE COLOR	ITEM	CONDITION	DATA (DC Voltage)
19	LG	EVAP canister purge volume control solenoid valve	**[Engine is running]** ● Idle speed	BATTERY VOLTAGE (11 - 14V)★ 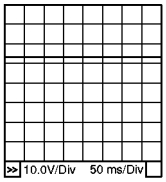 PBIB0050E
			[Engine is running] ● Engine speed: About 2,000 rpm (More than 100 seconds after starting engine)	Approximately 10V★ 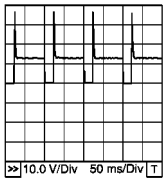 PBIB0520E
111	P	ECM relay (Self shut-off)	**[Engine is running]** **[Ignition switch: OFF]** ● For a few seconds after turning ignition switch OFF	0 - 1.0V
			[Ignition switch: OFF] ● More than a few seconds passed after turning ignition switch OFF	BATTERY VOLTAGE (11 - 14V)
119 120	G G	Power supply for ECM	**[Ignition switch: ON]**	BATTERY VOLTAGE (11 - 14V)

★: Average voltage for pulse signal (Actual pulse signal can be confirmed by oscilloscope.)

Diagnostic Procedure

BBS003CN

1. CHECK OVERALL FUNCTION

With CONSULT-II

1. Turn ignition switch OFF.
2. Disconnect the EVAP purge hose connected to the EVAP canister.
3. Turn ignition switch ON, and select “PURG VOL CONT/V” in “ACTIVE TEST” mode with CONSULT-II.
4. Start engine and let it idle.

ACTIVE TEST	
PURG VOL CONT/V	XXX %
MONITOR	
ENG SPEED	XXX rpm
A/F ALPHA-B1	XXX %
HO2S1 MNTR (B1)	LEAN

PBIB0569E

5. Change the valve opening percentage with touching “Qu” or “Qd” on CONSULT-II screen, and check for vacuum existence at the EVAP purge hose (2) under the following conditions.

– ⇦: Vehicle front
– EVAP canister (1)

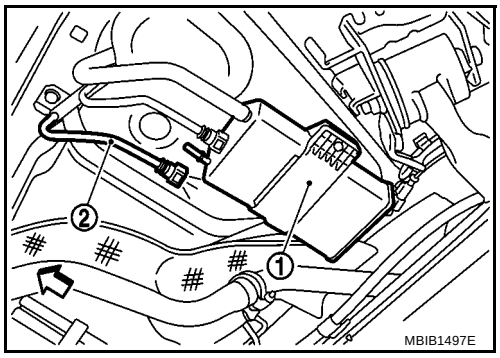

MBIB1497E

Conditions (PURG VOL CONT/V value)	Vacuum
0%	Should not exist
100%	Should exist

Without CONSULT-II

1. Turn ignition switch OFF.
2. Disconnect the EVAP purge hose connected to the EVAP canister.
3. Start engine and let it idle for at least 80 seconds.
4. Check for vacuum existence at the EVAP purge hose (2) under the following conditions.

– ⇦: Vehicle front
– EVAP canister (1)

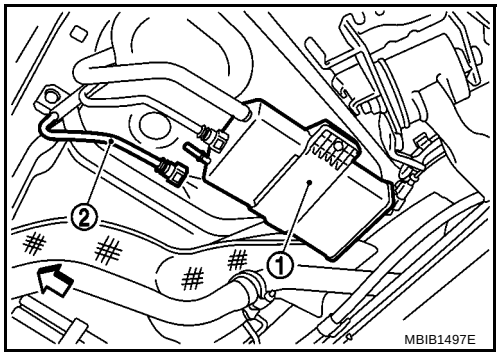

MBIB1497E

Conditions	Vacuum
At idle	Should not exist
Engine speed: About 2,000 rpm	Should exist

OK or NG

OK >> GO TO 2.
NG >> GO TO 3.

2. CHECK EVAP CANISTER

Refer to EC-472, "Component Inspection" .

OK or NG

OK >> **INSPECTION END**
NG >> Replace EVAP canister.

3. CHECK EVAP PURGE LINE

Check EVAP purge line (pipe, rubber tube, fuel tank and EVAP canister) for cracks or improper connection. Refer to EC-469, "EVAPORATIVE EMISSION SYSTEM" .

OK or NG

OK >> GO TO 4.
NG >> Repair or reconnect the hose.

4. CHECK EVAP CANISTER PURGE VOLUME CONTROL SOLENOID VALVE POWER SUPPLY CIRCUIT

1. Turn ignition switch OFF.
2. Disconnect EVAP canister purge volume control solenoid valve harness connector.
3. Turn ignition switch ON.

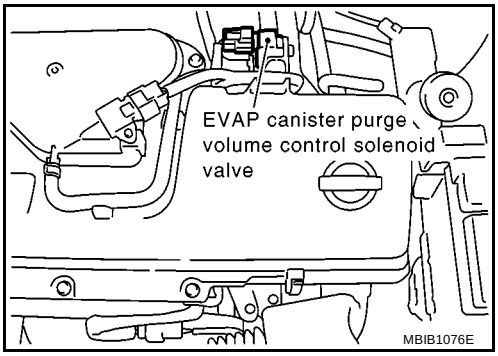

4. Check voltage between EVAP canister purge volume control solenoid valve terminal 1 and ground with CONSULT-II or tester.

Voltage: Battery voltage

OK or NG

OK >> GO TO 6.
NG >> GO TO 5.

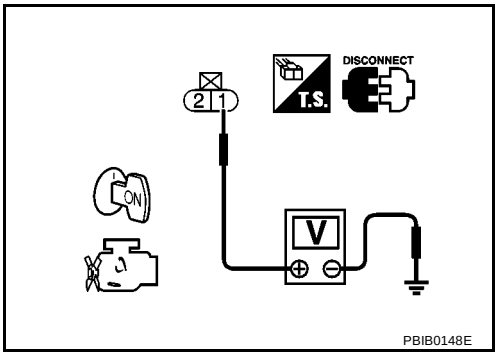

5. DETECT MALFUNCTIONING PART

Check the following.

- Harness connectors E48, F1
- Harness for open or short between EVAP canister purge volume control solenoid valve and IPDM E/R
- Harness for open or short between EVAP canister purge volume control solenoid valve and ECM

>> Repair harness or connectors.

6. CHECK EVAP CANISTER PURGE VOLUME CONTROL SOLENOID VALVE OUTPUT SIGNAL CIRCUIT FOR OPEN AND SHORT

1. Turn ignition switch OFF.
2. Disconnect ECM harness connector.
3. Check harness continuity between ECM terminal 19 and EVAP canister purge volume control solenoid valve terminal 2. Refer to Wiring Diagram.

   Continuity should exist.

4. Also check harness for short to ground and short to power.

OK or NG

OK (With CONSULT-II)>>GO TO 7.
OK (Without CONSULT-II)>>GO TO 8.
NG >> Repair open circuit or short to ground and short to power in harness or connectors.

7. CHECK EVAP CANISTER PURGE VOLUME CONTROL SOLENOID VALVE OPERATION

With CONSULT-II

1. Reconnect all harness connectors disconnected.
2. Start engine.
3. Perform “PURG VOL CONT/V” in “ACTIVE TEST” mode with CONSULT-II. Check that engine speed varies according to the valve opening.

OK or NG

OK >> GO TO 9.
NG >> GO TO 8.

ACTIVE TEST	
PURG VOL CONT/V	XXX %
MONITOR	
ENG SPEED	XXX rpm
A/F ALPHA-B1	XXX %
HO2S1 MNTR (B1)	LEAN

PBIB0569E

8. CHECK EVAP CANISTER PURGE VOLUME CONTROL SOLENOID VALVE

Refer to EC-743, "Component Inspection" .

OK or NG

OK >> GO TO 9.
NG >> Replace EVAP canister purge volume control solenoid valve.

9. CHECK INTERMITTENT INCIDENT

Refer to EC-542, "TROUBLE DIAGNOSIS FOR INTERMITTENT INCIDENT" .

>> **INSPECTION END**

Component Inspection

BBS003CO

EVAP CANISTER PURGE VOLUME CONTROL SOLENOID VALVE

With CONSULT-II

Check air passage continuity of EVAP canister purge volume control solenoid valve under the following conditions.

Condition (PURG VOL CONT/V value)	Air passage continuity between A and B
100%	Yes
0%	No

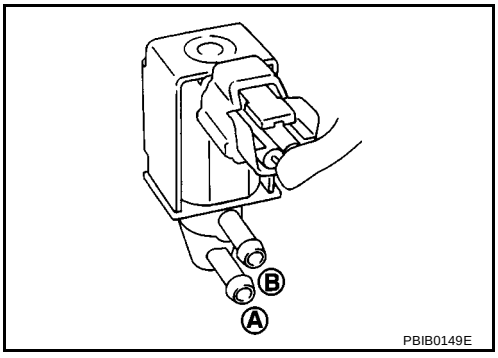

Without CONSULT-II

Check air passage continuity of EVAP canister purge volume control solenoid valve under the following conditions.

Condition	Air passage continuity between A and B
12V direct current supply between terminals 1 and 2	Yes
No supply	No

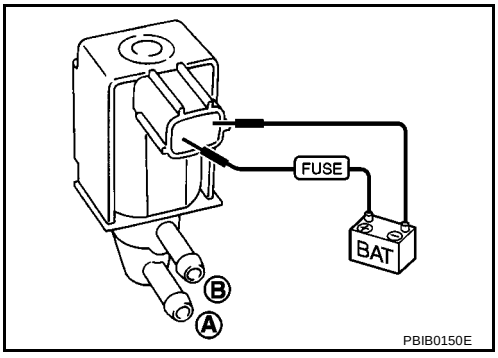

Removal and Installation

BBS003CP

EVAP CANISTER PURGE VOLUME CONTROL SOLENOID VALVE

Refer to EM-18, "AIR CLEANER AND AIR DUCT" .

FUEL INJECTOR

PFP:16600

Component Description

BBS003CS

The fuel injector is a small, precise solenoid valve. When the ECM supplies a ground to the fuel injector circuit, the coil in the fuel injector is energized. The energized coil pulls the ball valve back and allows fuel to flow through the fuel injector into the intake manifold. The amount of fuel injected depends upon the injection pulse duration. Pulse duration is the length of time the fuel injector remains open. The ECM controls the injection pulse duration based on engine fuel needs.

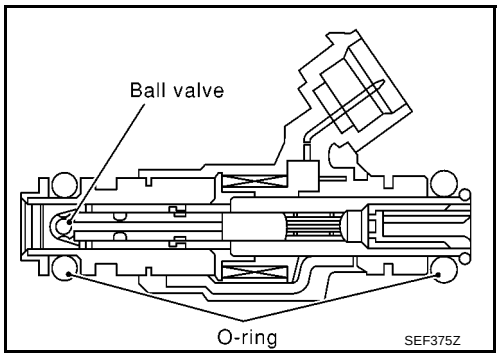

CONSULT-II Reference Value in Data Monitor Mode

BBS003CT

Specification data are reference values.

MONITOR ITEM	CONDITION		SPECIFICATION
B/FUEL SCHDL	● See EC-532, "TROUBLE DIAGNOSIS - SPECIFICATION VALUE" .		
INJ PULSE-B1	● Engine: After warming up ● Shift lever: Neutral ● Air conditioner switch: OFF ● No load	Idle	2.0 - 3.0 msec
		2,000 rpm	1.9 - 2.9 msec

Wiring Diagram

BBS003CU

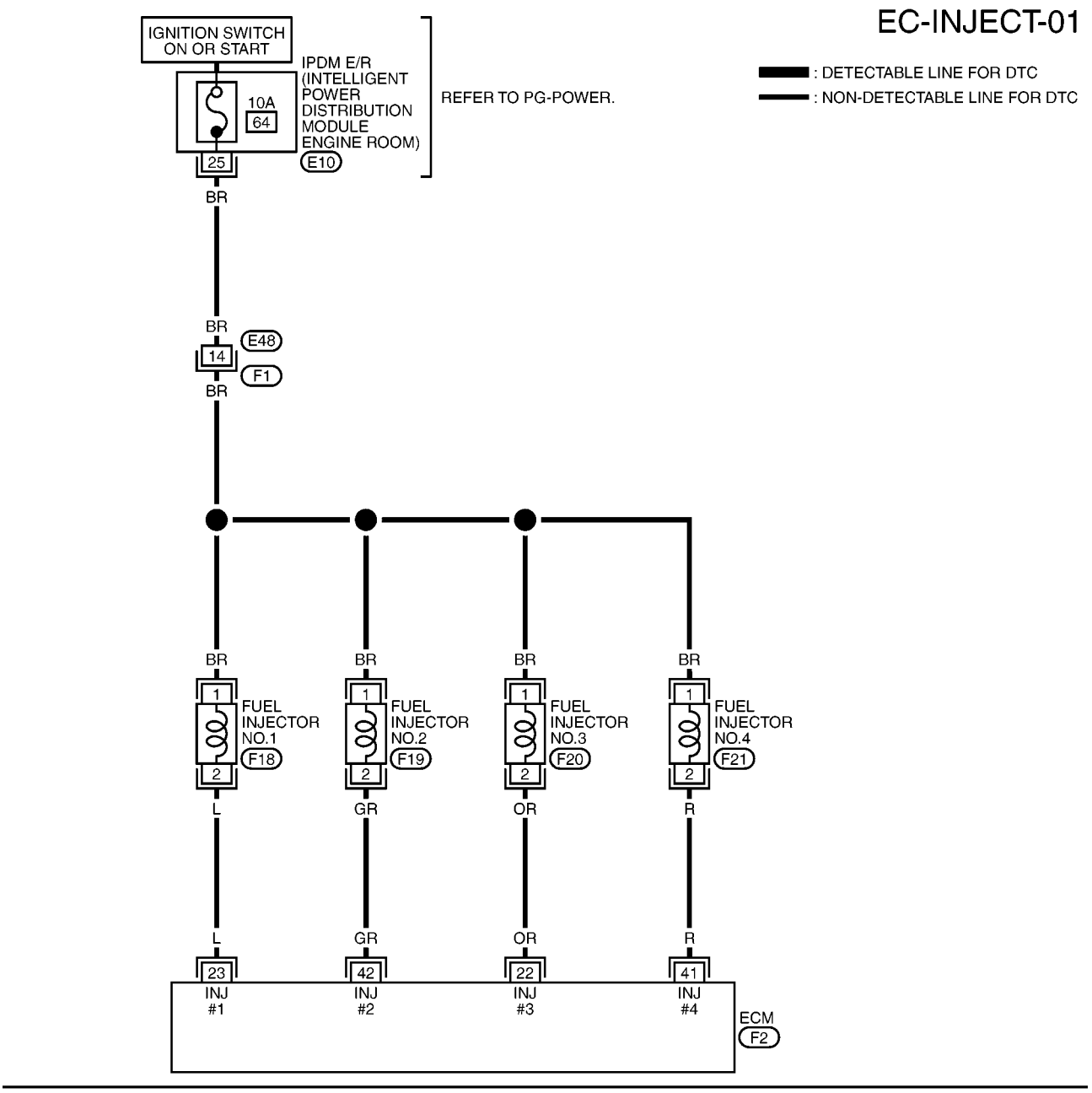

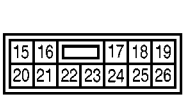

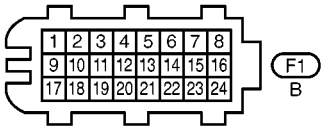

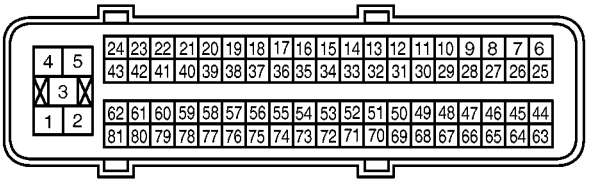

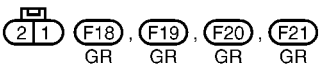

MBWA1538E

Specification data are reference values and are measured between each terminal and ground.
Pulse signal is measured by CONSULT-II.

CAUTION:
Do not use ECM ground terminals when measuring input/output voltage. Doing so may result in damage to the ECM's transistor. Use a ground other than ECM terminals, such as the ground.

TERMINAL NO.	WIRE COLOR	ITEM	CONDITION	DATA (DC Voltage)
22 23 41 42	O L R GR	Fuel injector No. 3 Fuel injector No. 1 Fuel injector No. 4 Fuel injector No. 2	**[Engine is running]** ● **Warm-up condition** ● Idle speed **NOTE:** The pulse cycle changes depending on rpm at idle.	BATTERY VOLTAGE (11 - 14V)★ 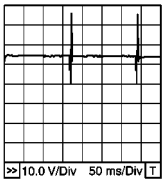 PBIB0529E
			[Engine is running] ● **Warm-up condition** ● Engine speed: 2,000 rpm	BATTERY VOLTAGE (11 - 14V)★ 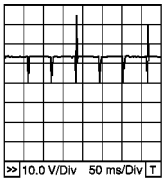 PBIB0530E

★: Average voltage for pulse signal (Actual pulse signal can be confirmed by oscilloscope.)

Diagnostic Procedure

BBS003CV

1. INSPECTION START

Turn ignition switch to START.
Is any cylinder ignited?

Yes or No

Yes >> GO TO 2.
No >> GO TO 3.

2. CHECK OVERALL FUNCTION

With CONSULT-II

1. Start engine.
2. Perform “POWER BALANCE” in “ACTIVE TEST” mode with CONSULT-II.
3. Make sure that each circuit produces a momentary engine speed drop.

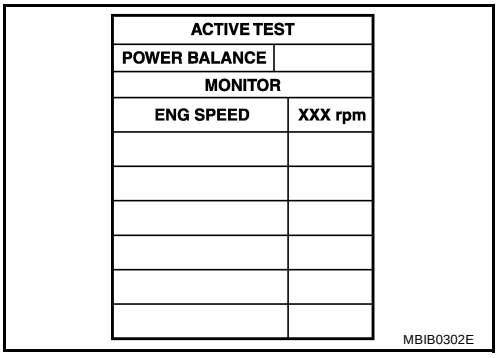

Without CONSULT-II

1. Start engine.
2. Listen to each fuel injector operating sound.
   Clicking noise should be heard.

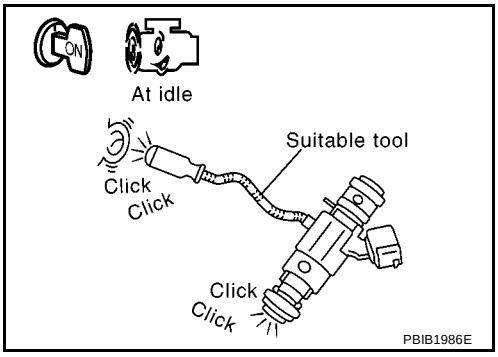

OK or NG

OK >> **INSPECTION END**
NG >> GO TO 3.

3. CHECK FUEL INJECTOR POWER SUPPLY CIRCUIT

1. Turn ignition switch OFF.
2. Disconnect fuel injector harness connector (1).
- ⇦: Vehicle front
3. Turn ignition switch ON.

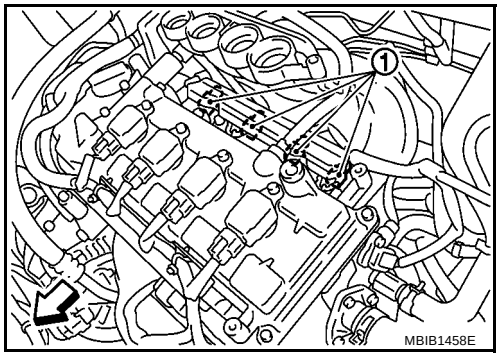

4. Check voltage between fuel injector terminal 1 and ground with CONSULT-II or tester.

Voltage: Battery voltage

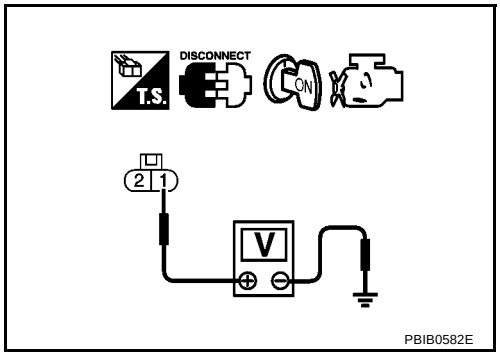

OK or NG

OK >> GO TO 5.
NG >> GO TO 4.

4. DETECT MALFUNCTIONING PART

Check the following.

- Harness connectors E48, F1
- 10A fuse
- Harness for open or short between fuel injector and fuse

>> Repair harness or connectors.

5. CHECK FUEL INJECTOR OUTPUT SIGNAL CIRCUIT FOR OPEN AND SHORT

1. Turn ignition switch OFF.
2. Disconnect ECM harness connector.
3. Check harness continuity between fuel injector terminal 2 and ECM terminals 22, 23, 41, 42. Refer to Wiring Diagram.

Continuity should exist.

4. Also check harness for short to ground and short to power.

OK or NG

OK >> GO TO 6.
NG >> Repair open circuit or short to ground or short to power in harness or connectors.

6. CHECK FUEL INJECTOR

Refer to EC-749, "Component Inspection" .

OK or NG

OK >> GO TO 7.
NG >> Replace fuel injector.

7. CHECK INTERMITTENT INCIDENT

Refer to EC-542, "TROUBLE DIAGNOSIS FOR INTERMITTENT INCIDENT" .

>> **INSPECTION END**

Component Inspection

BBS003CW

FUEL INJECTOR

1. Disconnect fuel injector harness connector.
2. Check resistance between terminals as shown in the figure.

Resistance: 10.4 - 15.3Ω [at 10 - 60°C (50 - 140°F)]

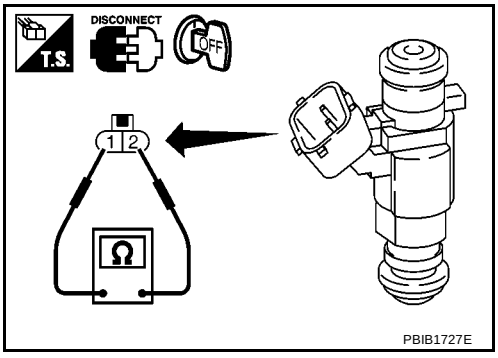

Removal and Installation

BBS003CX

FUEL INJECTOR

Refer to EM-32, "FUEL INJECTOR AND FUEL TUBE" .

FUEL PUMP

PFP:17042

Description

BBS003CY

SYSTEM DESCRIPTION

Sensor	Input Signal to ECM	ECM Function	Actuator
Crankshaft position sensor (POS) Camshaft position sensor (PHASE)	Engine speed*	Fuel pump control	Fuel pump relay
Battery	Battery voltage*		

*: ECM determines the start signal status by the signals of engine speed and battery voltage.

The ECM activates the fuel pump for several seconds after the ignition switch is turned on to improve engine startability. If the ECM receives a engine speed signal from the crankshaft position sensor (POS) and camshaft position sensor (PHASE), it knows that the engine is rotating, and causes the pump to operate. If the engine speed signal is not received when the ignition switch is ON, the engine stalls. The ECM stops pump operation and prevents battery discharging, thereby improving safety. The ECM does not directly drive the fuel pump. It controls the ON/OFF fuel pump relay, which in turn controls the fuel pump.

Condition	Fuel pump operation
Ignition switch is turned to ON.	Operates for 1 second.
Engine running and cranking	Operates.
When engine is stopped	Stops in 1.5 seconds.
Except as shown above	Stops.

COMPONENT DESCRIPTION

A turbine type design fuel pump is used in the fuel tank.

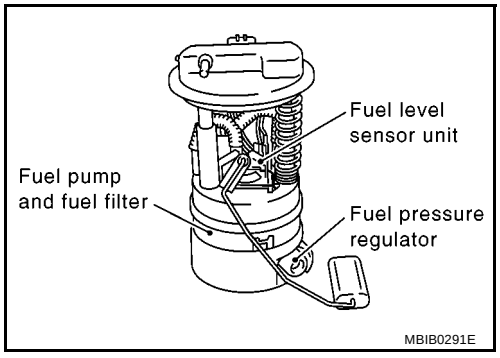

CONSULT-II Reference Value in Data Monitor Mode

BBS003CZ

Specification data are reference values.

MONITOR ITEM	CONDITION	SPECIFICATION
FUEL PUMP RLY	● For 1 second after turning ignition switch ON ● Engine running or cranking	ON
	● Except above conditions	OFF

Wiring Diagram

BBS003D0

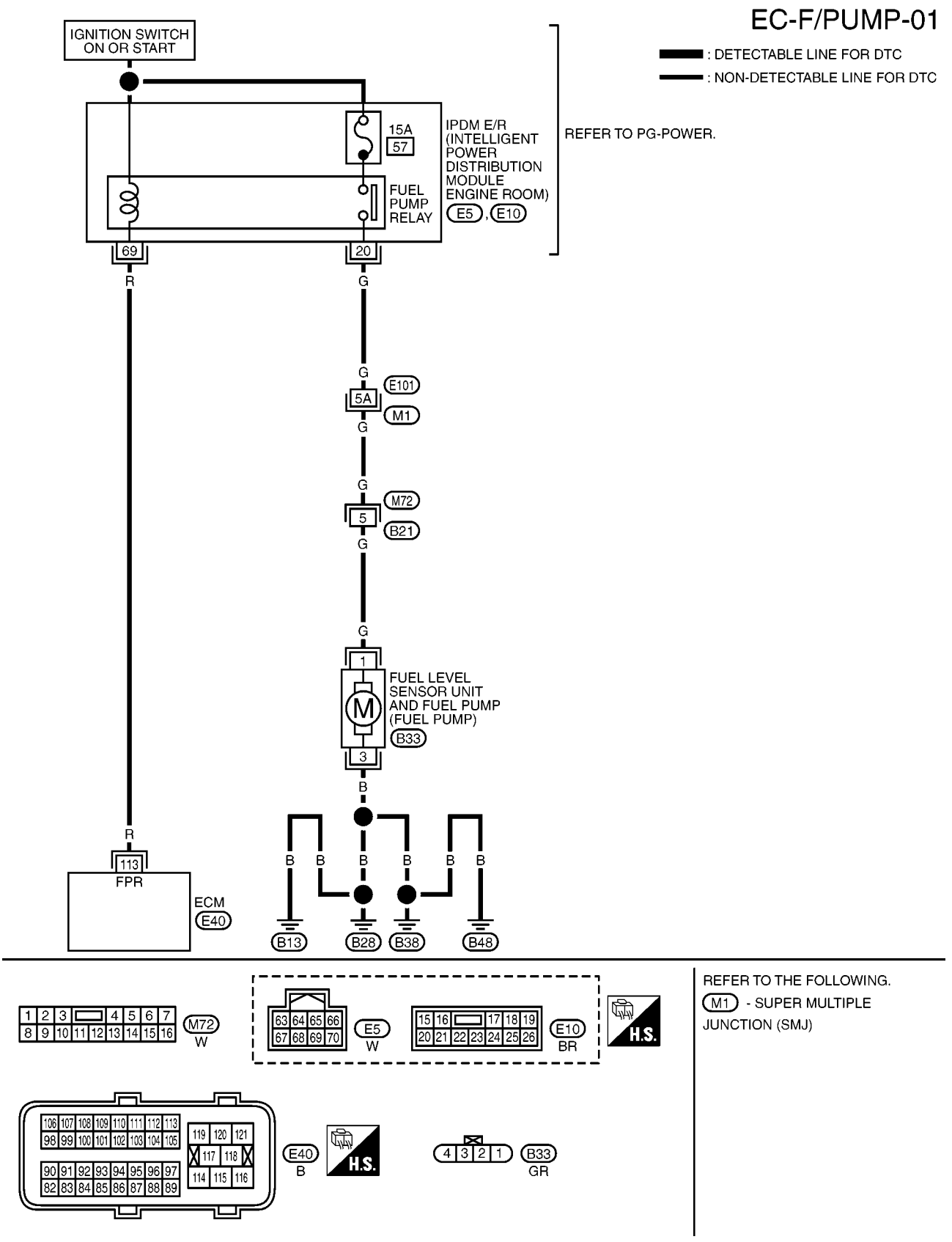

Specification data are reference values and are measured between each terminal and ground.

CAUTION:

Do not use ECM ground terminals when measuring input/output voltage. Doing so may result in damage to the ECM's transistor. Use a ground other than ECM terminals, such as the ground.

TERMINAL NO.	WIRE COLOR	ITEM	CONDITION	DATA (DC Voltage)
113	R	Fuel pump relay	**[Ignition switch: ON]** ● For 1 second after turning ignition switch ON **[Engine is running]**	0 - 1.0V
			[Ignition switch: ON] ● More than 1 second after turning ignition switch ON	BATTERY VOLTAGE (11 - 14V)

Diagnostic Procedure

BBS003D1

1. CHECK OVERALL FUNCTION

1. Turn ignition switch ON.
2. Pinch fuel feed hose (1) with two fingers.
   Fuel pressure pulsation should be felt on the fuel hose for 1 second after ignition switch is turned ON.

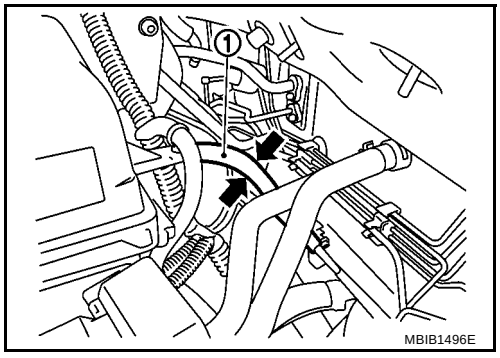

OK or NG

OK >> **INSPECTION END**
NG >> GO TO 2.

2. CHECK FUEL PUMP RELAY POWER SUPPLY CIRCUIT

1. Turn ignition switch OFF.
2. Disconnect ECM harness connector.
3. Turn ignition switch ON.
4. Check voltage between ECM terminals 113 and ground with CONSULT-II or tester.

   Voltage: Battery voltage

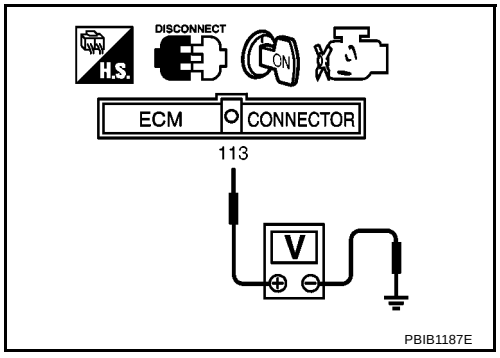

OK or NG

OK >> GO TO 5.
NG >> GO TO 3.

3. CHECK FUEL PUMP POWER SUPPLY CIRCUIT-I

Check voltage between IPDM E/R terminal 69 and ground with CONSULT-II or tester.

Voltage: Battery voltage

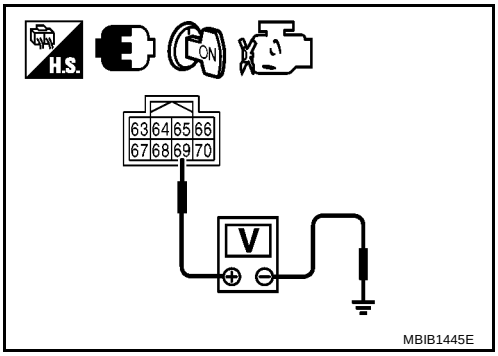

OK or NG

OK >> GO TO 4.
NG >> GO TO 11.

4. DETECT MALFUNCTIONING PART

Check harness for open or short between IPDM E/R and ECM

>> Repair harness or connectors.

5. CHECK FUEL PUMP POWER SUPPLY CIRCUIT-I

1. Turn ignition switch OFF.
2. Reconnect all harness connectors disconnected.
3. Disconnect “fuel level sensor unit and fuel pump” harness connector.
4. Turn ignition switch ON.

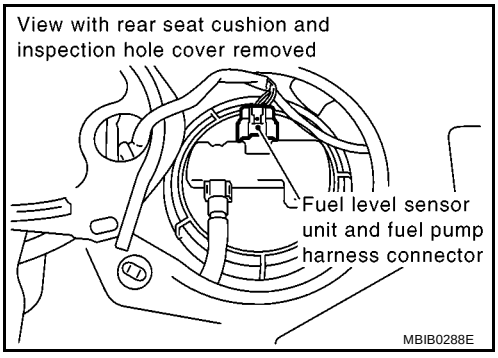

5. Check voltage between “Fuel level sensor unit and fuel pump” terminal 1 and ground with CONSULT-II or tester.

Voltage: Battery voltage should exist for 1 second after ignition switch is turned ON.

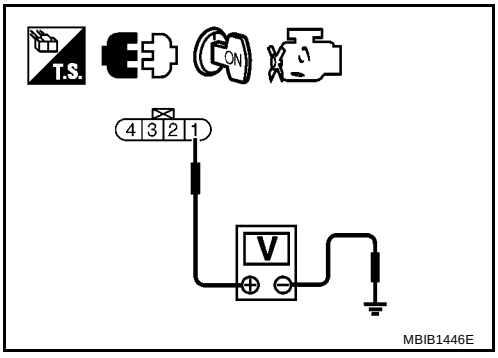

OK or NG

OK >> GO TO 9.
NG >> GO TO 6.

6. CHECK 15A FUSE

1. Turn ignition switch OFF.
2. Disconnect 15A fuse.
3. Check 15A fuse.

OK or NG

OK >> GO TO 7.
NG >> Replace fuse.

7. CHECK FUEL PUMP POWER SUPPLY CIRCUIT-II

1. Disconnect IPDM E/R harness connector E10.
2. Check harness continuity between IPDM E/R terminal 20 and “fuel level sensor unit and fuel pump” terminal 1. Refer to Wiring Diagram.

   Continuity should exist.

3. Also check harness for short to ground and short to power.

OK or NG

OK >> GO TO 11.
NG >> GO TO 8.

8. DETECT MALFUNCTIONING PART

Check the following.

- Harness connectors E101, M1
- Harness connectors M72, B21
- Harness for open or short between “fuel level sensor unit and fuel pump” and IPDM E/R

>> Repair open circuit or short to ground or short to power in harness or connectors.

9. CHECK FUEL PUMP GROUND CIRCUIT FOR OPEN AND SHORT

1. Turn ignition switch OFF.
2. Check harness continuity between “fuel level sensor unit and fuel pump” terminal 3 and ground. Refer to Wiring Diagram.

   Continuity should exist.

3. Also check harness for short to power.

OK or NG

OK >> GO TO 10.
NG >> Repair open circuit or short to power in harness or connectors.

10. CHECK FUEL PUMP

Refer to EC-754, "Component Inspection" .

OK or NG

OK >> GO TO 11.
NG >> Replace “fuel level sensor unit and fuel pump”.

11. CHECK INTERMITTENT INCIDENT

Refer to EC-542, "TROUBLE DIAGNOSIS FOR INTERMITTENT INCIDENT" .

OK or NG

OK >> Replace IPDM E/R. Refer to PG-18, "IPDM E/R (INTELLIGENT POWER DISTRIBUTION MODULE ENGINE ROOM)" .
NG >> Repair or replace harness or connector.
>> **INSPECTION END**

Component Inspection

BBS003D2

FUEL PUMP

1. Disconnect “fuel level sensor unit and fuel pump” harness connector.

2. Check resistance between “fuel level sensor unit and fuel pump” terminals 1 and 3.

Resistance: Approximately 0.2 - 5.0Ω [at 25°C (77°F)]

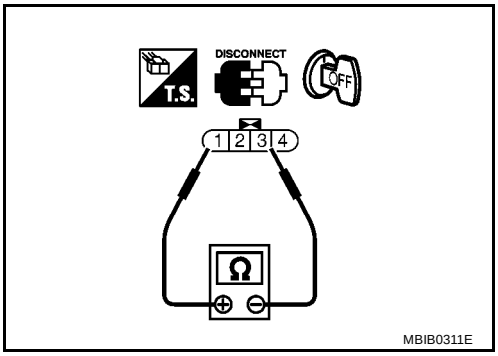

Removal and Installation

BBS003D3

FUEL PUMP

Refer to FL-4, "FUEL LEVEL SENSOR UNIT, FUEL FILTER AND FUEL PUMP ASSEMBLY" .

HO2S1

PFP:22690

Component Description

BBS003C3

The heated oxygen sensor 1 is placed into the exhaust manifold. It detects the amount of oxygen in the exhaust gas compared to the outside air. The heated oxygen sensor 1 has a closed-end tube made of ceramic zirconia. The zirconia generates voltage from approximately 1V in richer conditions to 0V in leaner conditions. The heated oxygen sensor 1 signal is sent to the ECM. The ECM adjusts the injection pulse duration to achieve the ideal air-fuel ratio. The ideal air-fuel ratio occurs near the radical change from 1V to 0V.

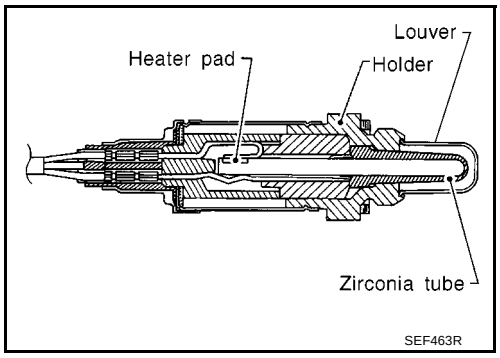

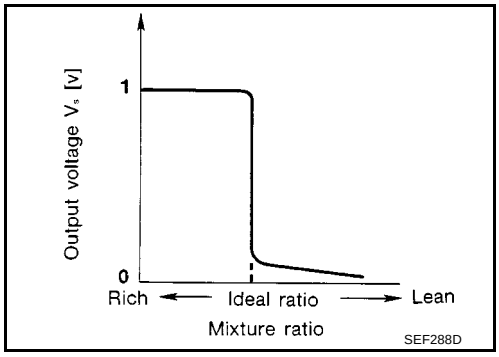

CONSULT-II Reference Value in Data Monitor Mode

BBS003C4

Specification data are reference values.

MONITOR ITEM	CONDITION		SPECIFICATION
HO2S1 (B1)	● Engine: After warming up	Maintaining engine speed at 2,000 rpm	0 - 0.3V ←→ Approx. 0.6 - 1.0V
HO2S1 MNTR (B1)			LEAN ←→ RICH Changes more than 5 times during 10 seconds.

Wiring Diagram

BBS003C5

EC-FRO2-01

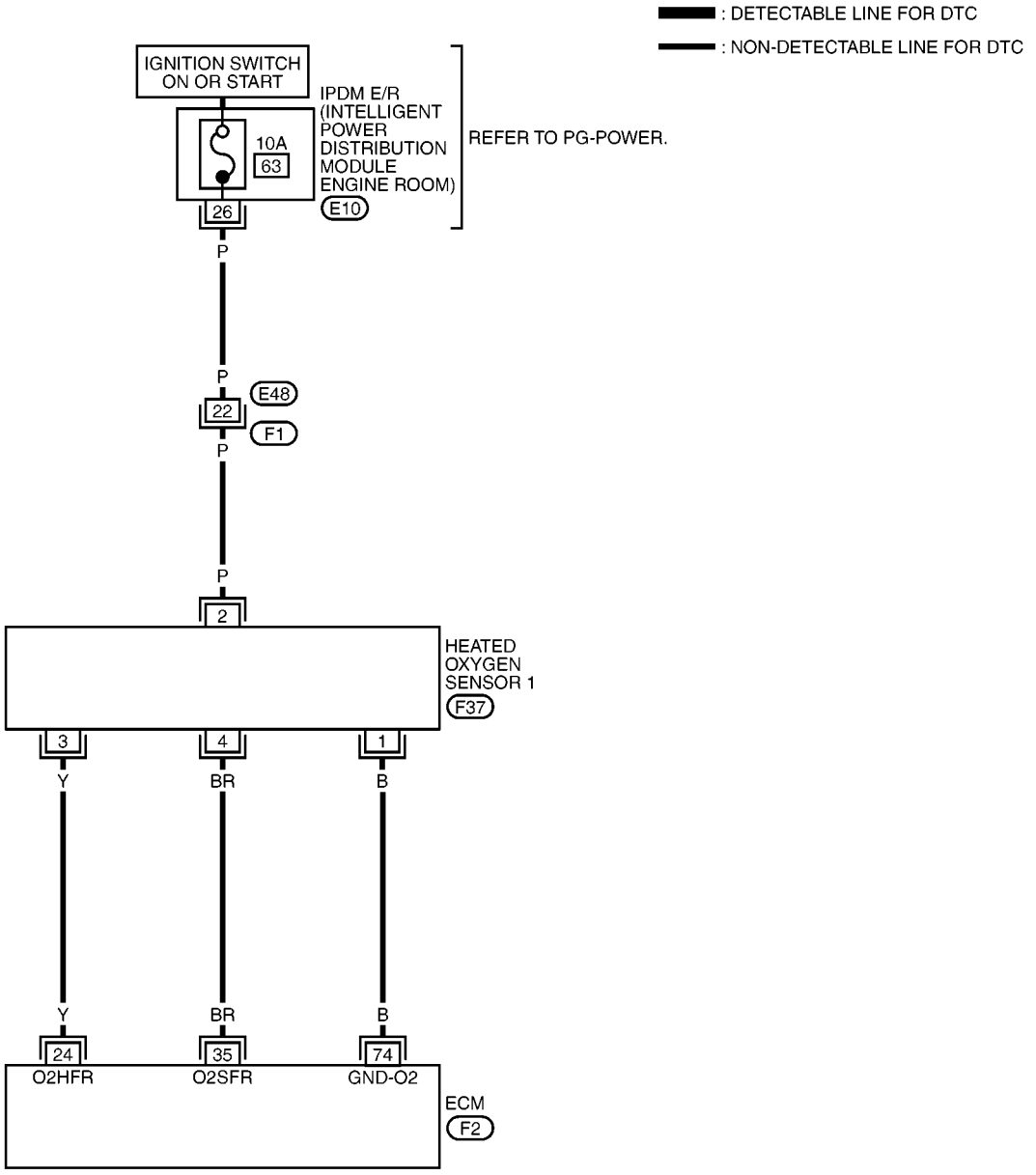

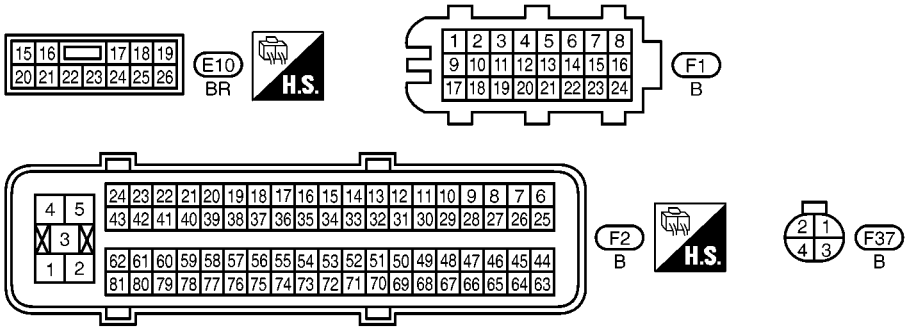

MBWA1542E

Specification data are reference values and are measured between each terminal and ground.
Pulse signal is measured by CONSULT-II.

CAUTION:

Do not use ECM ground terminals when measuring input/output voltage. Doing so may result in damage to the ECM's transistor. Use a ground other than ECM terminals, such as the ground.

TERMINAL NO.	WIRE COLOR	ITEM	CONDITION	DATA (DC Voltage)
24	Y	Heated oxygen sensor 1 heater	**[Engine is running]** ● **Warm-up condition** ● Engine speed: Below 3,600 rpm	Approximately 7.0V★ 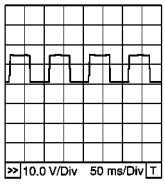 PBIB0519E
			[Engine is running] ● Engine speed: Above 3,600 rpm	BATTERY VOLTAGE (11 - 14V)
35	BR	Heated oxygen sensor 1	**[Engine is running]** ● **Warm-up condition** ● Engine speed: 2,000 rpm	0 - Approximately 1.0V (Periodically change)
74	B	Sensor ground (Heated oxygen sensor)	**[Engine is running]** ● **Warm-up condition** ● Idle speed	Approximately 0V

★: Average voltage for pulse signal (Actual pulse signal can be confirmed by oscilloscope.)

Diagnostic Procedure

BBS003C6

1. CHECK OVERALL FUNCTION

With CONSULT-II

1. Start engine and warm it up to normal operating temperature.
2. Select “HO2S1 MNTR (B1)” in “DATA MONITOR” mode with CONSULT-II.
3. Keep the engine speed at 2,000 rpm under no load, and make sure that the monitors fluctuates between LEAN and RICH more than 5 times in 10 seconds.

   1 time: RICH → LEAN → RICH

   2 times: RICH → LEAN → RICH → LEAN →RICH

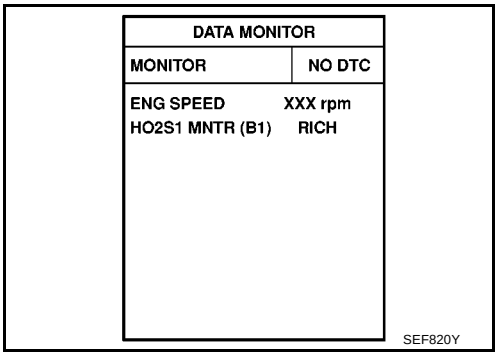

Without CONSULT-II

1. Start engine and warm it up to normal operating temperature.
2. Stop engine and wait at least 10 seconds.
3. Set ECM in Diagnostic test mode - II (Heated oxygen sensor 1 monitor).
   Refer to EC-480, "HOW TO SWITCH DIAGNOSTIC TEST MODE" .
4. Keep the engine speed at 2,000 rpm under no load, and make sure that the MI comes ON more than 5 times in 10 seconds.

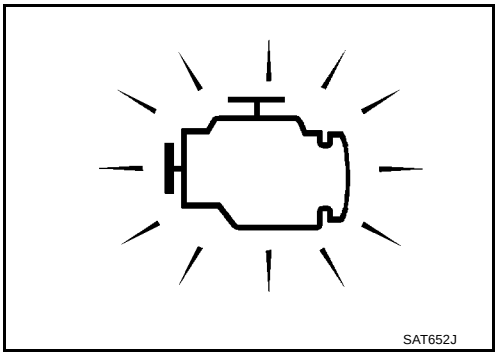

OK or NG

OK >> **INSPECTION END**
NG >> GO TO 2.

2. CHECK GROUND CONNECTIONS

1. Turn ignition switch OFF.
2. Loosen and retighten ground screws on the body.
   Refer to EC-548, "Ground Inspection" .

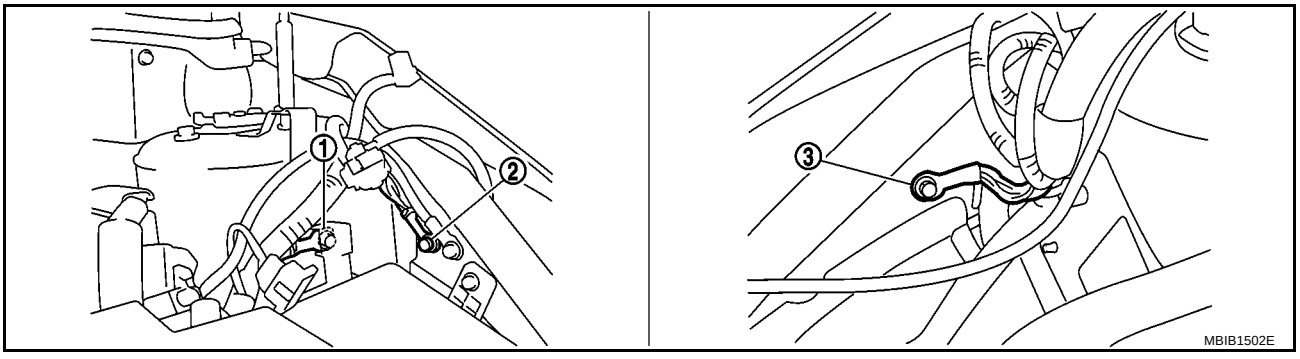

1. Body ground E44
2. Body ground E45
3. Body ground E28

OK or NG

OK >> GO TO 3.
NG >> Repair or replace ground connections.

3. CHECK HO2S1 GROUND CIRCUIT FOR OPEN AND SHORT

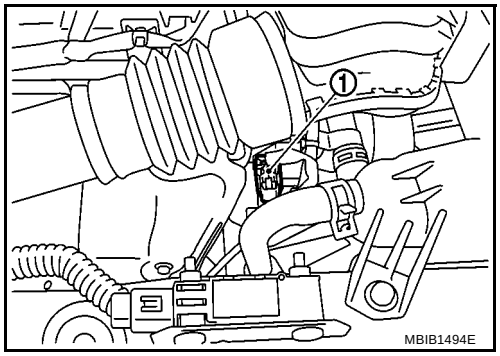

1. Disconnect heated oxygen sensor 1 harness connector (1).
2. Disconnect ECM harness connector.
3. Check harness continuity between ECM terminal 74 and HO2S1 terminal 1.
   Refer to Wiring Diagram.

   Continuity should exist.

4. Also check harness for short to ground and short to power.

OK or NG

OK >> GO TO 4.
NG >> Repair open circuit or short to ground or short to power in harness or connectors.

4. CHECK HO2S1 INPUT SIGNAL CIRCUIT FOR OPEN AND SHORT

1. Check harness continuity between ECM terminal 35 and HO2S1 terminal 4.
   Refer to Wiring Diagram.

   Continuity should exist.

2. Check harness continuity between ECM terminal 35 or HO2S1 terminal 4 and ground.
   Refer to Wiring Diagram.

   Continuity should not exist.

3. Also check harness for short to power.

OK or NG

OK >> GO TO 5.
NG >> Repair open circuit or short to ground or short to power in harness or connectors.

5. CHECK HEATED OXYGEN SENSOR 1

Refer to EC-760, "Component Inspection" .

OK or NG

OK >> GO TO 6.
NG >> Replace heated oxygen sensor 1.

6. CHECK INTERMITTENT INCIDENT

Refer to EC-542, "TROUBLE DIAGNOSIS FOR INTERMITTENT INCIDENT" .

>> **INSPECTION END**

Component Inspection

BBS003C7

HEATED OXYGEN SENSOR 1

With CONSULT-II

1. Start engine and warm it up to normal operating temperature.
2. Select “MANU TRIG” and adjust “TRIGGER POINT” to 100% in “DATA MONITOR” mode with CONSULT-II.

3. Select “HO2S1 (B1)” and “HO2S1 MNTR (B1)”.
4. Hold engine speed at 2,000 rpm under no load during the following steps.
5. Touch “RECORD” on CONSULT-II screen.

DATA MONITOR	
MONITOR	NO DTC
ENG SPEED	XXX rpm
COOLAN TEMP/S	XXX °C
HO2S1 (B1)	XXX V
HO2S1 MNTR (B1)	LEAN

MBIB0301E

6. Check the following.
   - “HO2S1 MNTR (B1)” in “DATA MONITOR” mode changes from “RICH” to “LEAN” to “RICH” more than 5 times in 10 seconds.
     5 times (cycles) are counted as shown in the figure.
   - “HO2S1 (B1)” voltage goes above 0.6V at least once.
   - “HO2S1 (B1)” voltage goes below 0.3V at least once.
   - “HO2S1 (B1)” voltage never exceeds 1.0V.

cycle	1	2	3	4	5
HO2S1 MNTR (B1)	R-L-R-L-R-L-R-L-R-L-R				

R means HO2S1 MNTR (B1) indicates RICH
L means HO2S1 MNTR (B1) indicates LEAN

SEF217YA

Trigger	ENG SPEED	HO2S1 (B1)
	rpm	V
XXX	XXX	XXX
XXX	XXX	XXX
XXX	XXX	XXX
XXX	XXX	XXX
XXX	XXX	XXX
XXX	XXX	XXX
XXX	XXX	XXX
XXX	XXX	XXX
XXX	XXX	XXX
XXX	XXX	XXX
XXX	XXX	XXX
XXX	XXX	XXX

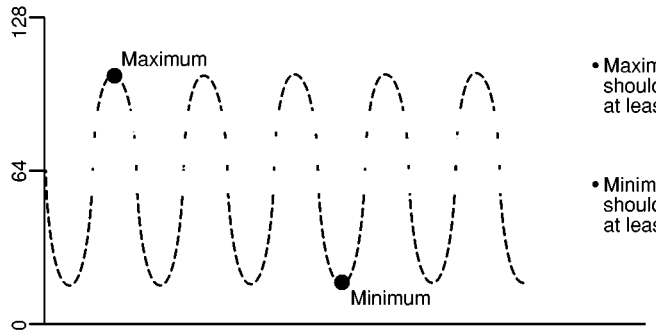

- Maximum voltage should be over 0.6V at least one time.
- Minimum voltage should be below 0.30V at least one time.

SEF648Y

CAUTION:
- **Discard any heated oxygen sensor which has been dropped from a height of more than 0.5 m (19.7 in) onto a hard surface such as a concrete floor; use a new one.**
- **Before installing new oxygen sensor, clean exhaust system threads using Oxygen Sensor Thread Cleaner and approved anti-seize lubricant.**

Without CONSULT-II

1. Start engine and warm it up to normal operating temperature.
2. Set voltmeter probes between ECM terminal 35 [HO2S1 (B1) signal] and ground.
3. Check the following with engine speed held at 2,000 rpm constant under no load.
   - The voltage fluctuates between 0 to 0.3V and 0.6 to 1.0V more than 5 times within 10 seconds.
   - The maximum voltage is over 0.6V at least one time.
   - The minimum voltage is below 0.3V at least one time.
   - The voltage never exceeds 1.0V.

   1 time: 0 - 0.3V → 0.6 - 1.0V → 0 - 0.3V
   2 times: 0 - 0.3V → 0.6 - 1.0V → 0 - 0.3V → 0.6 - 1.0V → 0 - 0.3V

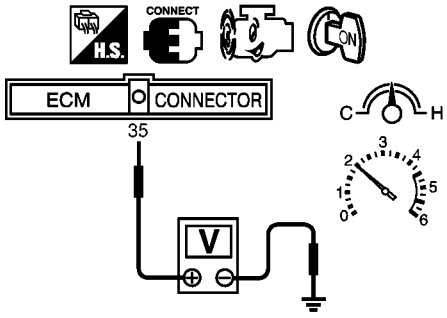

MBIB0018E

CAUTION:
- **Discard any heated oxygen sensor which has been dropped from a height of more than 0.5 m (19.7 in) onto a hard surface such as a concrete floor; use a new one.**

- **Before installing new oxygen sensor, clean exhaust system threads using Oxygen Sensor Thread Cleaner and approved anti-seize lubricant.**

Removal and Installation

BBS003C8

HEATED OXYGEN SENSOR 1

Refer to EM-24, "EXHAUST MANIFOLD AND THREE WAY CATALYST" .

HO2S1 HEATER

PFP:22690

Description

BBS003BM

SYSTEM DESCRIPTION

Sensor	Input Signal to ECM	ECM Function	Actuator
Camshaft position sensor (PHASE) Crankshaft position sensor (POS)	Engine speed	Heated oxygen sensor 1 heater control	Heated oxygen sensor 1 heater
Engine coolant temperature sensor	Engine coolant temperature		

The ECM performs ON/OFF duty control of the heated oxygen sensor 1 heater corresponding to the engine speed and engine coolant temperature. The duty percent varies with engine coolant temperature when engine is started.

OPERATION

Engine speed rpm	Heated oxygen sensor 1 heater
Above 3,600	OFF
Below 3,600 after warming up	ON

CONSULT-II Reference Value in Data Monitor Mode

BBS003BN

Specification data are reference values.

MONITOR ITEM	CONDITION	SPECIFICATION
HO2S1 HTR (B1)	● Engine: After warming up ● Engine speed: Below 3,600 rpm	ON
	● Engine speed: Above 3,600 rpm	OFF

Wiring Diagram

BBS003BO

EC-FRO2-01

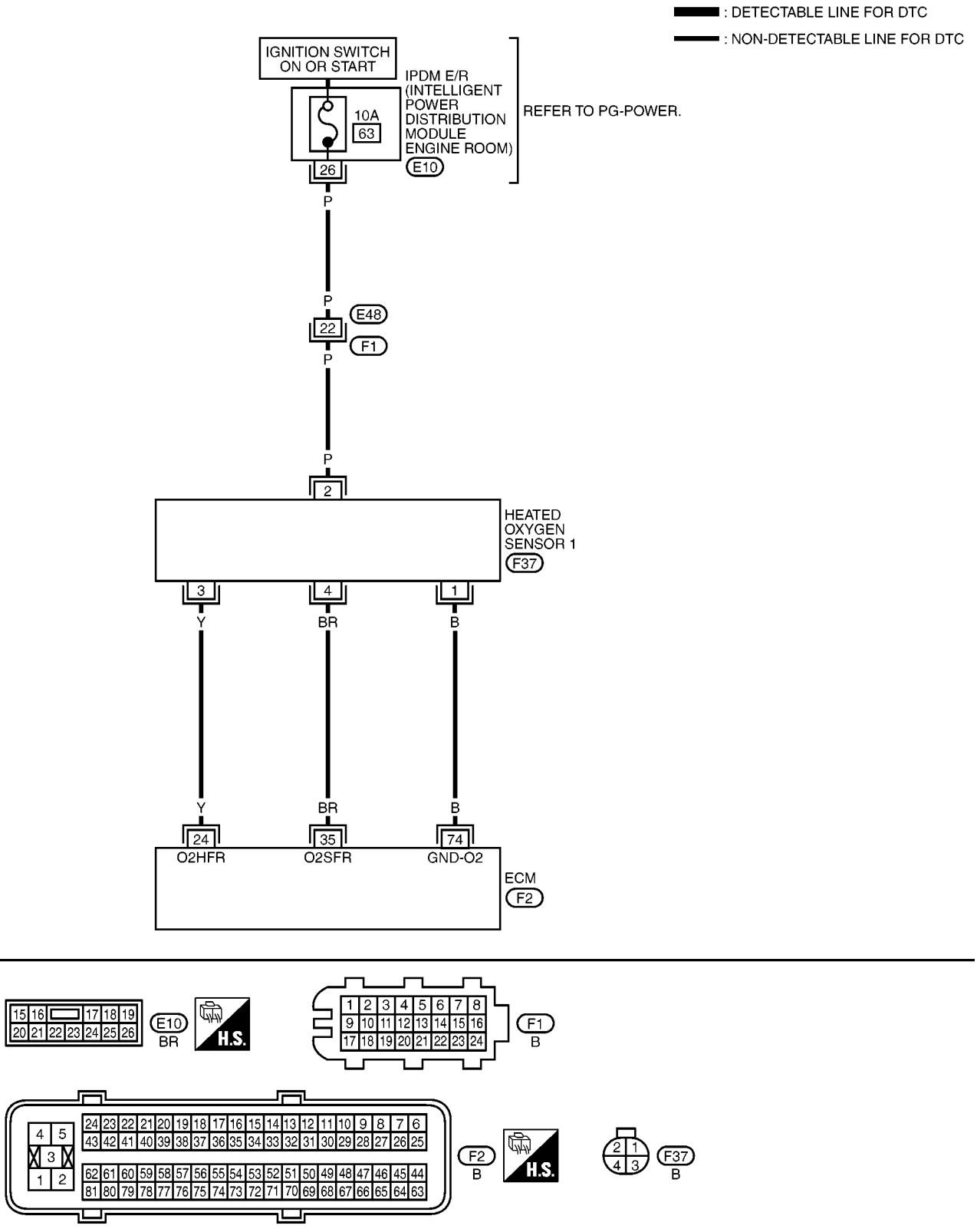

MBWA1542E

Specification data are reference values and are measured between each terminal and ground.
Pulse signal is measured by CONSULT-II.

CAUTION:
Do not use ECM ground terminals when measuring input/output voltage. Doing so may result in damage to the ECM's transistor. Use a ground other than ECM terminals, such as the ground.

TERMINAL NO.	WIRE COLOR	ITEM	CONDITION	DATA (DC Voltage)
24	Y	Heated oxygen sensor 1 heater	**[Engine is running]** ● **Warm-up condition** ● Engine speed: Below 3,600 rpm	Approximately 7.0V★ 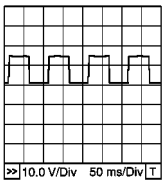 PBIB0519E
			[Engine is running] ● Engine speed: Above 3,600 rpm	BATTERY VOLTAGE (11 - 14V)
35	BR	Heated oxygen sensor 1	**[Engine is running]** ● **Warm-up condition** ● Engine speed: 2,000 rpm	0 - Approximately 1.0V (Periodically change)
74	B	Sensor ground (Heated oxygen sensor)	**[Engine is running]** ● **Warm-up condition** ● Idle speed	Approximately 0V

★: Average voltage for pulse signal (Actual pulse signal can be confirmed by oscilloscope.)

Diagnostic Procedure

BBS003BP

1. CHECK OVERALL FUNCTION

1. Start engine and warm it up to normal operating temperature.
2. Turn ignition switch OFF and wait at least 10 seconds.
3. Turn ignition switch ON.
4. Set tester prove between ECM terminal 24 (HO2S1 heater signal) and ground.
5. Start engine and let it idle.
6. Check the voltage under the following conditions.
   Verify that the oscilloscope screen shows the signal waves as shown below.

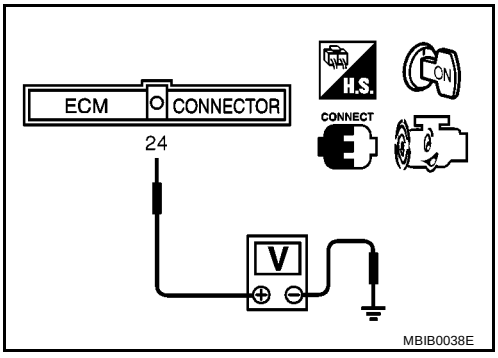

Conditions	Voltage
At idle	Approximately 7.0V★ 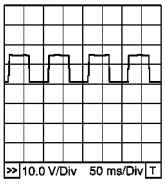 PBIB0519E
Engine speed: Above 3,600 rpm	BATTERY VOLTAGE (11 - 14V)

★: Average voltage for pulse signal (Actual pulse signal can be confirmed by oscilloscope.)

OK or NG

OK >> **INSPECTION END**
NG >> GO TO 2.

2. CHECK GROUND CONNECTIONS

1. Turn ignition switch OFF.
2. Loosen and retighten ground screws on the body.
   Refer to EC-548, "Ground Inspection" .

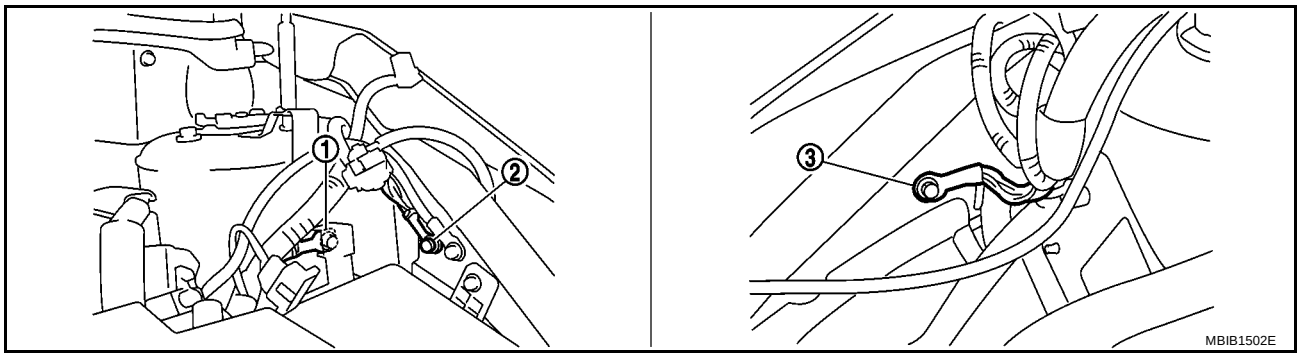

1. Body ground E44
2. Body ground E45
3. Body ground E28

OK or NG

OK >> GO TO 3.
NG >> Repair or replace ground connections.

3. CHECK HO2S1 POWER SUPPLY CIRCUIT

1. Disconnect heated oxygen sensor 1 harness connector (1).
2. Turn ignition switch ON.

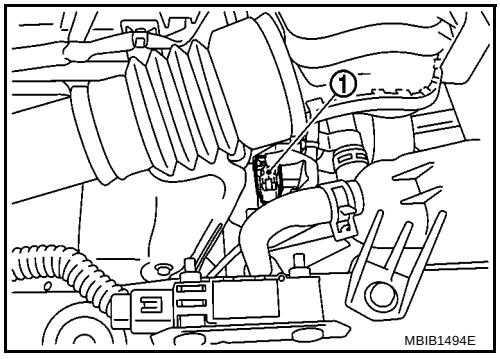

3. Check voltage between HO2S1 terminal 2 and ground with CONSULT-II or tester.

   Voltage: Battery voltage

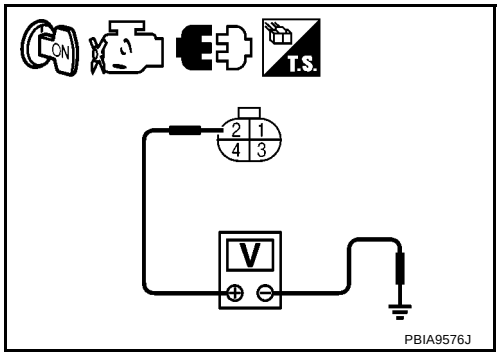

OK or NG

OK >> GO TO 5.
NG >> GO TO 4.

4. DETECT MALFUNCTIONING PART

Check the following.

- Harness connectors E48, F1
- IPDM E/R connector E10
- 10A fuse
- Harness for open or short between heated oxygen sensor 1 and fuse

>> Repair harness or connectors.

5. CHECK HO2S1 OUTPUT SIGNAL CIRCUIT FOR OPEN AND SHORT

1. Turn ignition switch OFF.
2. Disconnect ECM harness connector.
3. Check harness continuity between ECM terminal 24 and HO2S1 terminal 3.
   Refer to Wiring Diagram.

   Continuity should exist.

4. Also check harness for short to ground and short to power.

OK or NG

OK >> GO TO 6.
NG >> Repair open circuit or short to ground or short to power in harness or connectors.

6. CHECK HEATED OXYGEN SENSOR 1 HEATER

Refer to EC-767, "Component Inspection" .

OK or NG

OK >> GO TO 7.
NG >> Replace heated oxygen sensor 1.

7. CHECK INTERMITTENT INCIDENT

Refer to EC-542, "TROUBLE DIAGNOSIS FOR INTERMITTENT INCIDENT" .

>> **INSPECTION END**

Component Inspection

BBS003BQ

HEATED OXYGEN SENSOR 1 HEATER

1. Check resistance between HO2S1 terminals as follows.

Terminal No.	Resistance
2 and 3	3.3 - 4.4 Ω at 25°C (77°F)
1 and 2, 3, 4	∞ Ω (Continuity should not exist)
4 and 1, 2, 3	

2. If NG, replace heated oxygen sensor 1.

CAUTION:

- **Discard any heated oxygen sensor which has been dropped from a height of more than 0.5 m (19.7 in) onto a hard surface such as a concrete floor; use a new one.**
- **Before installing new oxygen sensor, clean exhaust system threads using Oxygen Sensor Thread Cleaner and approved anti-seize lubricant.**

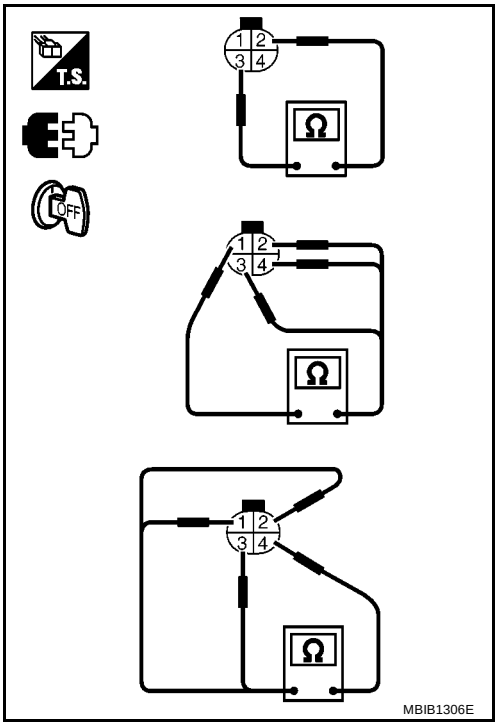

Removal and Installation

BBS003BR

HEATED OXYGEN SENSOR 1

Refer to EM-24, "EXHAUST MANIFOLD AND THREE WAY CATALYST" .

HO2S2

PFP:226A0

Component Description

BBS003C9

The heated oxygen sensor 2, after three way catalyst (manifold), monitors the oxygen level in the exhaust gas on each bank.
Even if switching characteristics of the heated oxygen sensor 1 are shifted, the air fuel ratio is controlled to stoichiometric, by the signal from the heated oxygen sensor 2.
This sensor is made of ceramic zirconia. The zirconia generates voltage from approximately 1V in richer conditions to 0V in leaner conditions.
Under normal conditions the heated oxygen sensor 2 is not used for engine control operation.

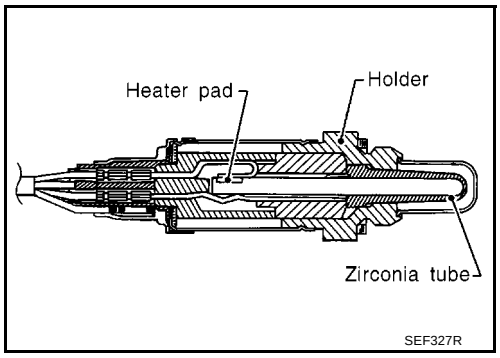

CONSULT-II Reference Value in Data Monitor Mode

BBS003CA

Specification data are reference values.

MONITOR ITEM	CONDITION	SPECIFICATION
HO2S2 (B1)	● Revving engine from idle to 3,000 rpm quickly after the following conditions are met. – Engine: After warning up – Keeping the engine speed between 3,500 and 4,000 rpm for 1 minute and at idle for 1 minute under no load.	0 - 0.3V ←→ Approx. 0.6 - 1.0V
HO2S2 MNTR (B1)		LEAN ←→ RICH

Wiring Diagram

BBS003CB

EC-RRO2-01

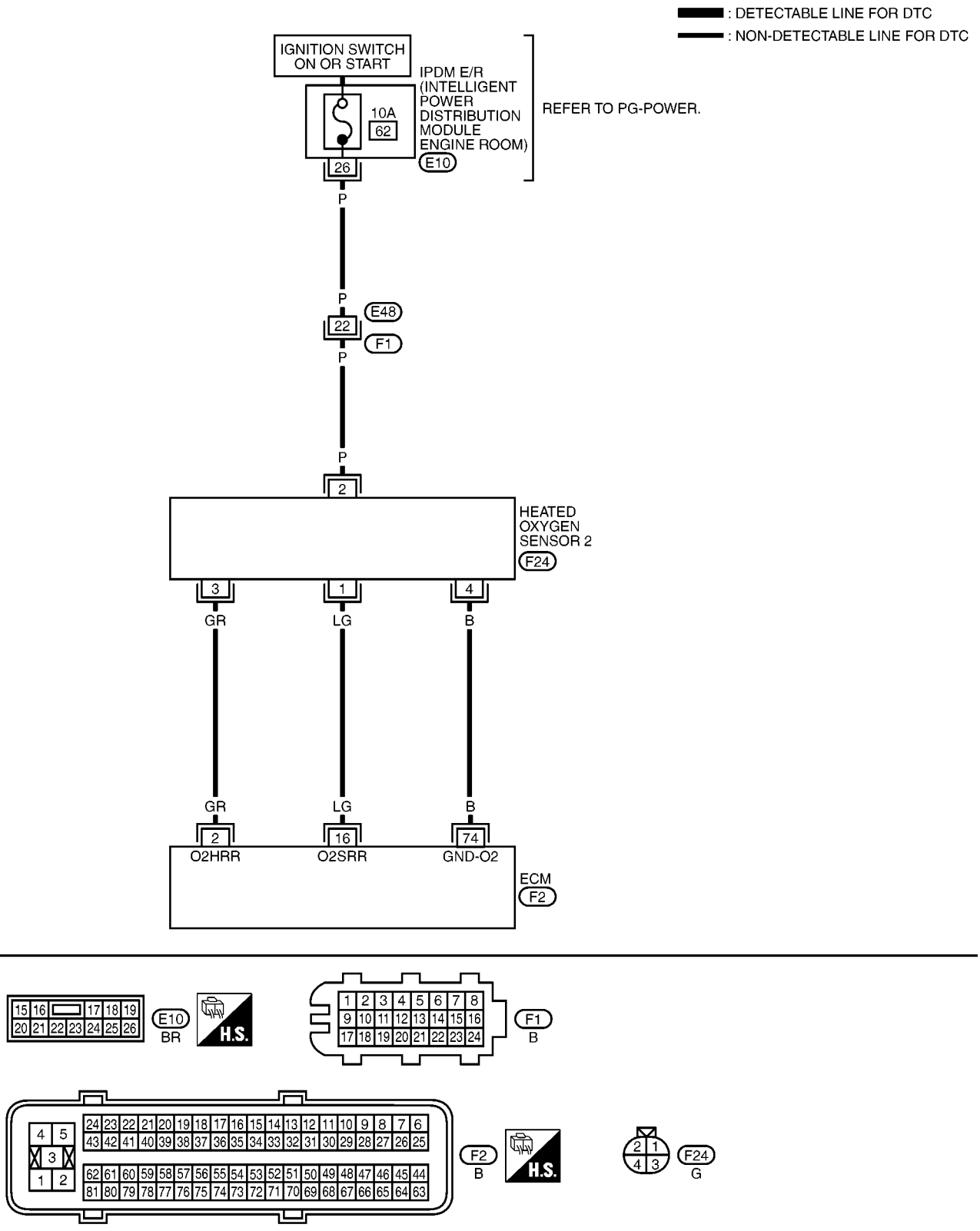

Specification data are reference values and are measured between each terminal and ground.

CAUTION:

Do not use ECM ground terminals when measuring input/output voltage. Doing so may result in damage to the ECM's transistor. Use a ground other than ECM terminals, such as the ground.

TERMINAL NO.	WIRE COLOR	ITEM	CONDITION	DATA (DC Voltage)
2	GR	Heated oxygen sensor 2 heater	**[Engine is running]** ● Engine speed: Below 3,800 rpm after the following conditions are met. – Engine: After warming up – Keeping the engine speed between 3,500 and 4,000 rpm for 1 minute and at idle for 1 minute under no load.	0 - 1.0V
			[Ignition switch: ON] ● Engine stopped **[Engine is running]** ● Engine speed: Above 3,800 rpm	BATTERY VOLTAGE (11 - 14V)
16	LG	Heated oxygen sensor 2	**[Engine is running]** ● Revving engine from idle to 3,000rpm quickly after the following conditions are met. – Engine: After warming up – Keeping the engine speed between 3,500 and 4,000 rpm for 1 minute and at idle for 1 minute under no load.	0 - Approximately 1.0V
74	B	Sensor ground (Heated oxygen sensor)	**[Engine is running]** ● **Warm-up condition** ● Idle speed	Approximately 0V

Diagnostic Procedure

BBS003CC

1. CHECK OVERALL FUNCTION-I

1. Start engine and warm it up to the normal operating temperature.
2. Turn ignition switch OFF and wait at least 10 seconds.
3. Start engine and keep the engine speed between 3,500 and 4,000 rpm for at least 1 minute under no load.
4. Let engine idle for 1 minute.
5. Set voltmeter probes between ECM terminal 16 (HO2S2 signal) and ground.
6. Check the voltage while revving up to 4,000 rpm under no load at least 10 times. (Depress and release the accelerator pedal as quickly as possible.)

The voltage does not remain in the range of 0.2 - 0.4V

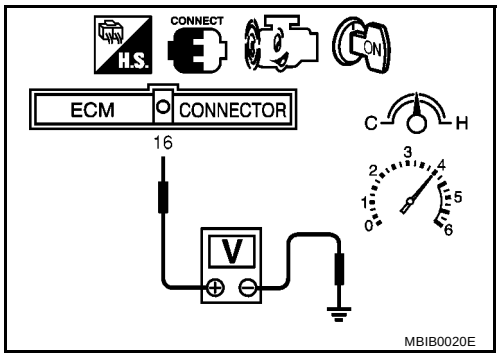

OK or NG

OK >> **INSPECTION END**
NG >> GO TO 2.

2. CHECK OVERALL FUNCTION-II

Keep engine at idle for 10 minutes, then check the voltage between ECM terminal 16 and ground, or check voltage when coasting 80 km/h (50 MPH) in 3rd gear position.

The voltage does not remain in the range of 0.2 - 0.4V

OK or NG

OK >> **INSPECTION END**
NG >> GO TO 3.

3. CHECK GROUND CONNECTIONS

1. Turn ignition switch OFF.
2. Loosen and retighten ground screws on the body.
   Refer to EC-548, "Ground Inspection" .

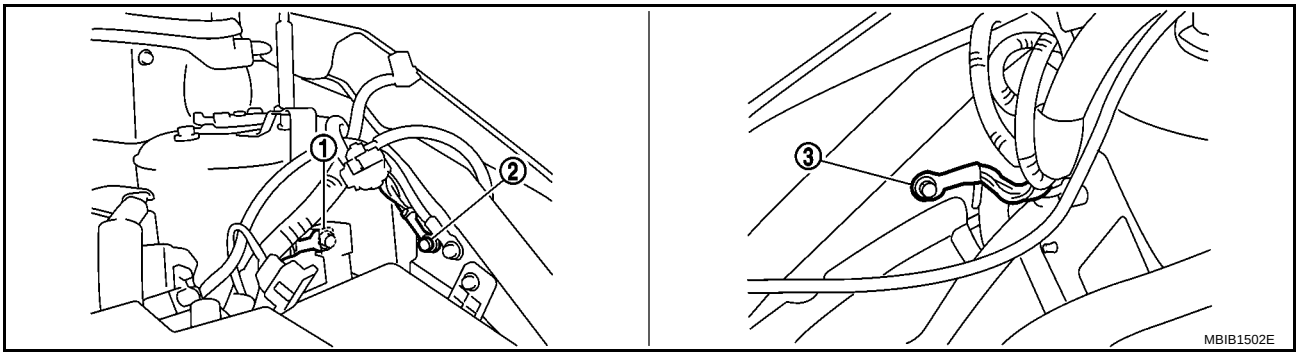

1. Body ground E44
2. Body ground E45
3. Body ground E28

OK or NG

OK >> GO TO 4.
NG >> Repair or replace ground connections.

4. CHECK HO2S2 GROUND CIRCUIT FOR OPEN AND SHORT

1. Disconnect heated oxygen sensor 2 harness connector (1).
   - ⇦: Vehicle front
   - Heated oxygen sensor 2 (2)
   - Oil pan (3)
2. Disconnect ECM harness connector.
3. Check harness continuity between ECM terminal 74 and HO2S2 terminal 4. Refer to Wiring Diagram.

   Continuity should exist.

4. Also check harness for short to ground and short to power.

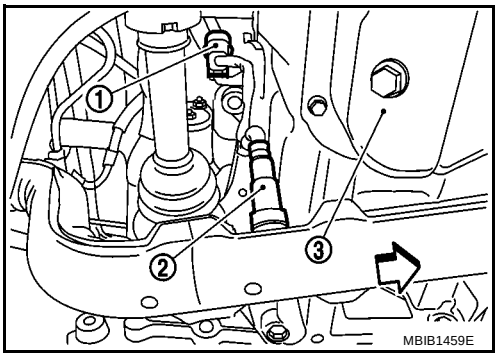

OK or NG

OK >> GO TO 5.
NG >> Repair open circuit or short to ground or short to power in harness or connectors.

5. CHECK HO2S2 INPUT SIGNAL CIRCUIT FOR OPEN AND SHORT

1. Check harness continuity between ECM terminal 16 and HO2S2 terminal 1.
   Refer to Wiring Diagram.

   Continuity should exist.

2. Check harness continuity between ECM terminal 16 or HO2S2 terminal 1 and ground.
   Refer to Wiring Diagram.

   Continuity should not exist.

3. Also check harness for short to power.

OK or NG

OK >> GO TO 6.
NG >> Repair open circuit or short to ground or short to power in harness or connectors.

6. CHECK HEATED OXYGEN SENSOR 2

Refer to EC-772, "Component Inspection" .

OK or NG

OK >> GO TO 7.
NG >> Replace heated oxygen sensor 2.

7. CHECK INTERMITTENT INCIDENT

Refer to EC-542, "TROUBLE DIAGNOSIS FOR INTERMITTENT INCIDENT" .

>> **INSPECTION END**

Component Inspection

BBS003CD

HEATED OXYGEN SENSOR 2

With CONSULT-II

1. Turn ignition switch ON and select “DATA MONITOR” mode with CONSULT-II.
2. Start engine and warm it up to the normal operating temperature.
3. Turn ignition switch OFF and wait at least 10 seconds.
4. Start engine and keep the engine speed between 3,500 and 4,000 rpm for at least 1 minute under no load.
5. Let engine idle for 1 minute.

DATA MONITOR	
MONITOR	NO DTC
ENG SPEED	XXX rpm
COOLAN TEMP/S	XXX °C

SEF174Y

6. Select “FUEL INJECTION” in “ACTIVE TEST” mode, and select “HO2S2 (B1)” as the monitor item with CONSULT-II.

ACTIVE TEST	
FUEL INJECTION	25 %
MONITOR	
ENG SPEED	XXX rpm
HO2S1 (B1)	XXX V
HO2S2 (B1)	XXX V
HO2S1 MNTR (B1)	RICH
HO2S2 MNTR (B1)	RICH

SEF662Y

7. Check “HO2S2 (B1)” at idle speed when adjusting “FUEL INJECTION” to ±25%.

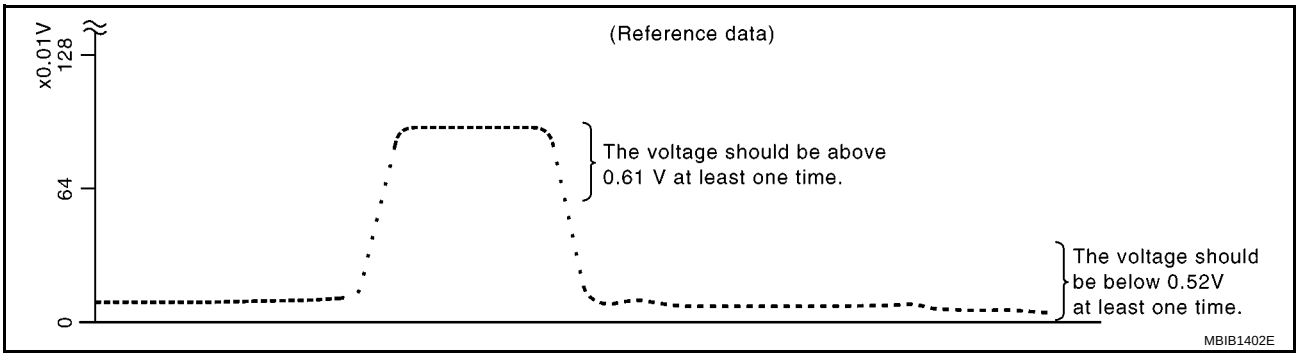

“HO2S2 (B1)” should be above 0.61V at least once when the “FUEL INJECTION” is +25%.
“HO2S2 (B1)” should be below 0.52V at least once when the “FUEL INJECTION” is –25%.

CAUTION:

- **Discard any heated oxygen sensor which has been dropped from a height of more than 0.5 m (19.7 in) onto a hard surface such as a concrete floor; use a new one.**
- **Before installing new oxygen sensor, clean exhaust system threads using Oxygen Sensor Thread Cleaner and approved anti-seize lubricant.**

Without CONSULT-II

1. Start engine and warm it up to the normal operating temperature.
2. Turn ignition switch OFF and wait at least 10 seconds.
3. Start engine and keep the engine speed between 3,500 and 4,000 rpm for at least 1 minute under no load.
4. Let engine idle for 1 minute.
5. Set voltmeter probes between ECM terminal 16 (HO2S2 signal) and ground.
6. Check the voltage when revving up to 4,000 rpm under no load at least 10 times.
   (Depress and release accelerator pedal as soon as possible.)
   The voltage should be above 0.61V at least once during this procedure.
   If the voltage is above 0.61V at step 6, step 7 is not necessary.

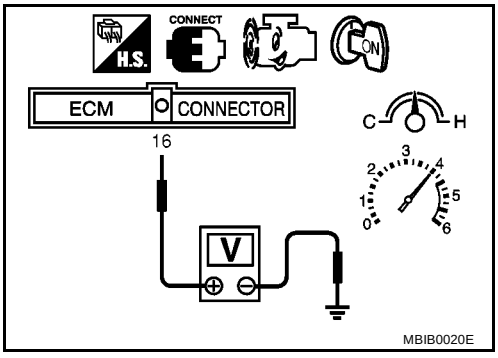

7. Keep vehicle idling for 10 minutes, then check voltage. Or check the voltage when coasting from 80 km/h (50 MPH) in 3rd gear position.
   The voltage should be below 0.52V at least once during this procedure.
8. If NG, replace heated oxygen sensor 2.

CAUTION:

- **Discard any heated oxygen sensor which has been dropped from a height of more than 0.5 m (19.7 in) onto a hard surface such as a concrete floor; use a new one.**
- **Before installing new oxygen sensor, clean exhaust system threads using Oxygen Sensor Thread Cleaner and approved anti-seize lubricant.**

Removal and Installation

BBS003CE

HEATED OXYGEN SENSOR 2

Refer to EX-3, "EXHAUST SYSTEM" .

HO2S2 HEATER

PFP:226A0

Description

BBS003BS

SYSTEM DESCRIPTION

Sensor	Input Signal to ECM	ECM Function	Actuator
Camshaft position sensor (PHASE)	Engine speed	Heated oxygen sensor 2 heater control	Heated oxygen sensor 2 heater
Crankshaft position sensor (POS)			
Engine coolant temperature sensor	Engine coolant temperature		
Manifold absolute pressure (MAP) sensor	Amount of intake air		

The ECM performs ON/OFF control of the heated oxygen sensor 2 heater corresponding to the engine speed, amount of intake air and engine coolant temperature.

OPERATION

Engine speed rpm	Heated oxygen sensor 2 heater
Above 3,800	OFF
● Below 3,800 rpm after the following conditions are met. ● Engine: After warming up ● Keeping the engine speed between 3,500 and 4,000 rpm for 1 minute and at idle for 1 minute under no load	ON

CONSULT-II Reference Value in Data Monitor Mode

BBS003BT

Specification data are reference values.

MONITOR ITEM	CONDITION	SPECIFICATION
HO2S2 HTR (B1)	● Engine speed: Below 3,800 rpm after the following conditions are met. – Engine: After warming up – Keeping the engine speed at between 3,500 to 4,000 rpm for 1 minute and at idle for 1 minute under no load	ON
	● Engine speed: Above 3,800 rpm	OFF

Wiring Diagram

BBS003BU

EC-RRO2-01

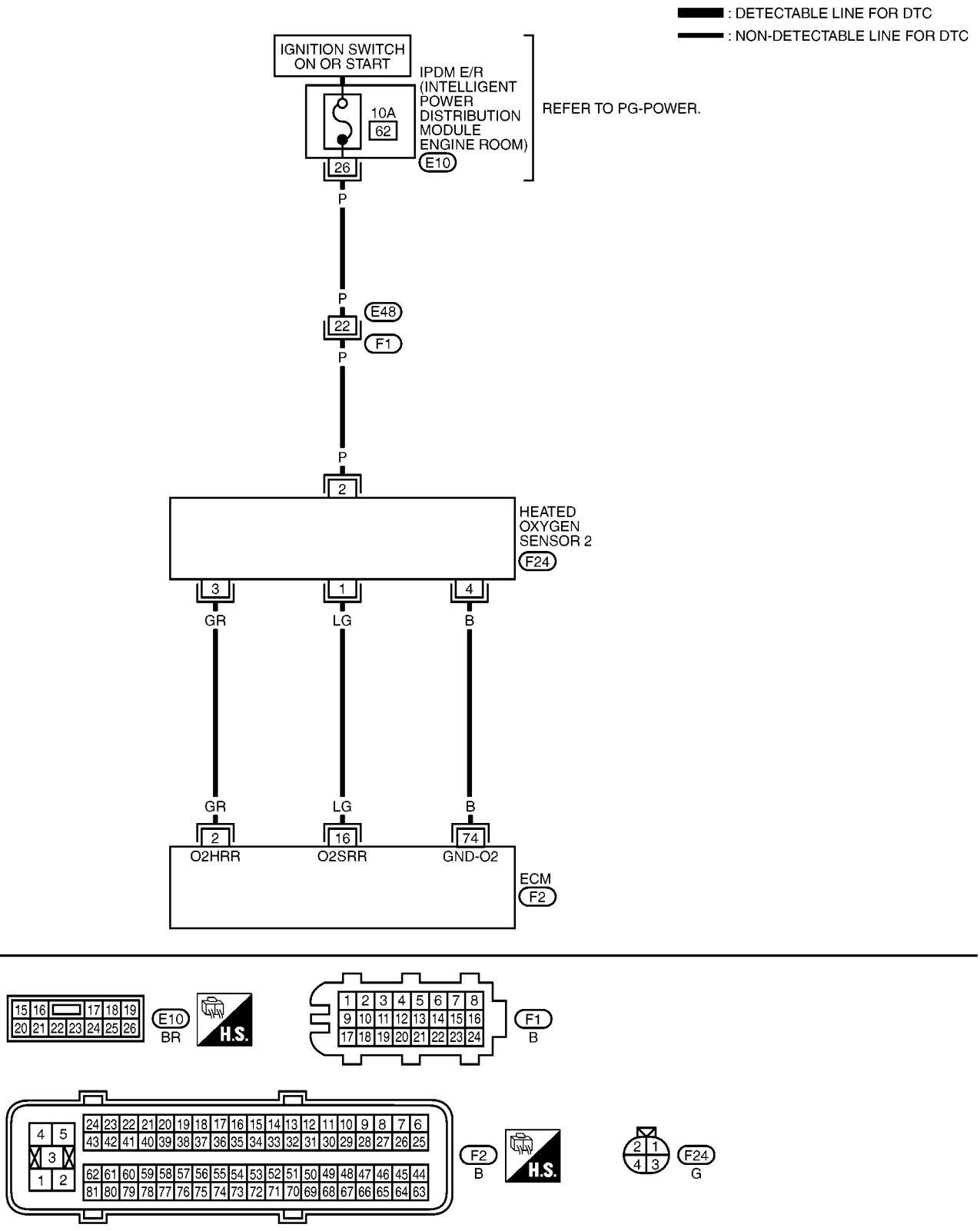

MBWA1543E

Specification data are reference values and are measured between each terminal and ground.

CAUTION:

Do not use ECM ground terminals when measuring input/output voltage. Doing so may result in damage to the ECM's transistor. Use a ground other than ECM terminals, such as the ground.

TERMINAL NO.	WIRE COLOR	ITEM	CONDITION	DATA (DC Voltage)
2	GR	Heated oxygen sensor 2 heater	**[Engine is running]** ● Engine speed: Below 3,800 rpm after the following conditions are met. – Engine: After warming up – Keeping the engine speed between 3,500 and 4,000 rpm for 1 minute and at idle for 1 minute under no load.	0 - 1.0V
			[Ignition switch: ON] ● Engine stopped **[Engine is running]** ● Engine speed: Above 3,800 rpm	BATTERY VOLTAGE (11 - 14V)
16	LG	Heated oxygen sensor 2	**[Engine is running]** ● Revving engine from idle to 3,000rpm quickly after the following conditions are met. – Engine: After warming up – Keeping the engine speed between 3,500 and 4,000 rpm for 1 minute and at idle for 1 minute under no load.	0 - Approximately 1.0V
74	B	Sensor ground (Heated oxygen sensor)	**[Engine is running]** ● **Warm-up condition** ● Idle speed	Approximately 0V

Diagnostic Procedure

BBS003BV

1. CHECK OVERALL FUNCTION

1. Start engine and warm it up to the normal operating temperature.
2. Turn ignition switch OFF and wait at least 10 seconds.
3. Start engine and keep the engine speed between 3,500 and 4,000 rpm for at least 1 minute under no load.
4. Let engine idle for 1 minute.
5. Set voltmeter proves between ECM terminal 2 (HO2S2 heater signal) and ground.
6. Check the voltage under the following conditions.

Conditions	Voltage
At idle	0 - 1V
Engine speed: Above 3,800 rpm	Battery voltage

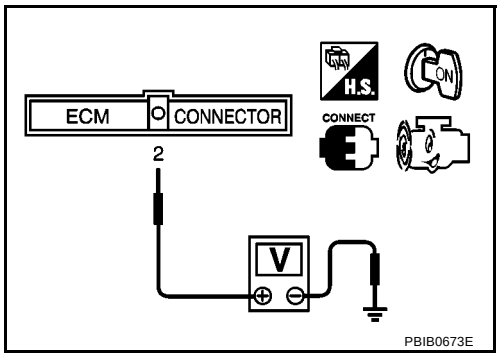

OK or NG

OK >> **INSPECTION END**
NG >> GO TO 2.

2. CHECK GROUND CONNECTIONS

1. Turn ignition switch OFF.
2. Loosen and retighten ground screws on the body.
   Refer to EC-548, "Ground Inspection" .

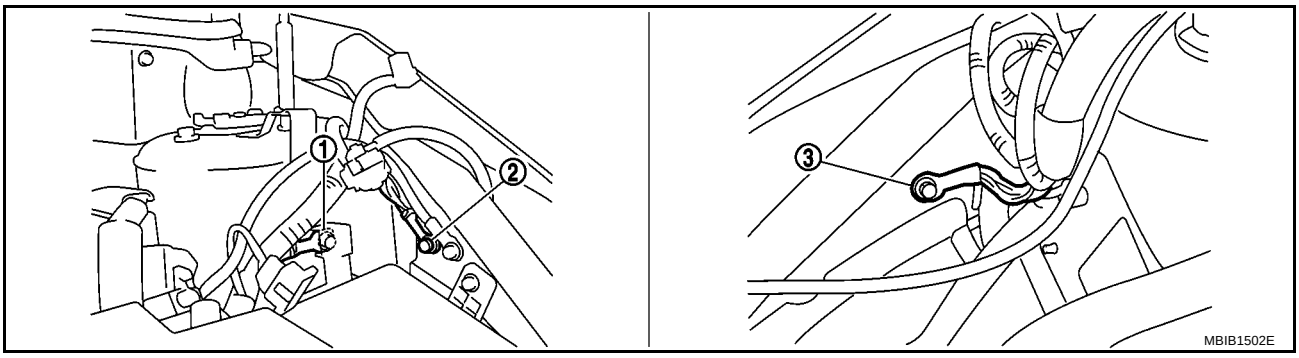

1. Body ground E44
2. Body ground E45
3. Body ground E28

OK or NG

OK >> GO TO 3.
NG >> Repair or replace ground connections.

3. CHECK HO2S2 POWER SUPPLY CIRCUIT

1. Disconnect heated oxygen sensor 2 harness connector (1).
   - ⇦: Vehicle front
   - Heated oxygen sensor 2 (2)
   - Oil pan (3)
2. Turn ignition switch ON.

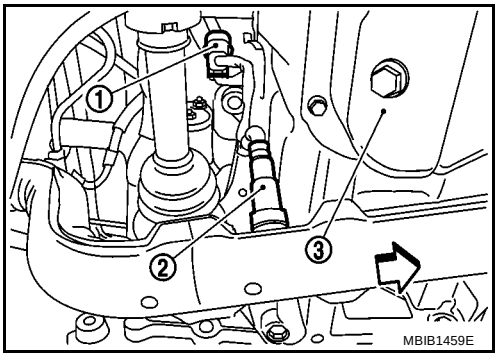

3. Check voltage between HO2S2 terminal 2 and ground with CONSULT-II or tester.

   Voltage: Battery voltage

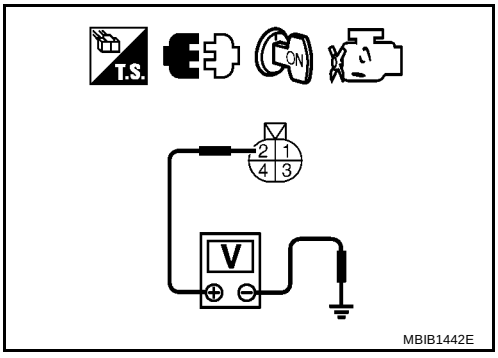

OK or NG

OK >> GO TO 5.
NG >> GO TO 4.

4. DETECT MALFUNCTIONING PART

Check the following.

- Harness connectors E48, F1
- IPDM E/R connector E10
- 10A fuse
- Harness for open or short between heated oxygen sensor 2 and fuse

>> Repair harness or connectors.

5. CHECK HO2S2 OUTPUT SIGNAL CIRCUIT FOR OPEN AND SHORT

1. Turn ignition switch OFF.
2. Disconnect ECM harness connector.
3. Check harness continuity between ECM terminal 2 and HO2S2 terminal 3.
   Refer to Wiring Diagram.

   Continuity should exist.

4. Also check harness for short to ground and short to power.

OK or NG

OK >> GO TO 6.
NG >> Repair open circuit or short to ground or short to power in harness or connectors.

6. CHECK HEATED OXYGEN SENSOR 2 HEATER

Refer to EC-778, "Component Inspection" .

OK or NG

OK >> GO TO 7.
NG >> Replace heated oxygen sensor 2.

7. CHECK INTERMITTENT INCIDENT

Refer to EC-542, "TROUBLE DIAGNOSIS FOR INTERMITTENT INCIDENT" .

>> **INSPECTION END**

Component Inspection

BBS003BW

HEATED OXYGEN SENSOR 2 HEATER

1. Check resistance between HO2S2 terminals as follows.

Terminal No.	Resistance
2 and 3	8.0 - 10.0 Ω at 25°C (77°F)
1 and 2, 3, 4	∞ Ω (Continuity should not exist)
4 and 1, 2, 3	

2. If NG, replace heated oxygen sensor 2.

CAUTION:

- **Discard any heated oxygen sensor which has been dropped from a height of more than 0.5 m (19.7 in) onto a hard surface such as a concrete floor; use a new one.**
- **Before installing new oxygen sensor, clean exhaust system threads using Oxygen Sensor Thread Cleaner and approved anti-seize lubricant.**

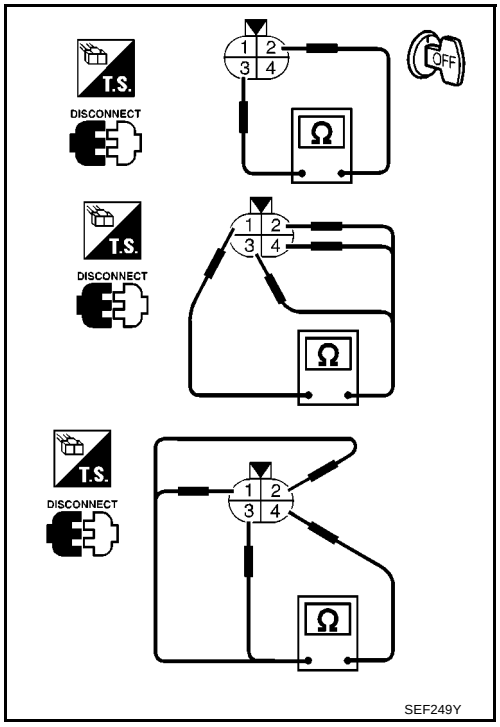

Removal and Installation

BBS003BX

HEATED OXYGEN SENSOR 2

Refer to EX-3, "EXHAUST SYSTEM" .

IAT SENSOR

PFP:22630

Component Description

BBS003BY

The intake air temperature sensor is built into manifold absolute pressure sensor. The sensor detects intake air temperature and transmits a signal to the ECM.
The temperature sensing unit uses a thermistor which is sensitive to the change in temperature. Electrical resistance of the thermistor decreases in response to the temperature rise.

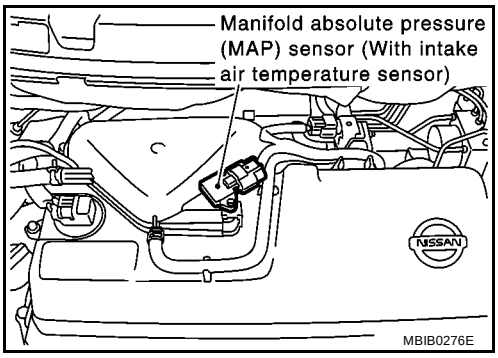

<Reference data>

Intake air temperature °C (°F)	Voltage* V	Resistance kΩ
25 (77)	3.32	1.9 - 2.1
80 (176)	1.23	0.31 - 0.37

*: This data is reference value and is measured between ECM terminal 34 (Intake air temperature sensor) and ground.

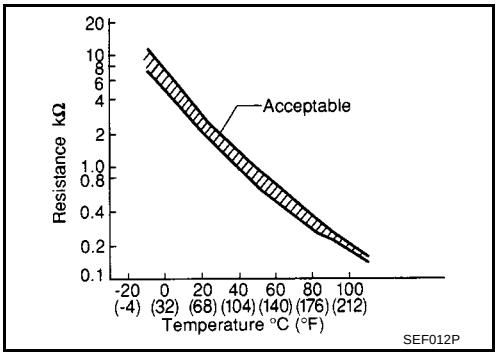

CAUTION:
Do not use ECM ground terminals when measuring input/output voltage. Doing so may result in damage to the ECM's transistor. Use a ground other than ECM terminals, such as the ground.

Wiring Diagram

BBS003BZ

EC-IATSEN-01

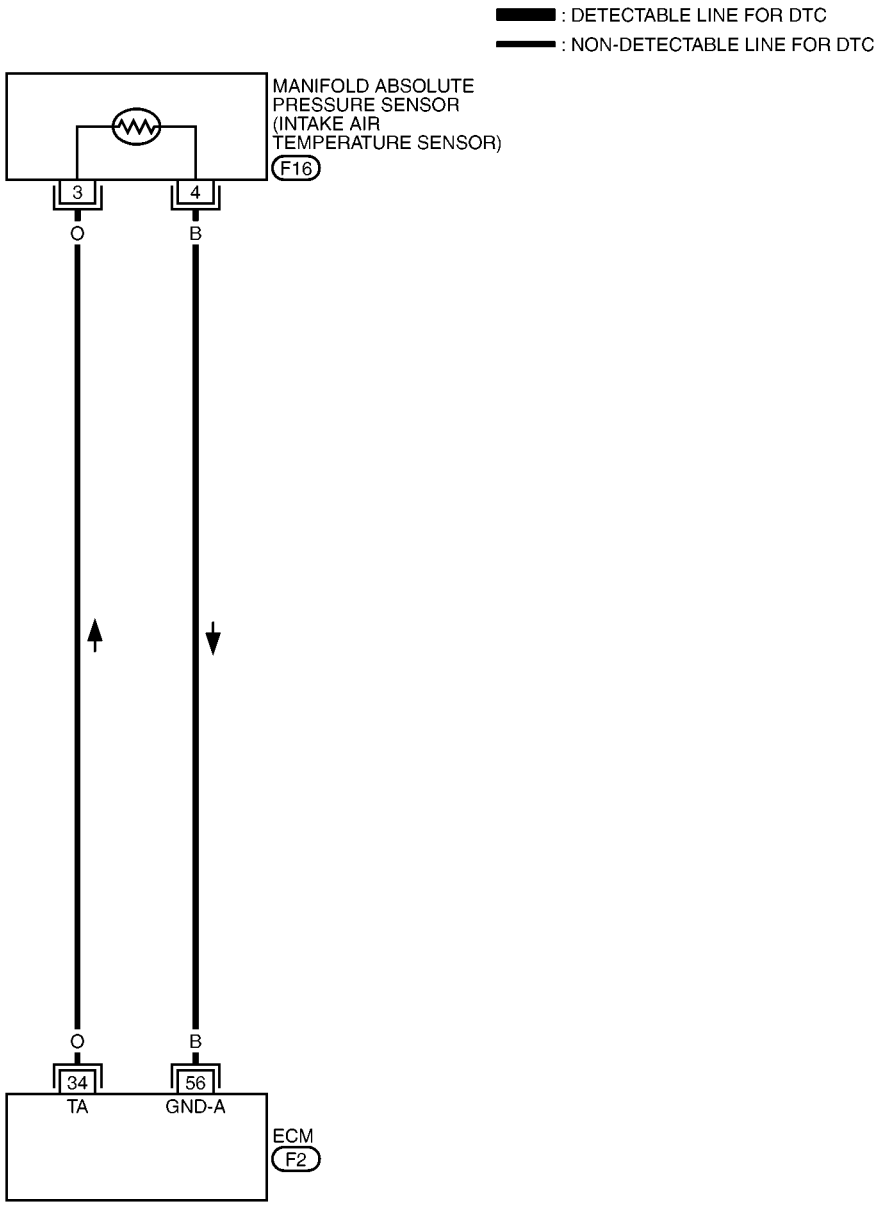

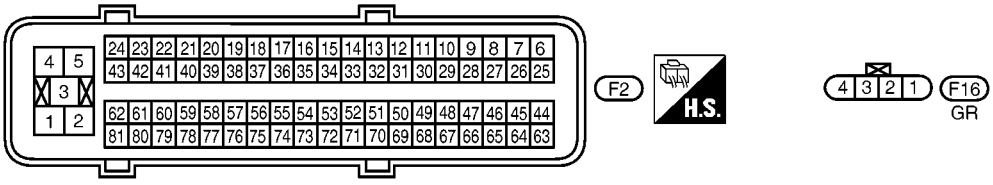

MBWA1544E

Diagnostic Procedure

BBS003C0

1. CHECK OVERALL FUNCTION

1. Turn ignition switch ON.
2. Check voltage between ECM terminal 34 and ground with CONSULT-II or tester.

Voltage: Approximately 0 - 4.8V

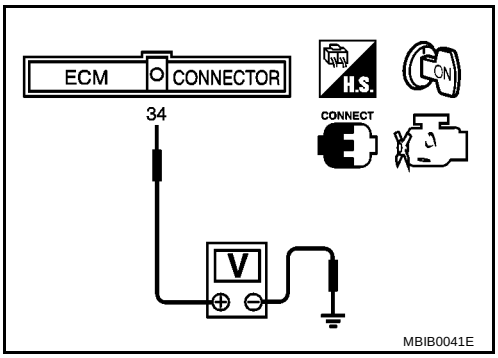

OK or NG

OK >> **INSPECTION END**
NG >> GO TO 2.

2. CHECK GROUND CONNECTIONS

1. Turn ignition switch OFF.
2. Loosen and retighten ground screws on the body.
Refer to EC-548, "Ground Inspection" .

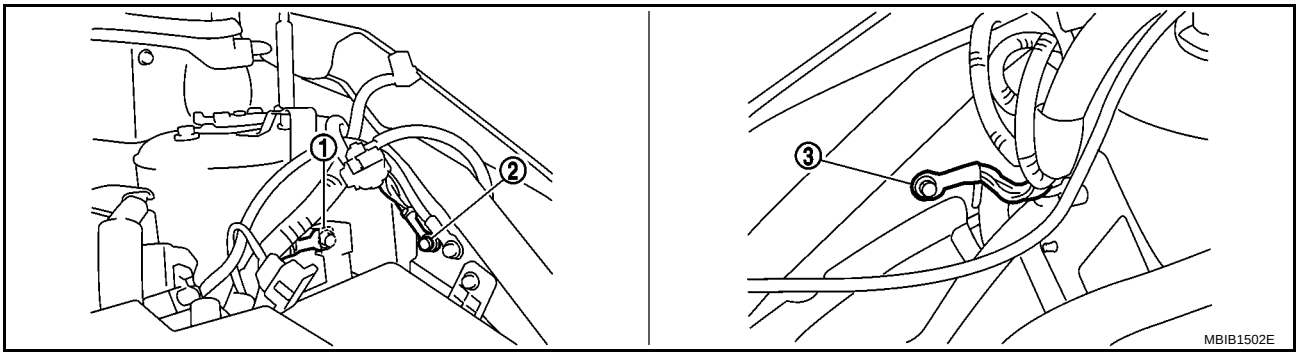

1. Body ground E44
2. Body ground E45
3. Body ground E28

OK or NG

OK >> GO TO 3.
NG >> Repair or replace ground connections.

3. CHECK INTAKE AIR TEMPERATURE SENSOR POWER SUPPLY CIRCUIT

1. Disconnect manifold absolute pressure (MAP) sensor (with intake air temperature sensor) harness connector.
2. Turn ignition switch ON.

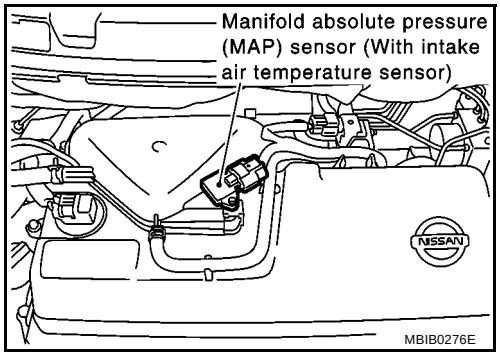

3. Check voltage between MAP sensor terminal 3 and ground with CONSULT-II or tester.

Voltage: Approximately 5V

OK or NG

OK >> GO TO 4.
NG >> Repair harness or connectors.

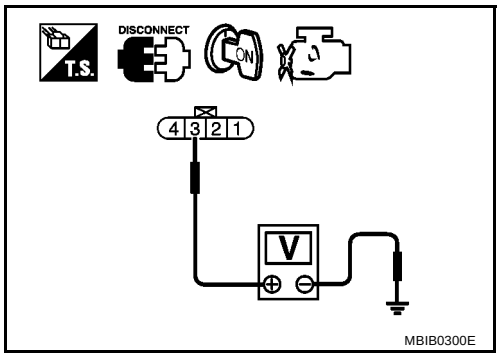

4. CHECK INTAKE AIR TEMPERATURE SENSOR GROUND CIRCUIT FOR OPEN AND SHORT

1. Turn ignition switch OFF.
2. Disconnect ECM harness connector.
3. Check harness continuity between MAP sensor terminal 4 and ECM terminal 56.
   Refer to Wiring Diagram.

Continuity should exist.

4. Also check harness for short to ground and short to power.

OK or NG

OK >> GO TO 5.
NG >> Repair open circuit or short to ground or short to power in harness or connectors.

5. CHECK INTAKE AIR TEMPERATURE SENSOR

Refer to EC-783, "Component Inspection" .

OK or NG

OK >> GO TO 6.
NG >> Replace manifold absolute pressure sensor (with intake air temperature sensor).

6. CHECK INTERMITTENT INCIDENT

Refer to EC-542, "TROUBLE DIAGNOSIS FOR INTERMITTENT INCIDENT" .

>> **INSPECTION END**

Component Inspection

BBS003C1

INTAKE AIR TEMPERATURE SENSOR

1. Check resistance between manifold absolute pressure sensor terminals 3 and 4 under the following conditions.

Intake air temperature °C (°F)	Resistance kΩ
25 (77)	1.9 - 2.1

2. If NG, replace manifold absolute pressure sensor (with intake air temperature sensor).

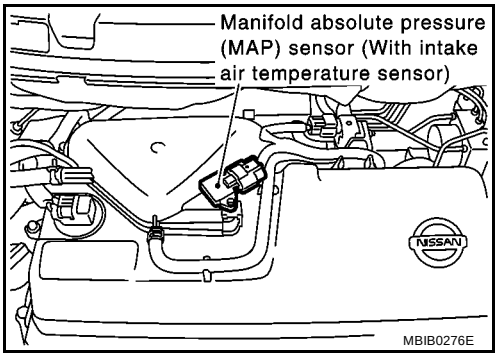

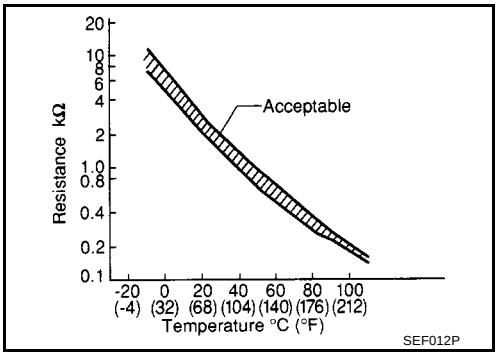

Removal and Installation

BBS003C2

MANIFOLD ABSOLUTE PRESSURE SENSOR

Refer to EM-18, "AIR CLEANER AND AIR DUCT" .

IGNITION SIGNAL

PFP:22448

Component Description

BBS003CF

IGNITION COIL & POWER TRANSISTOR

The ignition signal from the ECM is sent to and amplified by the power transistor. The power transistor turns ON and OFF the ignition coil primary circuit. This ON-OFF operation induces the proper high voltage in the coil secondary circuit.

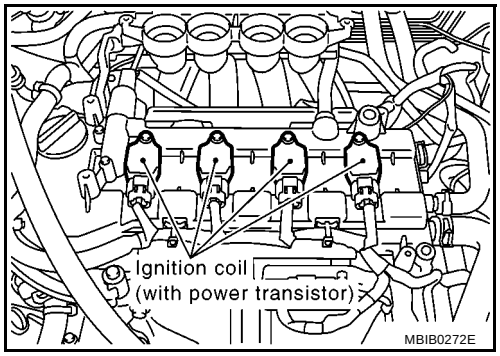

Wiring Diagram

BBS003CG

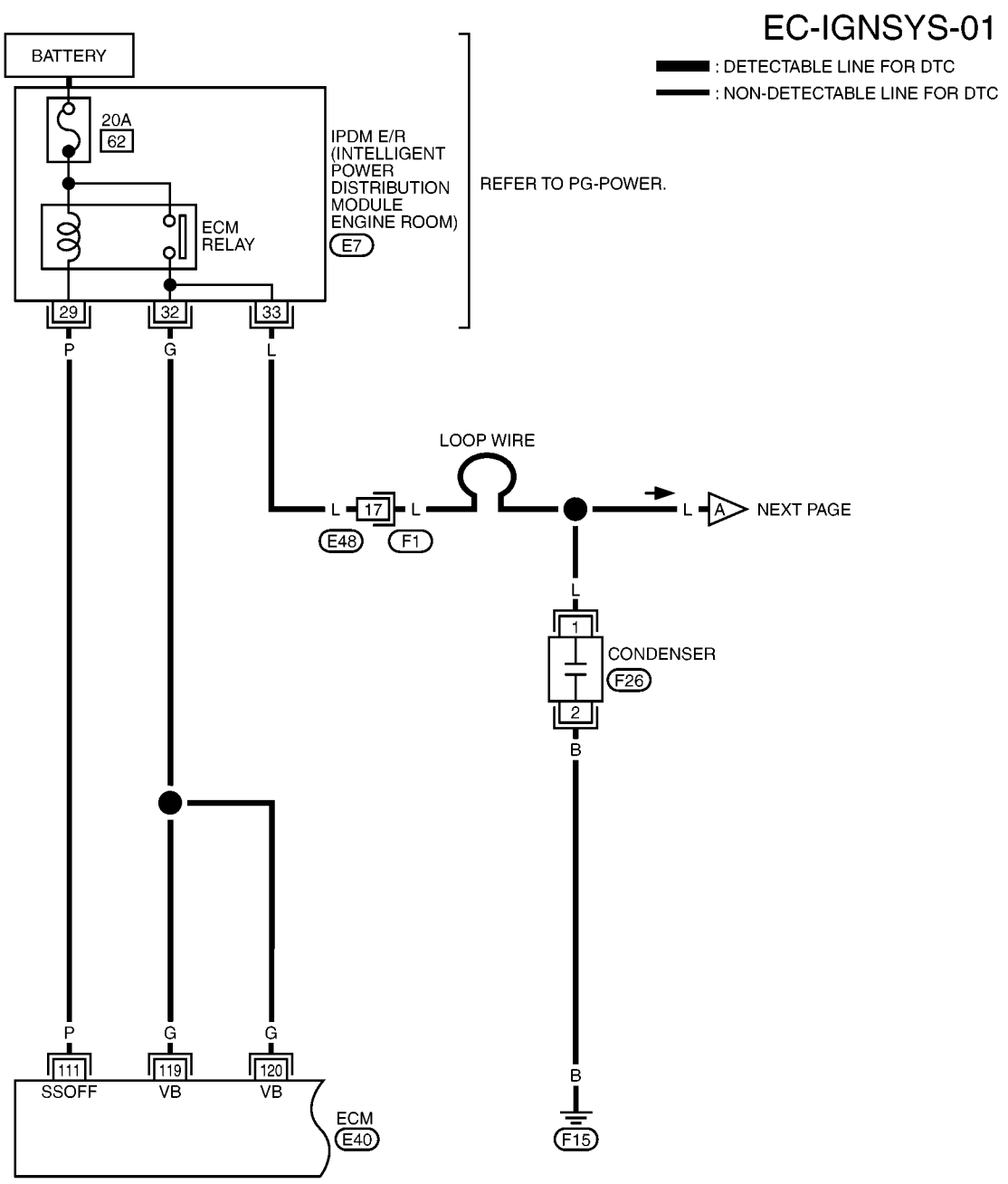

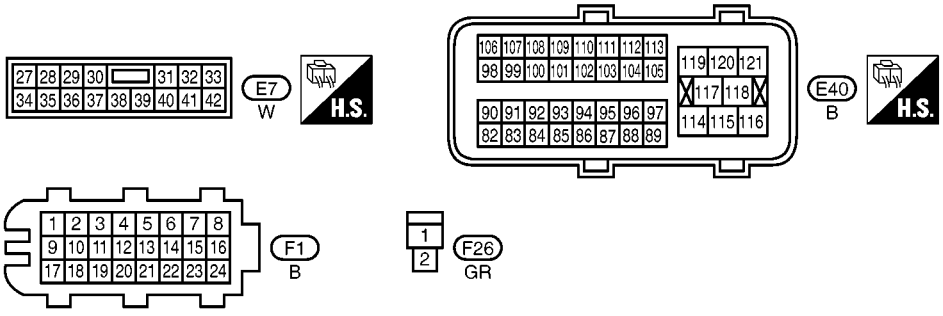

MBWA1536E

Specification data are reference values and are measured between each terminal and ground.

CAUTION:

Do not use ECM ground terminals when measuring input/output voltage. Doing so may result in damage to the ECM's transistor. Use a ground other than ECM terminals, such as the ground.

TERMINAL NO.	WIRE COLOR	ITEM	CONDITION	DATA (DC Voltage)
111	P	ECM relay (Self shut-off)	**[Engine is running]** **[Ignition switch: OFF]** ● For a few seconds after turning ignition switch OFF	0 - 1.0V
			[Ignition switch: OFF] ● More than a few seconds passed after turning ignition switch OFF	BATTERY VOLTAGE (11 - 14V)
119 120	G G	Power supply for ECM	**[Ignition switch: ON]**	BATTERY VOLTAGE (11 - 14V)

EC-IGNSYS-02

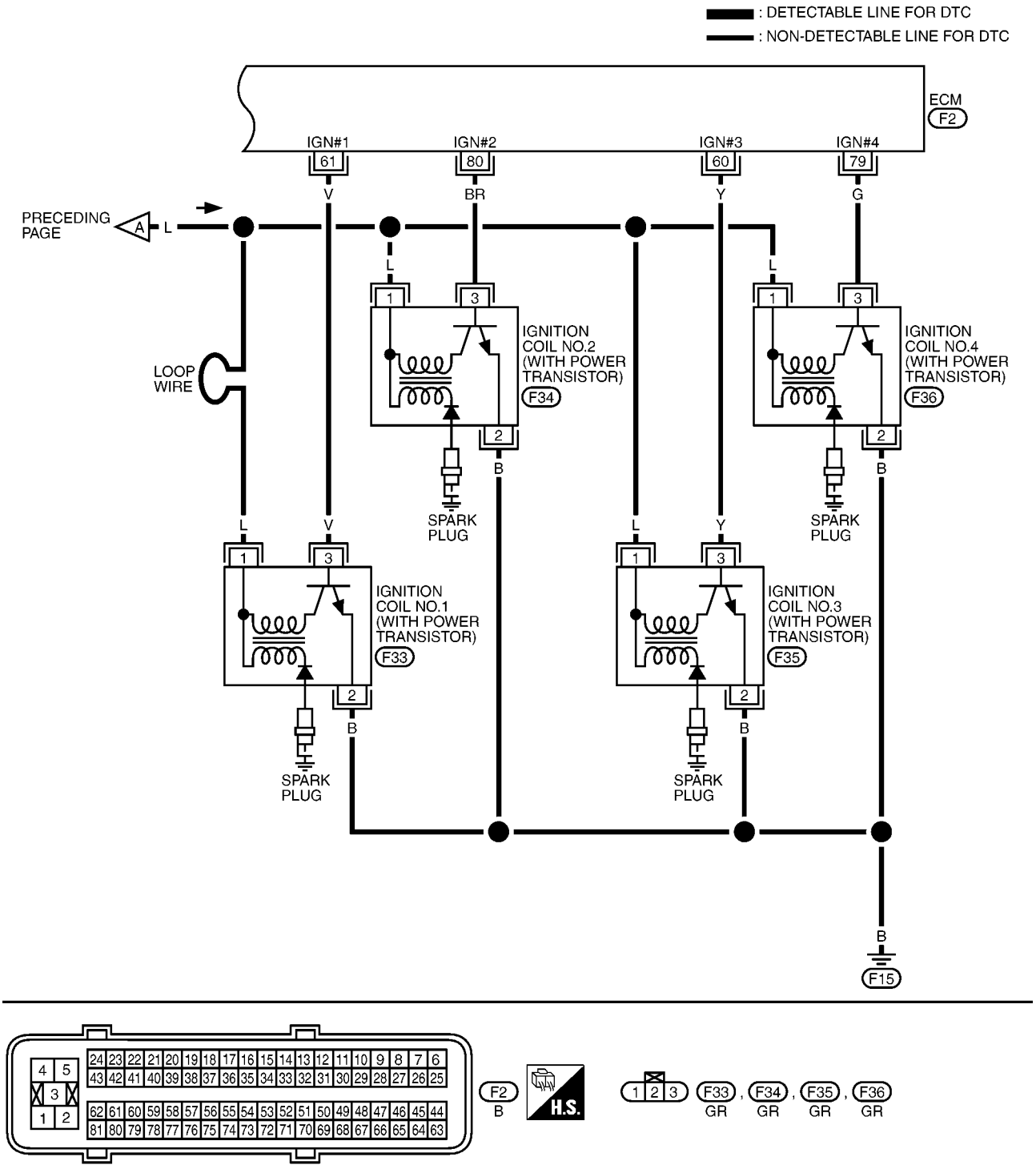

MBWA1537E

Specification data are reference values and are measured between each terminal and ground.
Pulse signal is measured by CONSULT-II.

CAUTION:
Do not use ECM ground terminals when measuring input/output voltage. Doing so may result in damage to the ECM's transistor. Use a ground other than ECM terminals, such as the ground.

TERMINAL NO.	WIRE COLOR	ITEM	CONDITION	DATA (DC Voltage)
60 61 79 80	Y V G BR	Ignition signal No. 3 Ignition signal No. 1 Ignition signal No. 4 Ignition signal No. 2	**[Engine is running]** ● **Warm-up condition** ● Idle speed **NOTE:** The pulse cycle changes depending on rpm at idle.	0 - 0.1V★ 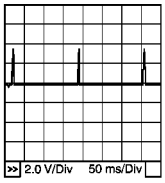 PBIB0521E
			[Engine is running] ● **Warm-up condition** ● Engine speed: 2,000 rpm	0 - 0.2V★ 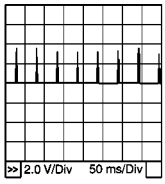 PBIB0522E

★: Average voltage for pulse signal (Actual pulse signal can be confirmed by oscilloscope.)

Diagnostic Procedure

BBS003CH

1. CHECK ENGINE START

Turn ignition switch OFF and restart engine.
Is engine running?

Yes or No

Yes (With CONSULT-II)>>GO TO 2.
Yes (Without CONSULT-II)>>GO TO 3.
No >> GO TO 4.

2. CHECK OVERALL FUNCTION

With CONSULT-II

1. Perform “POWER BALANCE” in “ACTIVE TEST” mode with CONSULT-II.
2. Make sure that each circuit produces a momentary engine speed drop.

OK or NG

OK >> **INSPECTION END**
NG >> GO TO 10.

ACTIVE TEST	
POWER BALANCE	
MONITOR	
ENG SPEED	XXX rpm

MBIB0302E

3. CHECK OVERALL FUNCTION

Without CONSULT-II

1. Let engine idle.
2. Read the voltage signal between ECM terminals 60, 61, 79, 80 and ground with an oscilloscope.
3. Verify that the oscilloscope screen shows the signal wave as shown in the figure.

   NOTE:
   The pulse cycle changes depending on rpm at idle.

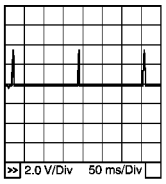

PBIB0521E

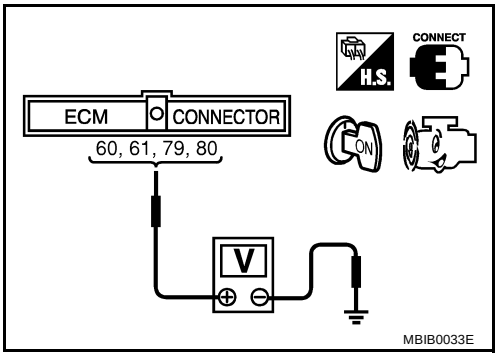

OK or NG

OK >> **INSPECTION END**
NG >> GO TO 10.

4. CHECK IGNITION COIL POWER SUPPLY CIRCUIT-I

1. Turn ignition switch OFF, wait at least 10 seconds and then turn ON.
2. Check voltage between ECM terminals 119, 120 and ground with CONSULT-II or tester.

   Voltage: Battery voltage

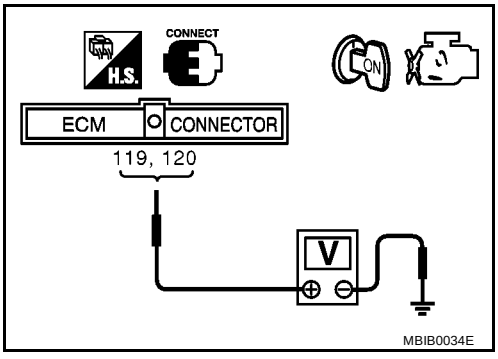

OK or NG

OK >> GO TO 5.
NG >> Go to EC-543, "POWER SUPPLY AND GROUND CIRCUIT" .

5. CHECK IGNITION COIL POWER SUPPLY CIRCUIT-II

1. Turn ignition switch OFF.
2. Disconnect condenser harness connector.
3. Turn ignition switch ON.
4. Check voltage between condenser terminal 1 and ground with CONSULT-II or tester.

   Voltage: Battery voltage

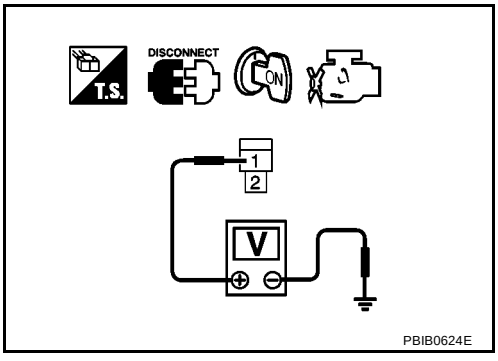

OK or NG

OK >> GO TO 8.
NG >> GO TO 6.

6. CHECK IGNITION COIL POWER SUPPLY CIRCUIT-III

1. Turn ignition switch OFF.
2. Disconnect IPDM E/R harness connector.
3. Check harness continuity between condenser terminal 1 and IPDM terminal 33.
   Refer to Wiring Diagram.

   Continuity should exist.

4. Also check harness for short to power and short to ground.

OK or NG

OK >> GO TO 15.
NG >> GO TO 7.

7. DETECT MALFUNCTION PART

Check the following.

- Harness connectors E48, F1
- Harness for open or short between IPDM E/R and condenser

>> Repair open circuit or short to ground or short to power in harness or connectors.

8. CHECK CONDENSER GROUND CIRCUIT FOR OPEN AND SHORT

1. Turn ignition switch OFF.
2. Check harness continuity between condenser terminal 2 and ground.
   Refer to Wiring Diagram.

   Continuity should exist.

3. Also check harness for short to power.

OK or NG

OK >> GO TO 9.
NG >> Repair open circuit or short to power in harness or connector.

9. CHECK CONDENSER

Refer to EC-792, "Component Inspection" .

OK or NG

OK >> GO TO 10.
NG >> Replace condenser.

10. CHECK IGNITION COIL POWER SUPPLY CIRCUIT-V

1. Turn ignition switch OFF.
2. Reconnect all harness connectors disconnected.
3. Disconnect ignition coil harness connector.
4. Turn ignition switch ON.

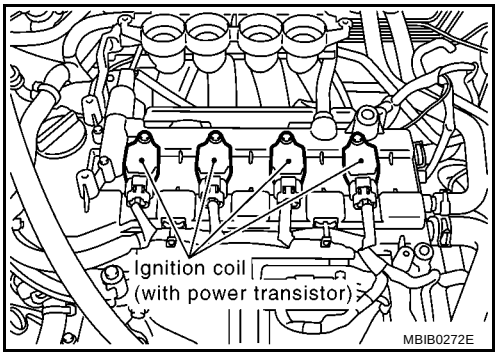

5. Check voltage between ignition coil terminal 1 and ground with CONSULT-II or tester.

Voltage: Battery voltage

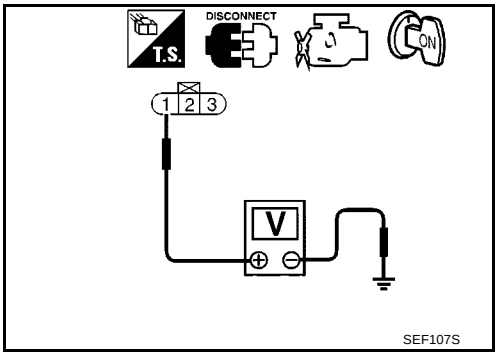

OK or NG

OK >> GO TO 12.
NG >> GO TO 11.

11. DETECT MALFUNCTIONING PART

Check harness for open or short between ignition coil and harness connector F1.

>> Repair open circuit or short to ground or short to power in harness or connectors.

12. CHECK IGNITION COIL GROUND CIRCUIT FOR OPEN AND SHORT

1. Turn ignition switch OFF.
2. Check harness continuity between ignition coil terminal 2 and ground.
   Refer to Wiring Diagram.

Continuity should exist.

3. Also check harness for short to power.

OK or NG

OK >> GO TO 13.
NG >> Repair open circuit or short to power in harness or connectors.

13. CHECK IGNITION COIL OUTPUT SIGNAL CIRCUIT FOR OPEN AND SHORT

1. Disconnect ECM harness connector.
2. Check harness continuity between ECM terminals 60, 61, 79, 80 and ignition coil terminal 3.
   Refer to Wiring Diagram.

Continuity should exist.

3. Also check harness for short to ground and short to power.

OK or NG

OK >> GO TO 14.
NG >> Repair open circuit or short to ground or short to power in harness or connectors.

14. CHECK IGNITION COIL WITH POWER TRANSISTOR

Refer to EC-792, "Component Inspection" .

OK or NG

OK >> GO TO 15.
NG >> Replace malfunctioning ignition coil with power transistor.

15. CHECK INTERMITTENT INCIDENT

Refer to EC-542, "TROUBLE DIAGNOSIS FOR INTERMITTENT INCIDENT" .

OK or NG

OK >> Replace IPDM E/R. Refer to PG-18, "IPDM E/R (INTELLIGENT POWER DISTRIBUTION MODULE ENGINE ROOM)" .
NG >> Repair or replace.

Component Inspection

BBS003CI

IGNITION COIL WITH POWER TRANSISTOR

CAUTION:
Do the following procedure in the place where ventilation is good without the combustible.

1. Turn ignition switch OFF.
2. Disconnect ignition coil harness connector.
3. Check resistance between ignition coil terminals as follows.

Terminal No.	Resistance Ω [at 25°C (77°F)]
2 and 3	Except 0 or ∞
1 and 2	Except 0
1 and 3	

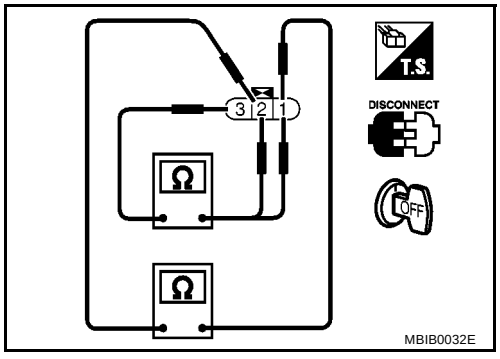

4. If NG, replace ignition coil with power transistor.
   If OK, go to next step.
5. Turn ignition switch OFF.
6. Reconnect all harness connectors disconnected.
7. Remove fuel pump fuse in IPDM E/R to release fuel pressure.
   NOTE:
   Do not use CONSULT-II to release fuel pressure, or fuel pressure applies again during the following procedure.
8. Start engine.
9. After engine stalls, crank it two or three times to release all fuel pressure.
10. Turn ignition switch OFF.
11. Remove ignition coil harness connectors to avoid the electrical discharge from the ignition coils.
12. Remove ignition coil and spark plug of the cylinder to be checked.
13. Crank engine for 5 seconds or more to remove combustion gas in the cylinder.
14. Connect spark plug and harness connector to ignition coil.

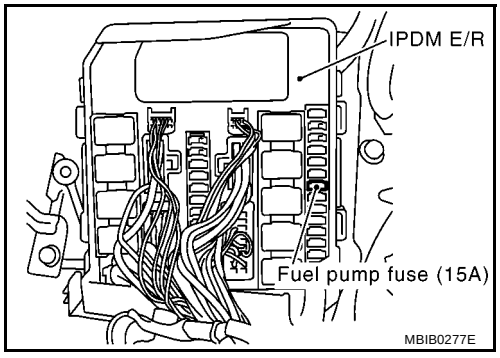

15. Fix ignition coil using a rope etc. with gap of 13 - 17 mm between the edge of the spark plug and grounded metal portion as shown in the figure.
16. Crank engine for about 3 seconds, and check whether spark is generated between the spark plug and the grounded part.

    Spark should be generated.

    CAUTION:
    - **Do not approach to the spark plug and the ignition coil within 50cm. Be careful not to get an electrical shock while checking, because the electrical discharge voltage becomes 20kV or more.**
    - **If might cause to damage the ignition coil if the gap of more than 17 mm is taken.**

    NOTE:
    When the gap is less than 13 mm, the spark might be generated even if the coil is malfunctioning.
17. If NG, replace ignition coil with power transistor.

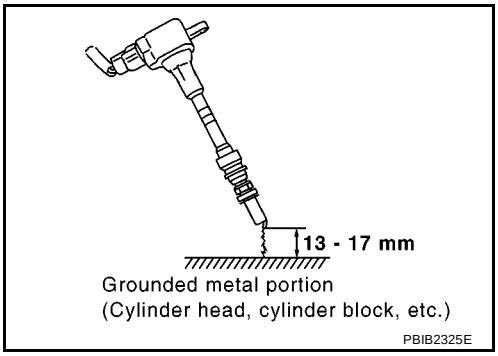

CONDENSER

1. Turn ignition switch OFF.
2. Disconnect condenser harness connector.
3. Check resistance between condenser terminals 1 and 2.

    Resistance: Above 1 MΩ at 25°C (77°F)

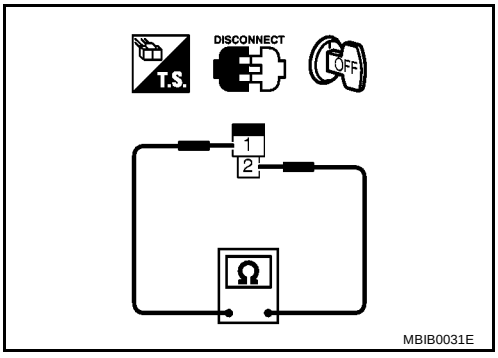

BBS003CJ

Removal and Installation

IGNITION COIL WITH POWER TRANSISTOR

Refer to EM-29, "IGNITION COIL" .

REFRIGERANT PRESSURE SENSOR

PFP:92136

Component Description

BBS003D4

The refrigerant pressure sensor (1) is installed at the condenser of the air conditioner system. The sensor uses an electrostatic volume pressure transducer to convert refrigerant pressure to voltage. The voltage signal is sent to ECM, and ECM controls cooling fan system.

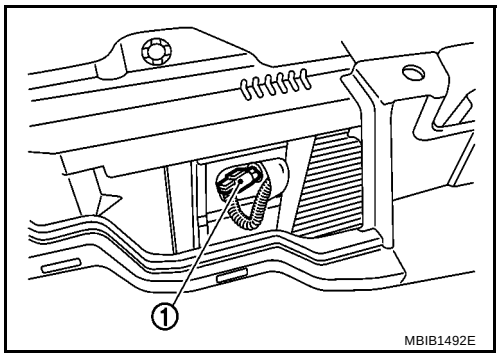

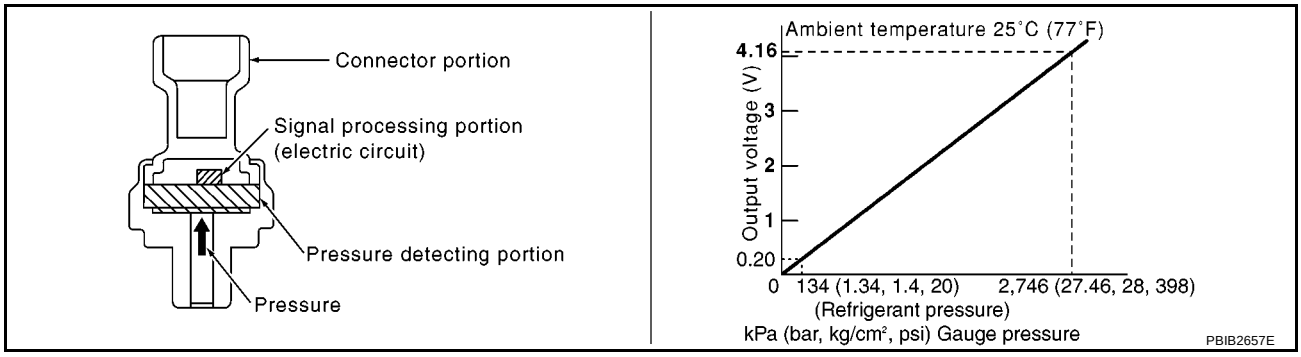

Wiring Diagram

BBS003D5

EC-RP/SEN-01

: DETECTABLE LINE FOR DTC
: NON-DETECTABLE LINE FOR DTC

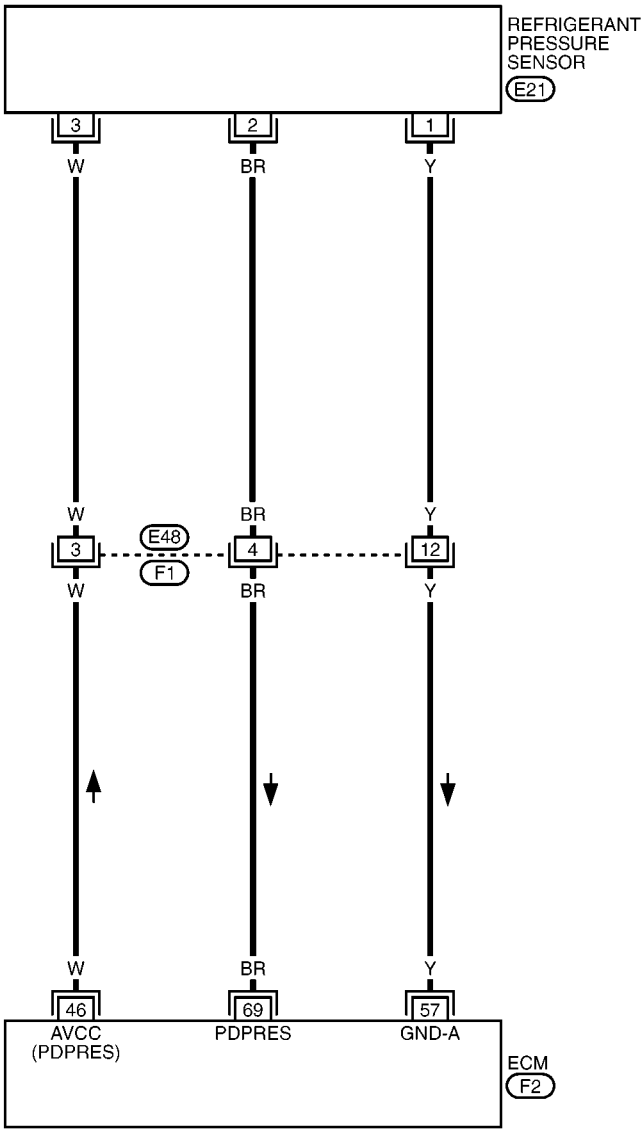

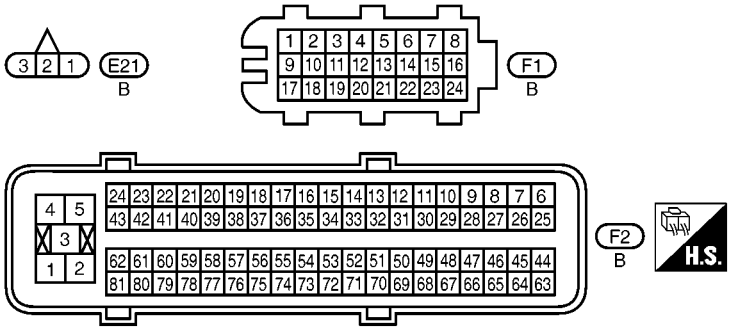

MBWA1540E

Specification data are reference values and are measured between each terminal and ground.

CAUTION:

Do not use ECM ground terminals when measuring input/output voltage. Doing so may result in damage to the ECM's transistor. Use a ground other than ECM terminals, such as the ground.

TERMINAL NO.	WIRE COLOR	ITEM	CONDITION	DATA (DC Voltage)
46	W	Sensor power supply (Refrigerant pressure sensor)	**[Ignition switch: ON]**	Approximately 5V
57	Y	Sensor ground (Refrigerant pressure sensor)	**[Engine is running]** ● **Warm-up condition** ● Idle speed	Approximately 0V
69	BR	Refrigerant pressure sensor	**[Engine is running]** ● **Warm-up condition** ● Both A/C switch and blower fan switch: ON. (Compressor operates.)	1.0 - 4.0V

Diagnostic Procedure

BBS003D6

1. CHECK REFRIGERANT PRESSURE SENSOR OVERALL FUNCTION

1. Start engine and warm it up to normal operating temperature.
2. Turn A/C switch and blower fan switch ON.
3. Check voltage between ECM terminal 69 and ground with CONSULT-II or tester.

Voltage: 1.0 - 4.0V

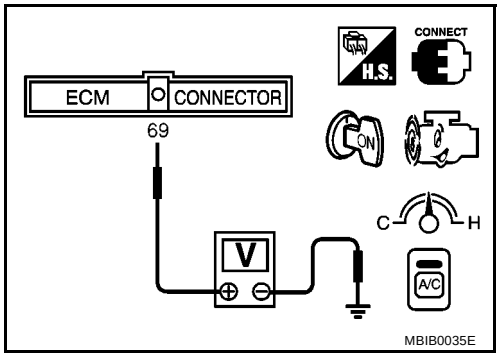

OK or NG

OK >> **INSPECTION END**
NG >> GO TO 2.

2. CHECK GROUND CONNECTIONS

1. Turn A/C switch and blower fan switch OFF.
2. Turn ignition switch OFF.
3. Loosen and retighten ground screws on the body.
   Refer to EC-548, "Ground Inspection" .

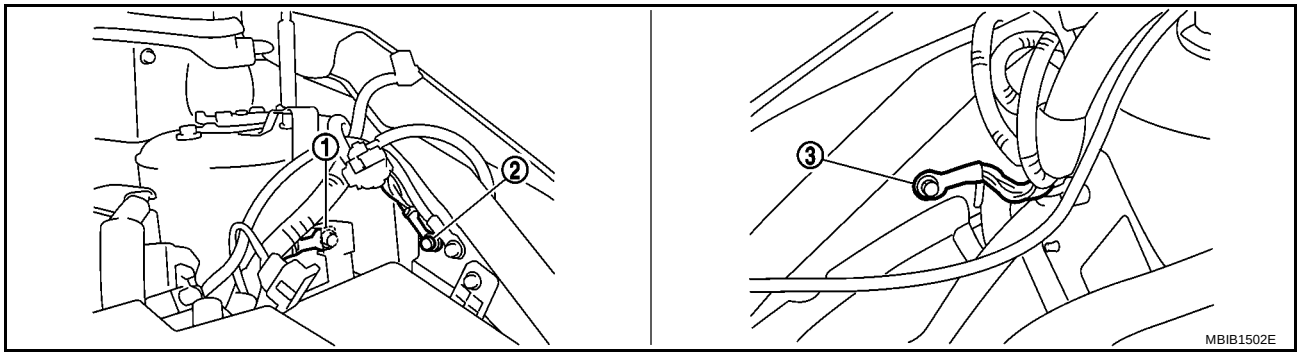

1. Body ground E44
2. Body ground E45
3. Body ground E28

OK or NG

OK >> GO TO 3.
NG >> Repair or replace ground connections.

3. CHECK REFRIGERANT PRESSURE SENSOR POWER SUPPLY CIRCUIT

1. Disconnect refrigerant pressure sensor (1) harness connector.
2. Turn ignition switch ON.

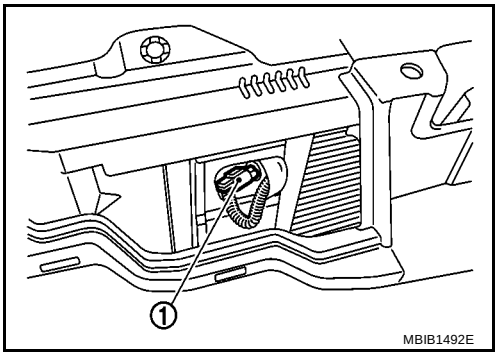

3. Check voltage between refrigerant pressure sensor terminal 3 and ground with CONSULT-II or tester.

Voltage: Approximately 5V

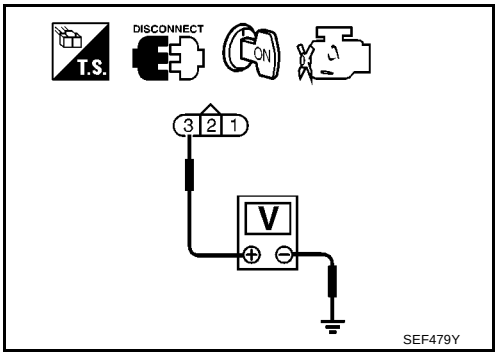

OK or NG

OK >> GO TO 5.
NG >> GO TO 4.

4. DETECT MALFUNCTIONING PART

Check the following.

- Harness connectors E48, F1
- Harness for open or short between ECM and refrigerant pressure sensor

>> Repair harness or connectors.

5. CHECK REFRIGERANT PRESSURE SENSOR GROUND CIRCUIT FOR OPEN AND SHORT

1. Turn ignition switch OFF.
2. Disconnect ECM harness connector.
3. Check harness continuity between ECM terminal 57 and refrigerant pressure sensor terminal 1. Refer to Wiring Diagram.

Continuity should exist.

4. Also check harness for short to ground and short to power.

OK or NG

OK >> GO TO 7.
NG >> GO TO 6.

6. DETECT MALFUNCTIONING PART

Check the following.

- Harness connectors E48, F1
- Harness for open or short between ECM and refrigerant pressure sensor

>> Repair open circuit or short to ground or short to power in harness or connectors.

7. CHECK REFRIGERANT PRESSURE SENSOR INPUT SIGNAL CIRCUIT FOR OPEN AND SHORT

1. Check harness continuity between ECM terminal 69 and refrigerant pressure sensor terminal 2. Refer to Wiring Diagram.

   Continuity should exist.

2. Also check harness for short to ground and short to power.

OK or NG

OK >> GO TO 9.
NG >> GO TO 8.

8. DETECT MALFUNCTIONING PART

Check the following.

- Harness connectors E48, F1
- Harness for open or short between ECM and refrigerant pressure sensor

>> Repair open circuit or short to ground or short to power in harness or connectors.

9. CHECK INTERMITTENT INCIDENT

Refer to EC-542, "TROUBLE DIAGNOSIS FOR INTERMITTENT INCIDENT" .

OK or NG

OK >> Replace refrigerant pressure sensor.
NG >> Repair or replace.

Removal and Installation

BBS003D7

REFRIGERANT PRESSURE SENSOR

Refer to ATC-142, "Removal and Installation for Refrigerant Pressure Sensor" (Models with A/C) or MTC-88, "Removal and Installation for Refrigerant Pressure Sensor" .

VSS

PFP:32702

Description

BBS003CQ

The vehicle speed signal is sent to the combination meter from the “ABS actuator and electric unit (control unit)” through CAN communication line. The combination meter then sends a signal to the ECM through CAN communication line.

Diagnostic Procedure

BBS003CR

1. INSPECTION START

Do you have CONSULT-II?

Yes or No

Yes >> GO TO 2.
No >> GO TO 3.

2. CHECK OVERRALL FUNCTION

1. Turn ignition switch OFF.
2. Lift up the vehicle.
3. Start engine and let it idle
4. Select “VHCL SPEED SE” in“DATA MONITOR” mode with CONSULT-II.
5. Select “VHCL SPEED SE” indication when rotating wheels with suitable gear position.

“VHCL SPEED SE” indication should exceed 10km/h (6MPH).

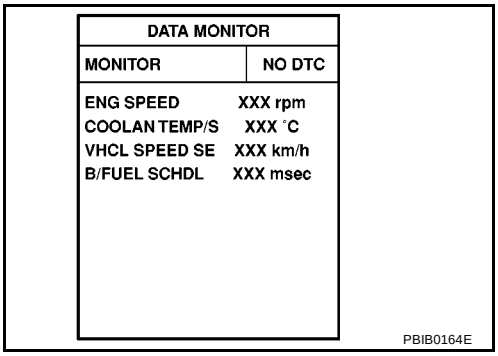

OK or NG

OK >> **INSPECTION END**.
NG >> GO TO 3.

3. CHECK DTC WITH “ABS ACTUATOR AND ELECTRIC UNIT (CONTROL UNIT)”

Refer to BRC-8, "TROUBLE DIAGNOSIS" (models without ESP) or BRC-49, "TROUBLE DIAGNOSIS" (models with ESP).

OK or NG

OK >> GO TO 4.
NG >> Repair or replace.

4. CHECK COMBINATION METER

Check combination meter function.
Refer to DI-4, "COMBINATION METERS" .

>> **INSPECTION END**

MI & DATA LINK CONNECTORS

PFP:24814

Wiring Diagram

BBS003DB

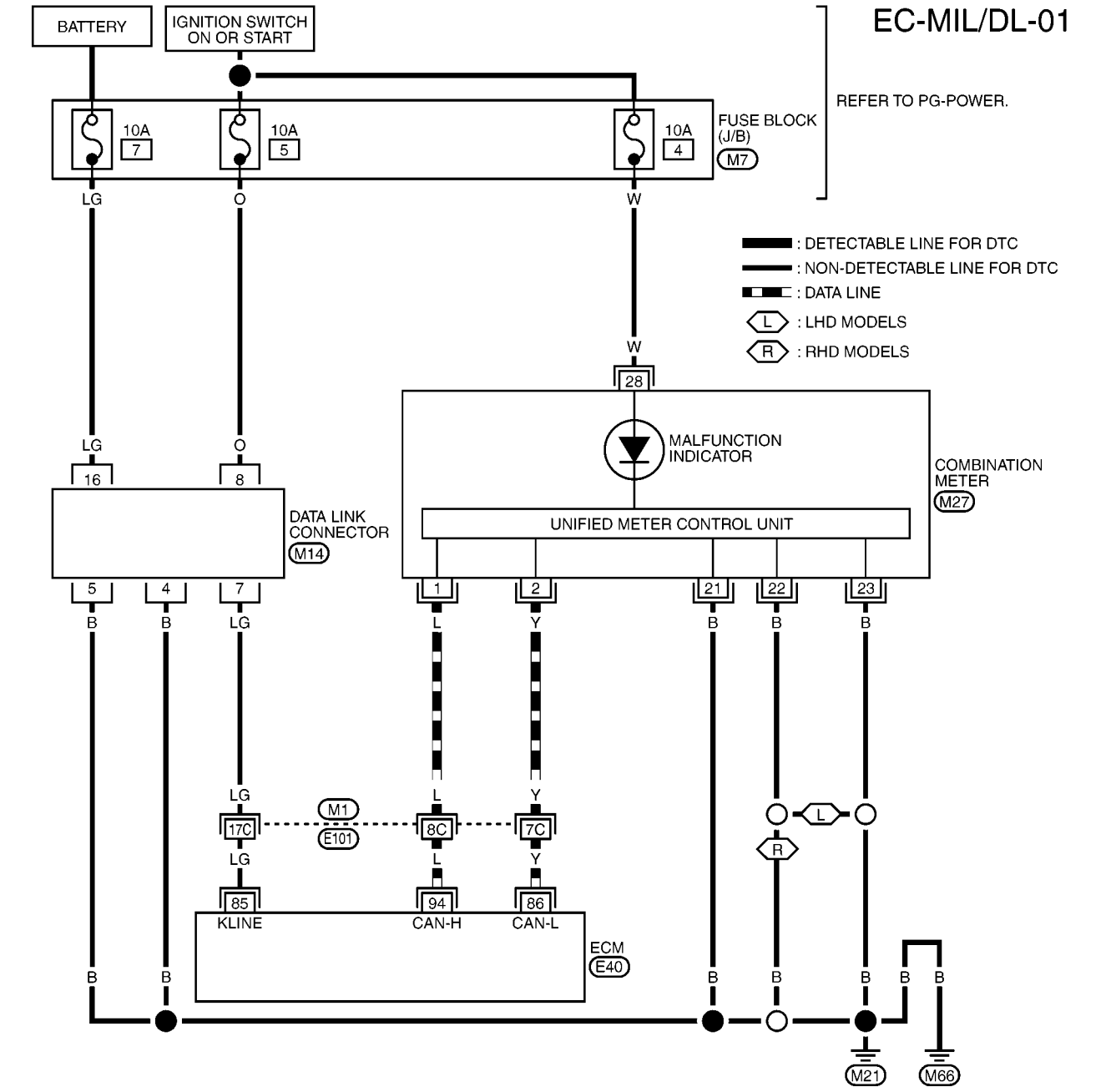

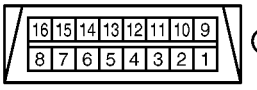

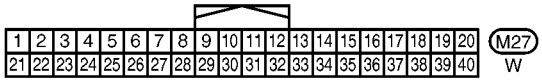

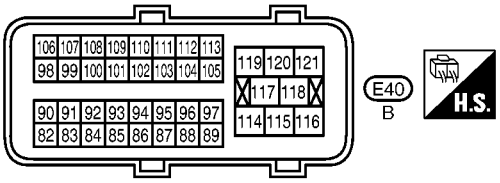

REFER TO THE FOLLOWING.
M1 - SUPER MULTIPLE JUNCTION (SMJ)
M7 - FUSE BLOCK - JUNCTION BOX (J/B)

MBWA1541E

SERVICE DATA AND SPECIFICATIONS (SDS)

PFP:00030

Fuel Pressure

BBS0048B

Fuel pressure at idle	Approximately 350 kPa (3.5bar, 3.57kg/cm^2 , 51psi)

Idle Speed

BBS0048C

Target idle speed	No load* (in Neutral position)	650 ± 50 rpm
Air conditioner: ON	In Neutral position	900 rpm or more

*: Under the following conditions:

- Air conditioner switch: OFF
- Electric load: OFF (Lights, heater fan & rear window defogger)
- Steering wheel: Kept in straight-ahead position

Manifold Absolute Pressure Sensor

BBS0048E

Supply voltage	Approximately 5.0V
Output voltage at idle	1.4 – 1.5 V*

*: Engine is warmed up to normal operating temperature and running under no load.

Intake Air Temperature Sensor

BBS0048F

Temperature °C (°F)	Resistance kΩ
25 (77)	1.9 – 2.1

Engine Coolant Temperature Sensor

BBS0048G

Temperature °C (°F)	Resistance kΩ
20 (68)	2.1 – 2.9
50 (122)	0.68 – 1.00
90 (194)	0.236 – 0.260

Knock Sensor

BBS0048H

Resistance [at 20°C (68°F)]	Approximately 530 – 590kΩ

Crankshaft Position Sensor (POS)

BBS0048I

Refer to EC-615, "Component Inspection" .

Camshaft Position Sensor (PHASE)

BBS0048J

Refer to EC-622, "Component Inspection" .

Heated Oxygen Sensor 1 Heater

BBS0048K

Resistance [at 25°C (77°F)]	3.4 – 4.4Ω

Heated Oxygen Sensor 2 Heater

BBS0048L

Resistance [at 25°C (77°F)]	8.0 – 10.0Ω

Intake Valve Timing Control Solenoid Valve

BBS0048M

Resistance [at 20°C (68°F)]	6.7 – 7.7Ω

Throttle Control Motor

BBS0048N

Resistance [at 25°C (77°F)]	Approximately 1 – 15Ω

Fuel Injector

BBS0048O

Resistance [at 10 - 60°C (50 - 140°F)]	10.4 – 15.3Ω

Fuel Pump

BBS0048P

Resistance [at 25°C (77°F)]	Approximately 0.2 – 5.0Ω

INDEX FOR DTC

PFP:00024

DTC No. Index

BBS0048Q

NOTE:

- **If DTC U1000 or U1001 is displayed with other DTC, first perform the trouble diagnosis for DTC U1000, U1001. Refer to EC-925, "DTC U1000, U1001 CAN COMMUNICATION LINE" .**
- **If DTC U1010 is displayed with other DTC, first perform the trouble diagnosis for DTC U1010. Refer to EC-928, "DTC U1010 CAN COMMUNICATION" .**

DTC*1		Items (CONSULT-II screen terms)	Reference page
CONSULT-II GST*2	ECM*3		
U1000	1000*4	CAN COMM CIRCUIT	EC-925
U1001	1001*4	CAN COMM CIRCUIT	EC-925
U1010	1010	CONTROL UNIT(CAN)	EC-928
P0000	Flashing*5	NO DTC IS DETECTED. FURTHER TESTING MAY BE REQUIRED.	EC-844
P0000	**0000**	**NO DTC IS DETECTED. FURTHER TESTING MAY BE REQUIRED.**	**—**
P0011	0011	INT/V TIM CONT-B1	EC-930
P0102	0102	MAF SEN/CIRCUIT	EC-935
P0103	0103	MAF SEN/CIRCUIT	EC-935
P0112	0112	IAT SEN/CIRCUIT	EC-942
P0113	0113	IAT SEN/CIRCUIT	EC-942
P0117	0117	ECT SEN/CIRC	EC-947
P0118	0118	ECT SEN/CIRC	EC-947
P0122	0122	TP SEN 2/CIRC	EC-953
P0123	0123	TP SEN 2/CIRC	EC-953
P0132	0132	HO2S1 (B1)	EC-959
P0133	0133	HO2S1 (B1)	EC-967
P0134	0134	HO2S1 (B1)	EC-977
P0135	0135	HO2S1 HTR (B1)	EC-985
P0138	0138	HO2S2 (B1)	EC-991
P0139	0139	HO2S2 (B1)	EC-998
P0141	0141	HO2S2 HTR (B1)	EC-1006
P0171	0171	FUEL SYS-LEAN-B1	EC-1012
P0172	0172	FUEL SYS-RICH-B1	EC-1019
P0222	0222	TP SEN 1/CIRC	EC-1026
P0223	0223	TP SEN 1/CIRC	EC-1026
P0300	0300	MULTI CYL MISFIRE	EC-1032
P0301	0301	CYL 1 MISFIRE	EC-1032
P0302	0302	CYL 2 MISFIRE	EC-1032
P0303	0303	CYL 3 MISFIRE	EC-1032
P0304	0304	CYL 4 MISFIRE	EC-1032
P0327	0327	KNOCK SEN/CIRC-B1	EC-1038
P0328	0328	KNOCK SEN/CIRC-B1	EC-1038
P0335	0335	CKP SEN/CIRCUIT	EC-1042

DTC*1		Items (CONSULT-II screen terms)	Reference page
CONSULT-II GST*2	ECM*3		
P0340	0340	CMP SEN/CIRC-B1	EC-1049
P0420	0420	TW CATALYST SYS-B1	EC-1056
P0444	0444	PURG VOLUME CONT/V	EC-1063
P0500	0500	VEH SPEED SEN/CIRC*6	EC-1070
P0605	0605	ECM	EC-1072
P0705	0705	PNP SW/CIRC	AT-105
P0710	0710	ATF TEMP SEN/CIRC	AT-110
P0720	0720	VEH SPD SEN/CIR AT*6	AT-115
P0725	0725	ENGINE SPEED SIG	AT-121
P0731	0731	A/T 1ST GR FNCTN	AT-125
P0732	0732	A/T 2ND GR FNCTN	AT-129
P0733	0733	A/T 3RD GR FNCTN	AT-132
P0734	0734	A/T 4TH GR FNCTN	AT-136
P0740	0740	TCC SOLENOID/CIRC	AT-142
P0744	0744	A/T TCC S/V FNCTN	AT-147
P0745	0745	L/PRESS SOL/CIRC	AT-153
P0750	0750	SFT SOL A/CIRC	AT-159
P0755	0755	SFT SOL B/CIRC	AT-164
P1065	1065	ECM BACK UP/CIRCUIT*7	EC-1075
P1111	1111	INT/V TIM V/CIR-B1	EC-1077
P1121	1121	ETC ACTR	EC-1082
P1122	1122	ETC FUNCTION/CIRC	EC-1084
P1124	1124	ETC MOT PWR	EC-1090
P1126	1126	ETC MOT PWR	EC-1090
P1128	1128	ETC MOT	EC-1096
P1143	1143	HO2S1 (B1)	EC-1101
P1144	1144	HO2S1 (B1)	EC-1107
P1146	1146	HO2S2 (B1)	EC-1113
P1147	1147	HO2S2 (B1)	EC-1121
P1212	1212	TCS/CIRC	EC-1129
P1217	1217	ENG OVER TEMP	EC-1130
P1225	1225	CTP LEARNING	EC-1146
P1226	1226	CTP LEARNING	EC-1148
P1229	1229	SENSOR POWER/CIRC	EC-1150
P1610 - P1615	1610 - 1615	NATS MALFUNCTION	BL-215
P1705	1705	TP SEN/CIRC A/T	AT-169
P1706	1706	P-N POS SW/CIRCUIT	EC-1158
P1760	1760	O/R CLTCH SOL/CIRC	AT-171
P1805	1805	BRAKE SW/CIRCUIT	EC-1167
P2122	2122	APP SEN 1/CIRC	EC-1172
P2123	2123	APP SEN 1/CIRC	EC-1172
P2127	2127	APP SEN 2/CIRC	EC-1181

DTC*1		Items (CONSULT-II screen terms)	Reference page
CONSULT-II GST*2	ECM*3		
P2128	2128	APP SEN 2/CIRC	EC-1181
P2135	2135	TP SENSOR	EC-1191
P2138	2138	APP SENSOR	EC-1197

*1: 1st trip DTC No. is the same as DTC No.
*2: This number is prescribed by ISO 15031-5.
*3: In Diagnostic Test Mode II (Self-diagnostic results), this number is controlled by NISSAN.
*4: The troubleshooting for this DTC needs CONSULT-II.
*5: When engine is running, MI may flash. For details, refer to EC-844, "MI Flashing Without DTC" .
*6: When the fail-safe operations for both self-diagnoses occur, the MI illuminates.
*7:This self-diagnosis is not for ECM power supply circuit, even though “ECM BACK UP/CIRCUIT” is displayed on CONSULT-II screen.

Alphabetical Index

BBS0048R

NOTE:

- **If DTC U1000 or U1001 is displayed with other DTC, first perform the trouble diagnosis for DTC U1000, U1001. Refer to EC-925, "DTC U1000, U1001 CAN COMMUNICATION LINE" .**
- **If DTC U1010 is displayed with other DTC, first perform the trouble diagnosis for DTC U1010. Refer to EC-928, "DTC U1010 CAN COMMUNICATION" .**

Items (CONSULT-II screen terms)	DTC*1		Reference page
	CONSULT-II GST*2	ECM*3	
A/T 1ST GR FNCTN	P0731	0731	AT-125
A/T 2ND GR FNCTN	P0732	0732	AT-129
A/T 3RD GR FNCTN	P0733	0733	AT-132
A/T 4TH GR FNCTN	P0734	0734	AT-136
A/T TCC S/V FNCTN	P0744	0744	AT-147
APP SEN 1/CIRC	P2122	2122	EC-1172
APP SEN 1/CIRC	P2123	2123	EC-1172
APP SEN 2/CIRC	P2127	2127	EC-1181
APP SEN 2/CIRC	P2128	2128	EC-1181
APP SENSOR	P2138	2138	EC-1197
ATF TEMP SEN/CIRC	P0710	0710	AT-110
BRAKE SW/CIRCUIT	P1805	1805	EC-1167
CAN COMM CIRCUIT	U1000	1000*4	EC-925
CAN COMM CIRCUIT	U1001	1001*4	EC-925
CONTROL UNIT(CAN)	U1010	1010	EC-928
CKP SEN/CIRCUIT	P0335	0335	EC-1042
CMP SEN/CIRC-B1	P0340	0340	EC-1049
CTP LEARNING	P1225	1225	EC-1146
CTP LEARNING	P1226	1226	EC-1148
CYL 1 MISFIRE	P0301	0301	EC-1032
CYL 2 MISFIRE	P0302	0302	EC-1032
CYL 3 MISFIRE	P0303	0303	EC-1032
CYL 4 MISFIRE	P0304	0304	EC-1032
ECM	P0605	0605	EC-1072
ECM BACK UP/CIRCUIT*7	P1065	1065	EC-1075
ECT SEN/CIRC	P0117	0117	EC-947
ECT SEN/CIRC	P0118	0118	EC-947
ENG OVER TEMP	P1217	1217	EC-1130
ENGINE SPEED SIG	P0725	0725	AT-121
ETC ACTR	P1121	1121	EC-1082
ETC FUNCTION/CIRC	P1122	1122	EC-1084
ETC MOT	P1128	1128	EC-1096
ETC MOT PWR	P1124	1124	EC-1090
ETC MOT PWR	P1126	1126	EC-1090
FUEL SYS-LEAN-B1	P0171	0171	EC-1012
FUEL SYS-RICH-B1	P0172	0172	EC-1019

Items (CONSULT-II screen terms)	DTC*1		Reference page
	CONSULT-II GST*2	ECM*3	
HO2S1 (B1)	P0132	0132	EC-959
HO2S1 (B1)	P0133	0133	EC-967
HO2S1 (B1)	P0134	0134	EC-977
HO2S1 (B1)	P1143	1143	EC-1101
HO2S1 (B1)	P1144	1144	EC-1107
HO2S1 HTR (B1)	P0135	0135	EC-985
HO2S2 (B1)	P0138	0138	EC-991
HO2S2 (B1)	P0139	0139	EC-998
HO2S2 (B1)	P1146	1146	EC-1113
HO2S2 (B1)	P1147	1147	EC-1121
HO2S2 HTR (B1)	P0141	0141	EC-1006
IAT SEN/CIRCUIT	P0112	0112	EC-942
IAT SEN/CIRCUIT	P0113	0113	EC-942
INT/V TIM CONT-B1	P0011	0011	EC-930
INT/V TIM V/CIR-B1	P1111	1111	EC-1077
KNOCK SEN/CIRC-B1	P0327	0327	EC-1038
KNOCK SEN/CIRC-B1	P0328	0328	EC-1038
L/PRESS SOL/CIRC	P0745	0745	AT-153
MAF SEN/CIRCUIT	P0102	0102	EC-935
MAF SEN/CIRCUIT	P0103	0103	EC-935
MULTI CYL MISFIRE	P0300	0300	EC-1032
NATS MALFUNCTION	P1610 - P1615	1610 - 1615	BL-215
NO DTC IS DETECTED. FURTHER TESTING MAY BE REQUIRED.	No DTC	Flashing*5	EC-844
NO DTC IS DETECTED. FURTHER TESTING MAY BE REQUIRED.	**P0000**	**0000**	**—**
O/R CLTCH SOL/CIRC	P1760	1760	AT-171
P-N POS SW/CIRCUIT	P1706	1706	EC-1158
PNP SW/CIRC	P0705	0705	AT-105
PURG VOLUME CONT/V	P0444	0444	EC-1063
SENSOR POWER/CIRC	P1229	1229	EC-1150
SFT SOL A/CIRC	P0750	0750	AT-159
SFT SOL B/CIRC	P0755	0755	AT-164
TCC SOLENOID/CIRC	P0740	0740	AT-142
TCS/CIRC	P1212	1212	EC-1129
TP SEN 1/CIRC	P0222	0222	EC-1026
TP SEN 1/CIRC	P0223	0223	EC-1026
TP SEN 2/CIRC	P0122	0122	EC-953
TP SEN 2/CIRC	P0123	0123	EC-953
TP SENSOR	P2135	2135	EC-1191
TP SEN/CIRC A/T	P1705	1705	AT-169
TW CATALYST SYS-B1	P0420	0420	EC-1056

Items (CONSULT-II screen terms)	DTC*1		Reference page
	CONSULT-II GST*2	ECM*3	
VEH SPD SEN/CIR AT*6	P0720	0720	AT-115
VEH SPEED SEN/CIRC*6	P0500	0500	EC-1070

*1: 1st trip DTC No. is the same as DTC No.
*2: This number is prescribed by ISO 15031-5.
*3: In Diagnostic Test Mode II (Self-diagnostic results), this number is controlled by NISSAN.
*4: The troubleshooting for this DTC needs CONSULT-II.
*5: When engine is running, MI may flash. For details, refer to EC-844, "MI Flashing Without DTC" .
*6: When the fail-safe operation for both self-diagnoses occur, the MI illuminates.
*7:This self-diagnosis is not for ECM power supply circuit, even though “ECM BACK UP/CIRCUIT” is displayed on CONSULT-II screen.

PRECAUTIONS

PFP:00001

Precautions for Supplemental Restraint System (SRS) “AIR BAG” and “SEAT BELT PRE-TENSIONER”

BBS0048S

The Supplemental Restraint System such as “AIR BAG” and “SEAT BELT PRE-TENSIONER”, used along with a front seat belt, helps to reduce the risk or severity of injury to the driver and front passenger for certain types of collision. Information necessary to service the system safely is included in the SRS and SB section of this Service Manual.

WARNING:

- **To avoid rendering the SRS inoperative, which could increase the risk of personal injury or death in the event of a collision which would result in air bag inflation, all maintenance must be performed by an authorized NISSAN/INFINITI dealer.**
- **Improper maintenance, including incorrect removal and installation of the SRS, can lead to personal injury caused by unintentional activation of the system. For removal of Spiral Cable and Air Bag Module, see the SRS section.**
- **Do not use electrical test equipment on any circuit related to the SRS unless instructed to in this Service Manual. SRS wiring harnesses can be identified by yellow and/or orange harnesses or harness connectors.**

Maintenance Information

BBS005AS

If any of following part is replaced, always replace with new* one.
If it's not (or fail to do so), the electrical system may not be operated properly.
*: New one means a virgin control unit that has never been energized on-board.

RHD MODELS

- BCM (Models without Intelligent Key system)
- Intelligent Key unit (Models with Intelligent Key system)
- ECM
- IPDM E/R
- Combination meter
- EPS control unit

LHD MODELS

- BCM (Models without Intelligent Key system)
- Intelligent Key unit (Models with Intelligent Key system)
- ECM

Precautions for Procedures without Cowl Top Cover

BBS00583

When performing the procedure after removing cowl top cover, cover the lower end of windshield with urethane, etc.

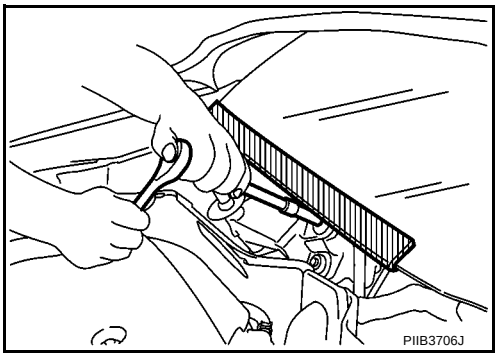

On Board Diagnostic (OBD) System of Engine and A/T

BBS0048U

The ECM has an on board diagnostic system. It will light up the malfunction indicator (MI) to warn the driver of a malfunction causing emission deterioration.

CAUTION:

- **Be sure to turn the ignition switch OFF and disconnect the negative battery cable before any repair or inspection work. The open/short circuit of related switches, sensors, solenoid valves, etc. will cause the MI to light up.**

- **Be sure to connect and lock the connectors securely after work. A loose (unlocked) connector will cause the MI to light up due to the open circuit. (Be sure the connector is free from water, grease, dirt, bent terminals, etc.)**
- **Certain systems and components, especially those related to OBD, may use a new style slide-locking type harness connector. For description and how to disconnect, refer to PG-88, "HARNESS CONNECTOR" .**
- **Be sure to route and secure the harnesses properly after work. The interference of the harness with a bracket, etc. may cause the MI to light up due to the short circuit.**
- **Be sure to connect rubber tubes properly after work. A misconnected or disconnected rubber tube may cause the MI to light up due to the malfunction of the fuel injection system, etc.**
- **Be sure to erase the unnecessary malfunction information (repairs completed) from the ECM and TCM (Transmission control module) before returning the vehicle to the customer.**

Precaution

BBS0048V

- **Always use a 12 volt battery as power source.**
- **Do not attempt to disconnect battery cables while engine is running.**
- **Before connecting or disconnecting the ECM harness connector, turn ignition switch OFF and disconnect negative battery cable. Failure to do so may damage the ECM because battery voltage is applied to ECM even if ignition switch is turned OFF.**
- **Before removing parts, turn ignition switch OFF and then disconnect negative battery cable.**

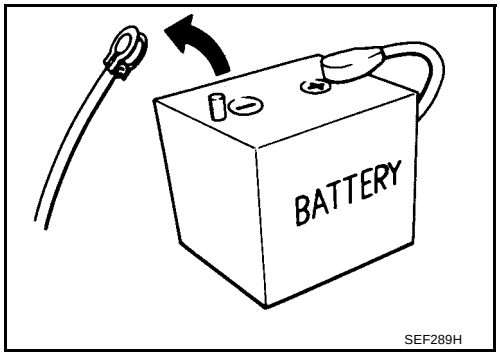

SEF289H

- **Do not disassemble ECM.**
- **If a battery cable is disconnected, the memory will return to the ECM value.**
  The ECM will now start to self-control at its initial value. Engine operation can vary slightly when the terminal is disconnected. However, this is not an indication of a malfunction. Do not replace parts because of a slight variation.
- **If the battery is disconnected, the following emission-related diagnostic information will be lost within 24 hours.**
  - **Diagnostic trouble codes**
  - **1st trip diagnostic trouble codes**
  - **Freeze frame data**
  - **1st trip freeze frame data**
  - **System readiness test (SRT) codes**
  - **Test values**

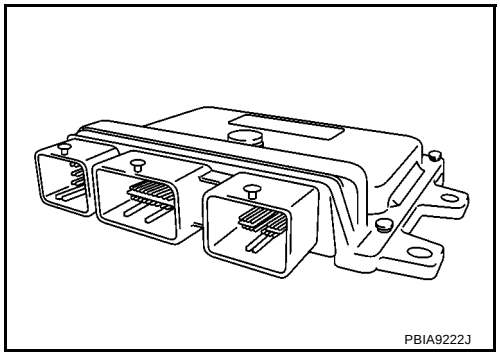
PBIA9222J

- **When connecting ECM harness connector, fasten (B) it securely with a lever (1) as far as it will go as shown in the figure.**
  - ECM (2)
  - Loosen (A)

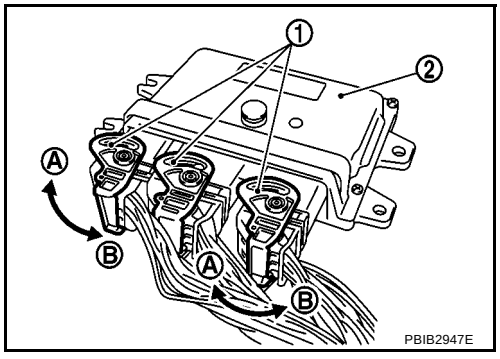

PBIB2947E

- When connecting or disconnecting pin connectors into or from ECM, take care not to damage pin terminals (bend or break).
  Make sure that there are not any bends or breaks on ECM pin terminal, when connecting pin connectors.

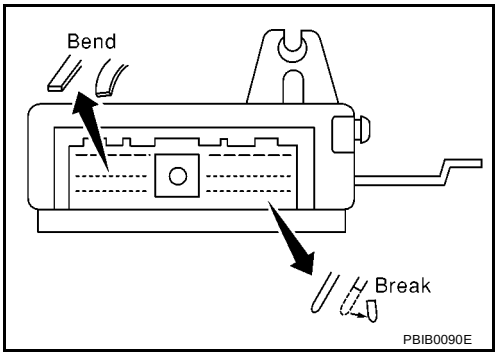

- Securely connect ECM harness connectors.
  A poor connection can cause an extremely high (surge) voltage to develop in coil and condenser, thus resulting in damage to ICs.
- Keep engine control system harness at least 10 cm (4 in) away from adjacent harness, to prevent engine control system malfunctions due to receiving external noise, degraded operation of ICs, etc.
- Keep engine control system parts and harness dry.
- Before replacing ECM, perform ECM Terminals and Reference Value inspection and make sure ECM functions properly. Refer to EC-883, "ECM Terminals and Reference Value".

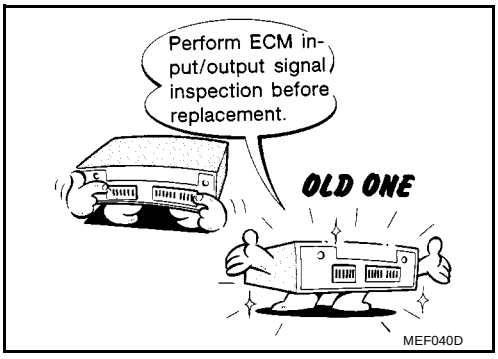

- Handle mass air flow sensor carefully to avoid damage.
- Do not clean mass air flow sensor with any type of detergent.
- Do not disassemble electric throttle control actuator.
- Even a slight leak in the air intake system can cause serious incidents.
- Do not shock or jar the camshaft position sensor (PHASE), crankshaft position sensor (POS).
- After performing each TROUBLE DIAGNOSIS, perform DTC Confirmation Procedure or Overall Function Check.
  The DTC should not be displayed in the DTC Confirmation Procedure if the repair is completed. The Overall Function Check should be a good result if the repair is completed.

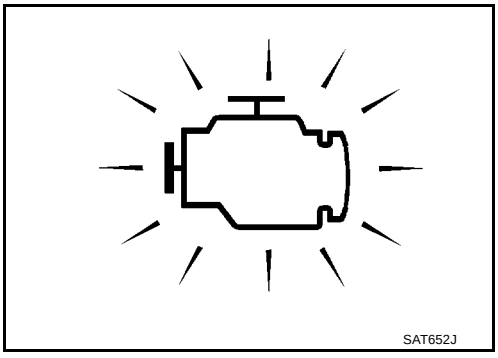

- **When measuring ECM signals with a circuit tester, never allow the two tester probes to contact.**
  Accidental contact of probes will cause a short circuit and damage the ECM power transistor.
- **Do not use ECM ground terminals when measuring input/output voltage. Doing so may result in damage to the ECM's transistor. Use a ground other than ECM terminals, such as the ground.**

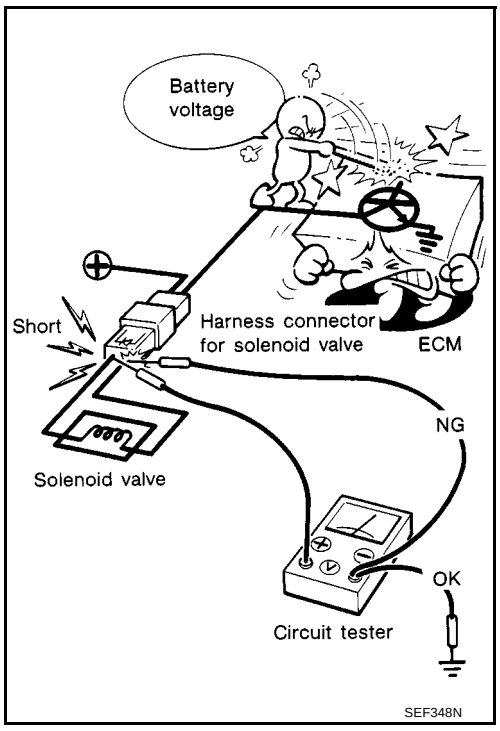

- **Do not operate fuel pump when there is no fuel in lines.**
- **Tighten fuel hose clamps to the specified torque.**

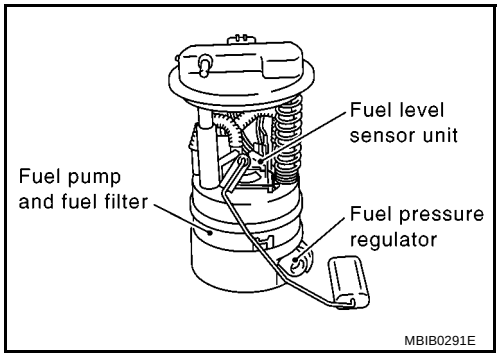

- **Do not depress accelerator pedal when starting.**
- **Immediately after starting, do not rev up engine unnecessarily.**
- **Do not rev up engine just prior to shutdown.**

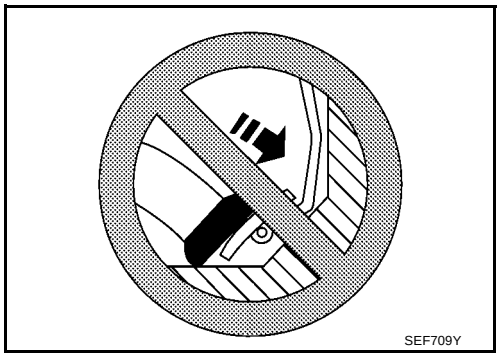

- **When installing C.B. ham radio or a mobile phone, be sure to observe the following as it may adversely affect electronic control systems depending on installation location.**
  - **Keep the antenna as far as possible from the electronic control units.**
  - **Keep the antenna feeder line more than 20 cm (8 in) away from the harness of electronic controls.**
    Do not let them run parallel for a long distance.
  - **Adjust the antenna and feeder line so that the standing-wave radio can be kept smaller.**

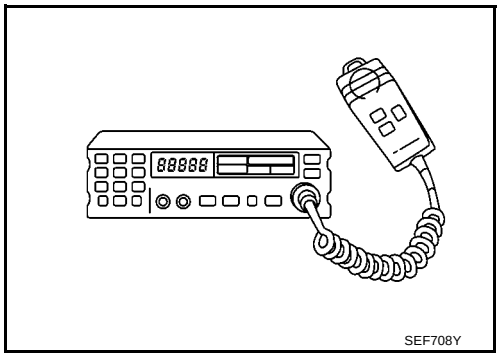

- **Be sure to ground the radio to vehicle body.**

PREPARATION

PFP:00002

Special Service Tools

BBS0048W

Tool number Tool name		Description
KV10117100 Heated oxygen sensor wrench	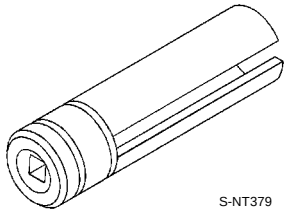	Loosening or tightening heated oxygen sensor with 22 mm (0.87 in) hexagon nut
KV10114400 Heated oxygen sensor wrench	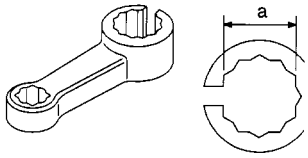	Loosening or tightening heated oxygen sensor **a: 22 mm (0.87 in)**
EG17650301 Radiator cap tester adapter	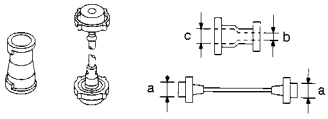	Adapting radiator cap tester to radiator cap and radiator filler neck **a: 28 (1.10) dia.** **b: 31.4 (1.236) dia.** **c: 41.3 (1.626) dia.** Unit: mm (in)
EG17550000 Break-out box	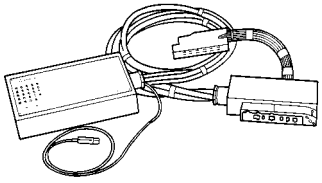	Measuring ECM signals with a circuit tester
EG17680000 Y-cable adapter	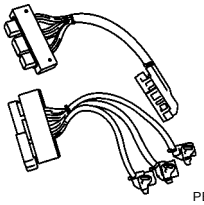	Measuring ECM signals with a circuit tester
KV10118400 Fuel tube adapter	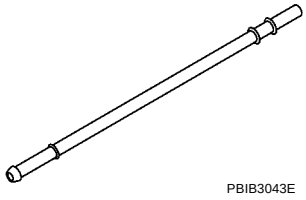	Measuring fuel pressure

Commercial Service Tools

BBS0048X

Tool name		Description
Quick connector release	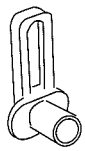 PBIC0198E	Removing fuel tube quick connectors in engine room (Available in SEC. 164 of PARTS CATALOG: Part No. 16441 6N210)
Fuel filler cap adapter	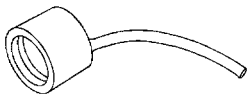 S-NT653	Checking fuel tank vacuum relief valve opening pressure
Socket wrench	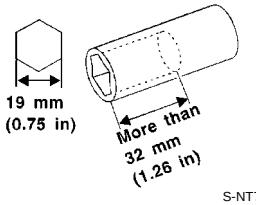 S-NT705	Removing and installing engine coolant temperature sensor
Oxygen sensor thread cleaner	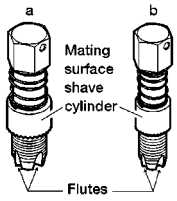 AEM488	Reconditioning the exhaust system threads before installing a new oxygen sensor. Use with anti-seize lubricant shown below. **a: 18 mm diameter with pitch 1.5 mm for Zirconia Oxygen Sensor** **b: 12 mm diameter with pitch 1.25 mm for Titania Oxygen Sensor**
Anti-seize lubricant i.e.: (Permatex™ 133AR or equivalent meeting MIL specification MIL-A-907)	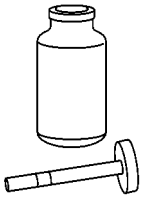 S-NT779	Lubricating oxygen sensor thread cleaning tool when reconditioning exhaust system threads.

ENGINE CONTROL SYSTEM

PFP:23710

System Diagram

BBS0048Y

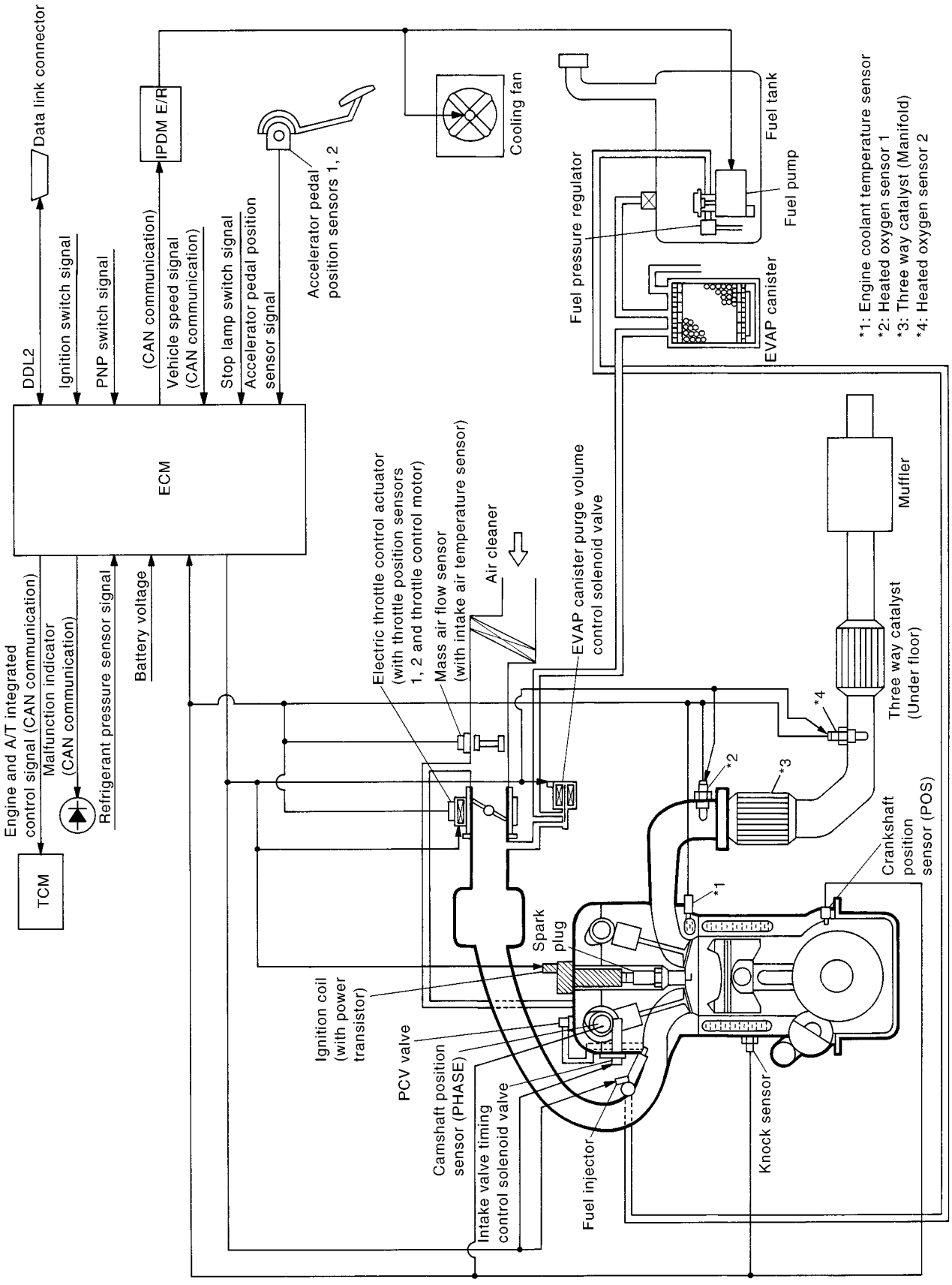

MBIB1449E

Multiport Fuel Injection (MFI) System

BBS0048Z

INPUT/OUTPUT SIGNAL CHART

Sensor	Input Signal to ECM	ECM function	Actuator
Crankshaft position sensor (POS)	Engine speed*3 Piston position	Fuel injection & mixture ratio control	Fuel injector
Camshaft position sensor (PHASE)			
Mass air flow sensor	Amount of intake air		
Engine coolant temperature sensor	Engine coolant temperature		
Heated oxygen sensor 1	Density of oxygen in exhaust gas		
Throttle position sensor	Throttle position		
Accelerator pedal position sensor	Accelerator pedal position		
Park/neutral position (PNP) switch	Gear position		
Battery	Battery voltage*3		
Knock sensor	Engine knocking condition		
EPS control unit	Power steering operation*2		
Heated oxygen sensor 2*1	Density of oxygen in exhaust gas		
Air conditioner switch	Air conditioner operation*2		
Wheel sensor	Vehicle speed*2		

*1: This sensor is not used to control the engine system under normal conditions.
*2: This signal is sent to the ECM through CAN communication line.
*3: ECM determines the start signal status by the signals of engine speed and battery voltage.

SYSTEM DESCRIPTION

The amount of fuel injected from the fuel injector is determined by the ECM. The ECM controls the length of time the valve remains open (injection pulse duration). The amount of fuel injected is a program value in the ECM memory. The program value is preset by engine operating conditions. These conditions are determined by input signals (for engine speed and intake air) from the crankshaft position sensor (POS), camshaft position sensor (PHASE) and the mass air flow sensor.

VARIOUS FUEL INJECTION INCREASE/DECREASE COMPENSATION

In addition, the amount of fuel injected is compensated to improve engine performance under various operating conditions as listed below.

<Fuel increase>

- During warm-up
- When starting the engine
- During acceleration
- Hot-engine operation
- When shift lever is changed from N to D (A/T models)
- High-load, high-speed operation

<Fuel decrease>

- During deceleration
- During high engine speed operation

MIXTURE RATIO FEEDBACK CONTROL (CLOSED LOOP CONTROL)

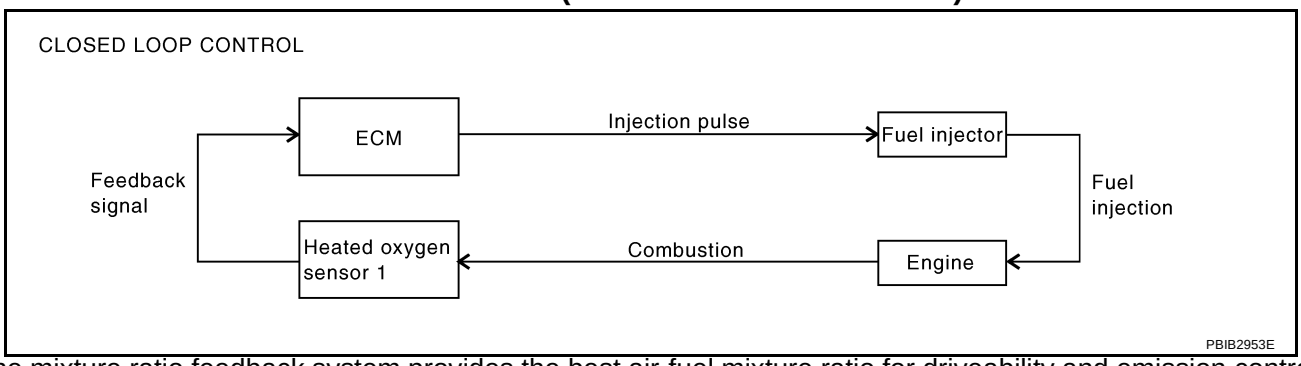

The mixture ratio feedback system provides the best air-fuel mixture ratio for driveability and emission control. The three way catalyst (manifold) can then better reduce CO, HC and NOx emissions. This system uses heated oxygen sensor 1 in the exhaust manifold to monitor whether the engine operation is rich or lean. The ECM adjusts the injection pulse width according to the sensor voltage signal. For more information about heated oxygen sensor 1, refer to EC-967, "DTC P0133 HO2S1" . This maintains the mixture ratio within the range of stoichiometric (ideal air-fuel mixture).
This stage is referred to as the closed loop control condition.
Heated oxygen sensor 2 is located downstream of the three way catalyst (manifold). Even if the switching characteristics of heated oxygen sensor 1 shift, the air-fuel ratio is controlled to stoichiometric by the signal from heated oxygen sensor 2.

Open Loop Control

The open loop system condition refers to when the ECM detects any of the following conditions. Feedback control stops in order to maintain stabilized fuel combustion.

- Deceleration and acceleration
- High-load, high-speed operation
- Malfunction of heated oxygen sensor 1 or its circuit
- Insufficient activation of heated oxygen sensor 1 at low engine coolant temperature
- High engine coolant temperature
- During warm-up
- After shifting from N to D (A/T models)
- When starting the engine

MIXTURE RATIO SELF-LEARNING CONTROL

The mixture ratio feedback control system monitors the mixture ratio signal transmitted from heated oxygen sensor 1. This feedback signal is then sent to the ECM. The ECM controls the basic mixture ratio as close to the theoretical mixture ratio as possible. However, the basic mixture ratio is not necessarily controlled as originally designed. Both manufacturing differences (i.e., mass air flow sensor hot wire) and characteristic changes during operation (i.e., fuel injector clogging) directly affect mixture ratio.
Accordingly, the difference between the basic and theoretical mixture ratios is monitored in this system. This is then computed in terms of “injection pulse duration” to automatically compensate for the difference between the two ratios.
“Fuel trim” refers to the feedback compensation value compared against the basic injection duration. Fuel trim includes short term fuel trim and long term fuel trim.
“Short term fuel trim” is the short-term fuel compensation used to maintain the mixture ratio at its theoretical value. The signal from heated oxygen sensor 1 indicates whether the mixture ratio is RICH or LEAN compared to the theoretical value. The signal then triggers a reduction in fuel volume if the mixture ratio is rich, and an increase in fuel volume if it is lean.
“Long term fuel trim” is overall fuel compensation carried out long-term to compensate for continual deviation of the short term fuel trim from the central value. Such deviation will occur due to individual engine differences, wear over time and changes in the usage environment.

FUEL INJECTION TIMING

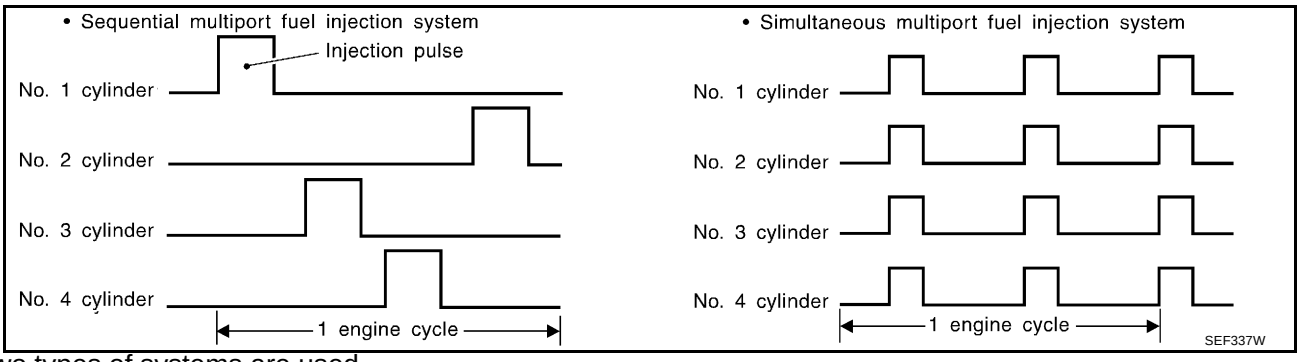

Two types of systems are used.

Sequential Multiport Fuel Injection System

Fuel is injected into each cylinder during each engine cycle according to the firing order. This system is used when the engine is running.

Simultaneous Multiport Fuel Injection System

Fuel is injected simultaneously into all four cylinders twice each engine cycle. In other words, pulse signals of the same width are simultaneously transmitted from the ECM.
The four fuel injectors will then receive the signals two times for each engine cycle.
This system is used when the engine is being started and/or if the fail-safe system (CPU) is operating.

FUEL SHUT-OFF

Fuel to each cylinder is cut off during deceleration, operation of the engine at excessively high speeds or operation of the vehicle at excessively high speeds.

Electronic Ignition (EI) System

BBS00490

INPUT/OUTPUT SIGNAL CHART

Sensor	Input Signal to ECM	ECM function	Actuator
Crankshaft position sensor (POS)	Engine speed*2 Piston position	Ignition timing control	Power transistor
Camshaft position sensor (PHASE)			
Mass air flow sensor	Amount of intake air		
Engine coolant temperature sensor	Engine coolant temperature		
Throttle position sensor	Throttle position		
Accelerator pedal position sensor	Accelerator pedal position		
Battery	Battery voltage*2		
Knock sensor	Engine knocking		
Park/neutral position (PNP) switch	Gear position		
Wheel sensor	Vehicle speed*1		

*1: This signal is sent to the ECM through CAN communication line.
*2: ECM determines the start signal status by the signals of engine speed and battery voltage.

SYSTEM DESCRIPTION

Firing order: 1 - 3 - 4 - 2
The ignition timing is controlled by the ECM to maintain the best air-fuel ratio for every running condition of the engine. The ignition timing data is stored in the ECM.
The ECM receives information such as the injection pulse width and camshaft position sensor (PHASE) signal. Computing this information, ignition signals are transmitted to the power transistor.
During the following conditions, the ignition timing is revised by the ECM according to the other data stored in the ECM.

- At starting
- During warm-up
- At idle
- At low battery voltage

- During acceleration

The knock sensor retard system is designed only for emergencies. The basic ignition timing is programmed within the anti-knocking zone, if recommended fuel is used under dry conditions. The retard system does not operate under normal driving conditions. If engine knocking occurs, the knock sensor monitors the condition. The signal is transmitted to the ECM. The ECM retards the ignition timing to eliminate the knocking condition.

Fuel Cut Control (at No Load and High Engine Speed)

BBS00491

INPUT/OUTPUT SIGNAL CHART

Sensor	Input Signal to ECM	ECM function	Actuator
Park/neutral position (PNP) switch	Neutral position	Fuel cut control	Fuel injector
Accelerator pedal position sensor	Accelerator pedal position		
Engine coolant temperature sensor	Engine coolant temperature		
Crankshaft position sensor (POS) Camshaft position sensor (PHASE)	Engine speed		
Wheel sensor	Vehicle speed*		

*: This signal is sent to the ECM through CAN communication line.

SYSTEM DESCRIPTION

If the engine speed is above 2,500 rpm under no load (for example, the shift lever position is neutral and engine speed is over 2,500 rpm) fuel will be cut off after some time. The exact time when the fuel is cut off varies based on engine speed.
Fuel cut will be operated until the engine speed reaches 2,000 rpm, then fuel cut will be cancelled.

NOTE:
This function is different from deceleration control listed under EC-817, "Multiport Fuel Injection (MFI) System"
.

AIR CONDITIONING CUT CONTROL

PFP:23710

Input/Output Signal Chart

BBS00492

Sensor	Input Signal to ECM	ECM function	Actuator
Air conditioner switch	Air conditioner ON signal*1	Air conditioner cut control	Air conditioner relay
Accelerator pedal position sensor	Accelerator pedal position		
Crankshaft position sensor (POS) Camshaft position sensor (PHASE)	Engine speed*2		
Engine coolant temperature sensor	Engine coolant temperature		
Battery	Battery voltage*2		
Refrigerant pressure sensor	Refrigerant pressure		
EPS control unit	Power steering operation*1		
Wheel sensor	Vehicle speed*1		

*1: This signal is sent to the ECM through CAN communication line.
*2: ECM determines the start signal status by the signals of engine speed and battery voltage.

System Description

BBS00493

This system improves engine operation when the air conditioner is used.
Under the following conditions, the air conditioner is turned OFF.

- When the accelerator pedal is fully depressed.
- When cranking the engine.
- At high engine speeds.
- When the engine coolant temperature becomes excessively high.
- When operating power steering during low engine speed or low vehicle speed.
- When engine speed is excessively low.
- When refrigerant pressure is excessively low or high.

CAN COMMUNICATION

PFP:23710

System Description

BBS00494

CAN (Controller Area Network) is a serial communication line for real time application. It is an on-vehicle multiplex communication line with high data communication speed and excellent error detection ability. Many electronic control units are equipped onto a vehicle, and each control unit shares information and links with other control units during operation (not independent). In CAN communication, control units are connected with 2 communication lines (CAN H line, CAN L line) allowing a high rate of information transmission with less wiring. Each control unit transmits/receives data but selectively reads required data only.
Refer to LAN-21, "CAN COMMUNICATION" , about CAN communication for detail.

EVAPORATIVE EMISSION SYSTEM

PFP:14950

Description

BBS00495

SYSTEM DESCRIPTION

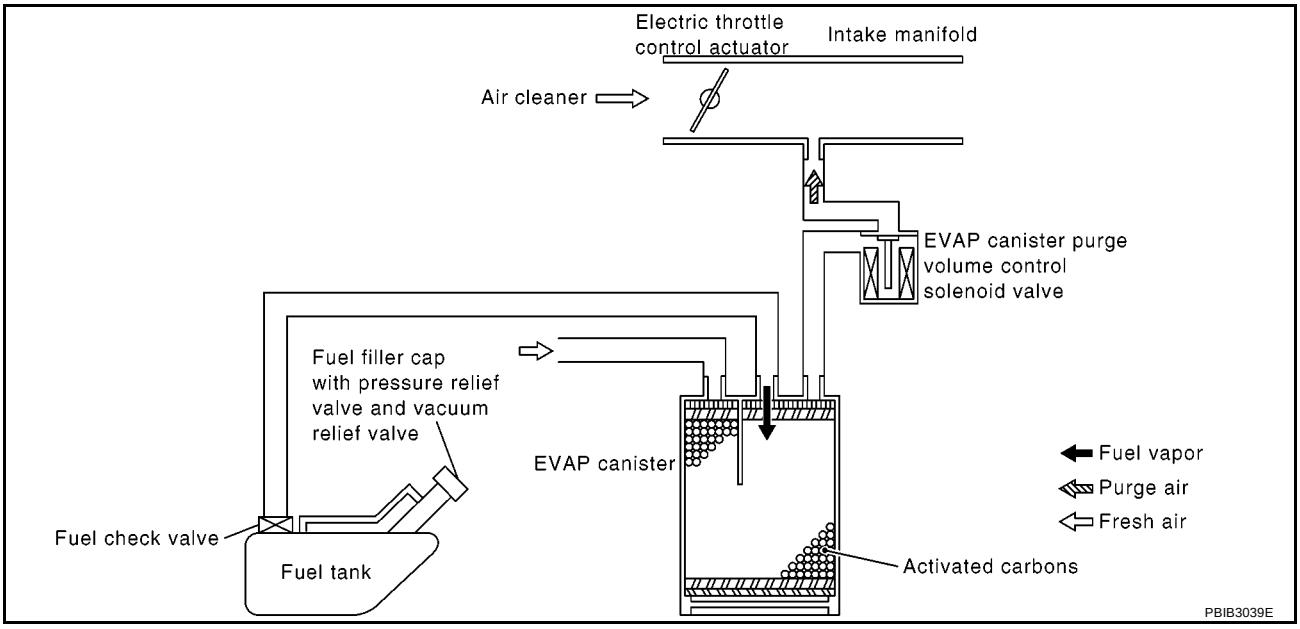

The evaporative emission system is used to reduce hydrocarbons emitted into the atmosphere from the fuel system. This reduction of hydrocarbons is accomplished by activated charcoals in the EVAP canister.
The fuel vapor in the sealed fuel tank is led into the EVAP canister which contains activated carbon and the vapor is stored there when the engine is not operating or when refueling to the fuel tank.
The vapor in the EVAP canister is purged by the air through the purge line to the intake manifold when the engine is operating. EVAP canister purge volume control solenoid valve is controlled by ECM. When the engine operates, the flow rate of vapor controlled by EVAP canister purge volume control solenoid valve is proportionally regulated as the air flow increases.
EVAP canister purge volume control solenoid valve also shuts off the vapor purge line during decelerating.

EVAPORATIVE EMISSION LINE DRAWING

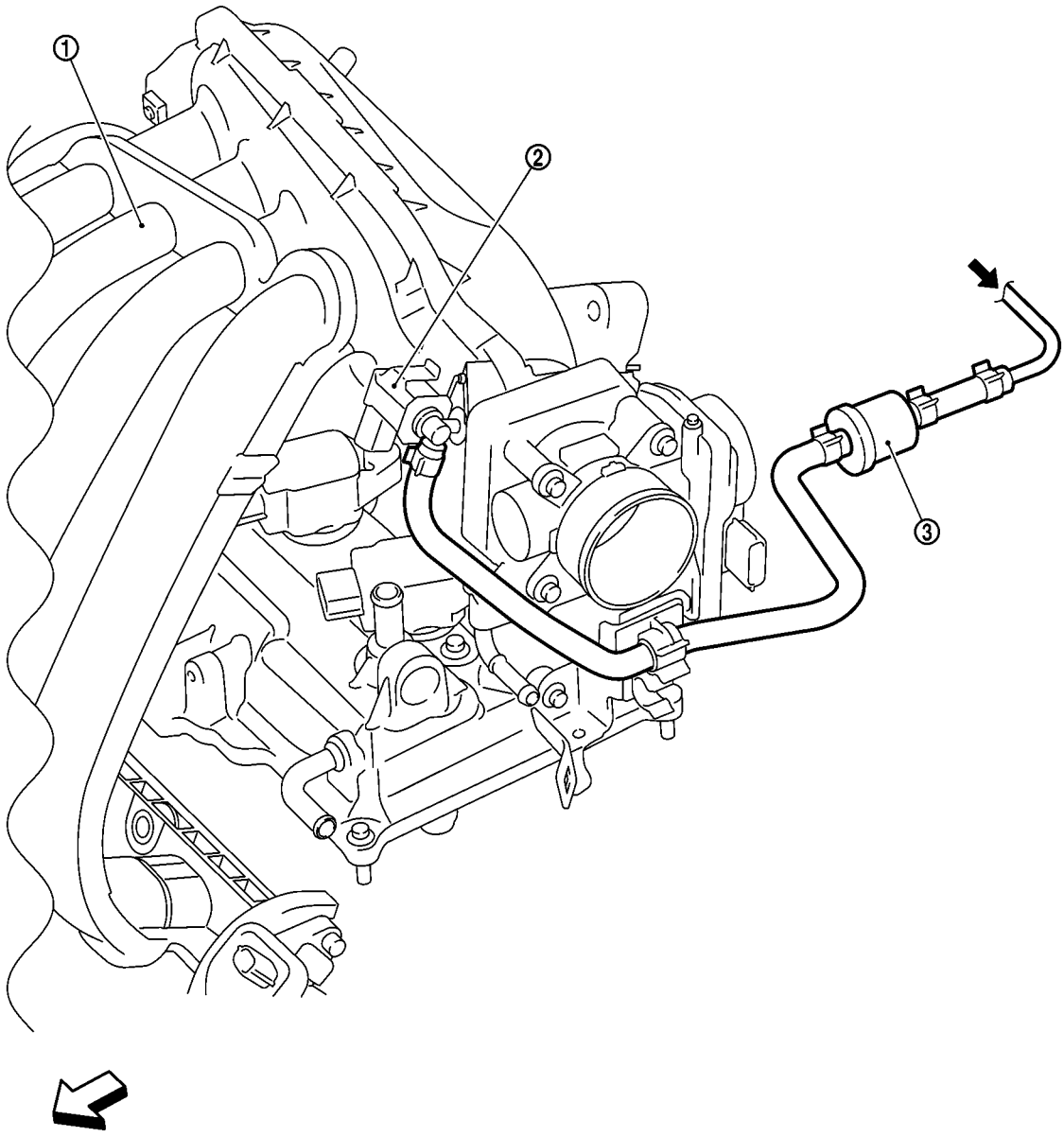

PBIB2946E

⇦ : Vehicle front

⬅ : From next page

1. Intake manifold
2. EVAP canister purge volume control solenoid valve
3. EVAP purge resonator

NOTE:
Do not use soapy water or any type of solvent while installing vacuum hose or purge hoses.

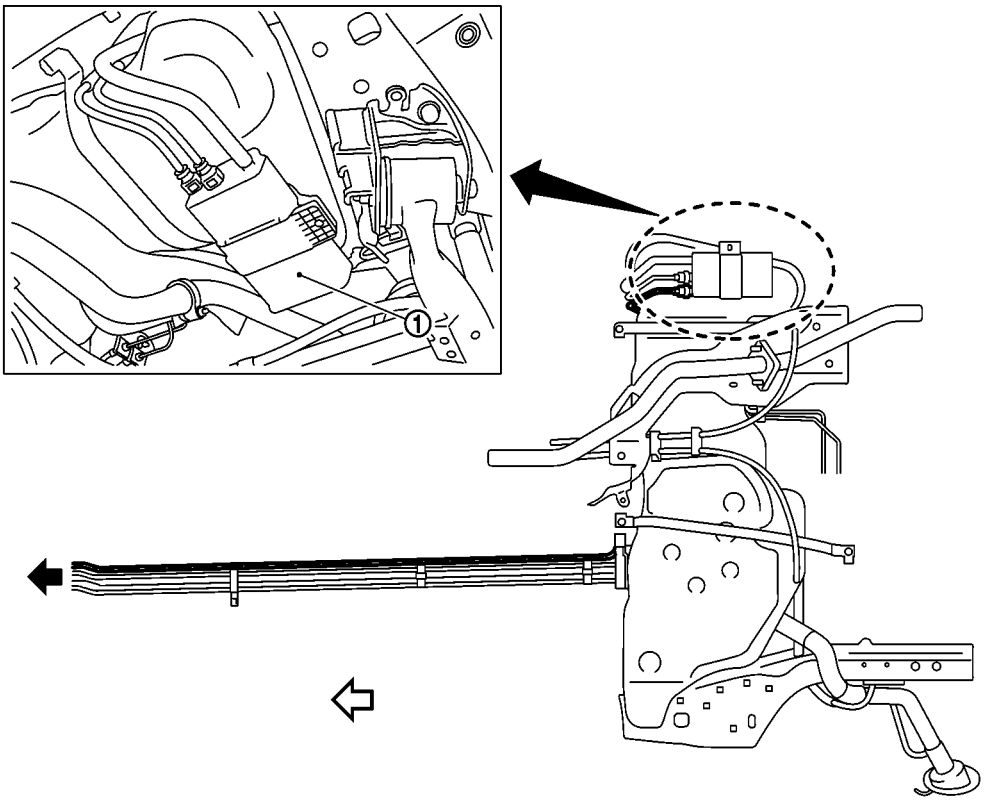

MBIB1450E

⇦ : Vehicle front

⬅ : To previous page

1. EVAP canister

Component Inspection

BBS00496

EVAP CANISTER

Check EVAP canister as follows:

1. Block port (B).
2. Blow air into port (A) and check that it flows freely out of port (C).
3. Release blocked port (B).
4. Apply vacuum pressure to port (B) and check that vacuum pressure exists at the ports (A) and (C).
5. Block port (A) and (B).
6. Apply pressure to port (C) and check that there is no leakage.

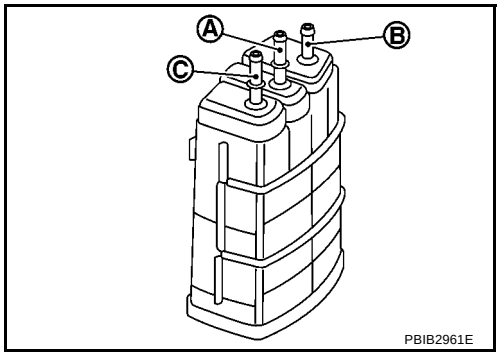

FUEL TANK VACUUM RELIEF VALVE (BUILT INTO FUEL FILLER CAP)

1. Wipe clean valve housing.

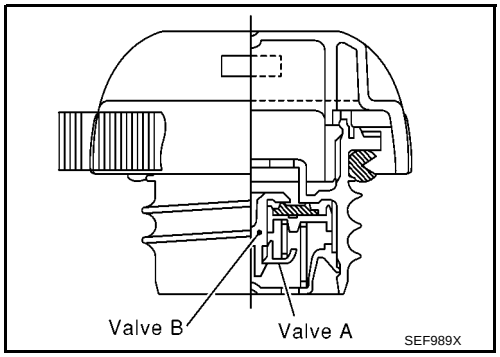

2. Check valve opening pressure and vacuum.

   Pressure: **15.3 - 20.0 kPa (0.153 - 0.200 bar, 0.156 - 0.204 kg/cm^2 , 2.22 - 2.90 psi)**

   Vacuum: **–6.0 to –3.3 kPa (–0.060 to –0.034 bar, –0.061 to –0.035 kg/cm^2 , –0.87 to –0.49 psi)**

3. If out of specification, replace fuel filler cap as an assembly.

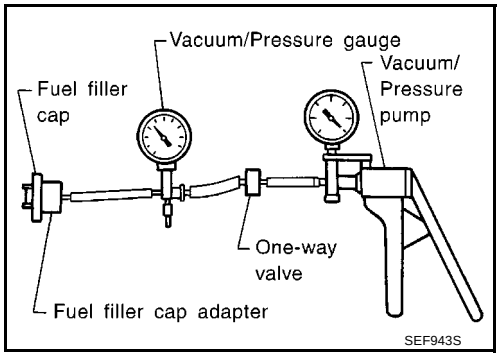

EVAP CANISTER PURGE VOLUME CONTROL SOLENOID VALVE

Refer to EC-1063, "DTC P0444 EVAP CANISTER PURGE VOLUME CONTROL SOLENOID VALVE" .

NATS (NISSAN ANTI-THEFT SYSTEM)

PFP:25386

Description

BBS00497

- **If the security indicator lights up with the ignition switch in the ON position or "NATS MALFUNCTION" is displayed on "SELF-DIAG RESULTS" screen, perform self-diagnostic results mode with CONSULT-II using NATS program card. Refer to BL-215, "NATS (Nissan Anti-Theft System)" .**
- **Confirm no self-diagnostic results of NATS is displayed before touching "ERASE" in "SELF-DIAG RESULTS" mode with CONSULT-II.**
- **When replacing ECM, initialization of NATS system and registration of all NATS ignition key IDs must be carried out with CONSULT-II using NATS program card.**
  Therefore, be sure to receive all keys from vehicle owner.
  Regarding the procedures of NATS initialization and all NATS ignition key ID registration, refer to CONSULT-II operation manual, NATS.

SELF DIAG RESULTS	
DTC RESULTS	TIME
NATS MALFUNCTION [P1610]	0

SEF515Y

POSITIVE CRANKCASE VENTILATION

PFP:11810

Description

BBS00498

SYSTEM DESCRIPTION

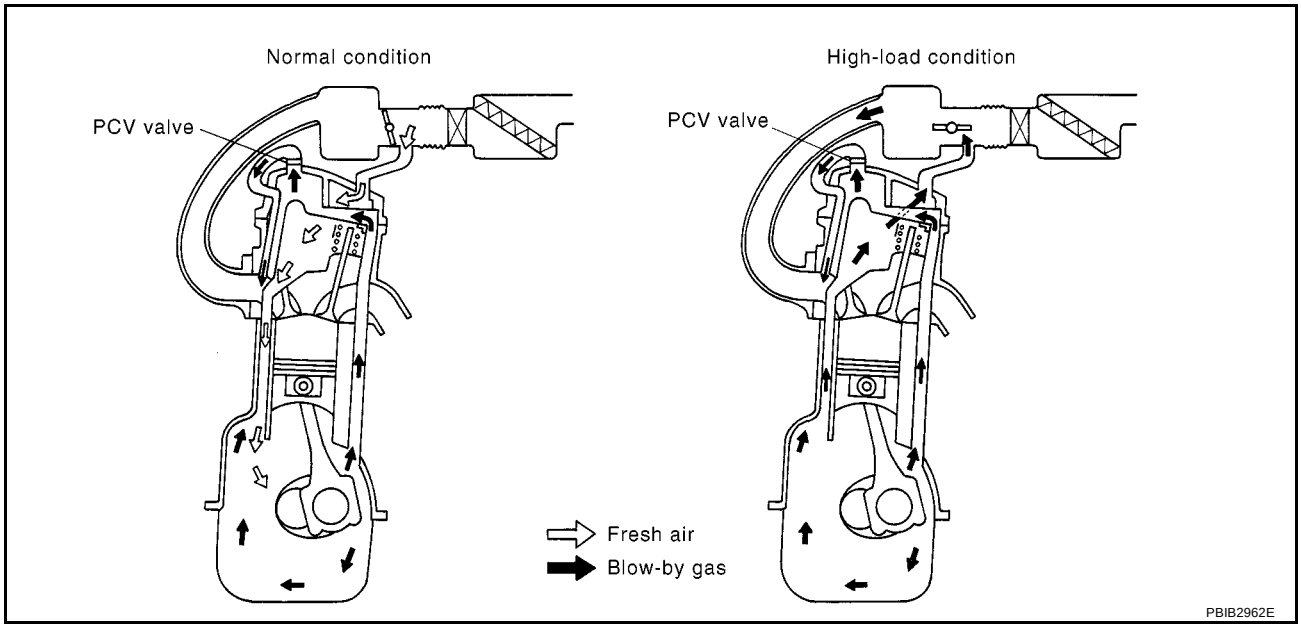

This system returns blow-by gas to the intake manifold.
The positive crankcase ventilation (PCV) valve is provided to conduct crankcase blow-by gas to the intake manifold.
During partial throttle operation of the engine, the intake manifold sucks the blow-by gas through the PCV valve.
Normally, the capacity of the valve is sufficient to handle any blow-by and a small amount of ventilating air.
The ventilating air is then drawn from the air inlet tubes into the crankcase. In this process the air passes through the hose connecting air inlet tubes to rocker cover.
Under full-throttle condition, the manifold vacuum is insufficient to draw the blow-by flow through the valve. The flow goes through the hose connection in the reverse direction.
On vehicles with an excessively high blow-by, the valve does not meet the requirement. This is because some of the flow will go through the hose connection to the air inlet tubes under all conditions.

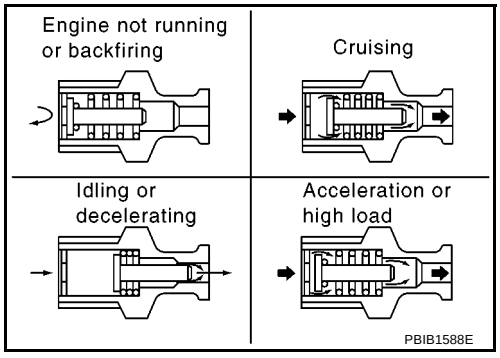

Component Inspection

BBS00499

PCV (POSITIVE CRANKCASE VENTILATION) VALVE

With engine running at idle, remove PCV valve from rocker cover. A properly working valve makes a hissing noise as air passes through it. A strong vacuum should be felt immediately when a finger is placed over valve inlet.

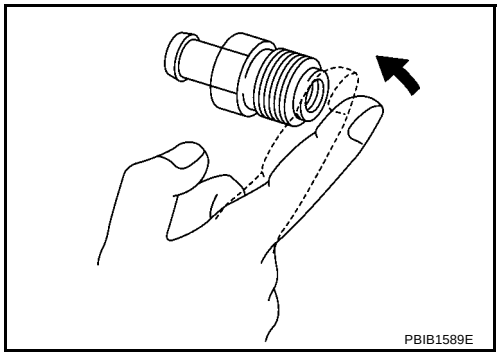

PCV VALVE VENTILATION HOSE

1. Check hoses and hose connections for leaks.
2. Disconnect all hoses and clean with compressed air. If any hose cannot be freed of obstructions, replace.

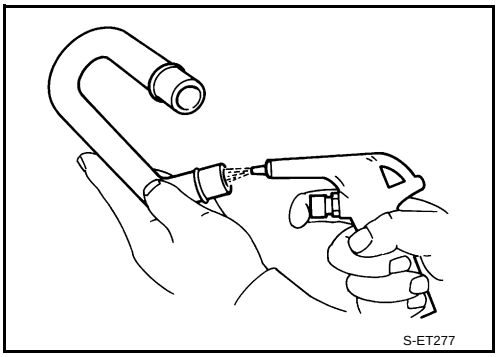

ON BOARD DIAGNOSTIC (OBD) SYSTEM

PFP:00028

Introduction

BBS0049A

The ECM has an on board diagnostic system, which detects malfunctions related to engine sensors or actuators. The ECM also records various emission-related diagnostic information including:

Emission-related diagnostic information	Diagnostic service
Diagnostic Trouble Code (DTC)	Service $03 of ISO 15031-5
Freeze Frame data	Service $02 of ISO 15031-5
System Readiness Test (SRT) code	Service $01 of ISO 15031-5
1st Trip Diagnostic Trouble Code (1st Trip DTC)	Service $07 of ISO 15031-5
1st Trip Freeze Frame data	
Test values and Test limits	Service $06 of ISO 15031-5

The above information can be checked using procedures listed in the table below.

×: Applicable —: Not applicable

	DTC	1st trip DTC	Freeze Frame data	1st trip Freeze Frame data	SRT code	Test value
CONSULT-II	×	×	×	×	×	—
GST	×	×	×	—	×	×
ECM	×	×*	—	—	—	—

*: When DTC and 1st trip DTC simultaneously appear on the display, they cannot be clearly distinguished from each other.

The malfunction indicator (MI) on the instrument panel lights up when the same malfunction is detected in two consecutive trips (Two trip detection logic), or when the ECM enters fail-safe mode. (Refer to EC-870, "Fail-Safe Chart" .)

Two Trip Detection Logic

BBS0049B

When a malfunction is detected for the first time, 1st trip DTC and 1st trip Freeze Frame data are stored in the ECM memory. The MI will not light up at this stage. <1st trip>
If the same malfunction is detected again during the next drive, the DTC and Freeze Frame data are stored in the ECM memory, and the MI lights up. The MI lights up at the same time when the DTC is stored. <2nd trip>
The “trip” in the “Two Trip Detection Logic” means a driving mode in which self-diagnosis is performed during vehicle operation. Specific on board diagnostic items will cause the ECM to light up or blink the MI, and store DTC and Freeze Frame data, even in the 1st trip, as shown below.

×: Applicable —: Not applicable

Items	MI				DTC		1st trip DTC	
	1st trip		2nd trip		1st trip displaying	2nd trip displaying	1st trip displaying	2nd trip displaying
	Blinking	Lighting up	Blinking	Lighting up				
Misfire (Possible three way catalyst damage) — DTC: P0300 - P0304 is being detected	×	—	—	—	—	—	×	—
Misfire (Possible three way catalyst damage) — DTC: P0300 - P0304 is being detected	—	—	×	—	—	×	—	—
One trip detection diagnoses (Refer to EC-831, "EMISSION-RELATED DIAGNOSTIC INFORMATION ITEMS" .)	—	×	—	—	×	—	—	—
Except above	—	—	—	×	—	×	×	—

When there is an open circuit on MI circuit, the ECM cannot warn the driver by lighting up MI when there is malfunction on engine control system.
Therefore, when electrical controlled throttle and part of ECM related diagnoses are continuously detected as NG for 5 trips, ECM warns the driver that engine control system malfunctions and MI circuit is open by means of operating fail-safe function.

The fail-safe function also operates when above diagnoses except MI circuit are detected and demands the driver to repair the malfunction.

Engine operating condition in fail-safe mode	Engine speed will not rise more than 2,500 rpm due to the fuel cut

Emission-related Diagnostic Information

BBS0049C

EMISSION-RELATED DIAGNOSTIC INFORMATION ITEMS

×:Applicable —: Not applicable

Items (CONSULT-II screen terms)	DTC*1		SRT code	Test value/ Test limit (GST only)	Trip	MI	Reference page
	CONSULT-II GST*2	ECM*3					
CAN COMM CIRCUIT	U1000	1000*4	—	—	1	×	EC-925
CAN COMM CIRCUIT	U1001	1001*4	—	—	2	—	EC-925
CONTROL UNIT(CAN)	U1010	1010	—	—	1 (A/T) 2 (M/T)	× (A/T) — (M/T)	EC-928
NO DTC IS DETECTED. FURTHER TESTING MAY BE REQUIRED.	**P0000**	**0000**	—	—	—	**Flashing***5	EC-844
INT/V TIM CONT-B1	P0011	0011	—	—	2	—	EC-930
MAF SEN/CIRCUIT	P0102	0102	—	—	1	×	EC-935
MAF SEN/CIRCUIT	P0103	0103	—	—	1	×	EC-935
IAT SEN/CIRCUIT	P0112	0112	—	—	2	×	EC-942
IAT SEN/CIRCUIT	P0113	0113	—	—	2	×	EC-942
ECT SEN/CIRC	P0117	0117	—	—	1	×	EC-947
ECT SEN/CIRC	P0118	0118	—	—	1	×	EC-947
TP SEN 2/CIRC	P0122	0122	—	—	1	×	EC-953
TP SEN 2/CIRC	P0123	0123	—	—	1	×	EC-953
HO2S1 (B1)	P0132	0132	—	×	2	×	EC-959
HO2S1 (B1)	P0133	0133	×	×	2	×	EC-967
HO2S1 (B1)	P0134	0134	—	×	2	×	EC-977
HO2S1 HTR (B1)	P0135	0135	×	×	2	×	EC-985
HO2S2 (B1)	P0138	0138	—	×	2	×	EC-991
HO2S2 (B1)	P0139	0139	×	×	2	×	EC-998
HO2S2 HTR (B1)	P0141	0141	×	×	2	×	EC-1006
FUEL SYS-LEAN-B1	P0171	0171	—	—	2	×	EC-1012
FUEL SYS-RICH-B1	P0172	0172	—	—	2	×	EC-1019
TP SEN 1/CIRC	P0222	0222	—	—	1	×	EC-1026
TP SEN 1/CIRC	P0223	0223	—	—	1	×	EC-1026
MULTI CYL MISFIRE	P0300	0300	—	—	2	×	EC-1032
CYL 1 MISFIRE	P0301	0301	—	—	2	×	EC-1032
CYL 2 MISFIRE	P0302	0302	—	—	2	×	EC-1032
CYL 3 MISFIRE	P0303	0303	—	—	2	×	EC-1032
CYL 4 MISFIRE	P0304	0304	—	—	2	×	EC-1032
KNOCK SEN/CIRC-B1	P0327	0327	—	—	2	—	EC-1038
KNOCK SEN/CIRC-B1	P0328	0328	—	—	2	—	EC-1038
CKP SEN/CIRCUIT	P0335	0335	—	—	2	×	EC-1042
CMP SEN/CIRC-B1	P0340	0340	—	—	2	×	EC-1049
TW CATALYST SYS-B1	P0420	0420	×	×	2	×	EC-1056
PURG VOLUME CONT/V	P0444	0444	—	—	2	×	EC-1063

Items (CONSULT-II screen terms)	DTC*1		SRT code	Test value/ Test limit (GST only)	Trip	MI	Reference page
	CONSULT-II GST*2	ECM*3					
VEH SPEED SEN/CIRC*6	P0500	0500	—	—	2	×	EC-1070
ECM	P0605	0605	—	—	1 or 2	× or —	EC-1072
PNP SW/CIRC	P0705	0705	—	—	2	×	AT-105
ATF TEMP SEN/CIRC	P0710	0710	—	—	2	×	AT-110
VEH SPD SEN/CIR AT*6	P0720	0720	—	—	2	×	AT-115
ENGINE SPEED SIG	P0725	0725	—	—	2	×	AT-121
A/T 1ST GR FNCTN	P0731	0731	—	—	2	×	AT-125
A/T 2ND GR FNCTN	P0732	0732	—	—	2	×	AT-129
A/T 3RD GR FNCTN	P0733	0733	—	—	2	×	AT-132
A/T 4TH GR FNCTN	P0734	0734	—	—	2	×	AT-136
TCC SOLENOID/CIRC	P0740	0740	—	—	2	×	AT-142
A/T TCC S/V FNCTN	P0744	0744	—	—	2	×	AT-147
L/PRESS SOL/CIRC	P0745	0745	—	—	2	×	AT-153
SHIFT SOL A/CIRC	P0750	0750	—	—	1	×	AT-159
SHIFT SOL B/CIRC	P0755	0755	—	—	1	×	AT-164
ECM BACK UP/CIRCUIT*7	P1065	1065	—	—	2	×	EC-1075
INT/V TIM V/CIR-B1	P1111	1111	—	—	2	×	EC-1077
ETC ACTR	P1121	1121	—	—	1	×	EC-1082
ETC FUNCTION/CIRC	P1122	1122	—	—	1	×	EC-1084
ETC MOT PWR	P1124	1124	—	—	1	×	EC-1090
ETC MOT PWR	P1126	1126	—	—	1	×	EC-1090
ETC MOT	P1128	1128	—	—	1	×	EC-1096
HO2S1 (B1)	P1143	1143	×	×	2	×	EC-1101
HO2S1 (B1)	P1144	1144	×	×	2	×	EC-1107
HO2S2 (B1)	P1146	1146	×	×	2	×	EC-1113
HO2S2 (B1)	P1147	1147	×	×	2	×	EC-1121
TCS/CIRC	P1212	1212	—	—	2	—	EC-1129
ENG OVER TEMP	P1217	1217	—	—	1	×	EC-1130
CTP LEARNING	P1225	1225	—	—	2	—	EC-1146
CTP LEARNING	P1226	1226	—	—	2	—	EC-1148
SENSOR POWER/CIRC	P1229	1229	—	—	1	×	EC-1150
NATS MALFUNCTION	P1610 - P1615	1610 - 1615	—	—	2	—	BL-215
TP SEN/CIRC A/T	P1705	1705	—	—	1	×	AT-169
P-N POS SW/CIRCUIT	P1706	1706	—	—	2	×	EC-1158
O/R CLTCH SOL/CIRC	P1760	1760	—	—	2	×	AT-171
BRAKE SW/CIRCUIT	P1805	1805	—	—	2	—	EC-1167
APP SEN 1/CIRC	P2122	2122	—	—	1	×	EC-1172
APP SEN 1/CIRC	P2123	2123	—	—	1	×	EC-1172
APP SEN 2/CIRC	P2127	2127	—	—	1	×	EC-1181
APP SEN 2/CIRC	P2128	2128	—	—	1	×	EC-1181
TP SENSOR	P2135	2135	—	—	1	×	EC-1191
APP SENSOR	P2138	2138	—	—	1	×	EC-1197

*1: 1st trip DTC No. is the same as DTC No.
*2: This number is prescribed by ISO 15031-5.
*3: In Diagnostic Test Mode II (Self-diagnostic results), this number is controlled by NISSAN.
*4: The troubleshooting for this DTC needs CONSULT-II.
*5: When engine is running, MI may flash. For details, refer to EC-844, "MI Flashing Without DTC" .
*6: When the fail-safe operations for both self-diagnoses occur at the same time, the MI illuminates.
*7:This self-diagnosis is not for ECM power supply circuit, even though “ECM BACK UP/CIRCUIT” is displayed on CONSULT-II screen.

DTC AND 1ST TRIP DTC

The 1st trip DTC (whose number is the same as the DTC number) is displayed for the latest self-diagnostic result obtained. If the ECM memory was cleared previously, and the 1st trip DTC did not reoccur, the 1st trip DTC will not be displayed.
If a malfunction is detected during the 1st trip, the 1st trip DTC is stored in the ECM memory. The MI will not light up (two trip detection logic). If the same malfunction is not detected in the 2nd trip (meeting the required driving pattern), the 1st trip DTC is cleared from the ECM memory. If the same malfunction is detected in the 2nd trip, both the 1st trip DTC and DTC are stored in the ECM memory and the MI lights up. In other words, the DTC is stored in the ECM memory and the MI lights up when the same malfunction occurs in two consecutive trips. If a 1st trip DTC is stored and a non-diagnostic operation is performed between the 1st and 2nd trips, only the 1st trip DTC will continue to be stored. For malfunctions that blink or light up the MI during the 1st trip, the DTC and 1st trip DTC are stored in the ECM memory.
Procedures for clearing the DTC and the 1st trip DTC from the ECM memory are described in EC-841, "HOW TO ERASE EMISSION-RELATED DIAGNOSTIC INFORMATION" .
For malfunctions in which 1st trip DTCs are displayed, refer to EC-831, "EMISSION-RELATED DIAGNOSTIC INFORMATION ITEMS" . These items are required by legal regulations to continuously monitor the system/component. In addition, the items monitored non-continuously are also displayed on CONSULT-II.
1st trip DTC is specified in Service $07 of ISO 15031-5. 1st trip DTC detection occurs without lighting up the MI and therefore does not warn the driver of a malfunction. However, 1st trip DTC detection will not prevent the vehicle from being tested, for example during Inspection/Maintenance (I/M) tests.
When a 1st trip DTC is detected, check, print out or write down and erase (1st trip) DTC and Freeze Frame data as specified in Work Flow procedure Step 2, refer to EC-864, "WORK FLOW" . Then perform DTC Confirmation Procedure or Overall Function Check to try to duplicate the malfunction. If the malfunction is duplicated, the item requires repair.

How to Read DTC and 1st Trip DTC

DTC and 1st trip DTC can be read by the following methods.

With CONSULT-II

With GST

CONSULT-II or GST (Generic Scan Tool) Examples: P0340, P0740, P1217, etc.
These DTCs are prescribed by ISO 15031-5.
(CONSULT-II also displays the malfunctioning component or system.)

No Tools

The number of blinks of the MI in the Diagnostic Test Mode II (Self-Diagnostic Results) indicates the DTC. Example: 0340, 0740, 1217, etc.
These DTCs are controlled by NISSAN.

- **1st trip DTC No. is the same as DTC No.**
- **Output of a DTC indicates a malfunction. However, GST or the Diagnostic Test Mode II do not indicate whether the malfunction is still occurring or has occurred in the past and has returned to normal. CONSULT-II can identify malfunction status as shown below. Therefore, using CONSULT-II (if available) is recommended.**

A sample of CONSULT-II display for DTC and 1st trip DTC is shown below. DTC or 1st trip DTC of a malfunction is displayed in SELF-DIAGNOSTIC RESULTS mode of CONSULT-II. Time data indicates how many times the vehicle was driven after the last detection of a DTC.
If the DTC is being detected currently, the time data will be [0].

If a 1st trip DTC is stored in the ECM, the time data will be [1t].

DTC display

SELF DIAG RESULTS	
DTC RESULTS	TIME
CKP SEN/CIRCUIT [P0335]	0

1st trip DTC display

SELF DIAG RESULTS	
DTC RESULTS	TIME
CKP SEN/CIRCUIT [P0335]	1t

PBIB0911E

FREEZE FRAME DATA AND 1ST TRIP FREEZE FRAME DATA

The ECM records the driving conditions such as fuel system status, calculated load value, engine coolant temperature, short term fuel trim, long term fuel trim, engine speed, vehicle speed, base fuel schedule and intake air temperature at the moment a malfunction is detected.
Data which are stored in the ECM memory, along with the 1st trip DTC, are called 1st trip freeze frame data. The data, stored together with the DTC data, are called freeze frame data and displayed on CONSULT-II or GST. The 1st trip freeze frame data can only be displayed on the CONSULT-II screen, not on the GST. For details, see EC-893, "Freeze Frame Data and 1st Trip Freeze Frame Data" .
Only one set of freeze frame data (either 1st trip freeze frame data or freeze frame data) can be stored in the ECM. 1st trip freeze frame data is stored in the ECM memory along with the 1st trip DTC. There is no priority for 1st trip freeze frame data and it is updated each time a different 1st trip DTC is detected. However, once freeze frame data (2nd trip detection/MI on) is stored in the ECM memory, 1st trip freeze frame data is no longer stored. Remember, only one set of freeze frame data can be stored in the ECM. The ECM has the following priorities to update the data.

Priority	Items	
1	Freeze frame data	Misfire — DTC: P0300 - P0304 Fuel Injection System Function — DTC: P0171, P0172
2		Except the above items (Includes A/T related items)
3	1st trip freeze frame data	

For example, the EGR malfunction (Priority: 2) was detected and the freeze frame data was stored in the 2nd trip. After that when the misfire (Priority: 1) is detected in another trip, the freeze frame data will be updated from the EGR malfunction to the misfire. The 1st trip freeze frame data is updated each time a different malfunction is detected. There is no priority for 1st trip freeze frame data. However, once freeze frame data is stored in the ECM memory, 1st trip freeze data is no longer stored (because only one freeze frame data or 1st trip freeze frame data can be stored in the ECM). If freeze frame data is stored in the ECM memory and freeze frame data with the same priority occurs later, the first (original) freeze frame data remains unchanged in the ECM memory.
Both 1st trip freeze frame data and freeze frame data (along with the DTCs) are cleared when the ECM memory is erased. Procedures for clearing the ECM memory are described in EC-841, "HOW TO ERASE EMISSION-RELATED DIAGNOSTIC INFORMATION" .

SYSTEM READINESS TEST (SRT) CODE

System Readiness Test (SRT) code is specified in Service $01 of ISO 15031-5.
As part of an enhanced emissions test for Inspection & Maintenance (I/M), certain states require the status of SRT be used to indicate whether the ECM has completed self-diagnosis of major emission systems and components. Completion must be verified in order for the emissions inspection to proceed.
If a vehicle is rejected for a State emissions inspection due to one or more SRT items indicating “INCMP”, use the information in this Service Manual to set the SRT to “CMPLT”.
In most cases the ECM will automatically complete its self-diagnosis cycle during normal usage, and the SRT status will indicate “CMPLT” for each application system. Once set as “CMPLT”, the SRT status remains “CMPLT” until the self-diagnosis memory is erased.
Occasionally, certain portions of the self-diagnostic test may not be completed as a result of the customer's normal driving pattern; the SRT will indicate “INCMP” for these items.

NOTE:
The SRT will also indicate “INCMP” if the self-diagnosis memory is erased for any reason or if the ECM memory power supply is interrupted for several hours.

If, during the state emissions inspection, the SRT indicates “CMPLT” for all test items, the inspector will continue with the emissions test. However, if the SRT indicates “INCMP” for one or more of the SRT items the vehicle is returned to the customer untested.

NOTE:
If MI is ON during the state emissions inspection, the vehicle is also returned to the customer untested even though the SRT indicates “CMPLT” for all test items. Therefore, it is important to check SRT (“CMPLT”) and DTC (No DTCs) before the inspection.

SRT Item

The table below shows required self-diagnostic items to set the SRT to “CMPLT”.

SRT item (CONSULT-II indication)	Performance Priority*	Required self-diagnostic items to set the SRT to “CMPLT”	Corresponding DTC No.
CATALYST	2	Three way catalyst function	P0420
HO2S	1	Heated oxygen sensor 1	P0133
		Heated oxygen sensor 1	P1143
		Heated oxygen sensor 1	P1144
		Heated oxygen sensor 2	P0139
		Heated oxygen sensor 2	P1146
		Heated oxygen sensor 2	P1147
HO2S HTR	1	Heated oxygen sensor 1 heater	P0135
		Heated oxygen sensor 2 heater	P0141

*: If completion of several SRTs is required, perform driving patterns (DTC confirmation procedure), one by one based on the priority for models with CONSULT-II.

SRT Set Timing

SRT is set as “CMPLT” after self-diagnosis has been performed one or more times. Completion of SRT is done regardless of whether the result is OK or NG. The set timing is different between OK and NG results and is shown in the table below.

Self-diagnosis result		Example				
		Diagnosis	Ignition cycle ← ON → OFF	← ON → OFF	← ON → OFF	← ON →
All OK	Case 1	P0400	OK (1)	— (1)	OK (2)	— (2)
		P0402	OK (1)	— (1)	— (1)	OK (2)
		P1402	OK (1)	OK (2)	— (2)	— (2)
		SRT of EGR	“CMPLT”	“CMPLT”	“CMPLT”	“CMPLT”
	Case 2	P0400	OK (1)	— (1)	— (1)	— (1)
		P0402	— (0)	— (0)	OK (1)	— (1)
		P1402	OK (1)	OK (2)	— (2)	— (2)
		SRT of EGR	“INCMP”	“INCMP”	“CMPLT”	“CMPLT”
NG exists	Case 3	P0400	OK	OK	—	—
		P0402	—	—	—	—
		P1402	NG	—	NG	NG (Consecutive NG)
		(1st trip) DTC	1st trip DTC	—	1st trip DTC	DTC (= MI ON)
		SRT of EGR	“INCMP”	“INCMP”	“INCMP”	“CMPLT”

OK: Self-diagnosis is carried out and the result is OK.
NG: Self-diagnosis is carried out and the result is NG.
—: Self-diagnosis is not carried out.

When all SRT related self-diagnoses showed OK results in a single cycle (Ignition OFF-ON-OFF), the SRT will indicate “CMPLT”. → Case 1 above

When all SRT related self-diagnoses showed OK results through several different cycles, the SRT will indicate “CMPLT” at the time the respective self-diagnoses have at least one OK result. → Case 2 above
If one or more SRT related self-diagnoses showed NG results in 2 consecutive cycles, the SRT will also indicate “CMPLT”. → Case 3 above
The table above shows that the minimum number of cycles for setting SRT as “INCMP” is one (1) for each self-diagnosis (Case 1 & 2) or two (2) for one of self-diagnoses (Case 3). However, in preparation for the state emissions inspection, it is unnecessary for each self-diagnosis to be executed twice (Case 3) for the following reasons:

- The SRT will indicate “CMPLT” at the time the respective self-diagnoses have one (1) OK result.
- The emissions inspection requires “CMPLT” of the SRT only with OK self-diagnosis results.
- When, during SRT driving pattern, 1st trip DTC (NG) is detected prior to “CMPLT” of SRT, the self-diagnosis memory must be erased from ECM after repair.
- If the 1st trip DTC is erased, all the SRT will indicate “INCMP”.

  NOTE:
  SRT can be set as “CMPLT” together with the DTC(s). Therefore, DTC check must always be carried out prior to the state emission inspection even though the SRT indicates “CMPLT”.

SRT Service Procedure

If a vehicle has failed the state emissions inspection due to one or more SRT items indicating “INCMP”, review the flowchart diagnostic sequence on the next page.

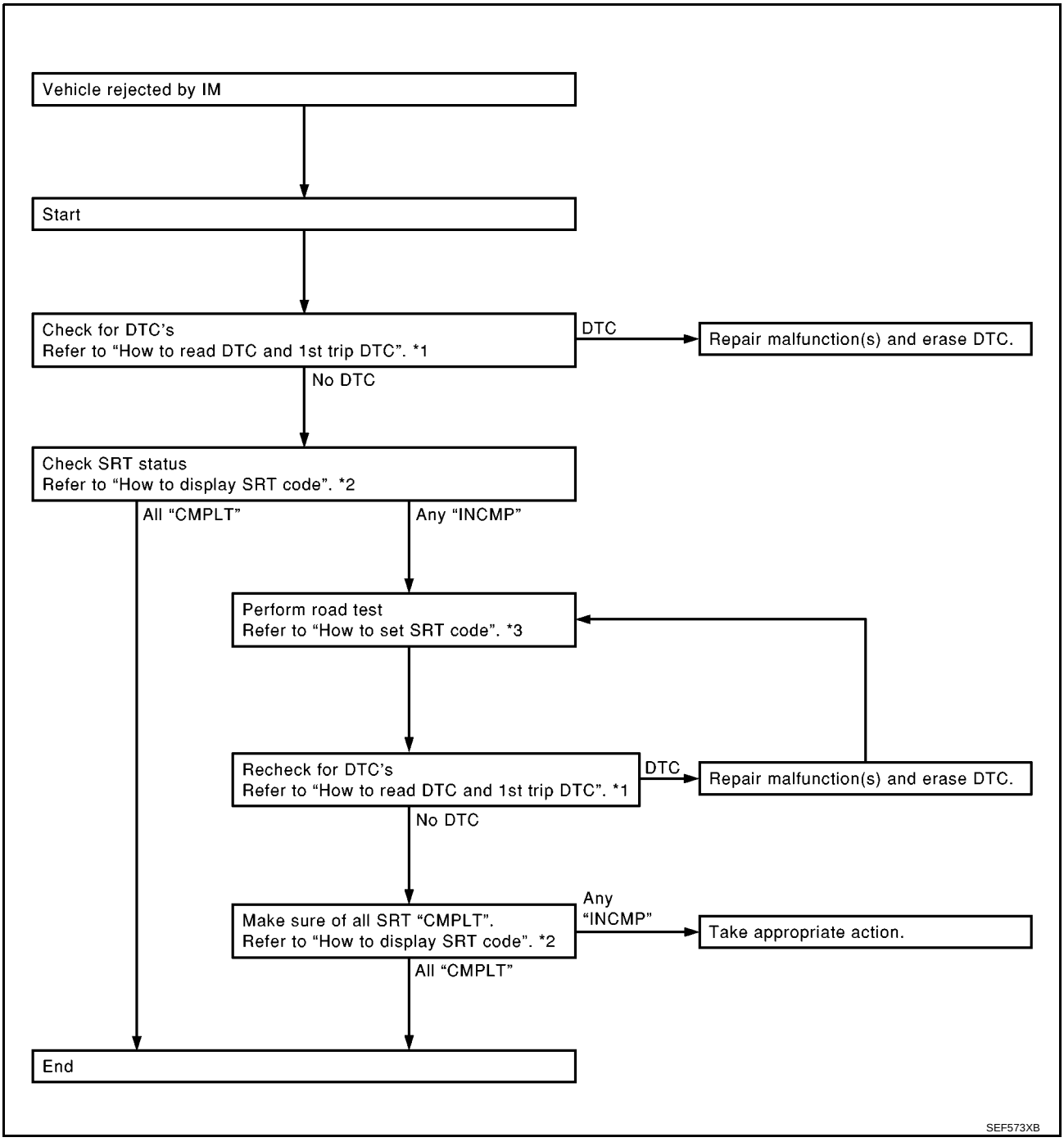

*1 EC-833, "How to Read DTC and 1st Trip DTC" *2 EC-837, "How to Display SRT Code" *3 EC-838, "How to Set SRT Code"

How to Display SRT Code

WITH CONSULT-II

Selecting "SRT STATUS" in "DTC & SRT CONFIRMATION" mode with CONSULT-II.

For items whose SRT codes are set, a "CMPLT" is displayed on the CONSULT-II screen; for items whose SRT codes are not set, "INCMP" is displayed.

A sample of CONSULT-II display for SRT code is shown in the figure.

"INCMP" means the self-diagnosis is incomplete and SRT is not set.

"CMPLT" means the self-diagnosis is complete and SRT is set.

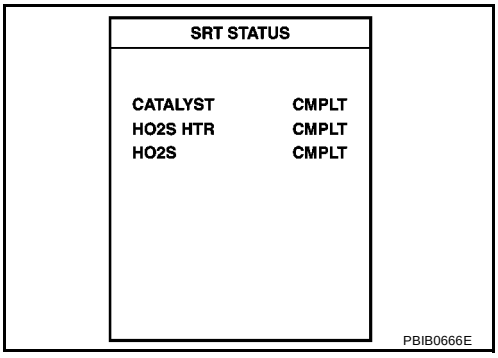

WITH GST
Selecting Service $01 with GST (Generic Scan Tool)

How to Set SRT Code

To set all SRT codes, self-diagnosis for the items indicated above must be performed one or more times. Each diagnosis may require a long period of actual driving under various conditions.

WITH CONSULT-II
Perform corresponding DTC Confirmation Procedure one by one based on Performance Priority in the table on EC-835, "SRT Item" .

WITHOUT CONSULT-II
The most efficient driving pattern in which SRT codes can be properly set is explained on the next page. The driving pattern should be performed one or more times to set all SRT codes.

Driving Pattern

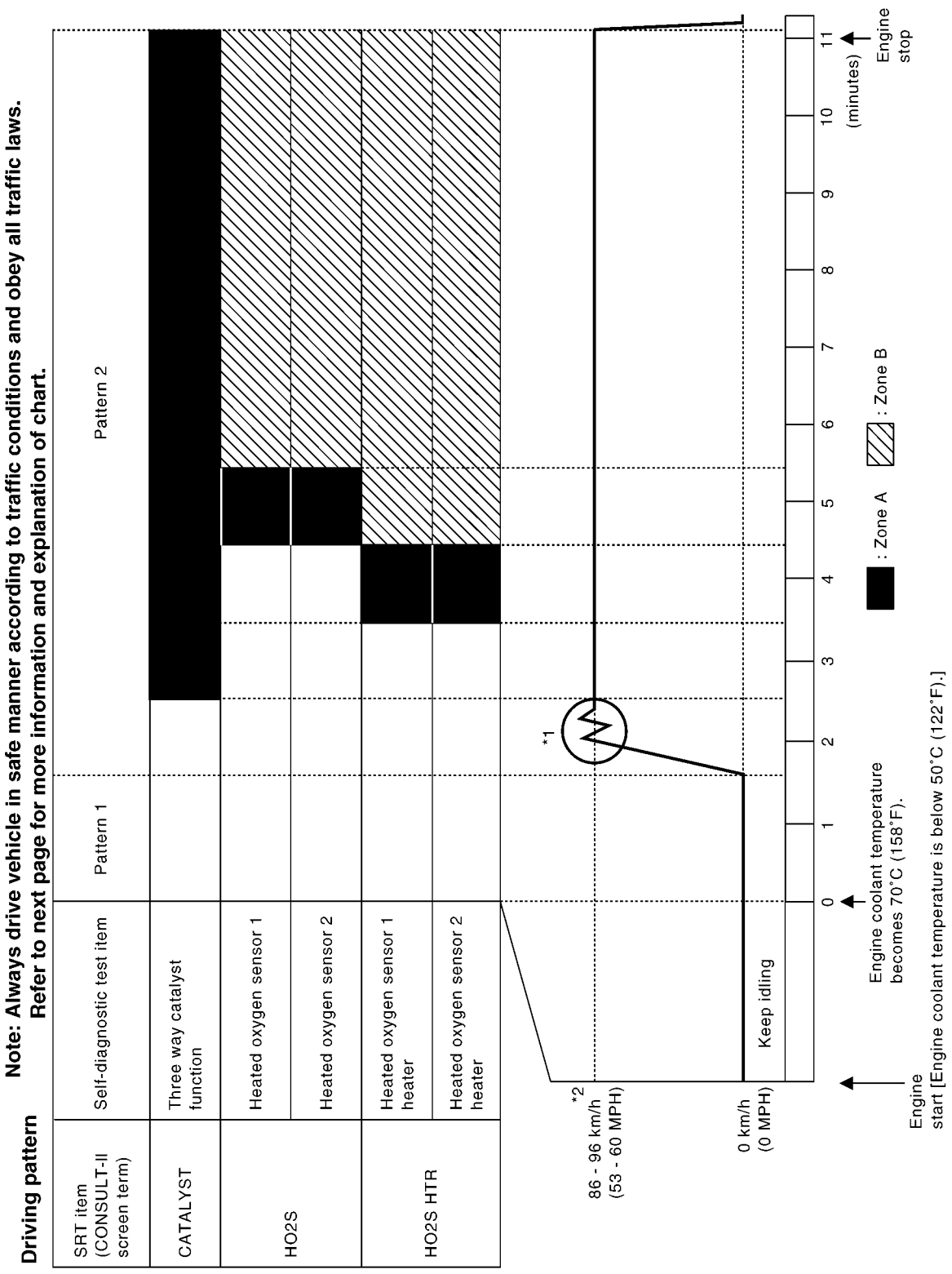

PBIB2451E

- The time required for each diagnosis varies with road surface conditions, weather, altitude, individual driving habits, etc.
  Zone A refers to the range where the time, required for the diagnosis under normal conditions*, is the shortest.
  Zone B refers to the range where the diagnosis can still be performed if the diagnosis is not completed within zone A.

*: Normal conditions refer to the following:

- Sea level
- Flat road
- Ambient air temperature: 20 - 30°C (68 - 86°F)
- Diagnosis is performed as quickly as possible under normal conditions.
  Under different conditions [For example: ambient air temperature other than 20 - 30°C (68 - 86°F)], diagnosis may also be performed.

Pattern 1:

- **The engine is started at the engine coolant temperature of –10 to 35°C (14 to 95°F) (where the voltage between the ECM terminal 38 and ground is 3.0 - 4.3V).**
- **The engine must be operated at idle speed until the engine coolant temperature is greater than 70°C (158°F) (where the voltage between the ECM terminal 38 and ground is lower than 1.4V).**

Pattern 2:

- When steady-state driving is performed again even after it is interrupted, each diagnosis can be conducted. In this case, the time required for diagnosis may be extended.

*1: Depress the accelerator pedal until vehicle speed is 90 km/h (56 MPH), then release the accelerator pedal and keep it released for more than 10 seconds. Depress the accelerator pedal until vehicle speed is 90 km/h (56 MPH) again.
*2: Checking the vehicle speed with GST is advised.

Suggested Transmission Gear Position
Set the shift lever in the D position with the overdrive switch turned ON.

TEST VALUE AND TEST LIMIT (GST ONLY — NOT APPLICABLE TO CONSULT-II)

The following is the information specified in Service $06 of ISO 15031-5.
The test value is a parameter used to determine whether a system/circuit diagnostic test is OK or NG while being monitored by the ECM during self-diagnosis. The test limit is a reference value which is specified as the maximum or minimum value and is compared with the test value being monitored.
These data (test value and test limit) are specified by Test ID (TID) and Component ID (CID) and can be displayed on the GST screen.

SRT item	Self-diagnostic test item	DTC	Test value (GST display)		Test limit
			TID	CID	
CATALYST	Three way catalyst function	P0420	01H	01H	Max.
		P0420	02H	81H	Min.
HO2S	Heated oxygen sensor 1	P0133	09H	04H	Max.
		P1143	0AH	84H	Min.
		P1144	0BH	04H	Max.
		P0132	0CH	04H	Max.
		P0134	0DH	04H	Max.
	Heated oxygen sensor 2	P0139	19H	86H	Min.
		P1147	1AH	86H	Min.
		P1146	1BH	06H	Max.
		P0138	1CH	06H	Max.
HO2S HTR	Heated oxygen sensor 1 heater	P0135	29H	08H	Max.
			2AH	88H	Min.
	Heated oxygen sensor 2 heater	P0141	2DH	0AH	Max.
			2EH	8AH	Min.

HOW TO ERASE EMISSION-RELATED DIAGNOSTIC INFORMATION

How to Erase DTC

WITH CONSULT-II

The emission related diagnostic information in the ECM can be erased by selecting “ERASE” in the “SELF-DIAG RESULTS” mode with CONSULT-II.
If DTCs are displayed for both ECM and TCM (Transmission control module), they need to be erased individually from the ECM and TCM (Transmission control module).

NOTE:
If the DTC is not for A/T related items (see EC-803, "INDEX FOR DTC"), skip steps 2 through 4.

1. If the ignition switch stays ON after repair work, be sure to turn ignition switch OFF once. Wait at least 10 seconds and then turn it ON (engine stopped) again.
2. Turn CONSULT-II ON and touch “A/T”.
3. Touch “SELF-DIAG RESULTS”.
4. Touch “ERASE”. [The DTC in the TCM (Transmission control module) will be erased.] Then touch “BACK” twice.
5. Touch “ENGINE”.
6. Touch “SELF-DIAG RESULTS”.
7. Touch “ERASE”. (The DTC in the ECM will be erased.)

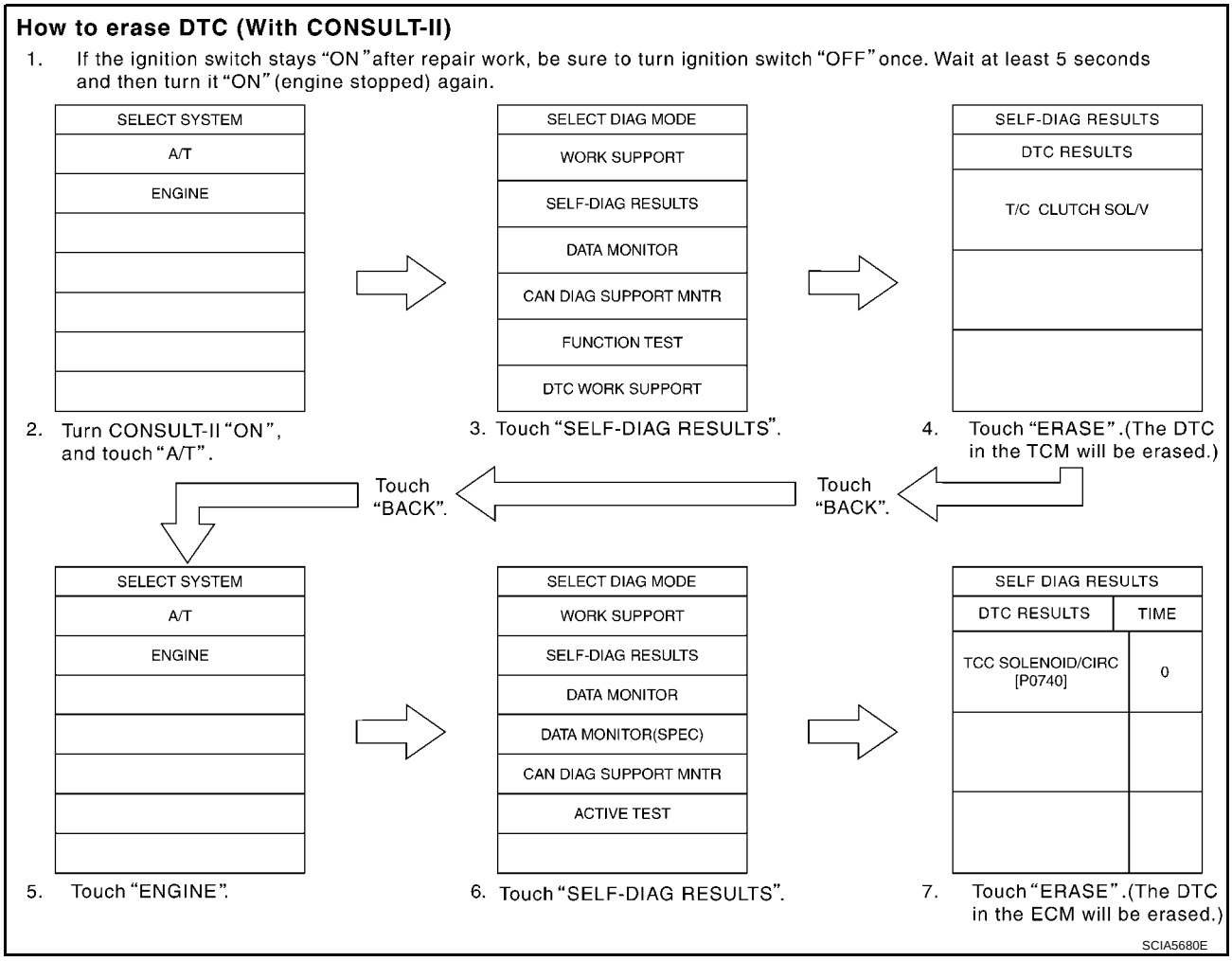

WITH GST

The emission related diagnostic information in the ECM can be erased by selecting Service $04 with GST.

NOTE:

If the DTC is not for A/T related items (see EC-803, "INDEX FOR DTC"), skip step 2.

1. If the ignition switch stays ON after repair work, be sure to turn ignition switch OFF once. Wait at least 10 seconds and then turn it ON (engine stopped) again.
2. Perform AT-98, "OBD Diagnostic Trouble Code (DTC)" . (The DTC in TCM will be erased)
3. Select Service $04 with GST (Generic Scan Tool).

No Tools

NOTE:

If the DTC is not for AT related items (see EC-803, "INDEX FOR DTC"), skip step 2.

1. If the ignition switch stays ON after repair work, be sure to turn ignition switch OFF once. Wait at least 10 seconds and then turn it ON (engine stopped) again.
2. Perform AT-98, "OBD Diagnostic Trouble Code (DTC)" . (The DTC in the TCM will be erased.)
3. Change the diagnostic test mode from Mode II to Mode I by depressing the accelerator pedal. Refer to EC-1269, "HOW TO SWITCH DIAGNOSTIC TEST MODE" .

- **If the battery is disconnected, the emission-related diagnostic information will be lost within 24 hours.**
- **The following data are cleared when the ECM memory is erased.**

– Diagnostic trouble codes
– 1st trip diagnostic trouble codes
– Freeze frame data
– 1st trip freeze frame data
– System readiness test (SRT) codes

– Test values

Actual work procedures are explained using a DTC as an example. Be careful so that not only the DTC, but all of the data listed above, are cleared from the ECM memory during work procedures.

Malfunction Indicator (MI)

BBS0049D

DESCRIPTION

The MI is located on the instrument panel.

1. The MI will light up when the ignition switch is turned ON without the engine running. This is a bulb check.
   If the MI does not light up, check MI circuit. Refer to DI-32, "WARNING LAMPS" , or see EC-1236, "MI & DATA LINK CONNECTORS" .
2. When the engine is started, the MI should go off.
   If the MI remains on, the on board diagnostic system has detected an engine system malfunction.

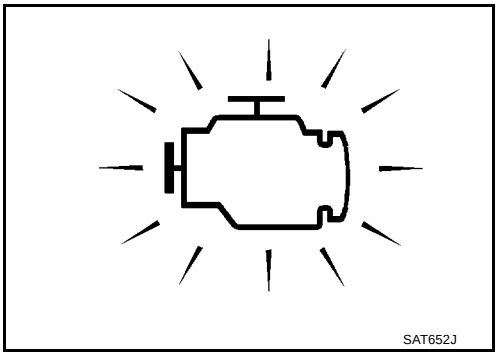

ON BOARD DIAGNOSTIC SYSTEM FUNCTION

The on board diagnostic system has the following four functions.

Diagnostic Test Mode	KEY and ENG. Status	Function	Explanation of Function
Mode I	Ignition switch in ON position Engine stopped	BULB CHECK	This function checks the MI bulb for damage (blown, open circuit, etc.). If the MI does not come on, check MI circuit.
	Engine running	MALFUNCTION WARNING	This is a usual driving condition. When a malfunction is detected twice in two consecutive driving cycles (two trip detection logic), the MI will light up to inform the driver that a malfunction has been detected. The following malfunctions will light up or blink the MI in the 1st trip. ● Misfire (Possible three way catalyst damage) ● One trip detection diagnoses
Mode II	Ignition switch in ON position Engine stopped	SELF-DIAGNOSTIC RESULTS	This function allows DTCs and 1st trip DTCs to be read.
	Engine running	HEATED OXYGEN SENSOR 1 MONITOR	This function allows the fuel mixture condition (lean or rich), monitored by heated oxygen sensor 1, to be read.

When there is an open circuit on MI circuit, the ECM cannot warn the driver by lighting up MI when there is malfunction on engine control system.
Therefore, when electrical controlled throttle and part of ECM related diagnoses are continuously detected as NG for 5 trips, ECM warns the driver that engine control system malfunctions and MI circuit is open by means of operating fail-safe function.

The fail-safe function also operates when above diagnoses except MI circuit are detected and demands the driver to repair the malfunction.

Engine operating condition in fail-safe mode	Engine speed will not rise more than 2,500 rpm due to the fuel cut

MI Flashing Without DTC

If the ECM is in Diagnostic Test Mode II, MI may flash when engine is running. In this case, check ECM diagnostic test mode. How to switch the diagnostic test (function) modes, and details of the above functions are described later. Refer to EC-1269, "HOW TO SWITCH DIAGNOSTIC TEST MODE" .
The following emission-related diagnostic information is cleared when the ECM memory is erased.

- Diagnostic trouble codes
- 1st trip diagnostic trouble codes
- Freeze frame data
- 1st trip freeze frame data
- System readiness test (SRT) codes
- Test values

HOW TO SWITCH DIAGNOSTIC TEST MODE

NOTE:

- **It is better to count the time accurately with a clock.**
- **It is impossible to switch the diagnostic mode when an accelerator pedal position sensor circuit has a malfunction.**
- **Always ECM returns to Diagnostic Test Mode I after ignition switch is turned OFF.**

How to Set Diagnostic Test Mode II (Self-diagnostic Results)

1. Confirm that accelerator pedal is fully released, turn ignition switch ON and wait 3 seconds.
2. Repeat the following procedure quickly five times within 5 seconds.

a. Fully depress the accelerator pedal.
b. Fully release the accelerator pedal.

3. Wait 7 seconds, fully depress the accelerator pedal and keep it for approx. 10 seconds until the MI starts blinking.
4. Fully release the accelerator pedal.
   ECM has entered to Diagnostic Test Mode II (Self-diagnostic results).
   NOTE:
   Wait until the same DTC (or 1st trip DTC) appears to confirm all DTCs certainly.

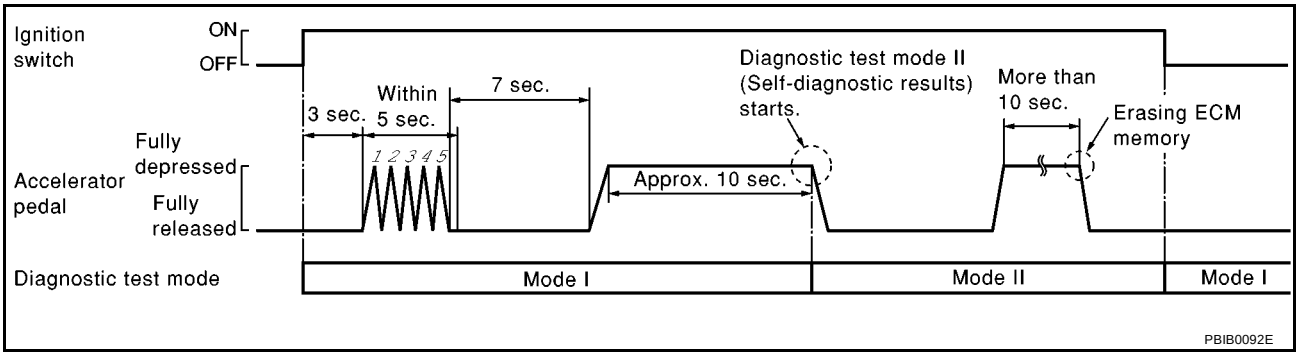

How to Set Diagnostic Test Mode II (Heated Oxygen Sensor 1 Monitor)

1. Set the ECM in Diagnostic Test Mode II (Self-diagnostic results).
   Refer to EC-1269, "How to Set Diagnostic Test Mode II (Self-diagnostic Results)" .
2. Start Engine.
   ECM has entered to Diagnostic Test Mode II (Heated oxygen sensor 1 monitor).

How to Erase Diagnostic Test Mode II (Self-diagnostic Results)

1. Set ECM in Diagnostic Test Mode II (Self-diagnostic results). Refer to EC-1269, "How to Set Diagnostic Test Mode II (Self-diagnostic Results)" .
2. Fully depress the accelerator pedal and keep it for more than 10 seconds.
   The emission-related diagnostic information has been erased from the backup memory in the ECM.

3. Fully release the accelerator pedal, and confirm the DTC 0000 is displayed.

DIAGNOSTIC TEST MODE I — BULB CHECK

In this mode, the MI on the instrument panel should stay ON. If it remains OFF, check MI circuit. Refer to DI-32, "WARNING LAMPS" or see EC-1236, "MI & DATA LINK CONNECTORS" .

DIAGNOSTIC TEST MODE I — MALFUNCTION WARNING

MI	Condition
ON	When the malfunction is detected.
OFF	No malfunction.

This DTC number is clarified in Diagnostic Test Mode II (SELF-DIAGNOSTIC RESULTS)

DIAGNOSTIC TEST MODE II — SELF-DIAGNOSTIC RESULTS

In this mode, the DTC and 1st trip DTC are indicated by the number of blinks of the MI as shown below.
The DTC and 1st trip DTC are displayed at the same time. If the MI does not illuminate in diagnostic test mode I (Malfunction warning), all displayed items are 1st trip DTCs. If only one code is displayed when the MI illuminates in diagnostic test mode II (SELF-DIAGNOSTIC RESULTS), it is a DTC; if two or more codes are displayed, they may be either DTCs or 1st trip DTCs. DTC No. is same as that of 1st trip DTC. These unidentified codes can be identified by using the CONSULT-II or GST. A DTC will be used as an example for how to read a code.

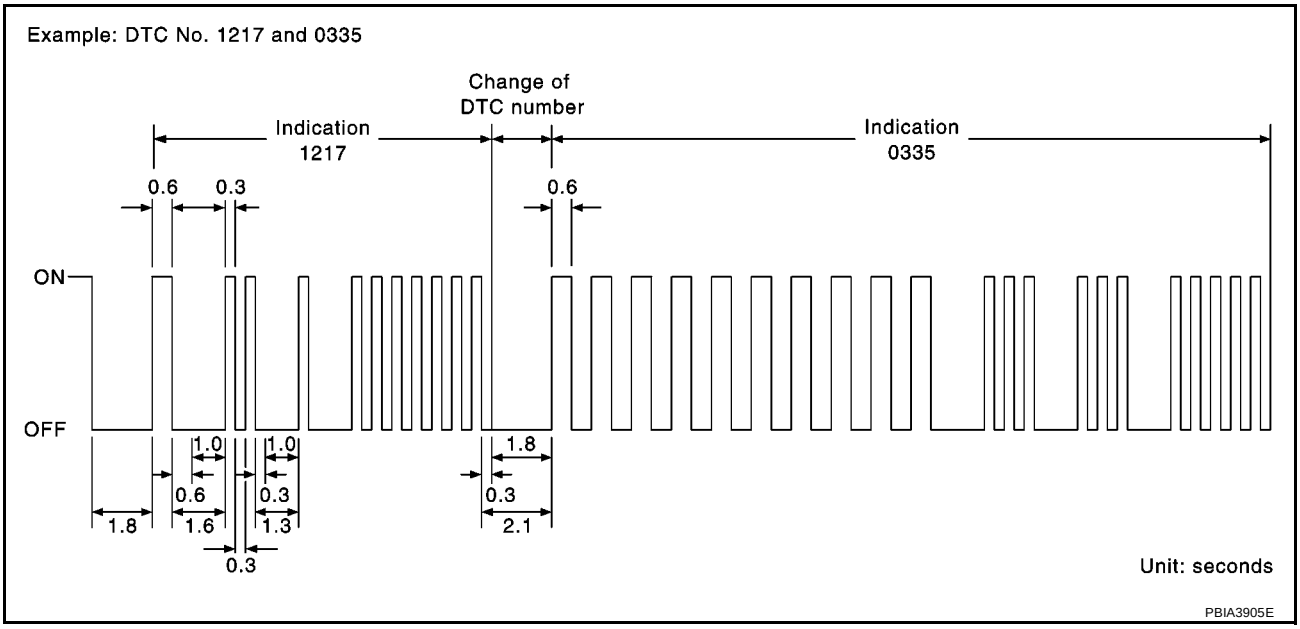

A particular trouble code can be identified by the number of four-digit numeral flashes. The “zero” is indicated by the number of ten flashes. The length of time the 1,000th-digit numeral flashes on and off is 1.2 seconds consisting of an ON (0.6-second) - OFF (0.6-second) cycle.
The 100th-digit numeral and lower digit numerals consist of a 0.3-second ON and 0.3-second OFF cycle.
A change from one digit numeral to another occurs at an interval of 1.0-second OFF. In other words, the later numeral appears on the display 1.3 seconds after the former numeral has disappeared.
A change from one trouble code to another occurs at an interval of 1.8-second OFF.
In this way, all the detected malfunctions are classified by their DTC numbers. The DTC 0000 refers to no malfunction. (See EC-803, "INDEX FOR DTC" .)

How to Erase Diagnostic Test Mode II (Self-diagnostic Results)

The DTC can be erased from the back up memory in the ECM by depressing accelerator pedal. Refer to EC-1269, "How to Erase Diagnostic Test Mode II (Self-diagnostic Results)" .

- **If the battery is disconnected, the DTC will be lost from the backup memory within 24 hours.**
- **Be careful not to erase the stored memory before starting trouble diagnoses.**

DIAGNOSTIC TEST MODE II — HEATED OXYGEN SENSOR 1 MONITOR

In this mode, the MI displays the condition of the fuel mixture (lean or rich) which is monitored by the heated oxygen sensor 1.

MI	Fuel mixture condition in the exhaust gas	Air fuel ratio feedback control condition
ON	Lean	Closed loop system
OFF	Rich	
*Remains ON or OFF	Any condition	Open loop system

*: Maintains conditions just before switching to open loop.

To check the heated oxygen sensor 1 function, start engine in the Diagnostic Test Mode II and warm it up until engine coolant temperature indicator points to the middle of the gauge.
Next run engine at about 2,000 rpm for about 2 minutes under no load conditions. Then make sure that the MI comes ON more than 5 times within 10 seconds with engine running at 2,000 rpm under no load.

OBD System Operation Chart

BBS0049E

RELATIONSHIP BETWEEN MI, 1ST TRIP DTC, DTC, AND DETECTABLE ITEMS

- When a malfunction is detected for the first time, the 1st trip DTC and the 1st trip freeze frame data are stored in the ECM memory.
- When the same malfunction is detected in two consecutive trips, the DTC and the freeze frame data are stored in the ECM memory, and the MI will come on. For details, refer to EC-830, "Two Trip Detection Logic" .
- The MI will go off after the vehicle is driven 3 times (driving pattern B) with no malfunction. The drive is counted only when the recorded driving pattern is met (as stored in the ECM). If another malfunction occurs while counting, the counter will reset.
- The DTC and the freeze frame data will be stored until the vehicle is driven 40 times (driving pattern A) without the same malfunction recurring (except for Misfire and Fuel Injection System). For Misfire and Fuel Injection System, the DTC and freeze frame data will be stored until the vehicle is driven 80 times (driving pattern C) without the same malfunction recurring. The “TIME” in “SELF-DIAGNOSTIC RESULTS” mode of CONSULT-II will count the number of times the vehicle is driven.
- The 1st trip DTC is not displayed when the self-diagnosis results in OK for the 2nd trip.

SUMMARY CHART

Items	Fuel Injection System	Misfire	Other
MI (goes off)	3 (pattern B)	3 (pattern B)	3 (pattern B)
DTC, Freeze Frame Data (no display)	80 (pattern C)	80 (pattern C)	40 (pattern A)
1st Trip DTC (clear)	1 (pattern C), *1	1 (pattern C), *1	1 (pattern B)
1st Trip Freeze Frame Data (clear)	*1, *2	*1, *2	1 (pattern B)

For details about patterns B and C under “Fuel Injection System” and “Misfire”, see EC-848, "EXPLANATION FOR DRIVING PATTERNS FOR “MISFIRE <EXHAUST QUALITY DETERIORATION>”, “FUEL INJECTION SYSTEM”" .
For details about patterns A and B under Other, see EC-850, "EXPLANATION FOR DRIVING PATTERNS EXCEPT FOR “MISFIRE <EXHAUST QUALITY DETERIORATION>”, “FUEL INJECTION SYSTEM”" .
*1: Clear timing is at the moment OK is detected.
*2: Clear timing is when the same malfunction is detected in the 2nd trip.

RELATIONSHIP BETWEEN MI, DTC, 1ST TRIP DTC AND DRIVING PATTERNS FOR “MISFIRE ” <EXHAUST QUALITY DETERIORATION>, “FUEL INJECTION SYSTEM”

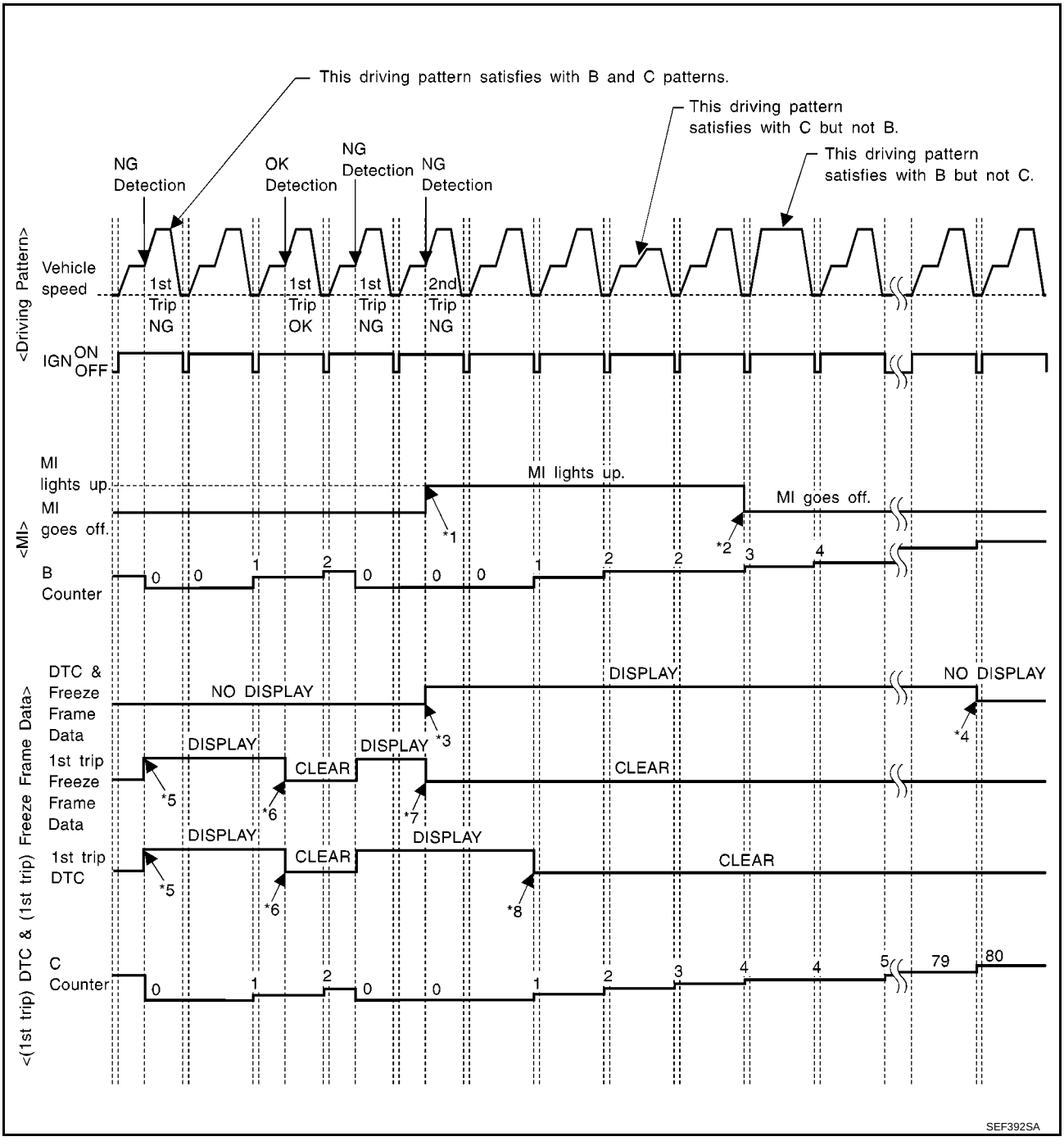

*1: When the same malfunction is detected in two consecutive trips, MI will light up.

*2: MI will go off after vehicle is driven 3 times (pattern B) without any malfunctions.

*3: When the same malfunction is detected in two consecutive trips, the DTC and the freeze frame data will be stored in ECM.

*4: The DTC and the freeze frame data will not be displayed any longer after vehicle is driven 80 times (pattern C) without the same malfunction. (The DTC and the freeze frame data still remain in ECM.)

*5: When a malfunction is detected for the first time, the 1st trip DTC and the 1st trip freeze frame data will be stored in ECM.

*6: The 1st trip DTC and the 1st trip freeze frame data will be cleared at the moment OK is detected.

*7: When the same malfunction is detected in the 2nd trip, the 1st trip freeze frame data will be cleared.

*8: 1st trip DTC will be cleared when vehicle is driven once (pattern C) without the same malfunction after DTC is stored in ECM.

EXPLANATION FOR DRIVING PATTERNS FOR “MISFIRE <EXHAUST QUALITY DETERIORATION>”, “FUEL INJECTION SYSTEM”

<Driving Pattern B>

Driving pattern B means the vehicle operation as follows:
All components and systems should be monitored at least once by the OBD system.

- The B counter will be cleared when the malfunction is detected once regardless of the driving pattern.
- The B counter will be counted up when driving pattern B is satisfied without any malfunction.
- The MI will go off when the B counter reaches 3. (*2 in “OBD SYSTEM OPERATION CHART”)

<Driving Pattern C>

Driving pattern C means the vehicle operation as follows:
The following conditions should be satisfied at the same time:
Engine speed: (Engine speed in the freeze frame data) ±375 rpm
Calculated load value: (Calculated load value in the freeze frame data) x (1±0.1) [%]
Engine coolant temperature (T) condition:

- When the freeze frame data shows lower than 70°C (158°F), T should be lower than 70°C (158°F).
- When the freeze frame data shows higher than or equal to 70°C (158°F), T should be higher than or equal to 70°C (158°F).

Example:
If the stored freeze frame data is as follows:
Engine speed: 850 rpm, Calculated load value: 30%, Engine coolant temperature: 80°C (176°F)
To be satisfied with driving pattern C, the vehicle should run under the following conditions:
Engine speed: 475 - 1,225 rpm, Calculated load value: 27 - 33%, Engine coolant temperature: more than 70°C (158°F)

- The C counter will be cleared when the malfunction is detected regardless of vehicle conditions above.
- The C counter will be counted up when vehicle conditions above is satisfied without the same malfunction.
- The DTC will not be displayed after C counter reaches 80.
- The 1st trip DTC will be cleared when C counter is counted once without the same malfunction after DTC is stored in ECM.

RELATIONSHIP BETWEEN MI, DTC, 1ST TRIP DTC AND DRIVING PATTERNS EXCEPT FOR "MISFIRE <EXHAUST QUALITY DETERIORATION>", "FUEL INJECTION SYSTEM"

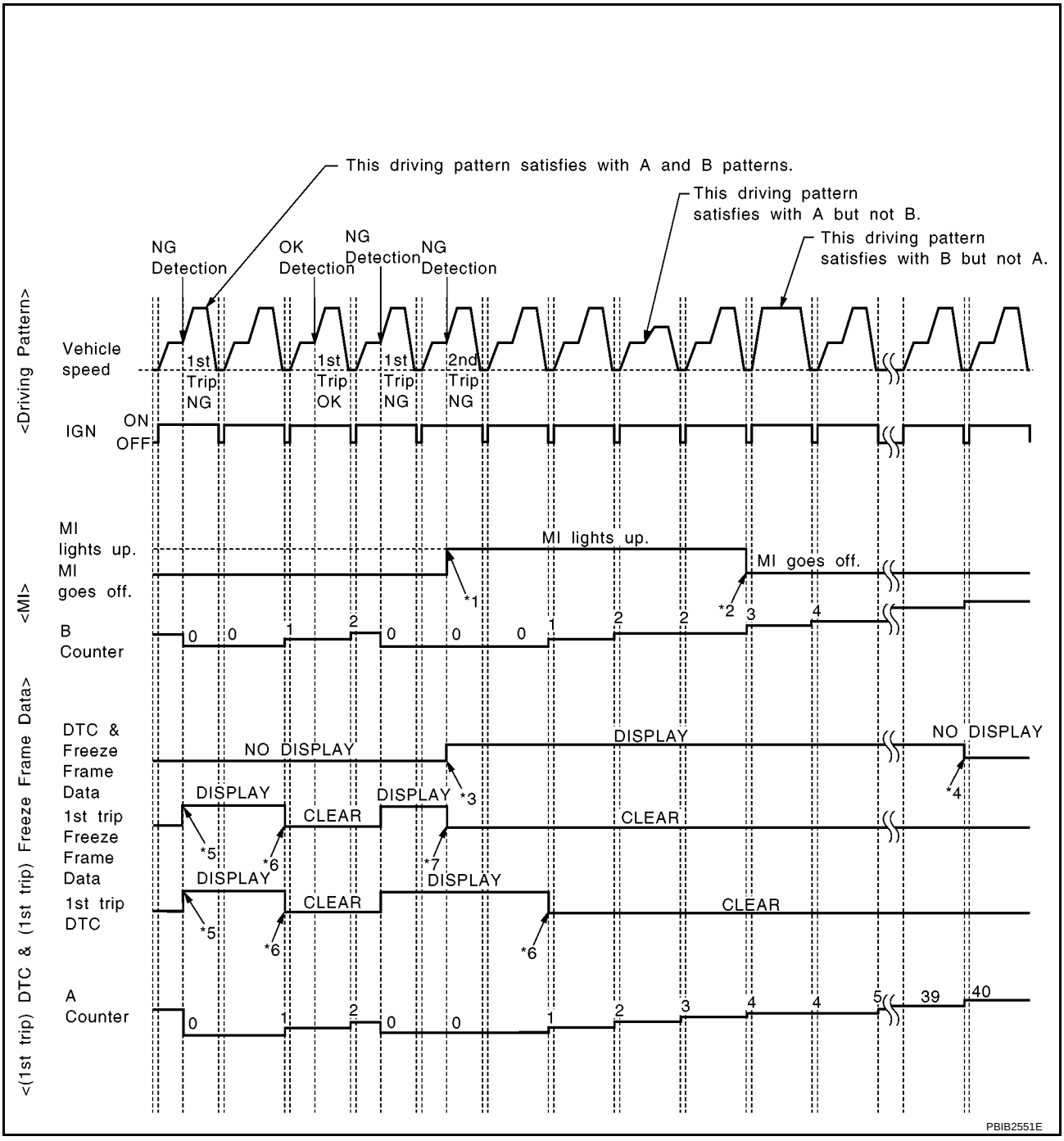

*1: When the same malfunction is detected in two consecutive trips, MI will light up.

*2: MI will go off after vehicle is driven 3 times (pattern B) without any malfunctions.

*3: When the same malfunction is detected in two consecutive trips, the DTC and the freeze frame data will be stored in ECM.

*4: The DTC and the freeze frame data will not be displayed any longer after vehicle is driven 40 times (pattern A) without the same malfunction. (The DTC and the freeze frame data still remain in ECM.)

*5: When a malfunction is detected for the first time, the 1st trip DTC and the 1st trip freeze frame data will be stored in ECM.

*6: 1st trip DTC will be cleared after vehicle is driven once (pattern B) without the same malfunction.

*7: When the same malfunction is detected in the 2nd trip, the 1st trip freeze frame data will be cleared.

EXPLANATION FOR DRIVING PATTERNS EXCEPT FOR "MISFIRE <EXHAUST QUALITY DETERIORATION>", "FUEL INJECTION SYSTEM"

<Driving Pattern A>

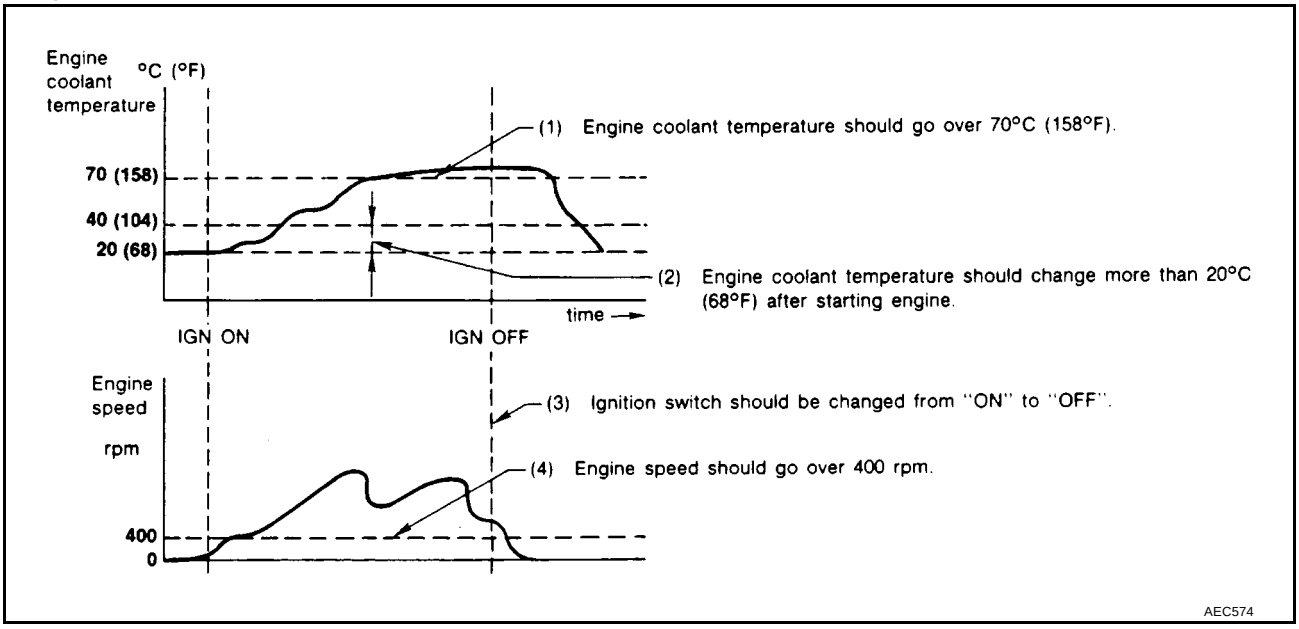

- The A counter will be cleared when the malfunction is detected regardless of (1) - (4).
- The A counter will be counted up when (1) - (4) are satisfied without the same malfunction.
- The DTC will not be displayed after the A counter reaches 40.

<Driving Pattern B>

Driving pattern B means the vehicle operation as follows:
All components and systems should be monitored at least once by the OBD system.

- The B counter will be cleared when the malfunction is detected once regardless of the driving pattern.
- The B counter will be counted up when driving pattern B is satisfied without any malfunctions.
- The MI will go off when the B counter reaches 3 (*2 in OBD SYSTEM OPERATION CHART).

BASIC SERVICE PROCEDURE

PFP:00018

Basic Inspection

BBS0049F

1. INSPECTION START

1. Check service records for any recent repairs that may indicate a related malfunction, or a current need for scheduled maintenance.
2. Open engine hood and check the following:
- Harness connectors for improper connections
- Wiring harness for improper connections, pinches and cut
- Vacuum hoses for splits, kinks and improper connections
- Hoses and ducts for leaks
- Air cleaner clogging
- Gasket
3. Confirm that electrical or mechanical loads are not applied.
- Headlamp switch is OFF.
- Air conditioner switch is OFF.
- Rear window defogger switch is OFF.
- Steering wheel is in the straight-ahead position, etc.
4. Start engine and warm it up until engine coolant temperature indicator points the middle of gauge.
   Ensure engine stays below 1,000 rpm.

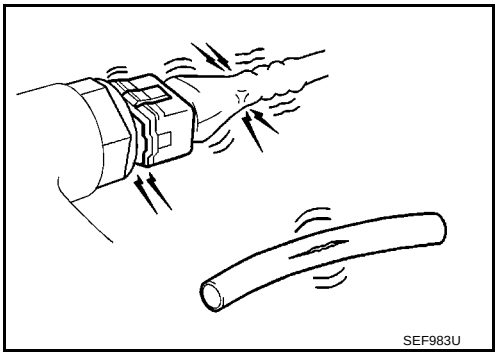

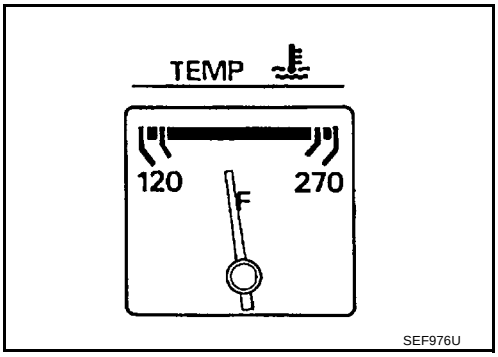

5. Run engine at about 2,000 rpm for about 2 minutes under no load.
6. Make sure that no DTC is displayed with CONSULT-II or GST.

OK or NG

OK >> GO TO 3.
NG >> GO TO 2.

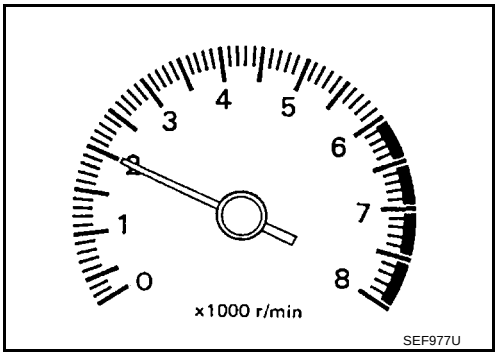

2. REPAIR OR REPLACE

Repair or replace components as necessary according to corresponding Diagnostic Procedure.

>> GO TO 3

3. CHECK TARGET IDLE SPEED

With CONSULT-II

1. Run engine at about 2,000 rpm for about 2 minutes under no load.
2. Rev engine (2,000 to 3,000 rpm) two or three times under no load, then run engine at idle speed for about 1 minute.

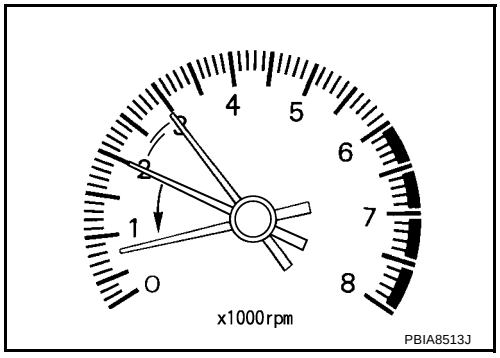

3. Read idle speed in “DATA MONITOR” mode with CONSULT-II. Refer to EC-856, "IDLE SPEED" .

   A/T: 700 ± 50 rpm (in P or N position)

   M/T: 650 ± 50 rpm (in Neutral position)

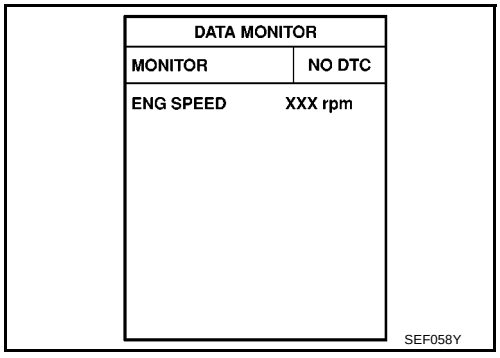

Without CONSULT-II

1. Run engine at about 2,000 rpm for about 2 minutes under no load.
2. Rev engine (2,000 to 3,000 rpm) two or three times under no load, then run engine at idle speed for about 1 minute.
3. Check idle speed.
   Refer to EC-856, "IDLE SPEED" .

   A/T: 700 ± 50 rpm (in P or N position)

   M/T: 650 ± 50 rpm (in Neutral position)

OK or NG

OK >> GO TO 10.
NG >> GO TO 4.

4. PERFORM ACCELERATOR PEDAL RELEASED POSITION LEARNING

1. Stop engine.
2. Perform EC-857, "Accelerator Pedal Released Position Learning" .

>> GO TO 5.

5. PERFORM THROTTLE VALVE CLOSED POSITION LEARNING

Perform EC-857, "Throttle Valve Closed Position Learning" .

>> GO TO 6.

6. PERFORM IDLE AIR VOLUME LEARNING

Refer to EC-858, "Idle Air Volume Learning" .

Is Idle Air Volume Learning carried out successfully?

Yes or No

Yes >> GO TO 7.

No >> 1. Follow the instruction of Idle Air Volume Learning.
2. GO TO 4.

7. CHECK TARGET IDLE SPEED AGAIN

With CONSULT-II

1. Start engine and warm it up to normal operating temperature.
2. Read idle speed in “DATA MONITOR” mode with CONSULT-II. Refer to EC-856, "IDLE SPEED" .

A/T: 700 ± 50 rpm (in P or N position)

M/T: 650 ± 50 rpm (in Neutral position)

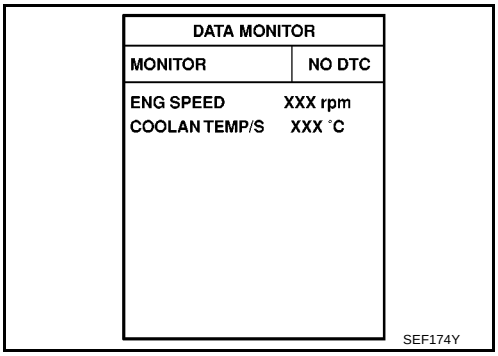

Without CONSULT-II

1. Start engine and warm it up to normal operating temperature.
2. Check idle speed. Refer to EC-856, "IDLE SPEED" .

A/T: 700 ± 50 rpm (in P or N position)

M/T: 650 ± 50 rpm (in Neutral position)

OK or NG

OK >> GO TO 10.

NG >> GO TO 8.

8. DETECT MALFUNCTIONING PART

Check the Following.

- Check camshaft position sensor (PHASE) and circuit. Refer to EC-1049, "DTC P0340 CMP SENSOR (PHASE)" .
- Check crankshaft position sensor (POS) and circuit. Refer to EC-1042, "DTC P0335 CKP SENSOR (POS)" .

OK or NG

OK >> GO TO 9.

NG >> 1. Repair or replace.
2. GO TO 4.

9. CHECK ECM FUNCTION

1. Substitute another known-good ECM to check ECM function. (ECM may be the cause of an incident, but this is a rare case.)
2. Perform initialization of NATS system and registration of all NATS ignition key IDs. Refer to BL-218, "ECM Re-communicating Function" .

>> GO TO 4.

10. CHECK IGNITION TIMING

1. Run engine at idle.
2. Check ignition timing with a timing light.
   Refer to EC-856, "IGNITION TIMING" .

– Timing indicator (1)

A/T: 6 ± 5° BTDC (in P or N position)

M/T: 6 ± 5° BTDC (in Neutral position)

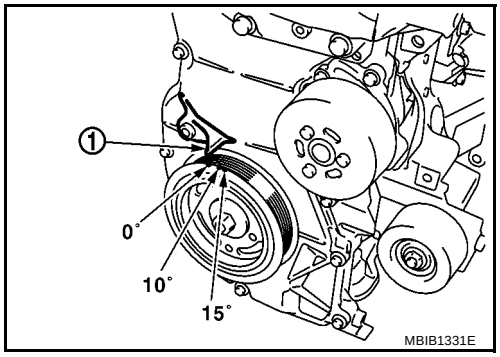

OK or NG

OK >> **INSPECTION END**
NG >> GO TO 11.

11. PERFORM ACCELERATOR PEDAL RELEASED POSITION LEARNING

1. Stop engine.
2. Perform EC-857, "Accelerator Pedal Released Position Learning" .

>> GO TO 12.

12. PERFORM THROTTLE VALVE CLOSED POSITION LEARNING

Perform EC-857, "Throttle Valve Closed Position Learning" .

>> GO TO 13.

13. PERFORM IDLE AIR VOLUME LEARNING

Refer to EC-858, "Idle Air Volume Learning" .
Is Idle Air Volume Learning carried out successfully?

Yes or No

Yes >> GO TO 14.
No >> 1. Follow the instruction of Idle Air Volume Learning.
2. GO TO 4.

14. CHECK TARGET IDLE SPEED AGAIN

With CONSULT-II

1. Start engine and warm it up to normal operating temperature.
2. Read idle speed in “DATA MONITOR” mode with CONSULT-II.
   Refer to EC-856, "IDLE SPEED" .

A/T: 700 ± 50 rpm (in P or N position)

M/T: 650 ± 50 rpm (in Neutral position)

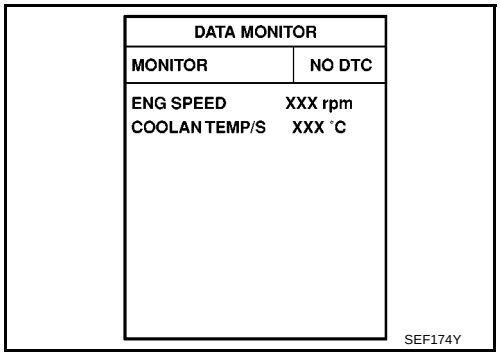

Without CONSULT-II

1. Start engine and warm it up to normal operating temperature.
2. Check idle speed.
   Refer to EC-856, "IDLE SPEED" .

A/T: 700 ± 50 rpm (in P or N position)

M/T: 650 ± 50 rpm (in Neutral position)

OK or NG

OK >> GO TO 15.
NG >> GO TO 17.

15. CHECK IGNITION TIMING AGAIN

1. Run engine at idle.
2. Check ignition timing with a timing light.
   Refer to EC-856, "IGNITION TIMING" .

– Timing indicator (1)

A/T: 6 ± 5° BTDC (in P or N position)
M/T: 6 ± 5° BTDC (in Neutral position)

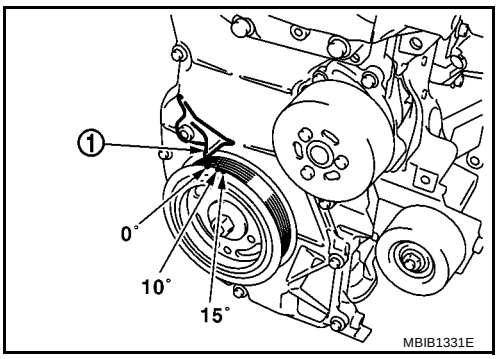

OK or NG

OK >> **INSPECTION END**
NG >> GO TO 16.

16. CHECK TIMING CHAIN INSTALLATION

Check timing chain installation. Refer to EM-142, "TIMING CHAIN" .

OK or NG

OK >> GO TO 17.
NG >> 1. Repair the timing chain installation.
2. GO TO 4.

17. DETECT MALFUNCTIONING PART

Check the following.

- Check camshaft position sensor (PHASE) and circuit. Refer to EC-1049, "DTC P0340 CMP SENSOR (PHASE)" .
- Check crankshaft position sensor (POS) and circuit. Refer to EC-1042, "DTC P0335 CKP SENSOR (POS)" .

OK or NG

OK >> GO TO 18.
NG >> 1. Repair or replace.
2. GO TO 4.

18. CHECK ECM FUNCTION

1. Substitute another known-good ECM to check ECM function. (ECM may be the cause of an incident, but this is a rare case.)
2. Perform initialization of NATS system and registration of all NATS ignition key IDs. Refer to BL-218, "ECM Re-communicating Function" .

>> GO TO 4.

Idle Speed and Ignition Timing Check

BBS0049G

IDLE SPEED

With CONSULT-II

Check idle speed in “DATA MONITOR” mode with CONSULT-II.

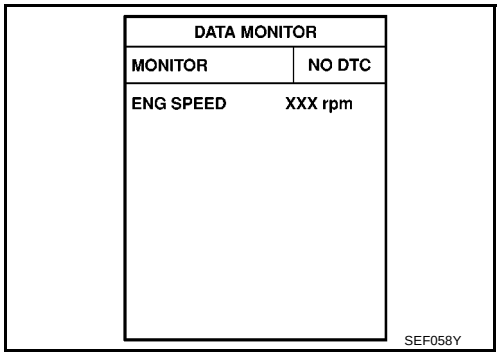

With GST

Check idle speed with GST.

IGNITION TIMING

Any of following two methods may be used.

Method A

1. Attach timing light A to loop wire (1) as shown.
   - ⇦: Vehicle front

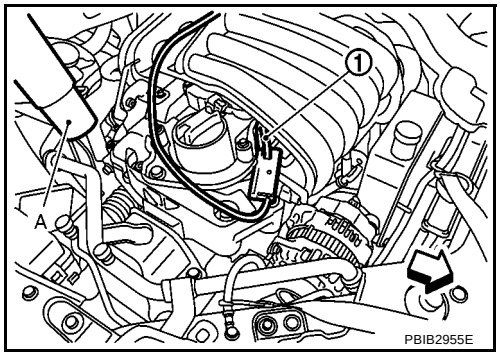

2. Check ignition timing.
   - Timing indicator (1)

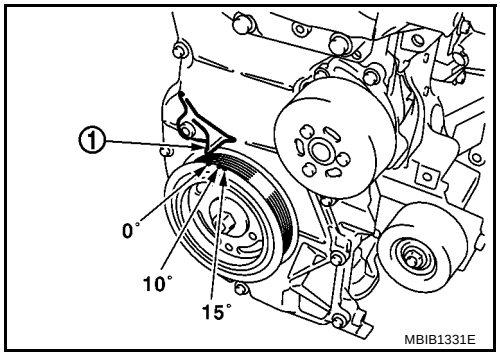

Method B

1. Remove ignition coil No. 4 (1).
   - ⇦: Vehicle front

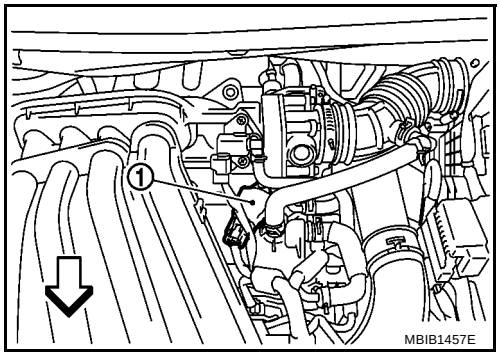

2. Connect ignition coil No. 4 (1) and spark plug No. 4 with suitable high-tension wire A as shown, and attach timing light clamp B to this wire.

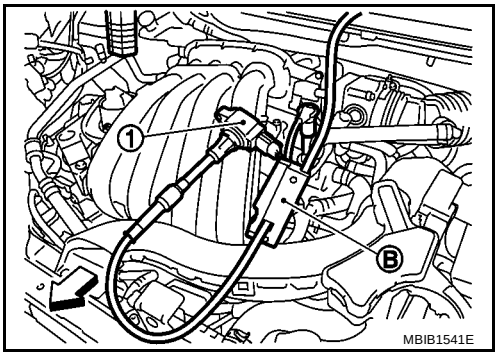

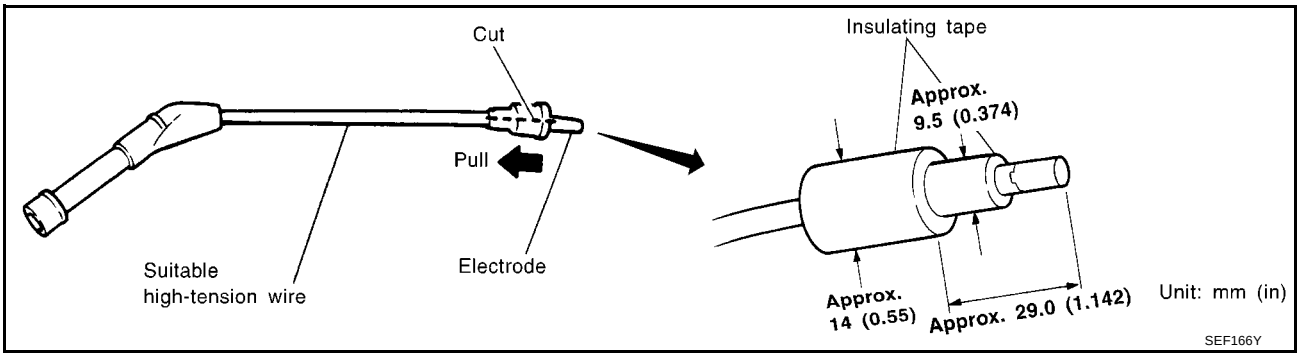

3. Check ignition timing.
   - Timing indicator (1)

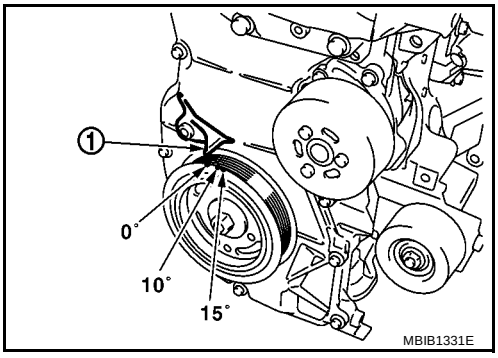

Accelerator Pedal Released Position Learning

BBS0049H

DESCRIPTION

Accelerator Pedal Released Position Learning is an operation to learn the fully released position of the accelerator pedal by monitoring the accelerator pedal position sensor output signal. It must be performed each time harness connector of accelerator pedal position sensor or ECM is disconnected.

OPERATION PROCEDURE

1. Make sure that accelerator pedal is fully released.
2. Turn ignition switch ON and wait at least 2 seconds.
3. Turn ignition switch OFF and wait at least 10 seconds.
4. Turn ignition switch ON and wait at least 2 seconds.
5. Turn ignition switch OFF and wait at least 10 seconds.

Throttle Valve Closed Position Learning

BBS0049I

DESCRIPTION

Throttle Valve Closed Position Learning is an operation to learn the fully closed position of the throttle valve by monitoring the throttle position sensor output signal. It must be performed each time harness connector of electric throttle control actuator or ECM is disconnected.

OPERATION PROCEDURE

1. Make sure that accelerator pedal is fully released.
2. Turn ignition switch ON.
3. Turn ignition switch OFF and wait at least 10 seconds.

Make sure that throttle valve moves during above 10 seconds by confirming the operating sound.

Idle Air Volume Learning

BBS0049J

DESCRIPTION

Idle Air Volume Learning is an operation to learn the idle air volume that keeps each engine within the specific range. It must be performed under any of the following conditions:

- Each time electric throttle control actuator or ECM is replaced.
- Idle speed or ignition timing is out of specification.

PREPARATION

Before performing Idle Air Volume Learning, make sure that all of the following conditions are satisfied. Learning will be cancelled if any of the following conditions are missed for even a moment.

- Battery voltage: More than 12.9V (At idle)
- Engine coolant temperature: 70 - 95°C (158 - 203°F)
- PNP switch: ON
- Electric load switch: OFF
  (Air conditioner, headlamp, rear window defogger)
  On vehicles equipped with daytime light systems, set lighting switch to the 1st position to light only small lamps.
- Steering wheel: Neutral (Straight-ahead position)
- Vehicle speed: Stopped
- Transmission: Warmed-up
  - A/T models
    - With CONSULT-II: Drive vehicle until “FLUID TEMP SE” in “DATA MONITOR” mode of “A/T” system indicates less than 0.9V.
    - Without CONSULT-II: Drive vehicle for 10 minutes.
  - M/T models
    - Drive vehicle for 10 minutes.

OPERATION PROCEDURE

With CONSULT-II

1. Perform EC-857, "Accelerator Pedal Released Position Learning" .
2. Perform EC-857, "Throttle Valve Closed Position Learning" .
3. Start engine and warm it up to normal operating temperature.
4. Check that all items listed under the topic PREPARATION (previously mentioned) are in good order.
5. Select “IDLE AIR VOL LEARN” in “WORK SUPPORT” mode.

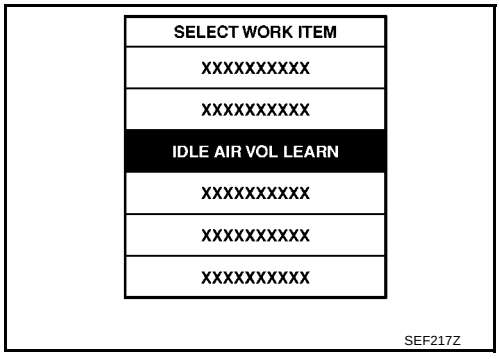

6. Touch “START” and wait 20 seconds.

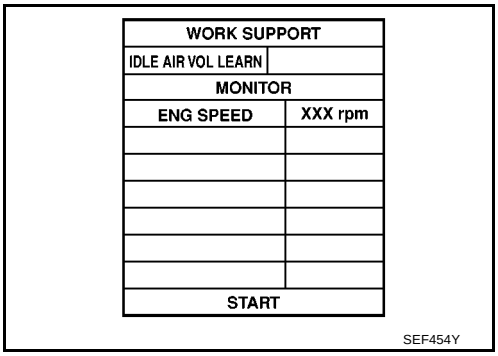

7. Make sure that “CMPLT” is displayed on CONSULT-II screen. If “CMPLT” is not displayed, Idle Air Volume Learning will not be carried out successfully. In this case, find the cause of the incident by referring to the DIAGNOSTIC PROCEDURE below.
8. Rev up the engine two or three times and make sure that idle speed and ignition timing are within the specifications.

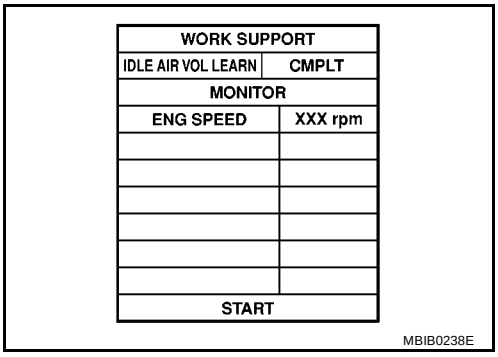

ITEM	SPECIFICATION
Idle speed	A/T: 700 ± 50 rpm (in P or N position) M/T: 650 ± 50 rpm (in Neutral position)
Ignition timing	A/T: 6 ± 5° BTDC (in P or N position) M/T: 6 ± 5° BTDC (in Neutral position)

Without CONSULT-II

NOTE:

- **It is better to count the time accurately with a clock.**
- **It is impossible to switch the diagnostic mode when an accelerator pedal position sensor circuit has a malfunction.**

1. Perform EC-857, "Accelerator Pedal Released Position Learning" .
2. Perform EC-857, "Throttle Valve Closed Position Learning" .
3. Start engine and warm it up to normal operating temperature.
4. Check that all items listed under the topic PREPARATION (previously mentioned) are in good order.
5. Turn ignition switch OFF and wait at least 10 seconds.
6. Confirm that accelerator pedal is fully released, turn ignition switch ON and wait 3 seconds.
7. Repeat the following procedure quickly five times within 5 seconds.

a. Fully depress the accelerator pedal.
b. Fully release the accelerator pedal.

8. Wait 7 seconds, fully depress the accelerator pedal and keep it for approx. 20 seconds until the MI stops blinking and turned ON.
9. Fully release the accelerator pedal within 3 seconds after the MI turned ON.
10. Start engine and let it idle.
11. Wait 20 seconds.

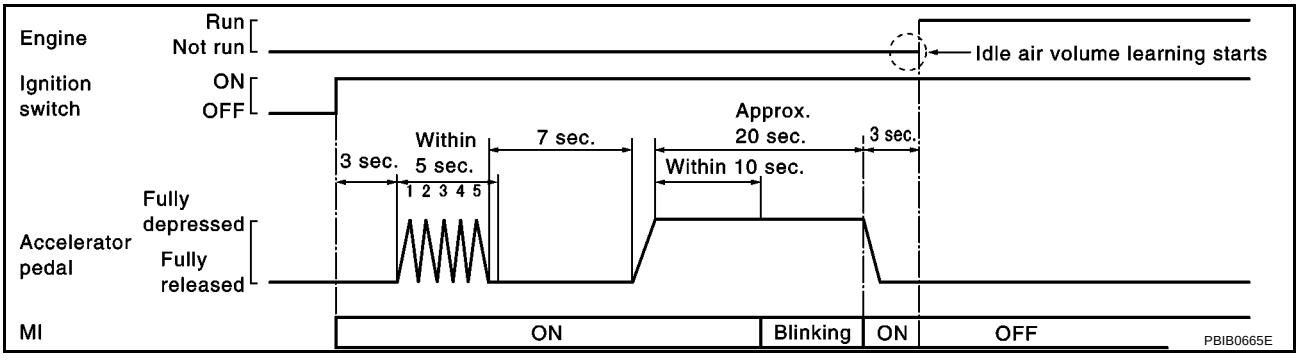

12. Rev up the engine two or three times and make sure that idle speed and ignition timing are within the specifications.

ITEM	SPECIFICATION
Idle speed	A/T: 700 ± 50 rpm (in P or N position) M/T: 650 ± 50 rpm (in Neutral position)
Ignition timing	A/T: 6 ± 5° BTDC (in P or N position) M/T: 6 ± 5° BTDC (in Neutral position)

13. If idle speed and ignition timing are not within the specification, Idle Air Volume Learning will not be carried out successfully. In this case, find the cause of the incident by referring to the Diagnostic Procedure below.

DIAGNOSTIC PROCEDURE

If idle air volume learning cannot be performed successfully, proceed as follows:

1. **Check that throttle valve is fully closed.**
2. **Check PCV valve operation.**
3. **Check that downstream of throttle valve is free from air leakage.**
4. **When the above three items check out OK, engine component parts and their installation condition are questionable. Check and eliminate the cause of the incident.**
   It is useful to perform **EC-1237, "SERVICE DATA AND SPECIFICATIONS (SDS)"** **.**
5. **If any of the following conditions occur after the engine has started, eliminate the cause of the incident and perform Idle Air Volume Learning all over again:**

- **Engine stalls.**
- **Erroneous idle.**

Fuel Pressure Check

BBS0049K

FUEL PRESSURE RELEASE

With CONSULT-II

1. Turn ignition switch ON.
2. Perform “FUEL PRESSURE RELEASE” in “WORK SUPPORT” mode with CONSULT-II.
3. Start engine.
4. After engine stalls, crank it two or three times to release all fuel pressure.
5. Turn ignition switch OFF.

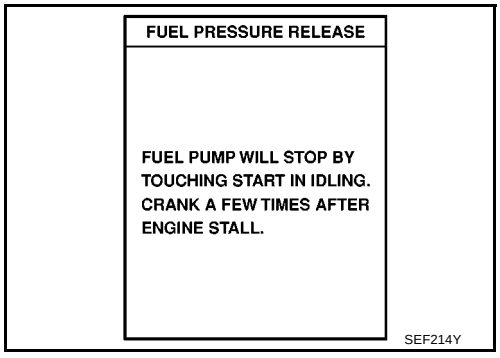

Without CONSULT-II

1. Remove fuel pump fuse located in IPDM E/R.
2. Start engine.
3. After engine stalls, crank it 2 or 3 times to release all fuel pressure.
4. Turn ignition switch OFF.
5. Reinstall fuel pump fuse after servicing fuel system.

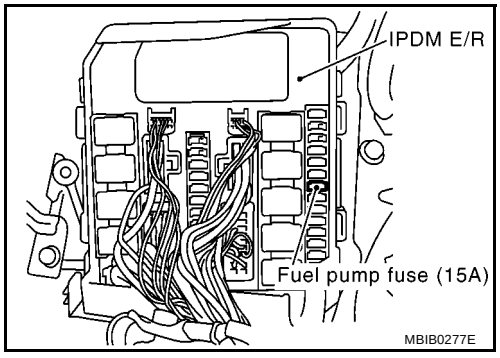

FUEL PRESSURE CHECK

CAUTION:

- **Before disconnecting fuel line, release fuel pressure from fuel line to eliminate danger.**
- **The fuel hose connection method used when taking fuel pressure check must not be used for other purposes.**

- **Be careful not to scratch or put debris around connection area when servicing, so that the quick connector maintains sealability with O-rings inside.**
- **Do not perform fuel pressure check with electrical systems operating (i.e. lights, rear defogger, A/C, etc.) Fuel pressure gauge may indicate false readings due to varying engine load and changes in manifold vacuum.**

NOTE:
Prepare pans or saucers under the disconnected fuel line because the fuel may spill out. The fuel pressure cannot be completely released because E11 models do not have fuel return system.

1. Release fuel pressure to zero. Refer to EC-860, "FUEL PRESSURE RELEASE" .
2. Prepare fuel hose for fuel pressure check B and fuel tube adapter (KV10118400) D, then connect fuel pressure gauge A.
   - ⇦: To quick connector
   - ⬅: To fuel tube (engine side)
   - C: Clamp
   - Use suitable fuel hose for fuel pressure check (genuine NISSAN fuel hose without quick connector).
   - To avoid unnecessary force or tension to hose, use moderately long fuel hose for fuel pressure check.
   - Do not use the fuel hose for checking fuel pressure with damage or cracks on it.
   - Use Pressure Gauge to check fuel pressure.

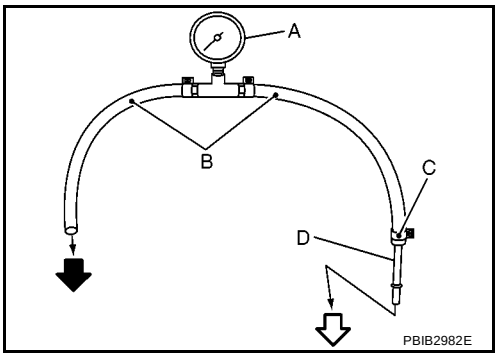

3. Remove fuel hose. Refer to EM-120, "INTAKE MANIFOLD" .
   - Do not twist or kink fuel hose because it is plastic hose.
4. Connect fuel hose for fuel pressure check (1) to fuel tube (engine side) with clamp (2) as shown in the figure.
   - No.2 spool (5)
   - Wipe off oil or dirt from hose insertion part using cloth moistened with gasoline.
   - Apply proper amount of gasoline between top of the fuel tube (3) and No.1 spool (4).
   - Insert fuel hose for fuel pressure check until it touches the No.1 spool on fuel tube.
   - Use NISSAN genuine hose clamp (part number: 16439 N4710 or 16439 40U00).
   - When reconnecting fuel line, always use new clamps.
   - Use a torque driver to tighten clamps.
   - Install hose clamp to the position within 1 - 2 mm (0.04 - 0.08 in).

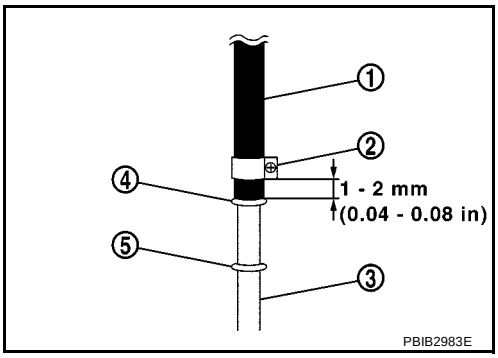

   Tightening torque: 1 - 1.5 N·m (0.1 - 0.15 kg-m, 9 - 13 in-lb)

   - Make sure that clamp screw does not contact adjacent parts.
5. Connect fuel tube adapter to quick connector.
   - A: Fuel pressure gauge
   - B: Fuel hose for fuel pressure check
6. After connecting fuel hose for fuel pressure check, pull the hose with a force of approximately 98 N (10 kg, 22 lb) to confirm fuel tube does not come off.
7. Turn ignition switch ON and check for fuel leakage.
8. Start engine and check for fuel leakage.
9. Read the indication of fuel pressure gauge.
   - Do not perform fuel pressure check with system operating. Fuel pressure gauge may indicate false readings.
   - During fuel pressure check, confirm for fuel leakage from fuel connection every 3 minutes.

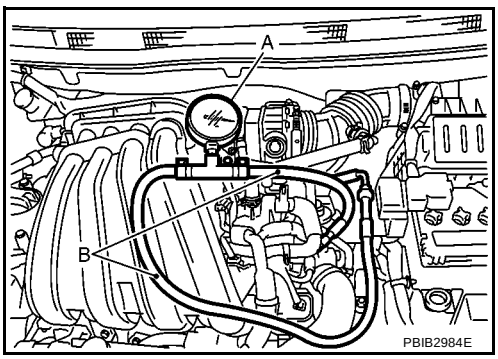

At idling: **Approximately 350 kPa (3.5 bar, 3.57 kg/cm^2 , 51 psi)**

10. If result is unsatisfactory, go to next step.
11. Check the following.
    - Fuel hoses and fuel tubes for clogging
    - Fuel filter for clogging
    - Fuel pump
    - Fuel pressure regulator for clogging

    If OK, replace fuel pressure regulator.
    If NG, repair or replace.

TROUBLE DIAGNOSIS

PFP:00004

Trouble Diagnosis Introduction

BBS0049L

INTRODUCTION

The engine has an ECM to control major systems such as fuel control, ignition control, idle air control system, etc. The ECM accepts input signals from sensors and instantly drives actuators. It is essential that both input and output signals are proper and stable. At the same time, it is important that there are no malfunctions such as vacuum leaks, fouled spark plugs, or other malfunctions with the engine.

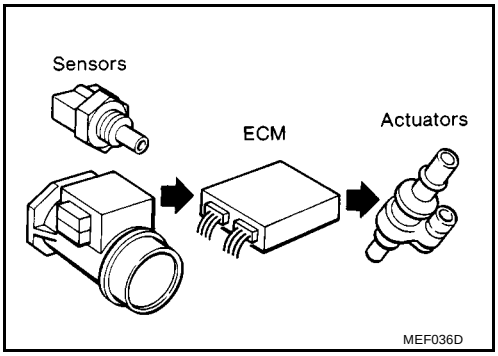

It is much more difficult to diagnose an incident that occurs intermittently rather than continuously. Most intermittent incidents are caused by poor electric connections or improper wiring. In this case, careful checking of suspected circuits may help prevent the replacement of good parts.

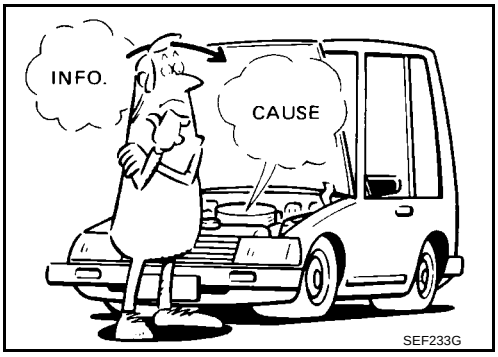

A visual check only may not find the cause of the incidents. A road test with CONSULT-II (or GST) or a circuit tester connected should be performed. Follow the Work Flow on EC-864, "WORK FLOW" .
Before undertaking actual checks, take a few minutes to talk with a customer who approaches with a driveability complaint. The customer can supply good information about such incidents, especially intermittent ones. Find out what symptoms are present and under what conditions they occur. A Diagnostic Worksheet like the example on EC-868, "Worksheet Sample" should be used.
Start your diagnosis by looking for conventional malfunctions first. This will help troubleshoot driveability malfunctions on an electronically controlled engine vehicle.

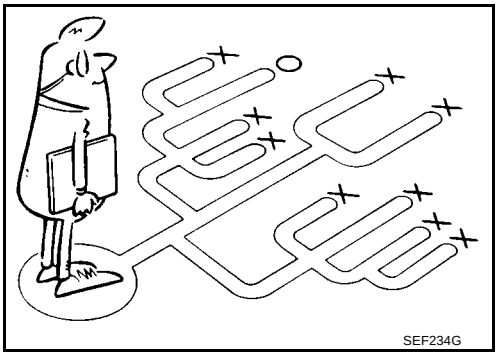

WORK FLOW
Overall Sequence

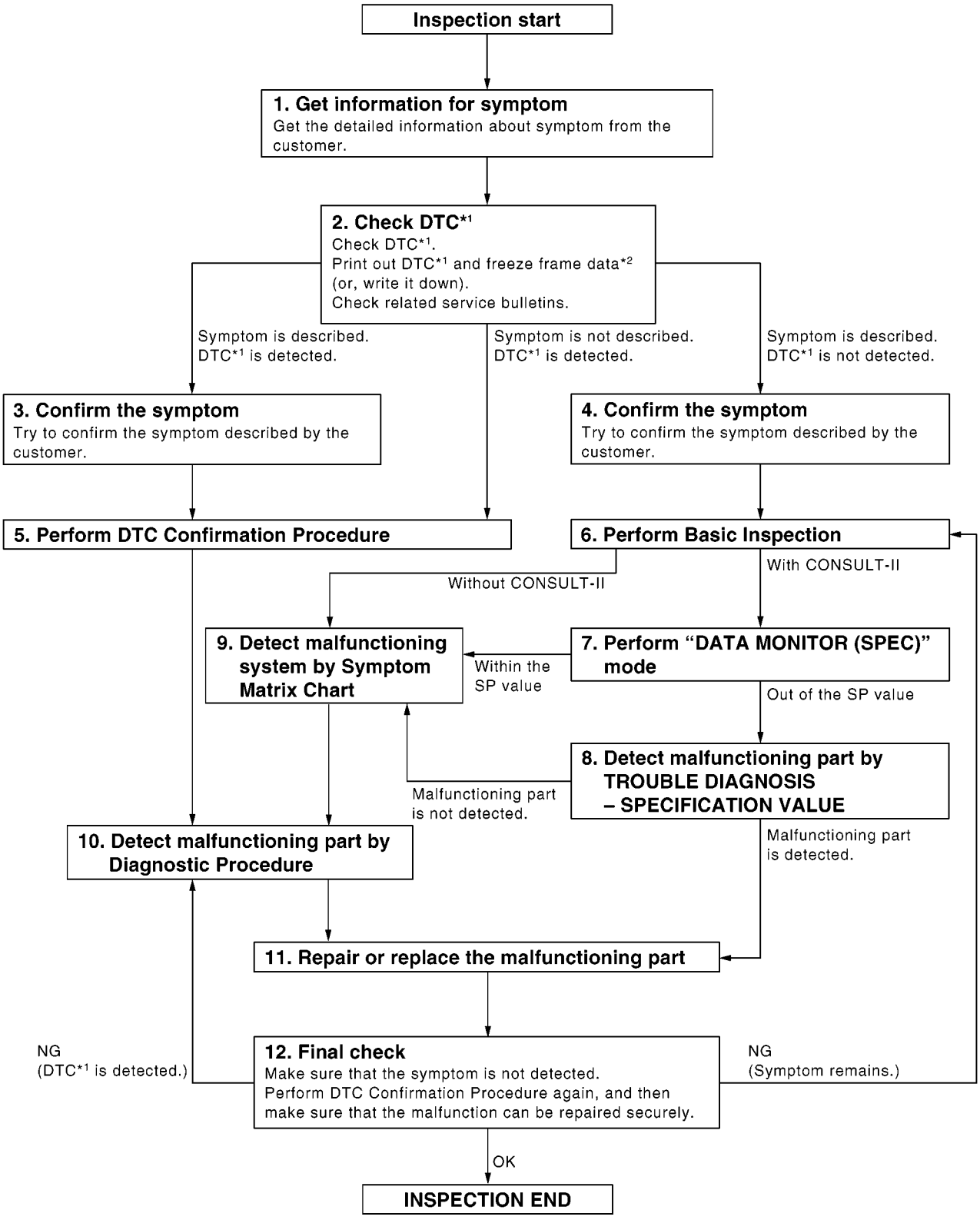

*1: Include 1st trip DTC.
*2: Include 1st trip freeze frame data.

PBIB2267E

Detailed Flow

1. GET INFORMATION FOR SYMPTOM

Get the detailed information from the customer about the symptom (the condition and the environment when the incident/malfunction occurred) using the EC-867, "DIAGNOSTIC WORKSHEET" .

>> GO TO 2.

2. CHECK DTC*1

1. Check DTC*1 .
2. Perform the following procedure if DTC*1 is displayed.

- Record DTC*1 and freeze frame data*2 . (Print them out with CONSULT-II or GST.)
- Erase DTC*1 . (Refer to EC-841, "HOW TO ERASE EMISSION-RELATED DIAGNOSTIC INFORMATION" .)
- Study the relationship between the cause detected by DTC*1 and the symptom described by the customer. (Symptom Matrix Chart is useful. Refer to EC-871, "Symptom Matrix Chart" .)

3. Check related service bulletins for information.

Is any symptom described and any DTC detected?

Symptom is described, DTC*1 is displayed>>GO TO 3.
Symptom is described, DTC*1 is not displayed>>GO TO 4.
Symptom is not described, DTC*1 is displayed>>GO TO 5.

3. CONFIRM THE SYMPTOM

Try to confirm the symptom described by the customer (except MI ON).
DIAGNOSIS WORK SHEET is useful to verify the incident.
Connect CONSULT-II to the vehicle in “DATA MONITOR (AUTO TRIG)” mode and check real time diagnosis results.
Verify relation between the symptom and the condition when the symptom is detected.

>> GO TO 5.

4. CONFIRM THE SYMPTOM

Try to confirm the symptom described by the customer.
DIAGNOSIS WORK SHEET is useful to verify the incident.
Connect CONSULT-II to the vehicle in “DATA MONITOR (AUTO TRIG)” mode and check real time diagnosis results.
Verify relation between the symptom and the condition when the symptom is detected.

>> GO TO 6.

5. PERFORM DTC CONFIRMATION PROCEDURE

Perform DTC Confirmation Procedure for the displayed DTC*1 , and then make sure that DTC*1 is detected again.
At this time, always connect CONSULT-II to the vehicle, and check diagnostic results in real time on “DATA MONITOR (AUTO TRIG)”.

If two or more DTCs*1 are detected, refer to EC-869, "DTC Inspection Priority Chart" and determine trouble diagnosis order.

NOTE:

- Freeze frame data*2 is useful if the DTC*1 is not detected.
- Perform Overall Function Check if DTC Confirmation Procedure is not included on Service Manual. This simplified check procedure is an effective alternative though DTC*1 cannot be detected during this check.
  If the result of Overall Function Check is NG, it is the same as the detection of DTC*1 by DTC Confirmation Procedure.

Is DTC*1 detected?

Yes >> GO TO 10.
No >> Check according to EC-917, "TROUBLE DIAGNOSIS FOR INTERMITTENT INCIDENT" .

6. PERFORM BASIC INSPECTION

Perform EC-851, "Basic Inspection" .

With CONSULT-II>>GO TO 7.
Without CONSULT-II>>GO TO 9.

7. PERFORM DATA MONITOR (SPEC) MODE

With CONSULT-II
Make sure that “MAS A/F SE-B1”, “B/FUEL SCHDL”, and “A/F ALPHA-B1” are within the SP value using CONSULT-II “DATA MONITOR (SPEC)” mode. Refer to EC-907, "Inspection Procedure" .

Are they within the SP value?

Yes >> GO TO 9.
No >> GO TO 8.

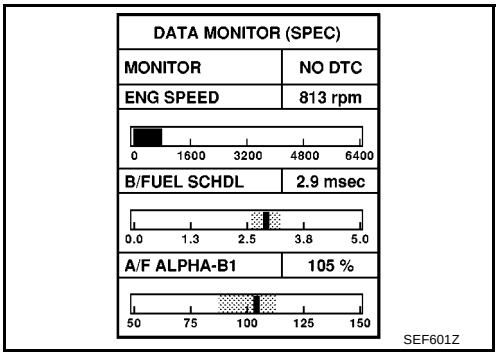

8. DETECT MALFUNCTIONING PART BY TROUBLE DIAGNOSIS - SPECIFICATION VALUE

Detect malfunctioning part according to EC-908, "Diagnostic Procedure" .

Is malfunctioning part detected?

Yes >> GO TO 11.
No >> GO TO 9.

9. DETECT MALFUNCTIONING SYSTEM BY SYMPTOM MATRIX CHART

Detect malfunctioning system according to EC-871, "Symptom Matrix Chart" based on the confirmed symptom in step 4, and determine the trouble diagnosis order based on possible causes and symptom.

>> GO TO 10.

10. DETECT MALFUNCTIONING PART BY DIAGNOSTIC PROCEDURE

Inspect according to Diagnostic Procedure of the system.

NOTE:
The Diagnostic Procedure in EC section described based on open circuit inspection. A short circuit inspection is also required for the circuit check in the Diagnostic Procedure. For details, refer to Circuit Inspection in GI-25, "How to Perform Efficient Diagnosis for an Electrical Incident" .

Is malfunctioning part detected?

Yes >> GO TO 11.
No >> Monitor input data from related sensors or check voltage of related ECM terminals using CONSULT-II. Refer to EC-883, "ECM Terminals and Reference Value" , EC-902, "CONSULT-II Reference Value in Data Monitor" .

11. REPAIR OR REPLACE THE MALFUNCTIONING PART

1. Repair or replace the malfunctioning part.
2. Reconnect parts or connectors disconnected during Diagnostic Procedure again after repair and replacement.
3. Check DTC. If DTC is displayed, erase it, refer to EC-841, "HOW TO ERASE EMISSION-RELATED DIAGNOSTIC INFORMATION" .

>> GO TO 12.

12. FINAL CHECK

When DTC was detected in step 2, perform DTC Confirmation Procedure or Overall Function Check again, and then make sure that the malfunction have been repaired securely.
When symptom was described from the customer, refer to confirmed symptom in step 3 or 4, and make sure that the symptom is not detected.

OK or NG

NG (DTC*1 is detected)>>GO TO 10.
NG (Symptom remains)>>GO TO 6.
OK >> 1. Before returning the vehicle to the customer, make sure to erase unnecessary DTC*1 in ECM and TCM (Transmission Control Module). (Refer to EC-841, "HOW TO ERASE EMISSION-RELATED DIAGNOSTIC INFORMATION" and AT-98, "OBD Diagnostic Trouble Code (DTC)" .)
2. If the completion of SRT is needed, drive vehicle under the specific driving pattern. Refer to EC-839, "Driving Pattern" .
3. **INSPECTION END**

*1: Include 1st trip DTC.
*2: Include 1st trip freeze frame data.

DIAGNOSTIC WORKSHEET

Description

There are many operating conditions that lead to the malfunction of engine components. A good grasp of such conditions can make troubleshooting faster and more accurate.
In general, each customer feels differently about a incident. It is important to fully understand the symptoms or conditions for a customer complaint.
Utilize a diagnostic worksheet like the one on the next page in order to organize all the information for troubleshooting.
Some conditions may cause the MI to come on steady or blink and DTC to be detected. Examples:

- Vehicle ran out of fuel, which caused the engine to misfire.

KEY POINTS

WHAT ..... Vehicle & engine model
WHEN ..... Date, Frequencies
WHERE..... Road conditions
HOW ..... Operating conditions, Weather conditions, Symptoms

SEF907L

Worksheet Sample

Customer name MR/MS		Model & Year	VIN
Engine #		Trans.	Mileage
Incident Date		Manuf. Date	In Service Date
Fuel and fuel filler cap		☐ Vehicle ran out of fuel causing misfire ☐ Fuel filler cap was left off or incorrectly screwed on.	
Symptoms	☐ Startability	☐ Impossible to start ☐ No combustion ☐ Partial combustion ☐ Partial combustion affected by throttle position ☐ Partial combustion NOT affected by throttle position ☐ Possible but hard to start ☐ Others [ ]	
	☐ Idling	☐ No fast idle ☐ Unstable ☐ High idle ☐ Low idle ☐ Others [ ]	
	☐ Driveability	☐ Stumble ☐ Surge ☐ Knock ☐ Lack of power ☐ Intake backfire ☐ Exhaust backfire ☐ Others [ ]	
	☐ Engine stall	☐ At the time of start ☐ While idling ☐ While accelerating ☐ While decelerating ☐ Just after stopping ☐ While loading	
Incident occurrence		☐ Just after delivery ☐ Recently ☐ In the morning ☐ At night ☐ In the daytime	
Frequency		☐ All the time ☐ Under certain conditions ☐ Sometimes	
Weather conditions		☐ Not affected	
	Weather	☐ Fine ☐ Raining ☐ Snowing ☐ Others [ ]	
	Temperature	☐ Hot ☐ Warm ☐ Cool ☐ Cold ☐ Humid °F	
Engine conditions		☐ Cold ☐ During warm-up ☐ After warm-up Engine speed 0 2,000 4,000 6,000 8,000 rpm	
Road conditions		☐ In town ☐ In suburbs ☐ Highway ☐ Off road (up/down)	
Driving conditions		☐ Not affected ☐ At starting ☐ While idling ☐ At racing ☐ While accelerating ☐ While cruising ☐ While decelerating ☐ While turning (RH/LH) Vehicle speed 0 10 20 30 40 50 60 MPH	
Malfunction indicator lamp		☐ Turned on ☐ Not turned on	

MTBL0017

DTC Inspection Priority Chart

BBS0049M

If some DTCs are displayed at the same time, perform inspections one by one based on the following priority chart.

NOTE:

- **If DTC U1000 or U1001 is displayed with other DTC, first perform the trouble diagnosis for DTC U1000, U1001. Refer to EC-925, "DTC U1000, U1001 CAN COMMUNICATION LINE" .**
- **If DTC U1010 is displayed with other DTC, first perform the trouble diagnosis for DTC U1010. Refer to EC-928, "DTC U1010 CAN COMMUNICATION" .**

Priority	Detected items (DTC)
1	● U1000 U1001 CAN communication line ● U1010 CAN communication ● P0102 P0103 Mass air flow sensor ● P0112 P0113 Intake air temperature sensor ● P0117 P0118 Engine coolant temperature sensor ● P0122 P0123 P0222 P0223 P1225 P1226 P2135 Throttle position sensor ● P0327 P0328 Knock sensor ● P0335 Crankshaft position sensor (POS) ● P0340 Camshaft position sensor (PHASE) ● P0500 Vehicle speed sensor ● P0605 ECM ● P0705 Park/Neutral position (PNP) switch ● P1229 Sensor power supply ● P1610 - P1615 NATS ● P1706 Park/Neutral position (PNP) switch ● P2122 P2123 P2127 P2128 P2138 Accelerator pedal position sensor
2	● P0132 P0133 P0134 P1143 P1144 Heated oxygen sensor 1 ● P0135 Heated oxygen sensor 1 heater ● P0138 P0139 P1146 P1147 Heated oxygen sensor 2 ● P0141 Heated oxygen sensor 2 heater ● P0444 EVAP canister purge volume control solenoid valve ● P0710 P0720 P0725 P0731 P0732 P0733 P0734 P0740 P0744 P0745 P0750 P0755 P1705 P1760 A/T related sensors, solenoid valves and switches ● P1065 ECM ● P1111 Intake valve timing control solenoid valve ● P1122 Electric throttle control function ● P1124 P1126 Throttle control motor relay ● P1128 Throttle control motor ● P1217 Engine over temperature (OVERHEAT) ● P1805 Brake switch
3	● P0011 Intake valve timing control ● P0171 P0172 Fuel injection system function ● P0300 - P0304 Misfire ● P0420 Three way catalyst function ● P1121 Electric throttle control actuator ● P1212 ESP communication line

Fail-Safe Chart

BBS0049N

When the DTC listed below is detected, the ECM enters fail-safe mode and the MI lights up.

DTC No.	Detected items	Engine operating condition in fail-safe mode	
P0102 P0103	Mass air flow sensor circuit	Engine speed will not rise more than 2,400 rpm due to the fuel cut.	
P0117 P0118	Engine coolant temperature sensor circuit	Engine coolant temperature will be determined by ECM based on the time after turning ignition switch ON or START. CONSULT-II displays the engine coolant temperature decided by ECM.	
		Condition	Engine coolant temperature decided (CONSULT-II display)
		Just as ignition switch is turned ON or START	40°C (104°F)
		More than approx. 4 minutes after ignition ON or START	80°C (176°F)
		Except as shown above	40 - 80°C (104 - 176°F) (Depends on the time)
		When the fail-safe system for engine coolant temperature sensor is activated, the cooling fan operates while engine is running.	
P0122 P0123 P0222 P0223 P2135	Throttle position sensor	The ECM controls the electric throttle control actuator in regulating the throttle opening in order for the idle position to be within +10 degrees. The ECM regulates the opening speed of the throttle valve to be slower than the normal condition. So, the acceleration will be poor.	
P1121	Electric throttle control actuator	(When electric throttle control actuator does not function properly due to the return spring malfunction:) ECM controls the electric throttle actuator by regulating the throttle opening around the idle position. The engine speed will not rise more than 2,000 rpm.	
		(When throttle valve opening angle in fail-safe mode is not in specified range:) ECM controls the electric throttle control actuator by regulating the throttle opening to 20 degrees or less.	
		(When ECM detects the throttle valve is stuck open:) While the vehicle is driving, it slows down gradually by fuel cut. After the vehicle stops, the engine stalls. The engine can restart in N or P (A/T), Neutral (M/T) position, and engine speed will not exceed 1,000 rpm or more.	
P1122	Electric throttle control function	ECM stops the electric throttle control actuator control, throttle valve is maintained at a fixed opening (approx. 5 degrees) by the return spring.	
P1124 P1126	Throttle control relay	ECM stops the electric throttle control actuator control, throttle valve is maintained at a fixed opening (approx. 5 degrees) by the return spring.	
P1128	Throttle control motor	ECM stops the electric throttle control actuator control, throttle valve is maintained at a fixed opening (approx. 5 degrees) by the return spring.	
P1229	Sensor power supply	ECM stops the electric throttle control actuator control, throttle valve is maintained at a fixed opening (approx. 5 degrees) by the return spring.	
P2122 P2123 P2127 P2128 P2138	Accelerator pedal position sensor	The ECM controls the electric throttle control actuator in regulating the throttle opening in order for the idle position to be within +10 degrees. The ECM regulates the opening speed of the throttle valve to be slower than the normal condition. So, the acceleration will be poor.	

- When there is an open circuit on MI circuit, the ECM cannot warn the driver by lighting up MI when there is malfunction on engine control system.
  Therefore, when electrical controlled throttle and part of ECM related diagnoses are continuously detected as NG for 5 trips, ECM warns the driver that engine control system malfunctions and MI circuit is open by means of operating fail-safe function.
  The fail-safe function also operates when above diagnoses except MI circuit are detected and demands the driver to repair the malfunction.

Engine operating condition in fail-safe mode	Engine speed will not rise more than 2,500 rpm due to the fuel cut

Symptom Matrix Chart
SYSTEM — BASIC ENGINE CONTROL SYSTEM

BBS0049O

		SYMPTOM													Reference page
		HARD/NO START/RESTART (EXCP. HA)	ENGINE STALL	HESITATION/SURGING/FLAT SPOT	SPARK KNOCK/DETONATION	LACK OF POWER/POOR ACCELERATION	HIGH IDLE/LOW IDLE	ROUGH IDLE/HUNTING	IDLING VIBRATION	SLOW/NO RETURN TO IDLE	OVERHEATS/WATER TEMPERATURE HIGH	EXCESSIVE FUEL CONSUMPTION	EXCESSIVE OIL CONSUMPTION	BATTERY DEAD (UNDER CHARGE)	
Warranty symptom code		AA	AB	AC	AD	AE	AF	AG	AH	AJ	AK	AL	AM	HA	
Fuel	Fuel pump circuit	1	1	2	3	2		2	2			3		2	EC-1215
	Fuel pressure regulator system	3	3	4	4	4	4	4	4	4		4			EC-860
	Fuel injector circuit	1	1	2	3	2		2	2			2			EC-1209
	Evaporative emission system	3	3	4	4	4	4	4	4	4		4			EC-823
Air	Positive crankcase ventilation system	3	3	4	4	4	4	4	4	4		4	1		EC-828
	Incorrect idle speed adjustment						1	1	1	1		1			EC-851
	Electric throttle control actuator	1	1	2	3	3	2	2	2	2		2		2	EC-1082, EC-1084
Ignition	Incorrect ignition timing adjustment	3	3	1	1	1		1	1			1			EC-851
	Ignition circuit	1	1	2	2	2		2	2			2			EC-1221
Main power supply and ground circuit		2	2	3	3	3		3	3		2	3			EC-918
Mass air flow sensor circuit		1	1	2	2	2		2	2			2			EC-935
Engine coolant temperature sensor circuit					3		3			3					EC-947
Heated oxygen sensor 1 circuit															EC-959, EC-967, EC-977, EC-1101, EC-1107
Throttle position sensor circuit							2			2					EC-953, EC-1026, EC-1146, EC-1148, EC-1191
Accelerator pedal position sensor circuit				3	2	1									EC-1150, EC-1172, EC-1181, EC-1197
Knock sensor circuit				2								3			EC-1038
Crankshaft position sensor (POS) circuit		2	2												EC-1042
Camshaft position sensor (PHASE) circuit		3	2												EC-1049
Vehicle speed signal circuit			2	3		3						3			EC-1070
ECM		2	2	3	3	3	3	3	3	3	3	3			EC-1072, EC-1075

	SYMPTOM													Reference page
	HARD/NO START/RESTART (EXCP. HA)	ENGINE STALL	HESITATION/SURGING/FLAT SPOT	SPARK KNOCK/DETONATION	LACK OF POWER/POOR ACCELERATION	HIGH IDLE/LOW IDLE	ROUGH IDLE/HUNTING	IDLING VIBRATION	SLOW/NO RETURN TO IDLE	OVERHEATS/WATER TEMPERATURE HIGH	EXCESSIVE FUEL CONSUMPTION	EXCESSIVE OIL CONSUMPTION	BATTERY DEAD (UNDER CHARGE)	
Warranty symptom code	AA	AB	AC	AD	AE	AF	AG	AH	AJ	AK	AL	AM	HA	
Intake valve timing control solenoid valve circuit		3	2		1	3	2	2	3		3			EC-1077
PNP switch circuit			3		3		3	3			3			EC-1158
Refrigerant pressure sensor circuit		2				3			3		4			EC-1231
Electrical load signal circuit							3							EC-1207
Air conditioner circuit	2	2	3	3	3	3	3	3	3		3		2	ATC-20, MTC-20
ABS actuator and electric unit (control unit)			4											BRC-8 or BRC-49

1 - 6: The numbers refer to the order of inspection.
(continued on next page)

SYSTEM — ENGINE MECHANICAL & OTHER

		SYMPTOM													Reference page
		HARD/NO START/RESTART (EXCP. HA)	ENGINE STALL	HESITATION/SURGING/FLAT SPOT	SPARK KNOCK/DETONATION	LACK OF POWER/POOR ACCELERATION	HIGH IDLE/LOW IDLE	ROUGH IDLE/HUNTING	IDLING VIBRATION	SLOW/NO RETURN TO IDLE	OVERHEATS/WATER TEMPERATURE HIGH	EXCESSIVE FUEL CONSUMPTION	EXCESSIVE OIL CONSUMPTION	BATTERY DEAD (UNDER CHARGE)	
Warranty symptom code		AA	AB	AC	AD	AE	AF	AG	AH	AJ	AK	AL	AM	HA	
Fuel	Fuel tank	5	5												FL-19
	Fuel piping			5	5	5		5	5			5			FL-14
	Vapor lock														—
	Valve deposit	5		5	5	5		5	5			5			—
	Poor fuel (Heavy weight gasoline, Low octane)														—

		SYMPTOM													Reference page
		HARD/NO START/RESTART (EXCP. HA)	ENGINE STALL	HESITATION/SURGING/FLAT SPOT	SPARK KNOCK/DETONATION	LACK OF POWER/POOR ACCELERATION	HIGH IDLE/LOW IDLE	ROUGH IDLE/HUNTING	IDLING VIBRATION	SLOW/NO RETURN TO IDLE	OVERHEATS/WATER TEMPERATURE HIGH	EXCESSIVE FUEL CONSUMPTION	EXCESSIVE OIL CONSUMPTION	BATTERY DEAD (UNDER CHARGE)	
Warranty symptom code		AA	AB	AC	AD	AE	AF	AG	AH	AJ	AK	AL	AM	HA	
Air	Air duct		5	5		5		5	5			5			EM-118
	Air cleaner														EM-118
	Air leakage from air duct (Mass air flow sensor — electric throttle control actuator)	5			5		5			5					EM-118
	Electric throttle control actuator														EM-120
	Air leakage from intake manifold/ Collector/Gasket														EM-120
Cranking	Battery	1	1	1		1		1	1			1		1	SC-5
	Generator circuit														SC-15
	Starter circuit	3													SC-45
	Signal plate	6													EM-189
	PNP switch	4													AT-105, MT-16 , MT-46
Engine	Cylinder head	5	5	5	5	5		5	5			5			EM-173
	Cylinder head gasket										4		3		
	Cylinder block	6	6	6	6	6		6	6			6	4		EM-189
	Piston														
	Piston ring														
	Connecting rod														
	Bearing														
	Crankshaft														
Valve mecha-nism	Timing chain	5	5	5	5	5		5	5			5			EM-142
	Camshaft														EM-151
	Intake valve timing control														EM-142
	Intake valve												3		EM-173
	Exhaust valve														
Exhaust	Exhaust manifold/Tube/Muffler/ Gasket	5	5	5	5	5		5	5			5			EM-124, EX-3
	Three way catalyst														
Lubrica-tion	Oil pan/Oil strainer/Oil pump/Oil filter/Oil gallery	5	5	5	5	5		5	5			5			EM-127, LU-19
	Oil level (Low)/Filthy oil														LU-16

		SYMPTOM													Reference page
		HARD/NO START/RESTART (EXCP. HA)	ENGINE STALL	HESITATION/SURGING/FLAT SPOT	SPARK KNOCK/DETONATION	LACK OF POWER/POOR ACCELERATION	HIGH IDLE/LOW IDLE	ROUGH IDLE/HUNTING	IDLING VIBRATION	SLOW/NO RETURN TO IDLE	OVERHEATS/WATER TEMPERATURE HIGH	EXCESSIVE FUEL CONSUMPTION	EXCESSIVE OIL CONSUMPTION	BATTERY DEAD (UNDER CHARGE)	
Warranty symptom code		AA	AB	AC	AD	AE	AF	AG	AH	AJ	AK	AL	AM	HA	
Cooling	Radiator/Hose/Radiator filler cap	5	5	5	5	5		5	5		4	5			CO-31
	Thermostat									5					CO-38
	Water pump														CO-36
	Water gallery														CO-26
	Cooling fan									5					CO-33
	Coolant level (Low)/Contaminated coolant														CO-27
NATS (Nissan Anti-Theft System)		1	1												BL-215

1 - 6: The numbers refer to the order of inspection.

Engine Control Component Parts Location

BBS0049P

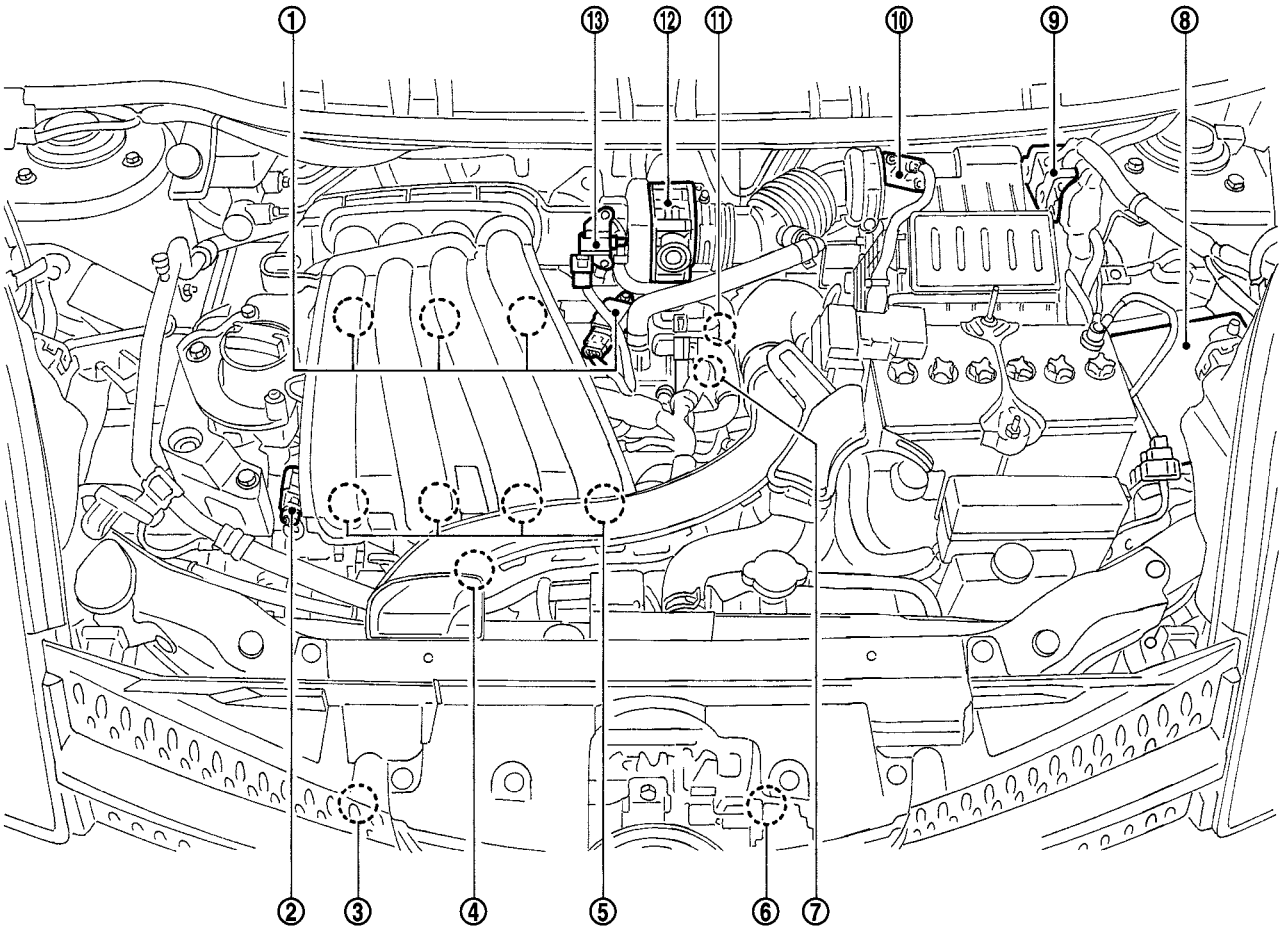

MBIB1542E

1. Ignition coil (with power transistor) and spark plug
2. Intake valve timing control solenoid valve
3. Refrigerant pressure sensor
4. Knock sensor
5. Fuel injector
6. Cooling fan motor
7. Camshaft position sensor (PHASE)
8. IPDM E/R
9. ECM
10. Mass air flow sensor (with intake air temperature sensor)
11. Engine coolant temperature sensor
12. Electric throttle control actuator (with built-in throttle position sensor, throttle control motor)
13. EVAP canister purge volume control solenoid valve

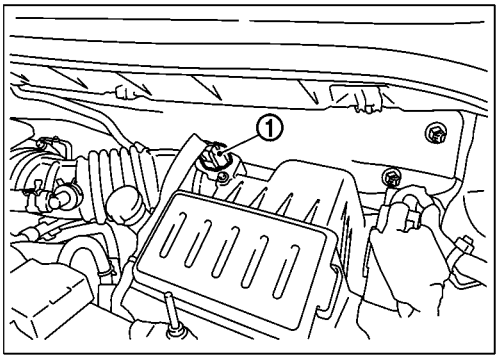

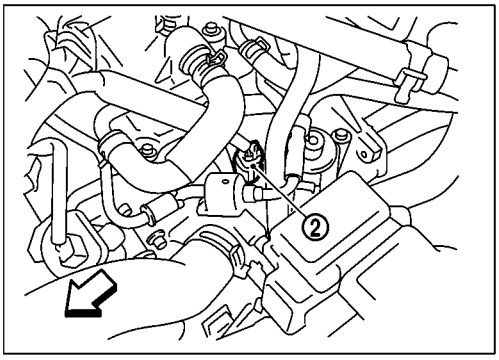

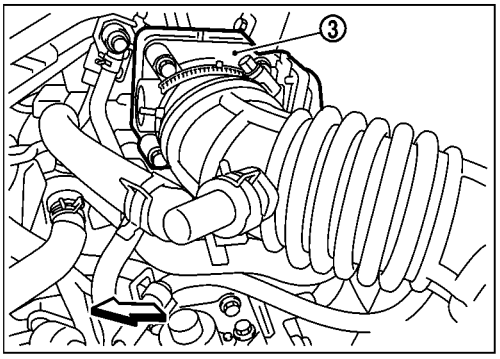

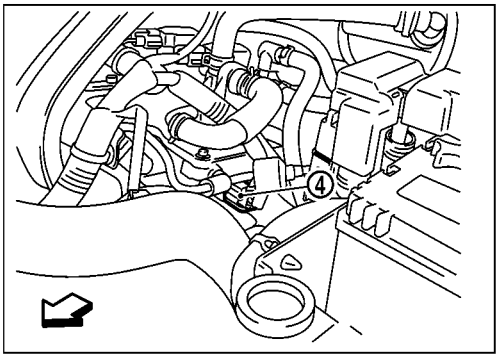

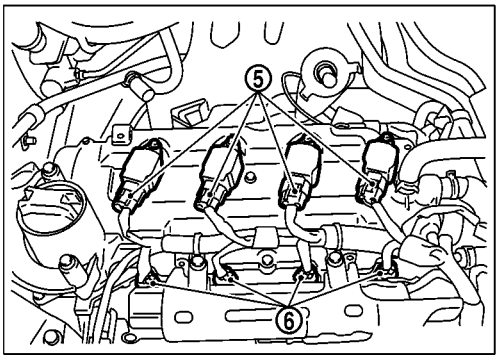

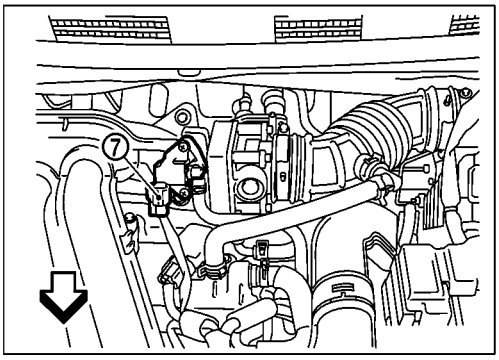

PBIB2940E

⇦ : Vehicle front

1. Mass air flow sensor (with intake air temperature sensor)
2. Engine coolant temperature sensor
3. Electric throttle control actuator
4. Camshaft position sensor (PHASE)
5. Ignition coil (with power transistor)
6. Fuel injector
7. EVAP canister purge volume control solenoid valve

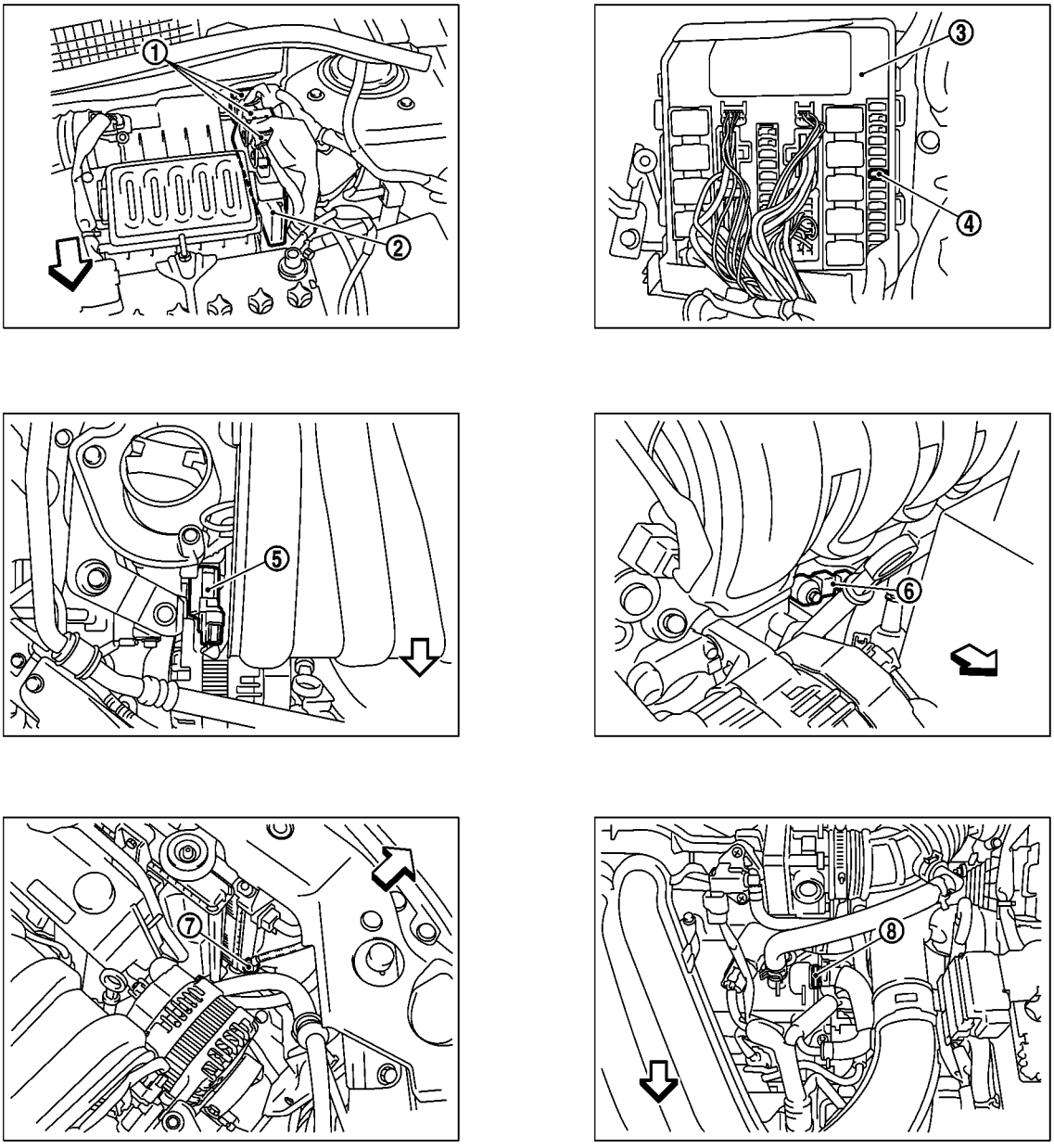

MBIB1543E

⇦ : Vehicle front

1. ECM harness connectors
2. ECM
3. IPDM E/R
4. Fuel pump fuse (15A)
5. Intake valve timing control solenoid valve
6. Knock sensor
7. Refrigerant pressure sensor
8. PCV valve

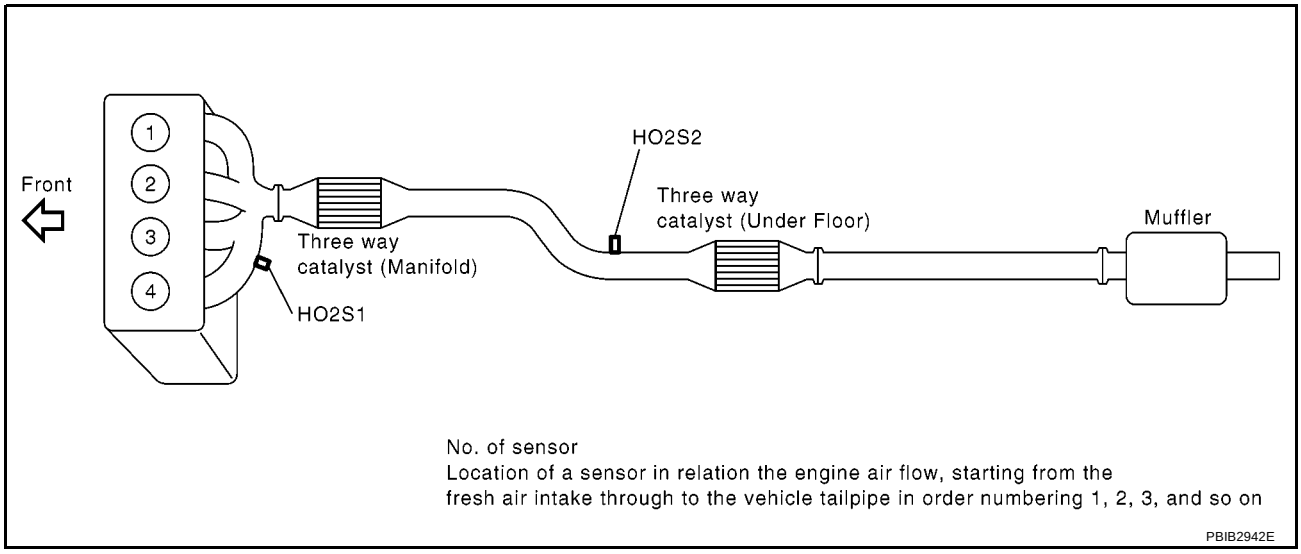

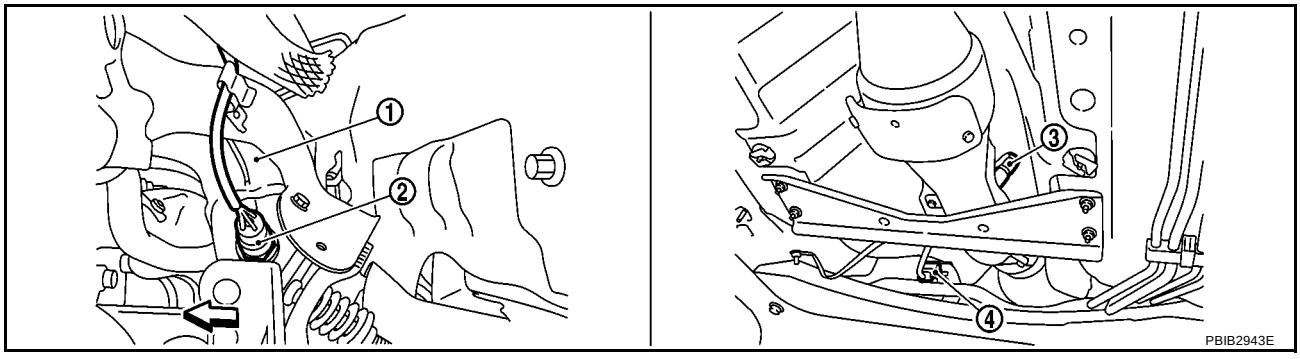

⇦ : Vehicle front

1. Exhaust manifold
2. Heated oxygen sensor 1
3. Heated oxygen sensor 2
4. Heated oxygen sensor 2 harness connector

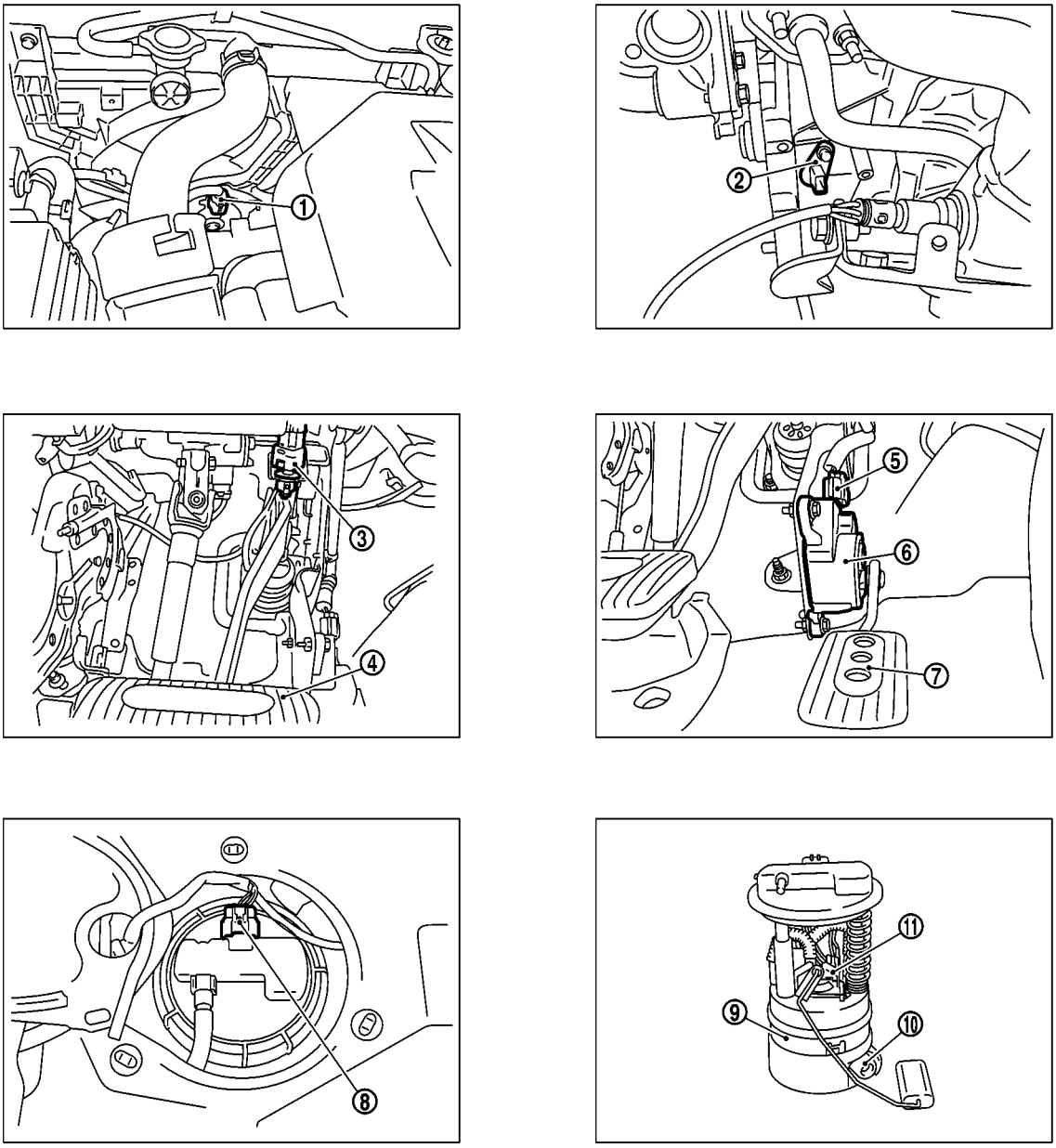

MBIB1544E

1. Cooling fan motor
2. Crankshaft position sensor (POS)
3. Stop lamp switch
4. Brake pedal
5. Accelerator pedal position sensor harness connector
6. Accelerator pedal position sensor
7. Accelerator pedal
8. Fuel level sensor unit and fuel pump harness connector
9. Fuel pump and fuel filter
10. Fuel pressure regulator
11. Fuel level sensor unit

Vacuum Hose Drawing

BBS0049Q

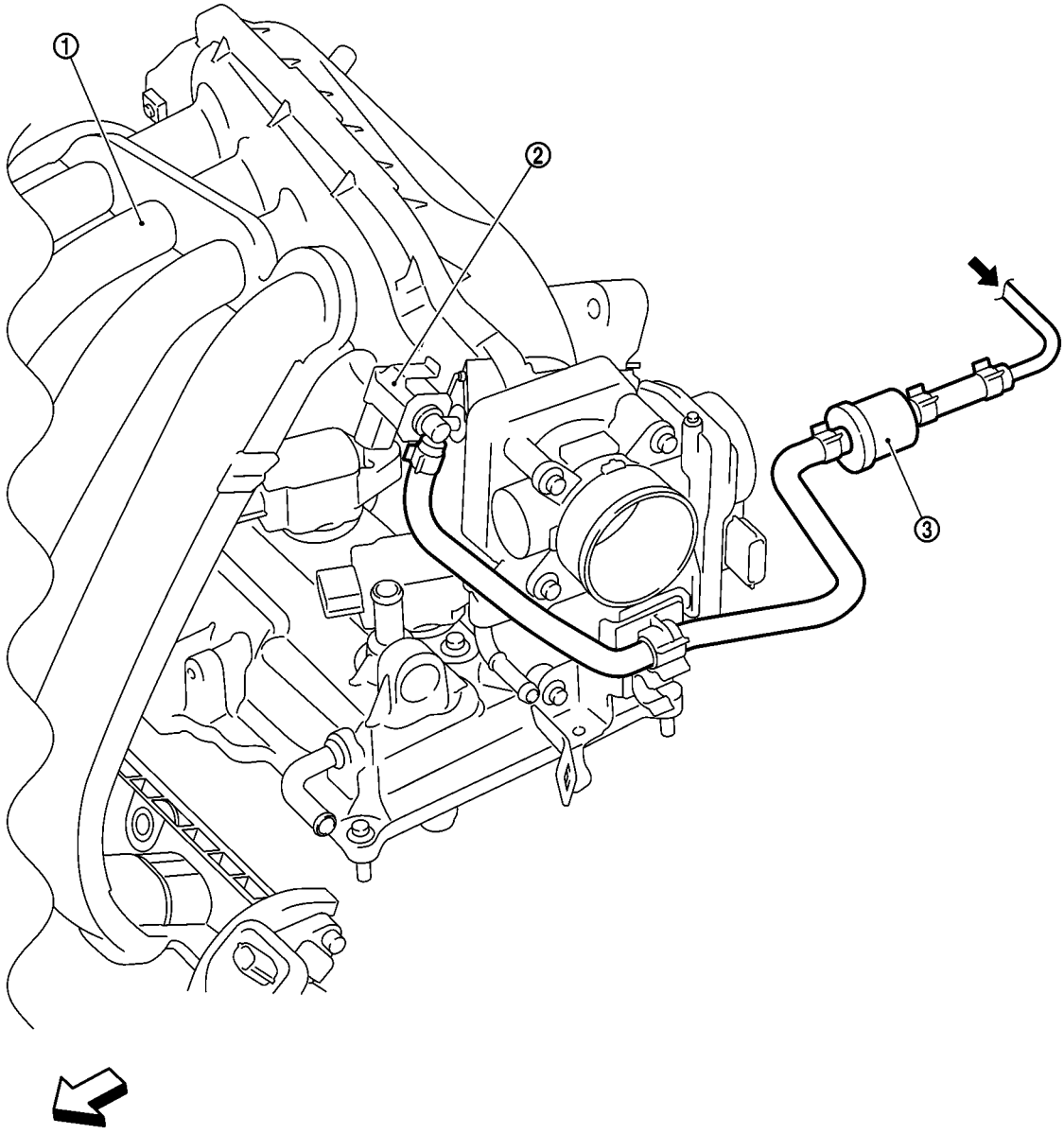

PBIB2946E

⇦ : Vehicle front

⬅ : To EVAP canister

1. Intake manifold
2. EVAP canister purge volume control solenoid valve
3. EVAP purge resonator

NOTE:
Do not use soapy water or any type of solvent while installing vacuum hoses or purge hoses.

Refer to EC-816, "System Diagram" for Vacuum Control System.

Circuit Diagram

BBS0049R

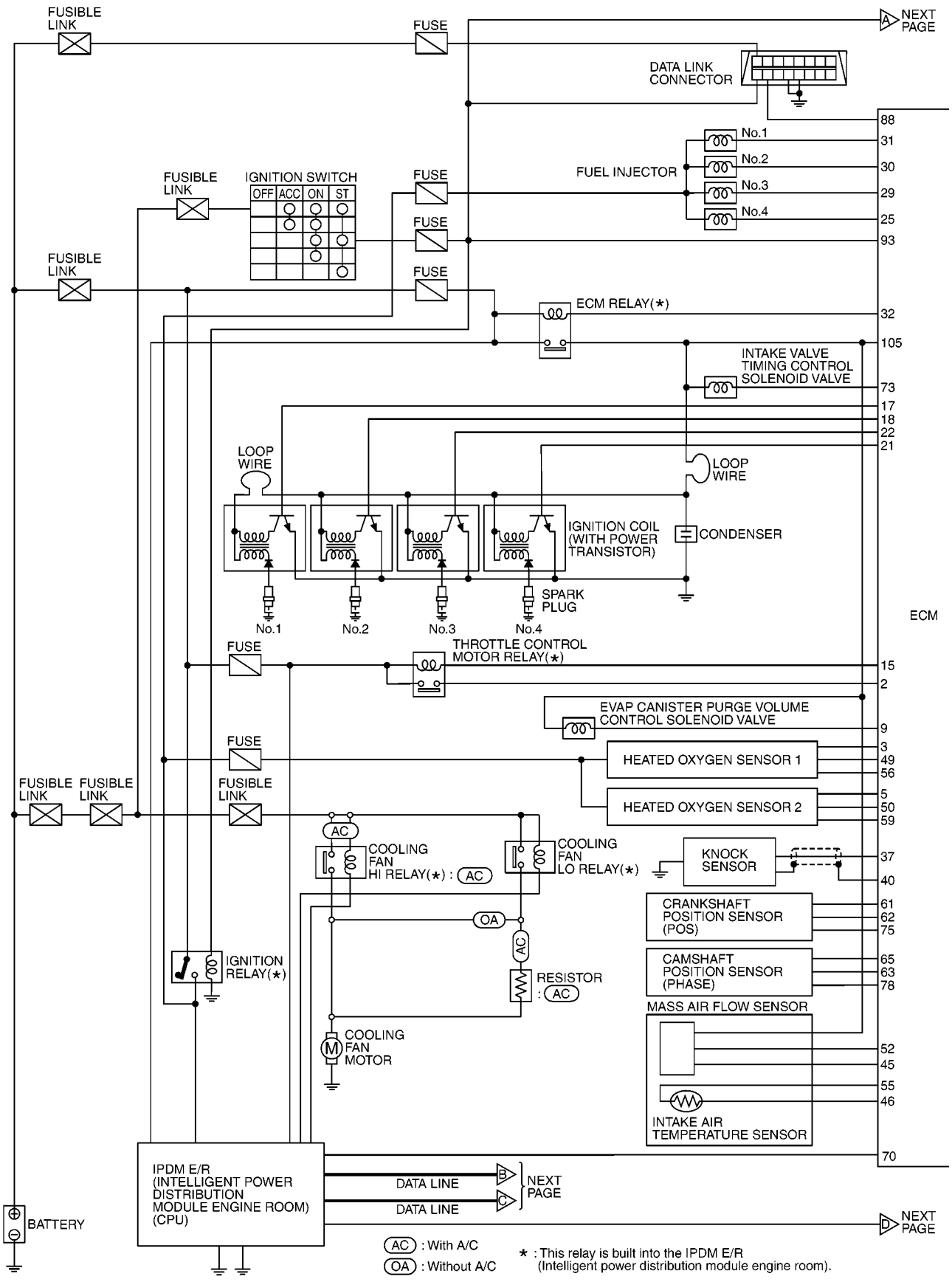

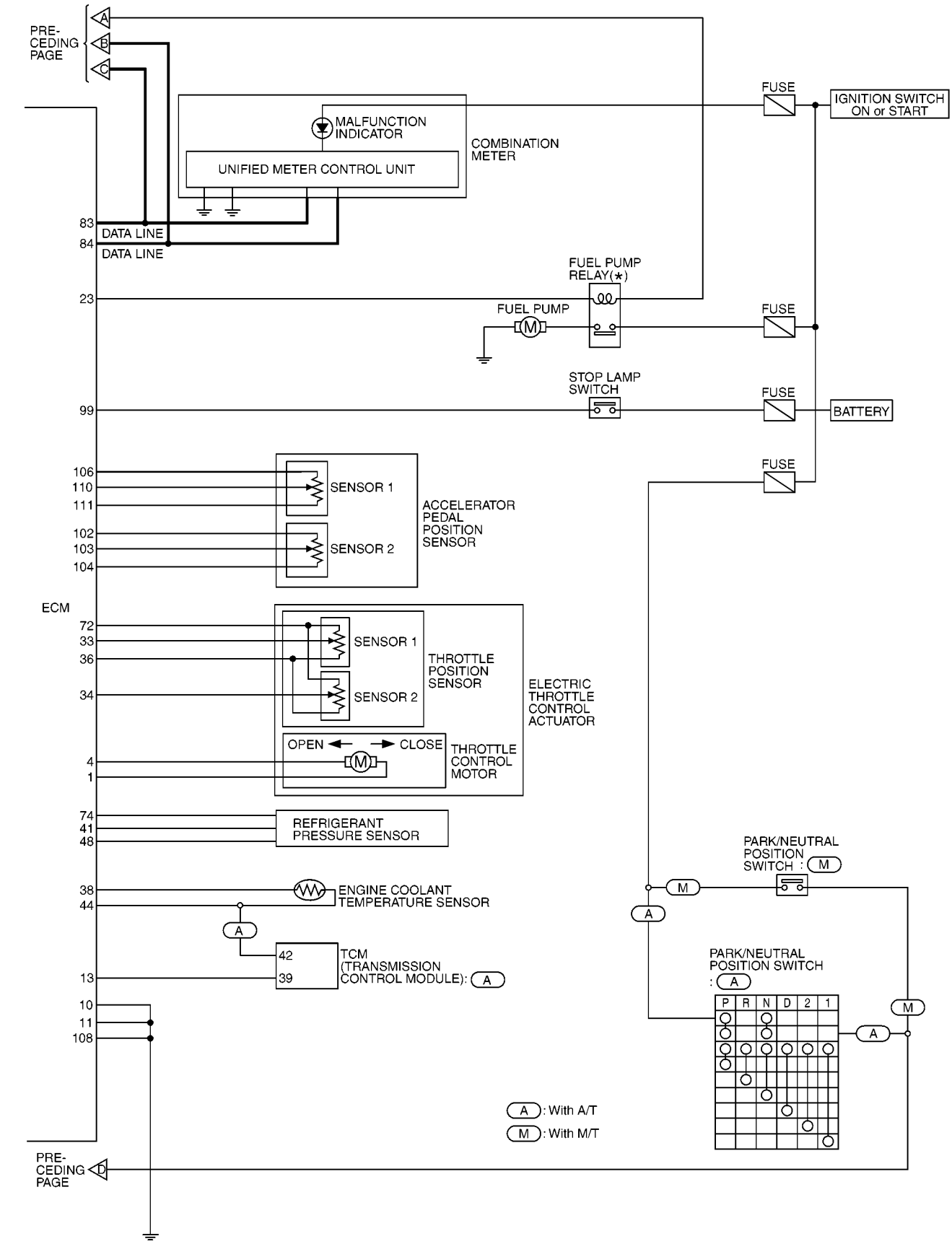
PRE-CEDING PAGE
A
B
C
MALFUNCTION INDICATOR
UNIFIED METER CONTROL UNIT
COMBINATION METER
FUSE
IGNITION SWITCH ON or START
83
84
DATA LINE
DATA LINE
FUEL PUMP RELAY(*)
23
FUEL PUMP
M
FUSE
STOP LAMP SWITCH
99
FUSE
BATTERY
FUSE
106
110
111
SENSOR 1
102
103
104
SENSOR 2
ACCELERATOR PEDAL POSITION SENSOR
ECM
72
33
36
34
SENSOR 1
SENSOR 2
THROTTLE POSITION SENSOR
ELECTRIC THROTTLE CONTROL ACTUATOR
OPEN
CLOSE
4
1
THROTTLE CONTROL MOTOR
74
41
48
REFRIGERANT PRESSURE SENSOR
PARK/NEUTRAL POSITION SWITCH : M
38
44
ENGINE COOLANT TEMPERATURE SENSOR
A
42
39
13
TCM (TRANSMISSION CONTROL MODULE): A
PARK/NEUTRAL POSITION SWITCH : A
P R N D 2 1
10
11
108
A : With A/T
M : With M/T
PRE-CEDING PAGE
D
MBWA1454E

ECM Harness Connector Terminal Layout

BBS0049S

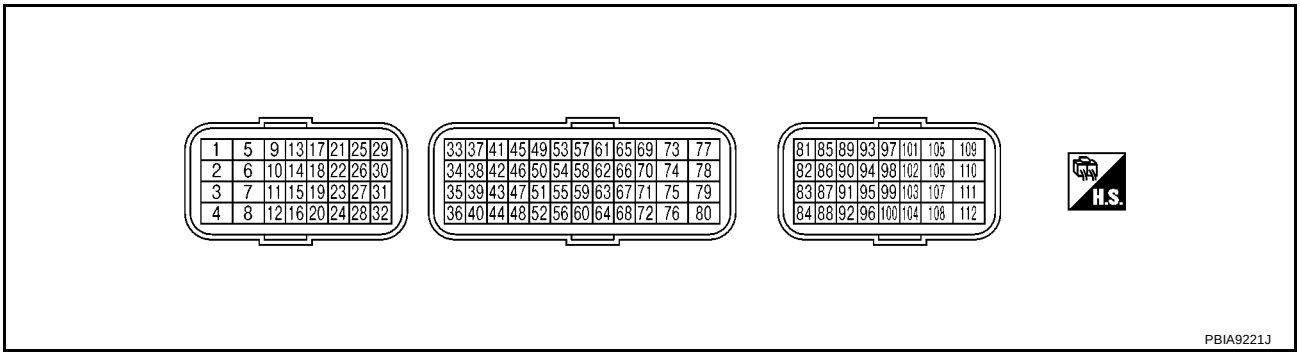

ECM Terminals and Reference Value

BBS0049T

PREPARATION

1. ECM (1) is located in the engine room left side near battery.
   - ⇦: Vehicle front

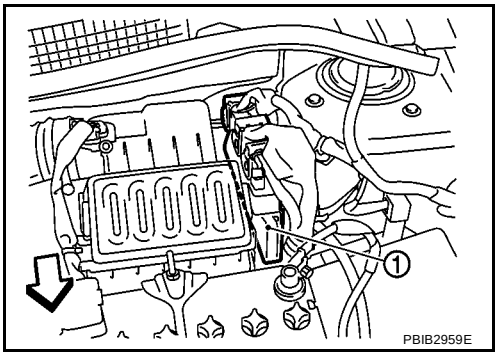

2. Disconnect ECM harness connector.
   - When disconnecting ECM harness connector, loosen (A) it with levers (1) as far as they will go as shown in the figure.
   - ECM (2)
   - Fasten (B)
3. Connect a break-out box (SST) and Y-cable adapter (SST) between the ECM and ECM harness connector.
   - Use extreme care not to touch 2 pins at one time.
   - Data is for comparison and may not be exact.

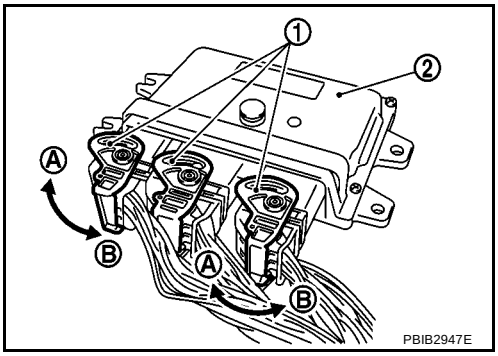

ECM INSPECTION TABLE

Specification data are reference values and are measured between each terminal and ground.
Pulse signal is measured by CONSULT-II.

CAUTION:

Do not use ECM ground terminals when measuring input/output voltage. Doing so may result in damage to the ECMs transistor. Use a ground other than ECM terminals, such as the ground.

TERMINAL NO.	WIRE COLOR	ITEM	CONDITION	DATA (DC Voltage)
1	P	Throttle control motor (Open)	**[Ignition switch: ON]** ● Engine stopped ● Shift lever: D (A/T), 1st (M/T) ● Accelerator pedal: Fully depressed	Approximately 3.2V★ 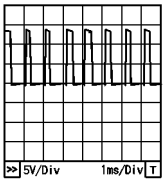 PBIA8150J
2	LG	Throttle control motor power supply	**[Ignition switch: ON]**	BATTERY VOLTAGE (11 - 14V)

TERMINAL NO.	WIRE COLOR	ITEM	CONDITION	DATA (DC Voltage)
3	Y	Heated oxygen sensor 1 heater	**[Engine is running]** ● **Warm-up condition** ● Engine speed: Below 3,600 rpm	Approximately 10V★ 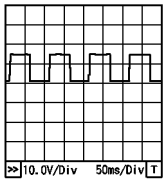 PBIA8148J
			[Ignition switch: ON] ● Engine stopped **[Engine is running]** ● Engine speed: Above 3,600 rpm	BATTERY VOLTAGE (11 - 14V)
4	L	Throttle control motor (Close)	**[Ignition switch: ON]** ● Engine stopped ● Shift lever: D (A/T), 1st (M/T) ● Accelerator pedal: Fully released	Approximately 1.8V★ 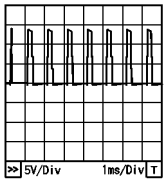 PBIA8149J
5	GR	Heated oxygen sensor 2 heater	**[Engine is running]** ● Engine speed: Below 3,600 rpm after the following conditions are met. – Engine: After warming up – Keeping the engine speed between 3,500 and 4,000 rpm for 1 minute and at idle for 1 minute under no load.	Approximately 10V★ 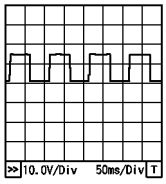 PBIA8148J
			[Ignition switch: ON] ● Engine stopped **[Engine is running]** ● Engine speed: Above 3,600 rpm	BATTERY VOLTAGE (11 - 14V)
9	LG	EVAP canister purge volume control solenoid valve	**[Engine is running]** ● Idle speed	BATTERY VOLTAGE (11 - 14V)★ 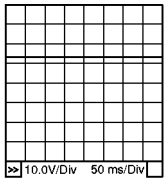 PBIB0050E
			[Engine is running] ● Engine speed: About 2,000 rpm (More than 100 seconds after starting engine)	Approximately 10V★ 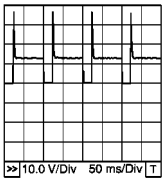 PBIB0520E
10 11	B B/W	ECM ground	**[Engine is running]** ● Idle speed	Body ground

TERMINAL NO.	WIRE COLOR	ITEM	CONDITION	DATA (DC Voltage)
13	L	Tachometer signal	**[Engine is running]** ● **Warm-up condition** ● Idle speed **NOTE:** The pulse cycle changes depending on rpm at idle.	3 - 5V★ 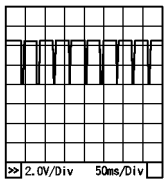 PBIA8164J
			[Engine is running] ● **Warm-up condition** ● Engine speed: 2,000 rpm	3 - 5V★ 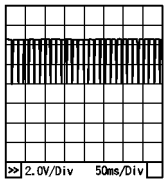 PBIA8165J
15	G	Throttle control motor relay	**[Ignition switch: OFF]**	BATTERY VOLTAGE (11 - 14V)
			[Ignition switch: ON]	0 - 1.0V
17 18 21 22	V BR G Y	Ignition signal No. 1 Ignition signal No. 2 Ignition signal No. 4 Ignition signal No. 3	**[Engine is running]** ● **Warm-up condition** ● Idle speed **NOTE:** The pulse cycle changes depending on rpm at idle.	0 - 0.3V★ 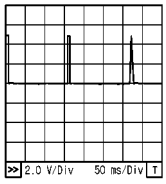 PBIA9265J
			[Engine is running] ● **Warm-up condition** ● Engine speed: 2,500 rpm	0.2 - 0.5V★ 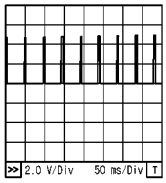 PBIA9266J
23	R	Fuel pump relay	**[Ignition switch: ON]** ● For 1 second after turning ignition switch ON **[Engine is running]**	0 - 1.0V
			[Ignition switch: ON] ● More than 1 second after turning ignition switch ON	BATTERY VOLTAGE (11 - 14V)

TERMINAL NO.	WIRE COLOR	ITEM	CONDITION	DATA (DC Voltage)
25 29 30 31	R O GR L	Fuel injector No. 4 Fuel injector No. 3 Fuel injector No. 2 Fuel injector No. 1	**[Engine is running]** ● **Warm-up condition** ● Idle speed **NOTE:** The pulse cycle changes depending on rpm at idle.	BATTERY VOLTAGE (11 - 14V)★ 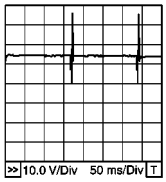 PBIB0529E
			[Engine is running] ● **Warm-up condition** ● Engine speed: 2,000 rpm	BATTERY VOLTAGE (11 - 14V)★ 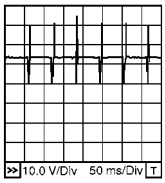 PBIA4943J
32	P	ECM relay (Self shut-off)	**[Engine is running]** **[Ignition switch: OFF]** ● For a few seconds after turning ignition switch OFF	0 - 1.0V
			[Ignition switch: OFF] ● More than a few seconds after turning ignition switch OFF	BATTERY VOLTAGE (11 - 14V)
33	Y	Throttle position sensor 1	**[Ignition switch: ON]** ● Engine stopped ● Shift lever: D (A/T), 1st (M/T) ● Accelerator pedal: Fully released	More than 0.36V
			[Ignition switch: ON] ● Engine stopped ● Shift lever: D (A/T), 1st (M/T) ● Accelerator pedal: Fully depressed	Less than 4.75V
34	R	Throttle position sensor 2	**[Ignition switch: ON]** ● Engine stopped ● Shift lever: D (A/T), 1st (M/T) ● Accelerator pedal: Fully released	Less than 4.75V
			[Ignition switch: ON] ● Engine stopped ● Shift lever: D (A/T), 1st (M/T) ● Accelerator pedal: Fully depressed	More than 0.36V
36	BR	Sensor ground (Throttle position sensor)	**[Engine is running]** ● **Warm-up condition** ● Idle speed	Approximately 0V
37	W	Knock sensor	**[Engine is running]** ● Idle speed	Approximately 2.5V
38	P	Engine coolant temperature sensor	**[Engine is running]**	Approximately 0 - 4.8V Output voltage varies with engine coolant temperature.

TERMINAL NO.	WIRE COLOR	ITEM	CONDITION	DATA (DC Voltage)
40	—	Sensor ground (Knock sensor)	**[Engine is running]** ● **Warm-up condition** ● Idle speed	Approximately 0V
41	BR	Refrigerant pressure sensor	**[Engine is running]** ● **Warm-up condition** ● Both A/C switch and blower fan switch: ON (Compressor operates.)	1.0 - 4.0V
44	B	Sensor ground (Engine coolant temperature sensor)	**[Engine is running]** ● **Warm-up condition** ● Idle speed	Approximately 0V
45	G	Mass air flow sensor	**[Ignition switch: ON]** ● Engine stopped	Approximately 0.4V
			[Engine is running] ● **Warm-up condition** ● Idle speed	1.0 - 1.3V
			[Engine is running] ● **Warm-up condition** ● Engine is revving from idle to about 4,000 rpm	1.0 - 1.3 to Approximately 2.4V (Check for linear voltage rise in response to engine being increased to about 4,000 rpm.)
46	V	Intake air temperature sensor	**[Engine is running]**	Approximately 0 - 4.8V Output voltage varies with intake air temperature.
48	Y	Sensor ground (Refrigerant pressure sensor)	**[Engine is running]** ● **Warm-up condition** ● Idle speed	Approximately 0V
49	BR	Heated oxygen sensor 1	**[Engine is running]** ● **Warm-up condition** ● Engine speed: 2,000 rpm	0 - Approximately 1.0V (Periodically change)
50	B	Heated oxygen sensor 2	**[Engine is running]** ● Revving engine from idle to 3,000 rpm quickly after the following conditions are met. – Engine: After warming up – Keeping the engine speed between 3,500 and 4,000 rpm for 1 minute and at idle for 1 minute under no load.	0 - Approximately 1.0V
52	LG	Sensor ground (Mass air flow sensor)	**[Engine is running]** ● **Warm-up condition** ● Idle speed	Approximately 0V
55	O	Sensor ground (Intake air temperature sensor)	**[Engine is running]** ● **Warm-up condition** ● Idle speed	Approximately 0V
56	R	Sensor ground (Heated oxygen sensor 1)	**[Engine is running]** ● **Warm-up condition** ● Idle speed	Approximately 0V
59	LG	Sensor ground (Heated oxygen sensor 2)	**[Engine is running]** ● **Warm-up condition** ● Idle speed	Approximately 0V

TERMINAL NO.	WIRE COLOR	ITEM	CONDITION	DATA (DC Voltage)
61	Y	Crankshaft position sensor (POS)	**[Engine is running]** ● **Warm-up condition** ● Idle speed **NOTE:** The pulse cycle changes depending on rpm at idle.	0 - 1.0V★ 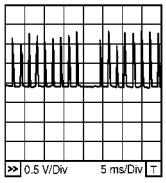 MBIB1453E
			[Engine is running] ● Engine speed: 2,000 rpm	0 - 1.0V★ 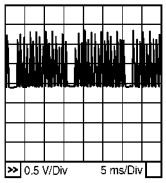 MBIB1454E
62	W	Sensor ground [Crankshaft position sensor (POS)]	**[Engine is running]** ● **Warm-up condition** ● Idle speed	Approximately 0V
63	B	Sensor ground [Camshaft position sensor (PHASE)]	**[Engine is running]** ● **Warm-up condition** ● Idle speed	Approximately 0V
65	R	Camshaft position sensor (PHASE)	**[Engine is running]** ● **Warm-up condition** ● Idle speed **NOTE:** The pulse cycle changes depending on rpm at idle.	0 - 1.0V★ 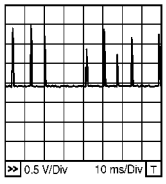 MBIB1455E
			[Engine is running] ● Engine speed: 2,000 rpm	0 - 1.0V★ 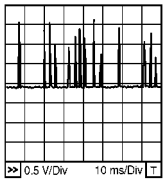 MBIB1456E
70	GR	Park/Neutral position (PNP) switch	**[Ignition switch: ON]** ● Shift lever: P or N (A/T models) ● Shift lever: Neutral (M/T models)	Approximately 0V
			[Ignition switch: ON] ● Except above position	BATTERY VOLTAGE (11 - 14V)
72	L	Sensor power supply (Throttle position sensor)	**[Ignition switch: ON]**	Approximately 5V

TERMINAL NO.	WIRE COLOR	ITEM	CONDITION	DATA (DC Voltage)
73	LG	Intake valve timing control solenoid valve	**[Engine is running]** ● **Warm-up condition** ● Idle speed	BATTERY VOLTAGE (11 - 14V)
			[Engine is running] ● **Warm-up condition** ● Engine speed: 2,000 rpm	7 - 10V★ 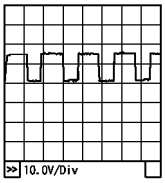 PBIA4937J
74	W	Sensor power supply (Refrigerant pressure sensor)	**[Ignition switch: ON]**	Approximately 5V
75	G	Sensor power supply [Crankshaft position sensor (POS)]	**[Ignition switch: ON]**	Approximately 5V
78	O	Sensor power supply [Camshaft position sensor (PHASE)]	**[Ignition switch: ON]**	Approximately 5V
83	Y	CAN communication line	**[Ignition switch: ON]**	Approximately 1.7 - 2.3V
84	L	CAN communication line	**[Ignition switch: ON]**	Approximately 2.6 - 3.2V
88	LG	DATA link connector	**[Ignition switch: ON]** ● CONSULT-II or GST: Disconnected.	Approximately 2.7V
93	O	Ignition switch	**[Ignition switch: OFF]**	0V
			[Ignition switch: ON]	BATTERY VOLTAGE (11 - 14V)
99	R	Stop lamp switch	**[Ignition switch: OFF]** ● Brake pedal: Fully released	Approximately 0V
			[Ignition switch: OFF] ● Brake pedal: Slightly depressed	BATTERY VOLTAGE (11 - 14V)
102	BR	Sensor power supply (Accelerator pedal position sensor 2)	**[Ignition switch: ON]**	Approximately 5V
103	G	Accelerator pedal position sensor 2	**[Ignition switch: ON]** ● Engine stopped ● Accelerator pedal: Fully released	0.3 - 0.6V
			[Ignition switch: ON] ● Engine stopped ● Accelerator pedal: Fully depressed	1.95 - 2.4V
104	B	Sensor ground (Accelerator pedal position sensor 2)	**[Engine is running]** ● **Warm-up condition** ● Idle speed	Approximately 0V
105	G	Power supply for ECM	**[Ignition switch: ON]**	BATTERY VOLTAGE (11 - 14V)
106	O	Sensor power supply (Accelerator pedal position sensor 1)	**[Ignition switch: ON]**	Approximately 5V
108	B	ECM ground	**[Engine is running]** ● Idle speed	Body ground

TERMI-NAL NO.	WIRE COLOR	ITEM	CONDITION	DATA (DC Voltage)
110	W	Accelerator pedal position sensor 1	**[Ignition switch: ON]** ● Engine stopped ● Accelerator pedal: Fully released	0.6 - 0.9V
			[Ignition switch: ON] ● Engine stopped ● Accelerator pedal: Fully depressed	3.9 - 4.7V
111	B	Sensor ground (Accelerator pedal position sensor 1)	**[Engine is running]** ● **Warm-up condition** ● Idle speed	Approximately 0V

★: Average voltage for pulse signal (Actual pulse signal can be confirmed by oscilloscope.)

CONSULT-II Function (ENGINE)

BBS0049U

FUNCTION

Diagnostic test mode	Function
Work support	This mode enables a technician to adjust some devices faster and more accurately by following the indications on the CONSULT-II unit.
Self-diagnostic results	Self-diagnostic results such as 1st trip DTC, DTCs and 1st trip freeze frame data or freeze frame data can be read and erased quickly.*
Data monitor	Input/Output data in the ECM can be read.
Data monitor (SPEC)	Input/Output of the specification for Basic fuel schedule, AFM, A/F feedback control value and the other data monitor items can be read.
CAN diagnostic support monitor	The results of transmit/receive diagnosis of CAN communication can be read.
Active test	Diagnostic Test Mode in which CONSULT-II drives some actuators apart from the ECMs and also shifts some parameters in a specified range.
Function test	This mode is used to inform customers when their vehicle condition requires periodic maintenance.
DTC & SRT confirmation	The status of system monitoring tests and the self-diagnosis status/result can be confirmed.
ECM part number	ECM part number can be read.

*: The following emission-related diagnostic information is cleared when the ECM memory is erased.

- Diagnostic trouble codes
- 1st trip diagnostic trouble codes
- Freeze frame data
- 1st trip freeze frame data
- System readiness test (SRT) codes
- Test values

ENGINE CONTROL COMPONENT PARTS/CONTROL SYSTEMS APPLICATION

Item			DIAGNOSTIC TEST MODE							
			WORK SUPPORT	SELF-DIAGNOSTIC RESULTS		DATA MONITOR	DATA MONITOR (SPEC)	ACTIVE TEST	DTC & SRT CONFIRMATION	
				DTC*1	FREEZE FRAME DATA*2				SRT STATUS	DTC WORK SUPPORT
ENGINE CONTROL COMPONENT PARTS	INPUT	Crankshaft position sensor (POS)		×	×	×	×			
		Camshaft position sensor (PHASE)		×	×	×	×			
		Mass air flow sensor		×		×	×			
		Engine coolant temperature sensor		×	×	×	×	×		
		Heated oxygen sensor 1		×		×	×		×	×
		Heated oxygen sensor 2		×		×	×		×	×
		Wheel sensor		×	×	×	×			
		Accelerator pedal position sensor		×		×	×			
		Throttle position sensor		×		×	×			
		Intake air temperature sensor		×	×	×	×			
		Knock sensor		×						
		EPS control unit				×	×			
		Refrigerant pressure sensor				×	×			
		Closed throttle position switch (accelerator pedal position sensor signal)				×	×			
		Air conditioner switch				×	×			
		Park/neutral position (PNP) switch		×		×	×			
		Stop lamp switch		×		×	×			
		Battery voltage				×	×			
		Load signal				×	×			
ENGINE CONTROL COMPONENT PARTS	OUTPUT	Fuel injector				×	×	×		
		Power transistor (Ignition timing)				×	×	×		
		Throttle control motor relay		×		×	×			
		Throttle control motor		×						
		EVAP canister purge volume control solenoid valve		×		×	×	×		×
		Air conditioner relay				×	×			
		Fuel pump relay	×			×	×	×		
		Cooling fan relay		×		×	×	×		
		Heated oxygen sensor 1 heater		×		×	×		×	
		Heated oxygen sensor 2 heater		×		×	×		×	
		Intake valve timing control solenoid valve		×		×	×	×		
		Calculated load value			×	×	×			

X: Applicable
*1: This item includes 1st trip DTCs.
*2: This mode includes 1st trip freeze frame data or freeze frame data. The items appear on CONSULT-II screen in freeze frame data mode only if a 1st trip DTC or DTC is detected. For details, refer to EC-834, "FREEZE FRAME DATA AND 1ST TRIP FREEZE FRAME DATA" .

INSPECTION PROCEDURE

Refer to GI-36, "CONSULT-II Start Procedure" .

WORK SUPPORT MODE

Work Item

WORK ITEM	CONDITION	USAGE
FUEL PRESSURE RELEASE	● FUEL PUMP WILL STOP BY TOUCHING “START” DURING IDLING. CRANK A FEW TIMES AFTER ENGINE STALLS.	When releasing fuel pressure from fuel line
IDLE AIR VOL LEARN	● THE IDLE AIR VOLUME THAT KEEPS THE ENGINE WITHIN THE SPECIFIED RANGE IS MEMORIZED IN ECM.	When learning the idle air volume
SELF-LEARNING CONT	● THE COEFFICIENT OF SELF-LEARNING CONTROL MIXTURE RATIO RETURNS TO THE ORIGINAL COEFFICIENT.	When clearing the coefficient of self-learning control value
TARGET IDLE RPM ADJ*	● IDLE CONDITION	When setting target idle speed
TARGET IGN TIM ADJ*	● IDLE CONDITION	When adjusting target ignition timing

*: This function is not necessary in the usual service procedure.

SELF-DIAG RESULTS MODE

Self Diagnostic Item

Regarding items of DTC and 1st trip DTC, refer to EC-831, "EMISSION-RELATED DIAGNOSTIC INFORMATION ITEMS" .

Freeze Frame Data and 1st Trip Freeze Frame Data

Freeze frame data item*	Description
DIAG TROUBLE CODE [PXXXX]	● The engine control component part/control system has a trouble code, it is displayed as PXXXX. (Refer to EC-803, "INDEX FOR DTC" .)
FUEL SYS-B1	● “Fuel injection system status” at the moment a malfunction is detected is displayed. ● One mode in the following is displayed. Mode2: Open loop due to detected system malfunction Mode3: Open loop due to driving conditions (power enrichment, deceleration enleanment) Mode4: Closed loop - using oxygen sensor(s) as feedback for fuel control Mode5: Open loop - has not yet satisfied condition to go to closed loop
CAL/LD VALUE [%]	● The calculated load value at the moment a malfunction is detected is displayed.
COOLANT TEMP [°C] or [°F]	● The engine coolant temperature at the moment a malfunction is detected is displayed.
L-FUEL TRM-B1 [%]	● “Long-term fuel trim” at the moment a malfunction is detected is displayed. ● The long-term fuel trim indicates much more gradual feedback compensation to the base fuel schedule than short-term fuel trim.
S-FUEL TRM-B1 [%]	● “Short-term fuel trim” at the moment a malfunction is detected is displayed. ● The short-term fuel trim indicates dynamic or instantaneous feedback compensation to the base fuel schedule.
ENGINE SPEED [rpm]	● The engine speed at the moment a malfunction is detected is displayed.
VEHICL SPEED [km/h] or [mph]	● The vehicle speed at the moment a malfunction is detected is displayed.
B/FUEL SCHDL [msec]	● The base fuel schedule at the moment a malfunction is detected is displayed.
INT/A TEMP SE [°C] or [°F]	● The intake air temperature at the moment a malfunction is detected is displayed.

*: The items are the same as those of 1st trip freeze frame data.

DATA MONITOR MODE
Monitored Item

×: Applicable

Monitored item [Unit]	ECM INPUT SIGNALS	MAIN SIG-NALS	Description	Remarks
ENG SPEED [rpm]	×	×	● Indicates the engine speed computed from the signals of the crankshaft position sensor (POS) and camshaft position sensor (PHASE).	● Accuracy becomes poor if engine speed drops below the idle rpm. ● If the signal is interrupted while the engine is running, an abnormal value may be indicated.
MAS A/F SE-B1 [V]	×	×	● The signal voltage of the mass air flow sensor is displayed.	● When the engine is stopped, a certain value is indicated.
B/FUEL SCHDL [msec]		×	● “Base fuel schedule” indicates the fuel injection pulse width programmed into ECM, prior to any learned on board correction.	
A/F ALPHA-B1 [%]		×	● The mean value of the air-fuel ratio feedback correction factor per cycle is indicated.	● When the engine is stopped, a certain value is indicated. ● This data also includes the data for the air-fuel ratio learning control.
COOLAN TEMP/S [°C] or [°F]	×	×	● The engine coolant temperature (determined by the signal voltage of the engine coolant temperature sensor) is displayed.	● When the engine coolant temperature sensor is open or short-circuited, ECM enters fail-safe mode. The engine coolant temperature determined by the ECM is displayed.
HO2S1 (B1) [V]	×	×	● The signal voltage of the heated oxygen sensor 1 is displayed.	
HO2S2 (B1) [V]	×		● The signal voltage of the heated oxygen sensor 2 is displayed.	
HO2S1 MNTR (B1) [RICH/LEAN]	×	×	● Display of heated oxygen sensor 1 signal during air-fuel ratio feedback control: RICH: means the mixture became “rich”, and control is being affected toward a leaner mixture. LEAN: means the mixture became “lean”, and control is being affected toward a rich mixture.	● After turning ON the ignition switch, “RICH” is displayed until air-fuel mixture ratio feedback control begins. ● When the air-fuel ratio feedback is clamped, the value just before the clamping is displayed continuously.
HO2S2 MNTR (B1) [RICH/LEAN]	×		● Display of heated oxygen sensor 2 signal: RICH: means the amount of oxygen after three way catalyst is relatively small. LEAN: means the amount of oxygen after three way catalyst is relatively large.	● When the engine is stopped, a certain value is indicated.
VHCL SPEED SE [km/h] or [mph]	×	×	● The vehicle speed computed from the vehicle speed signal is displayed.	
BATTERY VOLT [V]	×	×	● The power supply voltage of ECM is displayed.	
ACCEL SEN 1 [V]	×	×	● The accelerator pedal position sensor signal voltage is displayed.	● ACCEL SEN 2 signal is converted by ECM internally. Thus, it differs from ECM terminal voltage signal.
ACCEL SEN 2 [V]	×			
THRTL SEN 1 [V]	×	×	● The throttle position sensor signal voltage is displayed.	● THRTL SEN 2 signal is converted by ECM internally. Thus, it differs from ECM terminal voltage signal.
THRTL SEN 2 [V]	×			

Monitored item [Unit]	ECM INPUT SIGNALS	MAIN SIGNALS	Description	Remarks
INT/A TEMP SE [°C] or [°F]	×	×	● The intake air temperature (determined by the signal voltage of the intake air temperature sensor) is indicated.	
START SIGNAL [ON/OFF]	×	×	● Indicates start signal status [ON/OFF] computed by the ECM according to the signals of engine speed and battery voltage.	● After starting the engine, [OFF] is displayed regardless of the starter signal.
CLSD THL POS [ON/OFF]	×	×	● Indicates idle position [ON/OFF] computed by the ECM according to the accelerator pedal position sensor signal.	
AIR COND SIG [ON/OFF]	×	×	● Indicates [ON/OFF] condition of the air conditioner switch as determined by the air conditioner signal.	
P/N POSI SW [ON/OFF]	×	×	● Indicates [ON/OFF] condition from the park/neutral position (PNP) switch signal.	
PW/ST SIGNAL [ON/OFF]	×	×	● [ON/OFF] condition of the power steering system (determined by the signal sent from EPS control unit) is indicated.	
LOAD SIGNAL [ON/OFF]	×	×	● Indicates [ON/OFF] condition from the electrical load signal. ON: Rear window defogger switch is ON and/or lighting switch is in 2nd position. OFF: Both rear window defogger switch and lighting switch are OFF.	
IGNITION SW [ON/OFF]	×		● Indicates [ON/OFF] condition from ignition switch.	
HEATER FAN SW [ON/OFF]	×		● Indicates [ON/OFF] condition from the heater fan switch signal.	
BRAKE SW [ON/OFF]	×		● Indicates [ON/OFF] condition from the stop lamp switch signal.	
INJ PULSE-B1 [msec]		×	● Indicates the actual fuel injection pulse width compensated by ECM according to the input signals.	● When the engine is stopped, a certain computed value is indicated.
IGN TIMING [BTDC]		×	● Indicates the ignition timing computed by ECM according to the input signals.	● When the engine is stopped, a certain value is indicated.
CAL/LD VALUE [%]			● “Calculated load value” indicates the value of the current airflow divided by peak airflow.	
MASS AIRFLOW [g·m/s]			● Indicates the mass airflow computed by ECM according to the signal voltage of the mass air flow sensor.	
PURG VOL C/V [%]			● Indicates the EVAP canister purge volume control solenoid valve control value computed by the ECM according to the input signals. ● The opening becomes larger as the value increases.	
INT/V TIM (B1) [°CA]			● Indicates [°CA] of intake camshaft advanced angle.	
INT/V SOL (B1) [%]			● The control value of the intake valve timing control solenoid valve (determined by ECM according to the input signal) is indicated. ● The advance angle becomes larger as the value increases	

Monitored item [Unit]	ECM INPUT SIGNALS	MAIN SIG-NALS	Description	Remarks
AIR COND RLY [ON/OFF]		×	● The air conditioner relay control condition (determined by ECM according to the input signals) is indicated.	
FUEL PUMP RLY [ON/OFF]		×	● Indicates the fuel pump relay control condition determined by ECM according to the input signals.	
THRTL RELAY [ON/OFF]		×	● Indicates the throttle control motor relay control condition determined by the ECM according to the input signals.	
COOLING FAN [HI/LOW/OFF]			● Indicates the condition of the cooling fan (determined by ECM according to the input signals). HI: High speed operation LOW: Low speed operation OFF: Stop	
HO2S1 HTR (B1) [ON/OFF]			● Indicates [ON/OFF] condition of heated oxygen sensor 1 heater determined by ECM according to the input signals.	
HO2S2 HTR (B1) [ON/OFF]			● Indicates [ON/OFF] condition of heated oxygen sensor 2 heater determined by ECM according to the input signals.	
IDL A/V LEARN [YET/CMPLT]			● Display the condition of idle air volume learning YET: Idle Air Volume Learning has not been performed yet. CMPLT: Idle Air Volume Learning has already been performed successfully.	
TRVL AFTER MIL [km] or [mile]			● Distance traveled while MIL is activated.	
O2SEN HTR DTY [%]			● Indicates the heated oxygen sensor 1 heater control value computed by the ECM according to the input signals.	
I/P PULLY SPD [km/h] or [MPH]	×		● Indicates the engine speed computed from the turbine revolution sensor signal.	
AC PRESS SEN [V]	×		● The signal voltage from the refrigerant pressure sensor is displayed.	
Voltage [V]			● Voltage, frequency, duty cycle or pulse width measured by the probe.	● Only “#” is displayed if item is unable to be measured. ● Figures with “#”s are temporary ones. They are the same figures as an actual piece of data which was just previously measured.
Frequency [msec], [Hz] or [%]				
DUTY-HI				
DUTY-LOW				
PLS WIDTH-HI				
PLS WIDTH-LOW				

NOTE:
Any monitored item that does not match the vehicle being diagnosed is deleted from the display automatically.

DATA MONITOR (SPEC) MODE

Monitored Item

Monitored item [Unit]	ECM input signals	Main signals	Description	Remarks
ENG SPEED [rpm]	×	×	● Indicates the engine speed computed from the signal of the crankshaft position sensor (POS) and camshaft position sensor (PHASE).	
MAS A/F SE-B1 [V]	×	×	● The signal voltage of the mass air flow sensor specification is displayed.	● When engine is running specification range is indicated.
B/FUEL SCHDL [msec]		×	● "Base fuel schedule" indicates the fuel injection pulse width programmed into ECM, prior to any learned on board correction.	● When engine is running specification range is indicated.
A/F ALPHA-B1 [%]		×	● The mean value of the air-fuel ratio feedback correction factor per cycle is indicated.	● When engine is running specification range is indicated. ● This data also includes the data for the air-fuel ratio learning control.

NOTE:
Any monitored item that does not match the vehicle being diagnosed is deleted from the display automatically.

ACTIVE TEST MODE

Test Item

TEST ITEM	CONDITION	JUDGEMENT	CHECK ITEM (REMEDY)
FUEL INJECTION	● Engine: Return to the original trouble condition ● Change the amount of fuel injection using CONSULT-II.	If trouble symptom disappears, see CHECK ITEM.	● Harness and connectors ● Fuel injector ● Air fuel ratio (A/F) sensor 1
IGNITION TIMING	● Engine: Return to the original trouble condition ● Timing light: Set ● Retard the ignition timing using CONSULT-II.	If trouble symptom disappears, see CHECK ITEM.	● Perform Idle Air Volume Learning.
POWER BALANCE	● Engine: After warming up, idle the engine. ● A/C switch OFF ● Shift lever: P or N (A/T), Neutral (M/T) ● Cut off each fuel injector signal one at a time using CONSULT-II.	Engine runs rough or dies.	● Harness and connectors ● Compression ● Fuel injector ● Power transistor ● Spark plug ● Ignition coil
COOLING FAN*1, *2, *3	● Ignition switch: ON ● Turn the cooling fan "LOW", "MID", "HI" and "OFF" with CONSULT-II.	Cooling fan moves and stops.	● Harness and connectors ● Cooling fan relay ● Cooling fan motor
ENG COOLANT TEMP	● Engine: Return to the original trouble condition ● Change the engine coolant temperature using CONSULT-II.	If trouble symptom disappears, see CHECK ITEM.	● Harness and connectors ● Engine coolant temperature sensor ● Fuel injector
FUEL PUMP RELAY	● Ignition switch: ON (Engine stopped) ● Turn the fuel pump relay ON and OFF using CONSULT-II and listen to operating sound.	Fuel pump relay makes the operating sound.	● Harness and connectors ● Fuel pump relay

TEST ITEM	CONDITION	JUDGEMENT	CHECK ITEM (REMEDY)
PURG VOL CONT/V	● Engine: After warming up, run engine at 1,500 rpm. ● Change the EVAP canister purge volume control solenoid valve opening percent using CONSULT-II.	Engine speed changes according to the opening percent.	● Harness and connectors ● Solenoid valve
V/T ASSIGN ANGLE	● Engine: Return to the original trouble condition ● Change intake valve timing using CONSULT-II.	If trouble symptom disappears, see CHECK ITEM.	● Harness and connectors ● Intake valve timing control solenoid valve

*1: Leaving cooling fan OFF with CONSULT-II while engine is running may cause the engine to overheat.
*2: With A/C: “OFF”, “LOW”, “MID” or “HI” is displayed on CONSULT-II screen. But cooling fan operates at the same speed when “MID” or “HI” is displayed.
*3:Without A/C: “OFF”, “LOW”, “MID” or “HI” is displayed on CONSULT-II screen. But cooling fan operates at the same speed when an item other than “OFF” is displayed.

DTC & SRT CONFIRMATION MODE

SRT STATUS Mode

For details, refer to EC-834, "SYSTEM READINESS TEST (SRT) CODE" .

SRT WORK SUPPORT Mode

This mode enables a technician to drive a vehicle to set the SRT while monitoring the SRT status.

DTC WORK SUPPORT Mode

Test mode	Test item	Condition	Reference page
HO2S1	HO2S1 (B1) P0133	Refer to corresponding trouble diagnosis for DTC.	EC-967, "DTC P0133 HO2S1"
	HO2S1 (B1) P0134		EC-977, "DTC P0134 HO2S1"
	HO2S1 (B1) P1143		EC-1101, "DTC P1143 HO2S1"
	HO2S1 (B1) P1144		EC-1107, "DTC P1144 HO2S1"
HO2S2	HO2S2 (B1) P0139		EC-998, "DTC P0139 HO2S2"
	HO2S2 (B1) P1146		EC-1113, "DTC P1146 HO2S2"
	HO2S2 (B1) P1147		EC-1121, "DTC P1147 HO2S2"

REAL TIME DIAGNOSIS IN DATA MONITOR MODE (RECORDING VEHICLE DATA)

Description

CONSULT-II has two kinds of triggers and they can be selected by touching “SETTING” in “DATA MONITOR” mode.

1. “AUTO TRIG” (Automatic trigger):
   - The malfunction will be identified on the CONSULT-II screen in real time.
     In other words, DTC/1st trip DTC and malfunction item will be displayed if the malfunction is detected by ECM.
     At the moment a malfunction is detected by ECM, “MONITOR” in “DATA MONITOR” screen is changed to “Recording Data ... xx%” as shown at right, and the data after the malfunction detection is recorded. Then when the percentage reached 100%, “REAL-TIME DIAG” screen is displayed. If “STOP” is touched on the screen during “Recording Data ... xx%”, “REAL-TIME DIAG” screen is also displayed.

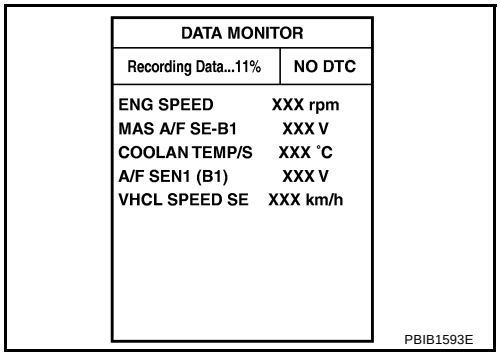

The recording time after the malfunction detection and the recording speed can be changed by “TRIGGER POINT” and “Recording Speed”. Refer to CONSULT-II OPERATION MANUAL.

2. “MANU TRIG” (Manual trigger):
   - DTC/1st trip DTC and malfunction item will not be displayed automatically on CONSULT-II screen even though a malfunction is detected by ECM.
     DATA MONITOR can be performed continuously even though a malfunction is detected.

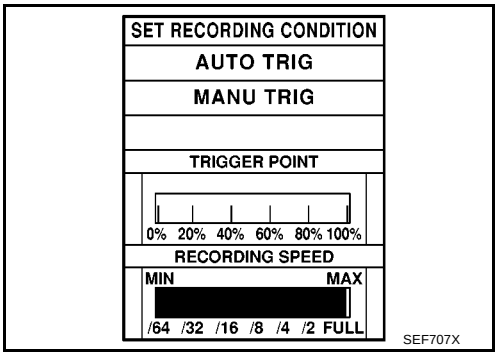

Operation

1. “AUTO TRIG”
   - While trying to detect the DTC/1st trip DTC by performing the “DTC Confirmation Procedure”, be sure to select to “DATA MONITOR (AUTO TRIG)” mode. You can confirm the malfunction at the moment it is detected.
   - While narrowing down the possible causes, CONSULT-II should be set in “DATA MONITOR (AUTO TRIG)” mode, especially in case the incident is intermittent.
     When you are inspecting the circuit by gently shaking (or twisting) the suspicious connectors, components and harness in the “DTC Confirmation Procedure”, the moment a malfunction is found the DTC/1st trip DTC will be displayed. (Refer to “INCIDENT SIMULATION TESTS” in GI-25, "How to Perform Efficient Diagnosis for an Electrical Incident" .)
2. “MANU TRIG”
   - If the malfunction is displayed as soon as “DATA MONITOR” is selected, reset CONSULT-II to “MANU TRIG”. By selecting “MANU TRIG” you can monitor and store the data. The data can be utilized for further diagnosis, such as a comparison with the value for the normal operating condition.

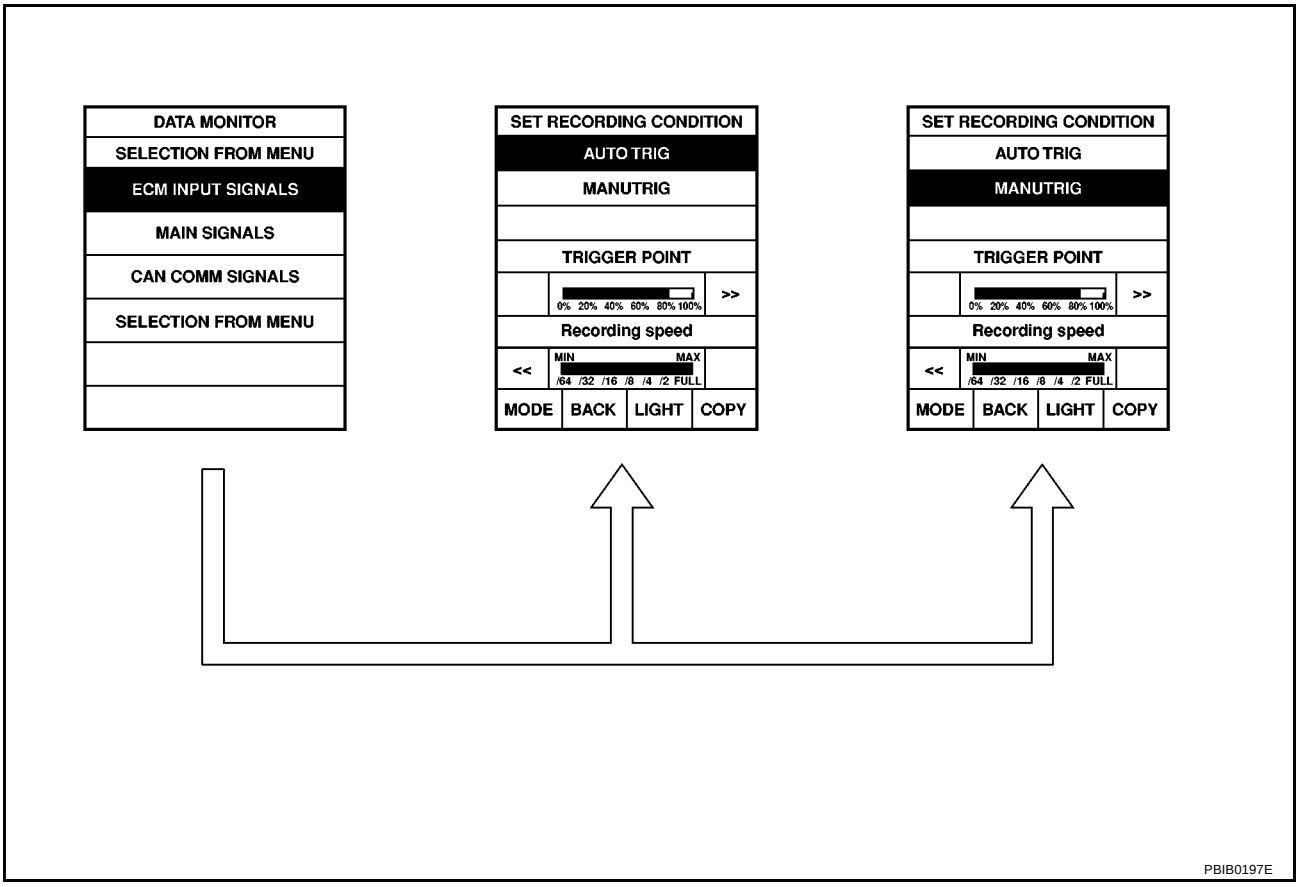

Generic Scan Tool (GST) Function

BBS0049V

DESCRIPTION

Generic Scan Tool (OBDII scan tool) complying with ISO 15031-4 has 8 different functions explained below.
ISO9141 is used as the protocol.
The name “GST” or “Generic Scan Tool” is used in this service manual.

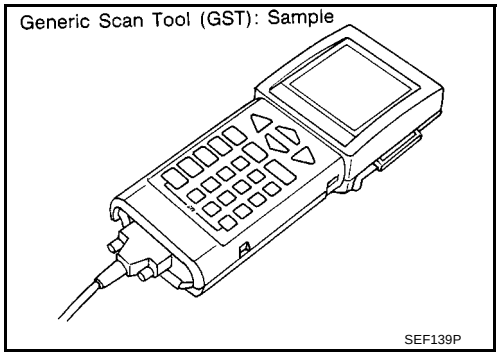

FUNCTION

Diagnostic service		Function
Service $01	READINESS TESTS	This diagnostic service gains access to current emission-related data values, including analog inputs and outputs, digital inputs and outputs, and system status information.
Service $02	(FREEZE DATA)	This diagnostic service gains access to emission-related data value which were stored by ECM during the freeze frame. For details, refer to EC-834, "FREEZE FRAME DATA AND 1ST TRIP FREEZE FRAME DATA" .
Service $03	DTCs	This diagnostic service gains access to emission-related power train trouble codes which were stored by ECM.
Service $04	CLEAR DIAG INFO	This diagnostic service can clear all emission-related diagnostic information. This includes: ● Clear number of diagnostic trouble codes (Service $01) ● Clear diagnostic trouble codes (Service $03) ● Clear trouble code for freeze frame data (Service $01) ● Clear freeze frame data (Service $02) ● Reset status of system monitoring test (Service $01) ● Clear on board monitoring test results (Service $06 and $07)
Service $06	(ON BOARD TESTS)	This diagnostic service accesses the results of on board diagnostic monitoring tests of specific components/systems that are not continuously monitored.
Service $07	(ON BOARD TESTS)	This diagnostic service enables the off board test drive to obtain test results for emission-related powertrain components/systems that are continuously monitored during normal driving conditions.
Service $08	—	This diagnostic service is not applicable on this vehicle.
Service $09	(CALIBRATION ID)	This diagnostic service enables the off-board test device to request specific vehicle information such as Vehicle Identification Number (VIN) and Calibration IDs.

INSPECTION PROCEDURE

1. Turn ignition switch OFF.
2. Connect GST to data link connector (1), which is located under LH dash panel.

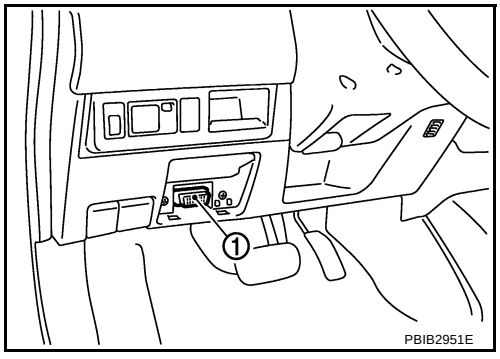

3. Turn ignition switch ON.
4. Enter the program according to instruction on the screen or in the operation manual.
   (*: Regarding GST screens in this section, sample screens are shown.)

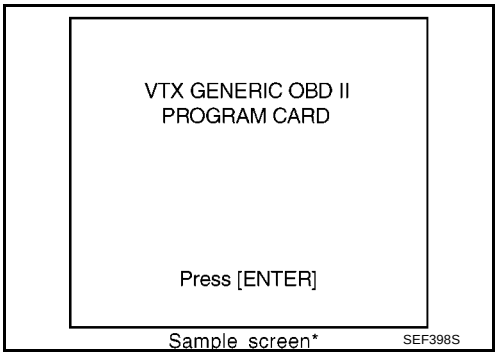

5. Perform each diagnostic service according to each service procedure.
   For further information, see the GST Operation Manual of the tool maker.

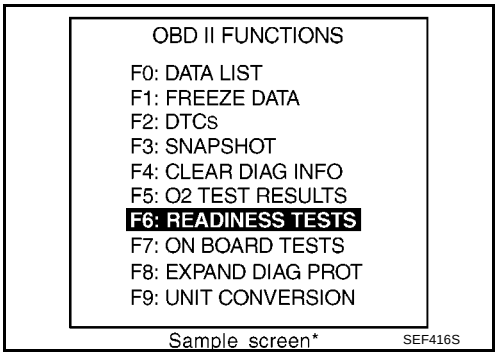

CONSULT-II Reference Value in Data Monitor

BBS0049W

Remarks:
- Specification data are reference values.
- Specification data are output/input values which are detected or supplied by the ECM at the connector.
  * Specification data may not be directly related to their components signals/values/operations.
  i.e. Adjust ignition timing with a timing light before monitoring IGN TIMING, because the monitor may show the specification data in spite of the ignition timing not being adjusted to the specification data. This IGN TIMING monitors the data calculated by the ECM according to the signals input from the camshaft position sensor and other ignition timing related sensors.

MONITOR ITEM	CONDITION		SPECIFICATION
ENG SPEED	● Run engine and compare CONSULT-II value with the tachometer indication.		Almost the same speed as the tachometer indication.
MAS A/F SE-B1	See EC-907, "TROUBLE DIAGNOSIS - SPECIFICATION VALUE" .		
B/FUEL SCHDL	See EC-907, "TROUBLE DIAGNOSIS - SPECIFICATION VALUE" .		
A/F ALPHA-B1	See EC-907, "TROUBLE DIAGNOSIS - SPECIFICATION VALUE" .		
COOLAN TEMP/S	● Engine: After warming up		More than 70°C (158°F)
HO2S1 (B1)	● Engine: After warming up	Maintaining engine speed at 2,000 rpm	0 - 0.3V ←→ Approx. 0.6 - 1.0V
HO2S2 (B1)	● Revving engine from idle to 3,000 rpm quickly after the following conditions are met. – Engine: After warming up – Keep the engine speed between 3,500 rpm and 4,000 rpm for 1 minute and idle for 1 minute under no load		0 - 0.3V ←→ Approx. 0.6 - 1.0V
HO2S1 MNTR (B1)	● Engine: After warming up	Maintaining engine speed at 2,000 rpm	LEAN ←→ RICH Changes more than 5 times during 10 seconds.
HO2S2 MNTR (B1)	● Revving engine from idle to 3,000 rpm quickly after the following conditions are met. – Engine: After warming up – Keep the engine speed between 3,500 rpm and 4,000 rpm for 1 minute and idle for 1 minute under no load		LEAN ←→ RICH
VHCL SPEED SE	● Turn drive wheels and compare CONSULT-II value with the speedometer indication.		Almost the same speed as the speedometer indication.
BATTERY VOLT	● Ignition switch: ON (Engine stopped)		11 - 14V
ACCEL SEN 1	● Ignition switch: ON (Engine stopped)	Accelerator pedal: Fully released	0.6 - 0.9V
		Accelerator pedal: Fully depressed	4.0 - 4.8V
ACCEL SEN 2*1	● Ignition switch: ON (Engine stopped)	Accelerator pedal: Fully released	0.6 - 0.9V
		Accelerator pedal: Fully depressed	3.9 - 4.8V
THRTL SEN 1 THRTL SEN 2*1	● Ignition switch: ON (Engine stopped)	Accelerator pedal: Fully released	More than 0.36V
	● Shift lever: D (A/T), 1st (M/T)	Accelerator pedal: Fully depressed	Less than 4.75V
START SIGNAL	● Ignition switch: ON → START → ON		OFF → ON → OFF
CLSD THL POS	● Ignition switch: ON	Accelerator pedal: Fully released	ON
		Accelerator pedal: Slightly depressed	OFF
AIR COND SIG	● Engine: After warming up, idle the engine	Air conditioner switch: OFF	OFF
		Air conditioner switch: ON (Compressor operates.)	ON
P/N POSI SW	● Ignition switch: ON	Shift lever: P or N (A/T), Neutral (M/T)	ON
		Shift lever: Except above	OFF
PW/ST SIGNAL	● Engine: After warming up, idle the engine	Steering wheel: Not being turned.	OFF
		Steering wheel: Being turned.	ON

MONITOR ITEM	CONDITION		SPECIFICATION
LOAD SIGNAL	● Ignition switch: ON	Rear window defogger switch: ON and/or Lighting switch: 2nd	ON
		Rear window defogger switch and lighting switch: OFF	OFF
IGNITION SW	● Ignition switch: ON → OFF → ON		ON → OFF → ON
HEATER FAN SW	● Ignition switch: ON	Heater fan: Operating.	ON
		Heater fan: Not operating	OFF
BRAKE SW	● Ignition switch: ON	Brake pedal: Fully released	OFF
		Brake pedal: Slightly depressed	ON
INJ PULSE-B1	● Engine: After warming up ● Air conditioner switch: OFF ● Shift lever: P or N (A/T), Neutral (M/T) ● No load	Idle	2.0 - 3.0 msec
		2,000 rpm	1.9 - 2.9 msec
IGN TIMING	● Engine: After warming up ● Air conditioner switch: OFF ● Shift lever: P or N (A/T), Neutral (M/T) ● No load	Idle	1° - 11° BTDC
		2,000 rpm	25° - 45° BTDC
CAL/LD VALUE	● Engine: After warming up ● Air conditioner switch: OFF ● Shift lever: P or N (A/T), Neutral (M/T) ● No load	Idle	10% - 35%
		2,500 rpm	10% - 35%
MASS AIRFLOW	● Engine: After warming up ● Air conditioner switch: OFF ● Shift lever: P or N (A/T), Neutral (M/T) ● No load	Idle	1.0 - 4.0 g·m/s
		2,500 rpm	2.0 - 10.0 g·m/s
PURG VOL C/V	● Engine: After warming up ● Air conditioner switch: OFF ● Shift lever: P or N (A/T), Neutral (M/T) ● No load	Idle	0%
		2,000 rpm	0 - 50%
INT/V TIM (B1)	● Engine: After warming up ● Air conditioner switch: OFF ● Shift lever: P or N (A/T), Neutral (M/T) ● No load	Idle	–5° - 5°CA
		2,500 rpm	Approx. 0° - 40°CA
INT/V SOL (B1)	● Engine: After warming up ● Air conditioner switch: OFF ● Shift lever: P or N (A/T), Neutral (M/T) ● No load	Idle	0% - 2%
		2,500 rpm	Approx. 0% - 90%
AIR COND RLY	● Engine: After warming up, idle the engine	Air conditioner switch: OFF	OFF
		Air conditioner switch: ON (Compressor operates)	ON

MONITOR ITEM	CONDITION		SPECIFICATION
FUEL PUMP RLY	● For 1 second after turning ignition switch ON ● Engine running or cranking		ON
	● Except above conditions		OFF
THRTL RELAY	● Ignition switch: ON		ON
COOLING FAN	● Engine: After warming up, idle the engine ● Air conditioner switch: OFF	Engine coolant temperature is 94°C (201°F) or less	OFF
		Engine coolant temperature is between 95°C (203°F) and 99°C (210°F)	LOW*2
		Engine coolant temperature is 100°C (212°F) or more	HIGH*2
HO2S1 HTR (B1)	● Engine: After warming up ● Engine speed: Below 3,600 rpm		ON
	● Engine speed: Above 3,600 rpm		OFF
HO2S2 HTR (B1)	● Below 3,600 rpm after the following conditions are met. – Engine: After warming up – Keeping the engine speed between 3,500 and 4,000 rpm for 1 minute and at idle for 1 minute under no load		ON
	● Engine speed: Above 3,600 rpm		OFF
I/P PULLY SPD	● Vehicle speed: More than 20 km/h (12 MPH)		Almost the same speed as the tachometer indication
TRVL AFTER MIL	● Ignition switch: ON	Vehicle has traveled after MI has turned ON.	0 - 65,535 km (0 - 40,723 mile)
O2SEN HTR DTY	● Engine coolant temperature when engine started: More than 80°C (176°F) ● Engine speed: below 3,600 rpm		Approx. 30%
AC PRESS SEN	● Engine: Idle ● Air conditioner switch: ON (Compressor operates)		1.0 - 4.0V

*1: Accelerator pedal position sensor 2 signal and throttle position sensor 2 signal are converted by ECM internally. Thus, they differ from ECM terminals voltage signal.
*2: Models without air conditioner, cooling fan operates only ON and OFF operation, but CONSULT-II display will change OFF, LOW and HI depends on engine coolant temperature.

Major Sensor Reference Graph in Data Monitor Mode

BBS0049X

The following are the major sensor reference graphs in “DATA MONITOR” mode.

CLSD THL POS, ACCEL SEN 1, THRTL SEN 1

Below is the data for “CLSD THL POS”, “ACCEL SEN 1” and “THRTL SEN 1” when depressing the accelerator pedal with the ignition switch ON and with shift lever in D position (A/T), 1st position (M/T).
The signal of “ACCEL SEN 1” and “THRTL SEN 1” should rise gradually without any intermittent drop or rise after “CLSD THL POS” is changed from “ON” to “OFF”.

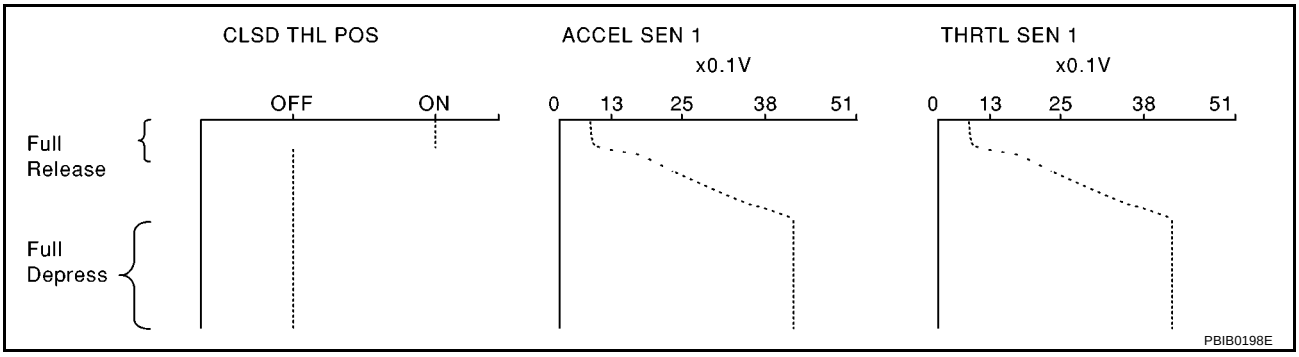

ENG SPEED, MAS A/F SE-B1, THRTL SEN 1, HO2S2 (B1), INJ PULSE-B1

Below is the data for “ENG SPEED”, “MAS A/F SE-B1”, “THRTL SEN 1”, “HO2S2 (B1)” and “INJ PULSE-B1” when revving engine quickly up to 4,800 rpm under no load after warming up engine sufficiently.
Each value is for reference, the exact value may vary.

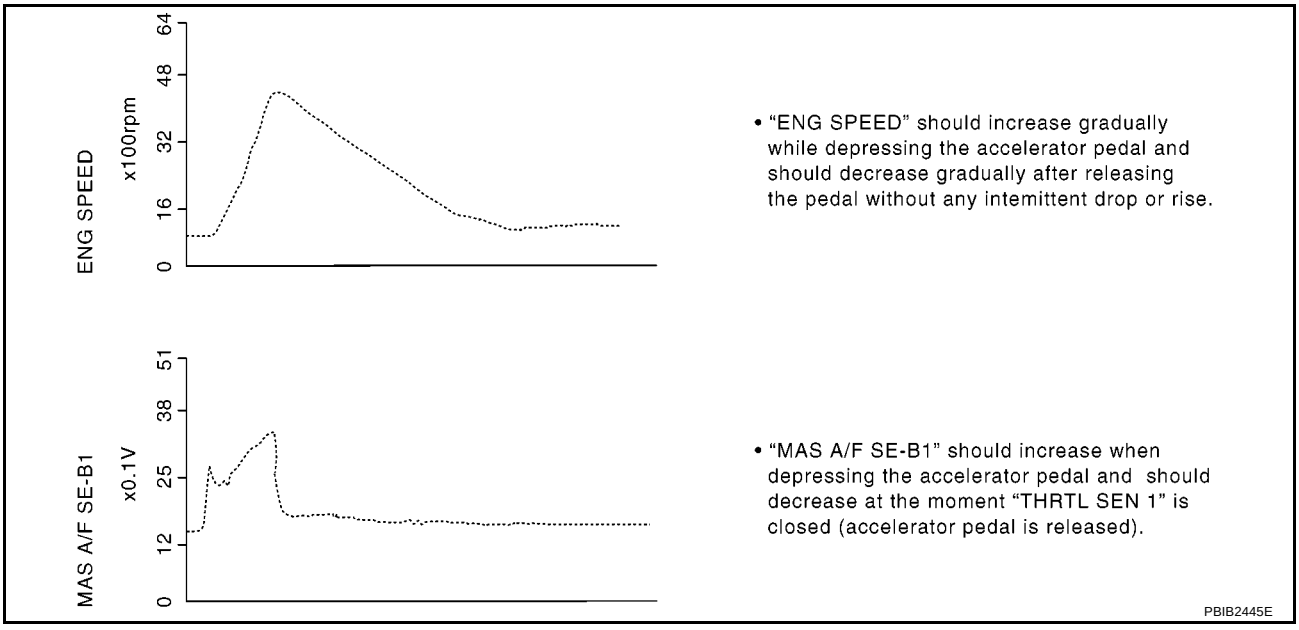

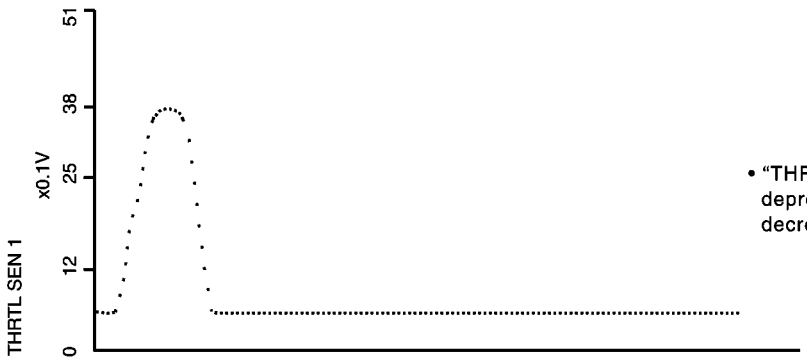

• "THRTL SEN 1" should increase while depressing the accelerator pedal and should decrease while releasing it.

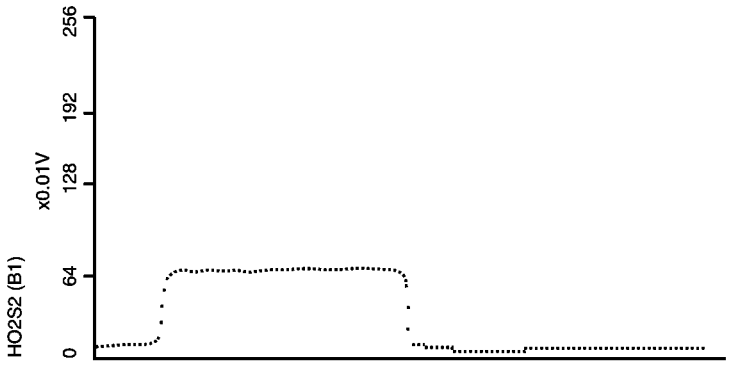

• "HO2S2 (B1)" may increase immediately after depressing the accelerator pedal and may decrease after releasing the pedal.

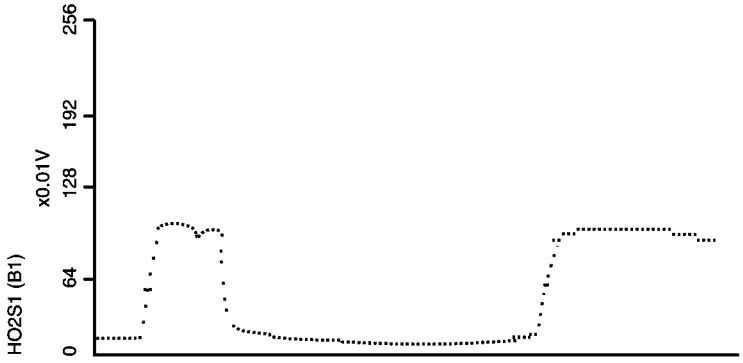

• "HO2S1 (B1)" may increase immediately after depressing the accelerator pedal and may decrease after releasing the pedal.

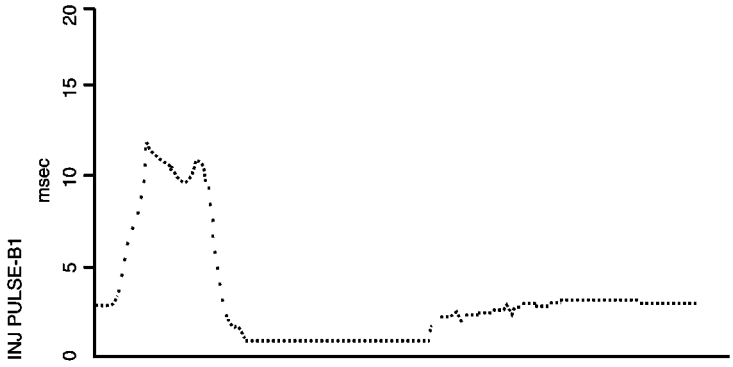

• "INJ PULSE-B1" should increase when depressing the accelerator pedal and should decrease when the pedal is released.

PBIB0668E

TROUBLE DIAGNOSIS - SPECIFICATION VALUE

PFP:00031

Description

BBS0049Y

The specification (SP) value indicates the tolerance of the value that is displayed in “DATA MONITOR (SPEC)” mode of CONSULT-II during normal operation of the Engine Control System. When the value in “DATA MONITOR (SPEC)” mode is within the SP value, the Engine Control System is confirmed OK. When the value in “DATA MONITOR (SPEC)” mode is NOT within the SP value, the Engine Control System may have one or more malfunctions.
The SP value is used to detect malfunctions that may affect the Engine Control System, but will not light the MI.
The SP value will be displayed for the following three items:

- B/FUEL SCHDL (The fuel injection pulse width programmed into ECM prior to any learned on board correction)
- A/F ALPHA-B1 (The mean value of air-fuel ratio feedback correction factor per cycle)
- MAS A/F SE-B1 (The signal voltage of the mass air flow sensor)

Testing Condition

BBS0049Z

- Vehicle driven distance: More than 5,000 km (3,107 miles)
- Barometric pressure: 98.3 - 104.3 kPa (0.983 - 1.043 bar, 1.003 - 1.064 kg/cm^2 , 14.25 - 15.12 psi)
- Atmospheric temperature: 20 - 30°C (68 - 86°F)
- Engine coolant temperature: 75 - 95°C (167 - 203°F)
- Engine speed: Idle
- Transmission: Warmed-up
  - A/T models: After the engine is warmed up to normal operating temperature, drive vehicle until “FLUID TEMP SE” (A/T fluid temperature sensor signal) indicates more than 60°C (140°F).
  - M/T models: After the engine is warmed up to normal operating temperature, drive vehicle for 5 minutes.
- Electrical load: Not applied
  - Rear window defogger switch, air conditioner switch, lighting switch are OFF. Steering wheel is straight ahead.

Inspection Procedure

BBS004A0

NOTE:
Perform “DATA MONITOR (SPEC)” mode in maximum scale display.

1. Perform EC-851, "Basic Inspection" .
2. Confirm that the testing conditions indicated above are met.
3. Select “B/FUEL SCHDL”, “A/F ALPHA-B1” and “MAS A/F SE-B1” in “DATA MONITOR (SPEC)” mode with CONSULT-II.
4. Make sure that monitor items are within the SP value.
5. If NG, go to EC-908, "Diagnostic Procedure" .

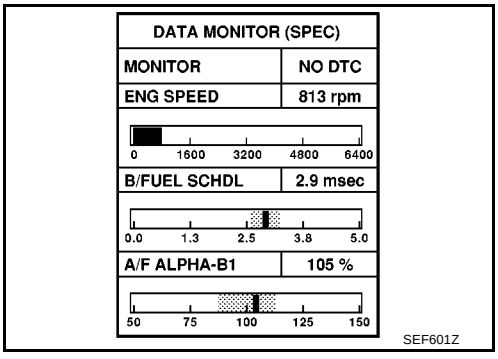

Diagnostic Procedure

BBS004A1

OVERALL SEQUENCE

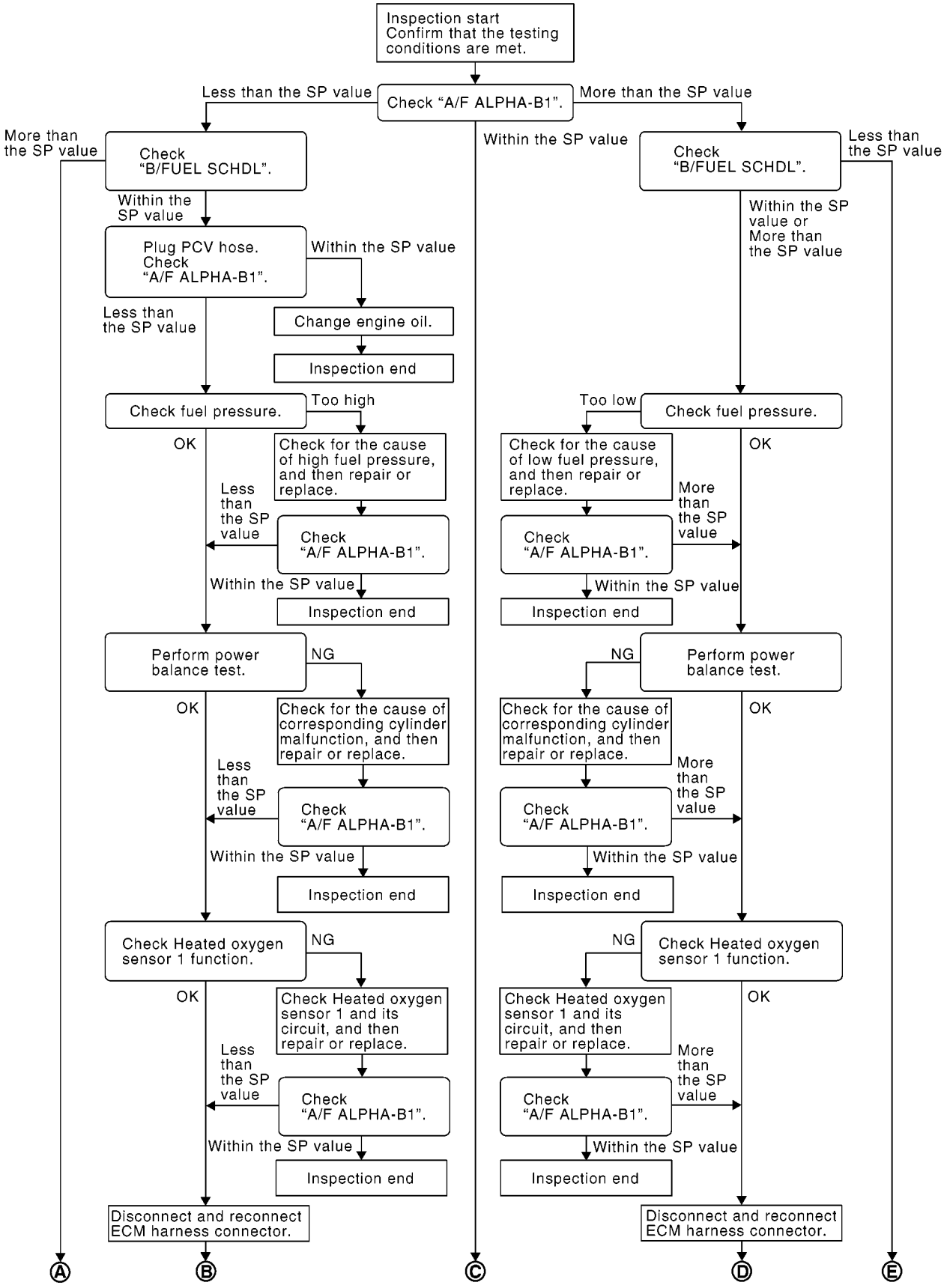

PBIB2384E

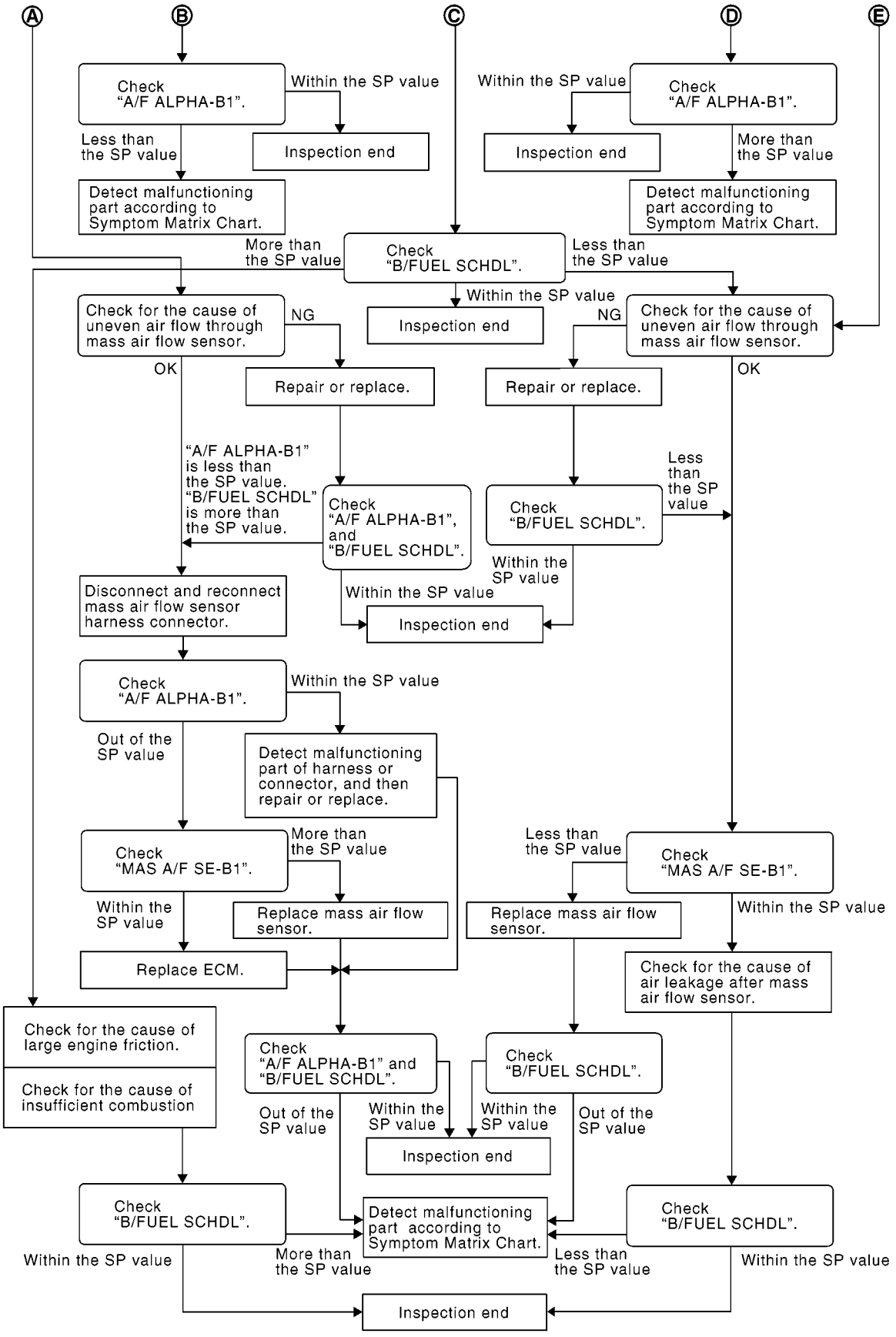
A
B
C
D
E
Check "A/F ALPHA-B1".
Within the SP value
Inspection end
Less than the SP value
Detect malfunctioning part according to Symptom Matrix Chart.
Check "A/F ALPHA-B1".
Within the SP value
Inspection end
More than the SP value
Detect malfunctioning part according to Symptom Matrix Chart.
More than the SP value
Check "B/FUEL SCHDL".
Less than the SP value
Within the SP value
Inspection end
Check for the cause of uneven air flow through mass air flow sensor.
NG
OK
Repair or replace.
Check for the cause of uneven air flow through mass air flow sensor.
NG
OK
Repair or replace.
"A/F ALPHA-B1" is less than the SP value. "B/FUEL SCHDL" is more than the SP value.
Check "A/F ALPHA-B1", and "B/FUEL SCHDL".
Check "B/FUEL SCHDL".
Less than the SP value
Within the SP value
Within the SP value
Inspection end
Disconnect and reconnect mass air flow sensor harness connector.
Check "A/F ALPHA-B1".
Within the SP value
Out of the SP value
Detect malfunctioning part of harness or connector, and then repair or replace.
Check "MAS A/F SE-B1".
More than the SP value
Within the SP value
Replace mass air flow sensor.
Replace ECM.
Less than the SP value
Check "MAS A/F SE-B1".
Replace mass air flow sensor.
Within the SP value
Check for the cause of air leakage after mass air flow sensor.
Check for the cause of large engine friction.
Check for the cause of insufficient combustion
Check "A/F ALPHA-B1" and "B/FUEL SCHDL".
Check "B/FUEL SCHDL".
Out of the SP value
Within the SP value
Within the SP value
Out of the SP value
Inspection end
Check "B/FUEL SCHDL".
Detect malfunctioning part according to Symptom Matrix Chart.
Check "B/FUEL SCHDL".
Within the SP value
More than the SP value
Less than the SP value
Within the SP value
Inspection end
PBIB3213E

DETAILED PROCEDURE

1. CHECK “A/F ALPHA-B1”

1. Start engine.
2. Confirm that the testing conditions are met. Refer to EC-907, "Testing Condition" .
3. Select “A/F ALPHA-B1” in “DATA MONITOR (SPEC)” mode, and make sure that the each indication is within the SP value.

   NOTE:
   Check “A/F ALPHA-B1” for approximately 1 minute because they may fluctuate. It is NG if the indication is out of the SP value even a little.

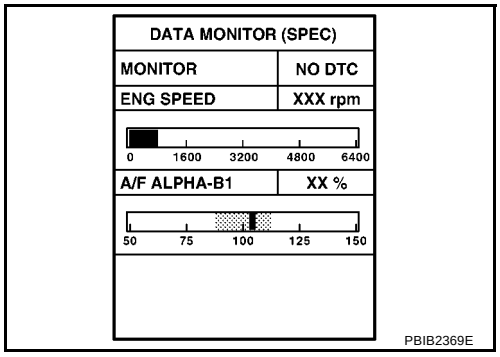

OK or NG

OK >> GO TO 17.
NG (Less than the SP value)>>GO TO 2.
NG (More than the SP value)>>GO TO 3.

2. CHECK “B/FUEL SCHDL”

Select “B/FUEL SCHDL” in “DATA MONITOR (SPEC)” mode, and make sure that the indication is within the SP value.

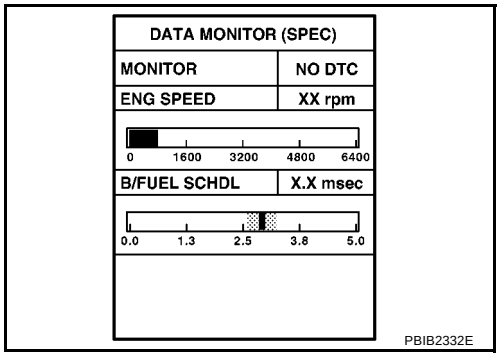

OK or NG

OK >> GO TO 4.
NG (More than the SP value)>>GO TO 19.

3. CHECK “B/FUEL SCHDL”

Select “B/FUEL SCHDL” in “DATA MONITOR (SPEC)” mode, and make sure that the indication is within the SP value.

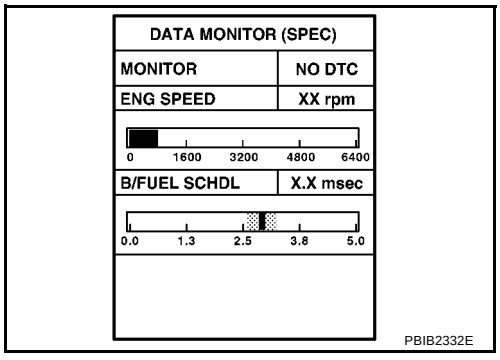

OK or NG

OK >> GO TO 6.
NG (More than the SP value)>>GO TO 6.
NG (Less than the SP value)>>GO TO 25.

4. CHECK “A/F ALPHA-B1”

1. Stop the engine.
2. Disconnect PCV hose, and then plug it.
3. Start engine.
4. Select “A/F ALPHA-B1” in “DATA MONITOR (SPEC)” mode, and make sure that the each indication is within the SP value.

OK or NG

OK >> GO TO 5.
NG >> GO TO 6.

5. CHANGE ENGINE OIL

1. Stop the engine.
2. Change engine oil.

NOTE:
This symptom may occur when a large amount of gasoline is mixed with engine oil because of driving conditions (such as when engine oil temperature does not rise enough since a journey distance is too short during winter). The symptom will not be detected after changing engine oil or changing driving condition.

>> **INSPECTION END**

6. CHECK FUEL PRESSURE

Check fuel pressure. (Refer to EC-860, "FUEL PRESSURE CHECK" .)

OK or NG

OK >> GO TO 9.
NG (Fuel pressure is too high)>>Replace fuel pressure regulator, refer to EC-860, "FUEL PRESSURE CHECK" . GO TO 8.
NG (Fuel pressure is too low)>>GO TO 7.

7. DETECT MALFUNCTIONING PART

1. Check the following.
- Clogged and bent fuel hose and fuel tube
- Clogged fuel filter
- Fuel pump and its circuit (Refer to EC-1215, "FUEL PUMP" .)
2. If NG, repair or replace the malfunctioning part. (Refer to EC-860, "FUEL PRESSURE CHECK" .)
If OK, replace fuel pressure regulator.

>> GO TO 8.

8. CHECK “A/F ALPHA-B1”

1. Start engine.
2. Select “A/F ALPHA-B1” in “DATA MONITOR (SPEC)” mode, and make sure that the each indication is within the SP value.

OK or NG

OK >> **INSPECTION END**
NG >> GO TO 9.

9. PERFORM POWER BALANCE TEST

1. Perform “POWER BALANCE” in “ACTIVE TEST” mode.
2. Make sure that the each cylinder produces a momentary engine speed drop.

OK or NG

OK >> GO TO 12.
NG >> GO TO 10.

ACTIVE TEST	
POWER BALANCE	
MONITOR	
ENG SPEED	XXX rpm
MAS A/F SE-B1	XXX V

PBIB0133E

10. DETECT MALFUNCTIONING PART

1. Check the following.
- Ignition coil and its circuit (Refer to EC-1221, "IGNITION SIGNAL" .)
- Fuel injector and its circuit (Refer to EC-1209, "FUEL INJECTOR" .)
- Intake air leakage
- Low compression pressure (Refer to EM-173, "CHECKING COMPRESSION PRESSURE" .)
2. If NG, repair or replace the malfunctioning part.
   If OK, replace fuel injector. (It may be caused by leakage from fuel injector or clogging.)

>> GO TO 11.

11. CHECK “A/F ALPHA-B1”

1. Start engine.
2. Select “A/F ALPHA-B1” in “DATA MONITOR (SPEC)” mode, and make sure that the each indication is within the SP value.

OK or NG

OK >> **INSPECTION END**
NG >> GO TO 12.

12. CHECK HEATED OXYGEN SENSOR 1 FUNCTION

1. Run engine at about 2,000 rpm for about 2 minutes under no load.
2. Select “HO2S1 MNTR (B1)”, in “DATA MONITOR” mode.
3. Running engine at 2,000 rpm under no load (The engine is warmed up to normal operating temperature.), check that the monitor fluctuates between LEAN and RICH more than 5 times during 10 seconds.

   1 time : RICH → LEAN → RICH

   2 times : RICH → LEAN → RICH → LEAN → RICH

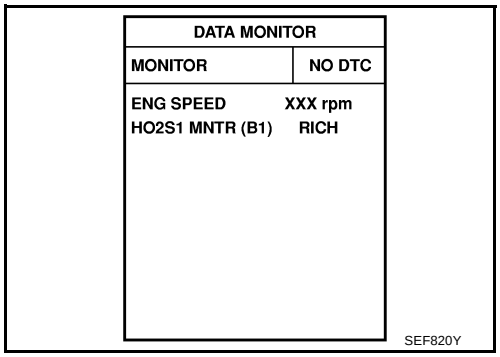

OK or NG

OK >> GO TO 15.
NG >> GO TO 13.

13. CHECK HEATED OXYGEN SENSOR 1 CIRCUIT

Check heated oxygen sensor 1 and its circuit. Refer to EC-977, "DTC P0134 HO2S1" .

>> GO TO 14.

14. CHECK “A/F ALPHA-B1”

1. Start engine.
2. Select “A/F ALPHA-B1” in “DATA MONITOR (SPEC)” mode, and make sure that the each indication is within the SP value.

OK or NG

OK >> **INSPECTION END**
NG >> GO TO 15.

15. DISCONNECT AND RECONNECT ECM HARNESS CONNECTOR

1. Stop the engine.
2. Disconnect ECM harness connector. Check pin terminal and connector for damage, and then reconnect it.

>> GO TO 16.

16. CHECK “A/F ALPHA-B1”

1. Start engine.
2. Select “A/F ALPHA-B1” in “DATA MONITOR (SPEC)” mode, and make sure that the each indication is within the SP value.

OK or NG

OK >> **INSPECTION END**
NG >> Detect malfunctioning part according to EC-871, "Symptom Matrix Chart" .

17. CHECK “B/FUEL SCHDL”

Select “B/FUEL SCHDL” in “DATA MONITOR (SPEC)” mode, and make sure that the indication is within the SP value.

OK or NG

OK >> **INSPECTION END**
NG (More than the SP value)>>GO TO 18.
NG (Less than the SP value)>>GO TO 25.

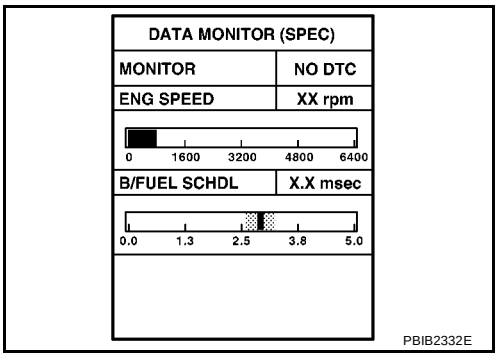

18. DETECT MALFUNCTIONING PART

1. Check for the cause of large engine friction. Refer to the following.
- Engine oil level is too high
- Engine oil viscosity
- Belt tension of power steering, alternator, A/C compressor, etc. is excessive
- Noise from engine
- Noise from transmission, etc.
2. Check for the cause of insufficient combustion. Refer to the following.
- Valve clearance malfunction
- Intake valve timing control function malfunction
- Camshaft sprocket installation malfunction, etc.

>> Repair or replace malfunctioning part, and then GO TO 30.

19. CHECK INTAKE SYSTEM

Check for the cause of uneven air flow through mass air flow sensor. Refer to the following.

- Crushed air ducts
- Malfunctioning seal of air cleaner element
- Uneven dirt of air cleaner element
- Improper specification of intake air system

OK or NG

OK >> GO TO 21.
NG >> Repair or replace malfunctioning part, and then GO TO 20.

20. CHECK “A/F ALPHA-B1” AND “B/FUEL SCHDL”

Select “A/F ALPHA-B1” and “B/FUEL SCHDL” in “DATA MONITOR (SPEC)” mode, and make sure that the each indication is within the SP value.

OK or NG

OK >> **INSPECTION END**
NG (“B/FUEL SCHDL” is more, “A/F ALPHA-B1” is less than the SP value)>>GO TO 21.

21. DISCONNECT AND RECONNECT MASS AIR FLOW SENSOR HARNESS CONNECTOR

1. Stop the engine.
2. Disconnect mass air flow sensor harness connector. Check pin terminal and connector for damage and then reconnect it again.

>> GO TO 22.

22. CHECK “A/F ALPHA-B1”

1. Start engine.
2. Select “A/F ALPHA-B1” in “DATA MONITOR (SPEC)” mode, and make sure that the each indication is within the SP value.

OK or NG

OK >> 1. Detect malfunctioning part of mass air flow sensor circuit and repair it. Refer to EC-935, "DTC P0102, P0103 MAF SENSOR" .
2. GO TO 29.

NG >> GO TO 23.

23. CHECK “MAS A/F SE-B1”

Select “MAS A/F SE-B1” in “DATA MONITOR (SPEC)” mode, and make sure that the indication is within the SP value.

OK or NG

OK >> GO TO 24.
NG (More than the SP value)>>Replace mass air flow sensor, and then GO TO 29.

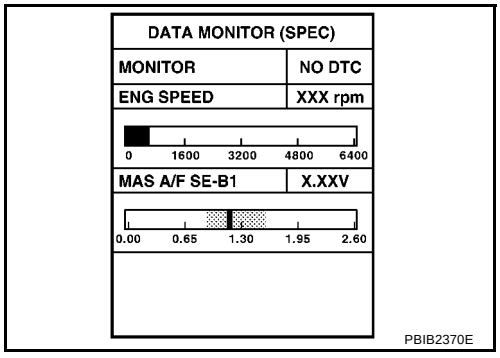

24. REPLACE ECM

1. Replace ECM.
2. Perform initialization of NATS system and registration of all NATS ignition key IDs. Refer to BL-215, "NATS (Nissan Anti-Theft System)" .
3. Perform EC-857, "Accelerator Pedal Released Position Learning" .
4. Perform EC-857, "Throttle Valve Closed Position Learning" .
5. Perform EC-858, "Idle Air Volume Learning" .

>> GO TO 29.

25. CHECK INTAKE SYSTEM

Check for the cause of uneven air flow through mass air flow sensor. Refer to the following.

- Crushed air ducts
- Malfunctioning seal of air cleaner element
- Uneven dirt of air cleaner element
- Improper specification of intake air system

OK or NG

OK >> GO TO 27.
NG >> Repair or replace malfunctioning part, and then GO TO 26.

26. CHECK “B/FUEL SCHDL”

Select “B/FUEL SCHDL” in “DATA MONITOR (SPEC)” mode, and make sure that the indication is within the SP value.

OK or NG

OK >> **INSPECTION END**
NG (Less than the SP value)>>GO TO 27.

27. CHECK “MAS A/F SE-B1”

Select “MAS A/F SE-B1” in “DATA MONITOR (SPEC)” mode, and make sure that the indication is within the SP value.

OK or NG

OK >> GO TO 28.
NG (Less than the SP value)>>Replace mass air flow sensor, and then GO TO 30.

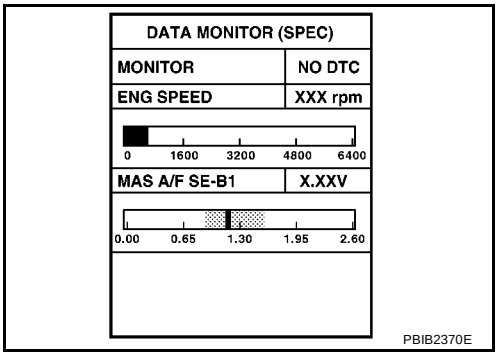

28. CHECK INTAKE SYSTEM

Check for the cause of air leak after the mass air flow sensor. Refer to the following.

- Disconnection, looseness, and cracks in air duct
- Looseness of oil filler cap
- Disconnection of oil level gauge
- Open stuck, breakage, hose disconnection, or cracks of PCV valve
- Disconnection or cracks of EVAP purge hose, open stuck of EVAP canister purge volume control solenoid valve
- Malfunctioning seal of rocker cover gasket
- Disconnection, looseness, or cracks of hoses, such as vacuum hose, connecting to intake air system parts
- Malfunctioning seal of intake air system, etc.

>> GO TO 30.

29. CHECK “A/F ALPHA-B1” AND “B/FUEL SCHDL”

Select “A/F ALPHA-B1” and “B/FUEL SCHDL” in “DATA MONITOR (SPEC)” mode, and make sure that the each indication is within the SP value.

OK or NG

OK >> **INSPECTION END**
NG >> Detect malfunctioning part according to EC-871, "Symptom Matrix Chart" .

30. CHECK “B/FUEL SCHDL”

Select “B/FUEL SCHDL” in “DATA MONITOR (SPEC)” mode, and then make sure that the indication is within the SP value.

OK or NG

OK >> **INSPECTION END**
NG >> Detect malfunctioning part according to EC-871, "Symptom Matrix Chart" .

TROUBLE DIAGNOSIS FOR INTERMITTENT INCIDENT

PFP:00006

Description

BBS004A2

Intermittent incidents may occur. In many cases, the malfunction resolves itself (the part or circuit function returns to normal without intervention). It is important to realize that the symptoms described in the customer's complaint often do not recur on (1st trip) DTC visits. Realize also that the most frequent cause of intermittent incidents occurrences is poor electrical connections. Because of this, the conditions under which the incident occurred may not be clear. Therefore, circuit checks made as part of the standard diagnostic procedure may not indicate the specific malfunctioning area.

Common Intermittent Incidents Report Situations

STEP in Work Flow	Situation
2	The CONSULT-II is used. The SELF-DIAG RESULTS screen shows time data other than [0] or [1t].
3 or 4	The symptom described by the customer does not recur.
5	(1st trip) DTC does not appear during the DTC Confirmation Procedure.
10	The Diagnostic Procedure for PXXXX does not indicate the malfunctioning area.

Diagnostic Procedure

BBS004A3

1. INSPECTION START

Erase (1st trip) DTCs. Refer to EC-841, "HOW TO ERASE EMISSION-RELATED DIAGNOSTIC INFORMATION" .

>> GO TO 2.

2. CHECK GROUND TERMINALS

Check ground terminals for corroding or loose connection.
Refer to EC-924, "Ground Inspection" .

OK or NG

OK >> GO TO 3.
NG >> Repair or replace.

3. SEARCH FOR ELECTRICAL INCIDENT

Perform GI-25, "How to Perform Efficient Diagnosis for an Electrical Incident" , “INCIDENT SIMULATION TESTS”.

OK or NG

OK >> **INSPECTION END**
NG >> Repair or replace.

POWER SUPPLY AND GROUND CIRCUIT

PFP:24110

Wiring Diagram

BBS004A4

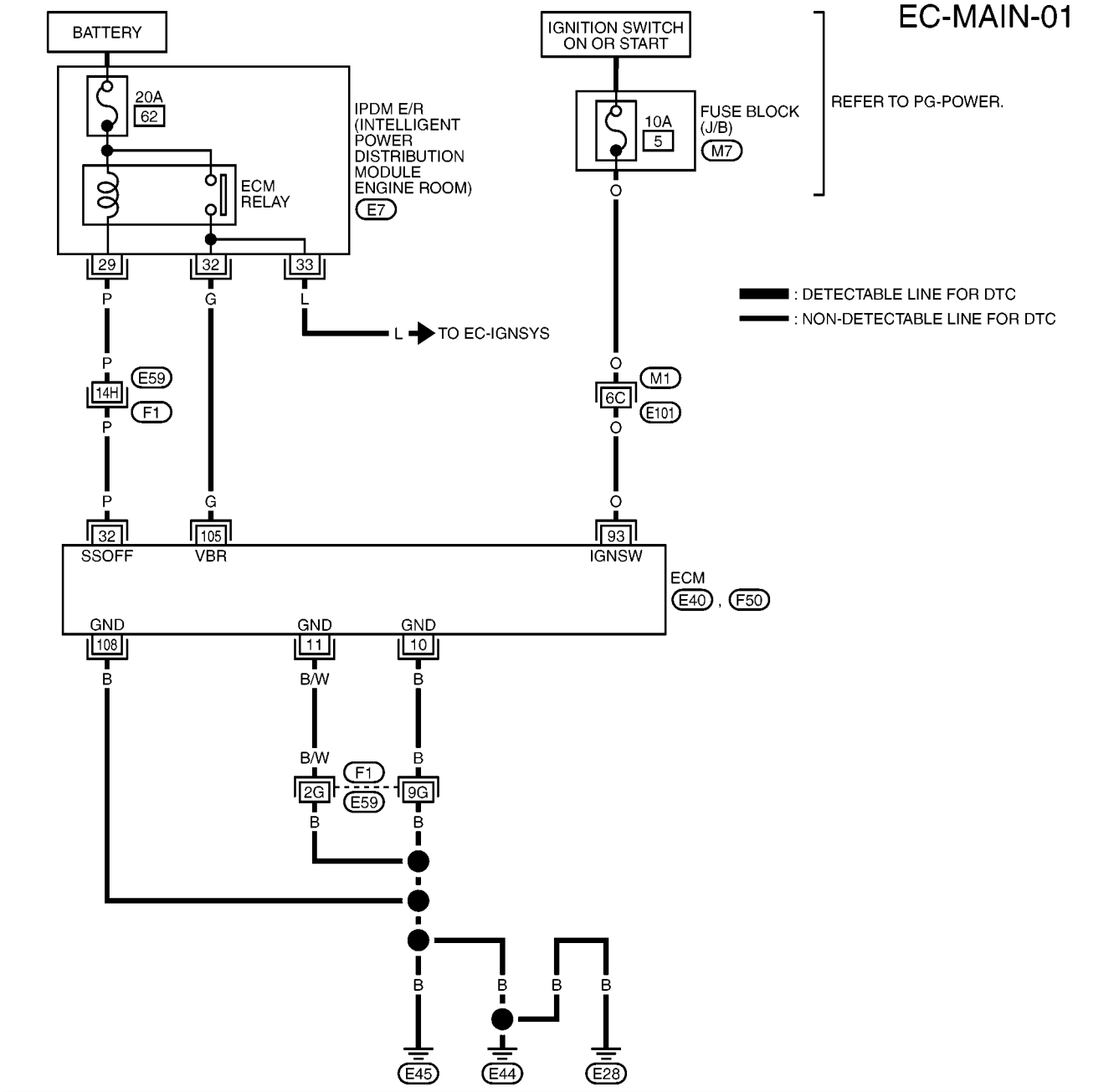

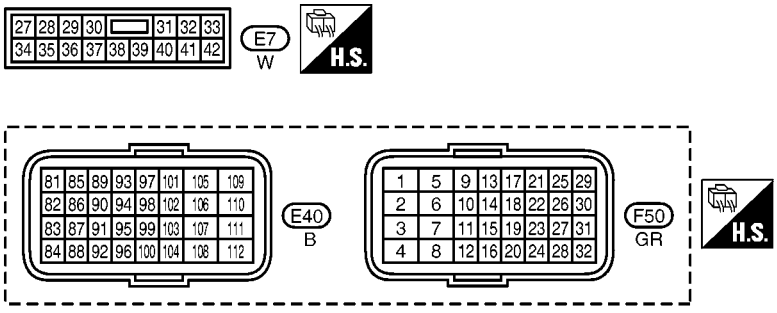

REFER TO THE FOLLOWING.
M1 , F1 - SUPER MULTIPLE JUNCTION (SMJ)
M7 - FUSE BLOCK - JUNCTION BOX (J/B)

MBWA1455E

Specification data are reference values and are measured between each terminal and ground.

CAUTION:
Do not use ECM ground terminals when measuring input/output voltage. Doing so may result in damage to the ECM's transistor. Use a ground other than ECM terminals, such as the ground.

TERMINAL NO.	WIRE COLOR	ITEM	CONDITION	DATA (DC Voltage)
10 11	B B/W	ECM ground	**[Engine is running]** ● Idle speed	Body ground
32	P	ECM relay (Self shut-off)	**[Engine is running]** **[Ignition switch: OFF]** ● For a few seconds after turning ignition switch OFF	0 - 1.0V
			[Ignition switch: OFF] ● More than a few seconds after turning ignition switch OFF	BATTERY VOLTAGE (11 - 14V)
93	O	Ignition switch	**[Ignition switch: OFF]**	0V
			[Ignition switch: ON]	BATTERY VOLTAGE (11 - 14V)
105	G	Power supply for ECM	**[Ignition switch: ON]**	BATTERY VOLTAGE (11 - 14V)
108	B	ECM ground	**[Engine is running]** ● Idle speed	Body ground

Diagnostic Procedure

BBS004A5

1. INSPECTION START

Start engine.
Is engine running?

Yes or No

Yes >> GO TO 8.
No >> GO TO 2.

2. CHECK ECM POWER SUPPLY CIRCUIT-I

1. Turn ignition switch OFF and then ON.
2. Check voltage between ECM terminal 93 and ground with CONSULT-II or tester.

Voltage: Battery voltage

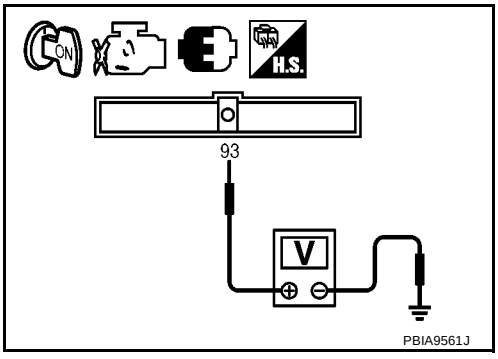

OK or NG

OK >> GO TO 4.
NG >> GO TO 3.

3. DETECT MALFUNCTIONING PART

Check the following.

- Harness connectors M1, E101
- Fuse block (J/B) connector M1.
- 10A fuse
- Harness for open or short between ECM and fuse

>> Repair open circuit or short to ground or short to power in harness or connectors.

4. CHECK GROUND CONNECTIONS-1

1. Turn ignition switch OFF.
2. Loosen and retighten ground screws on the body.
   Refer to EC-924, "Ground Inspection" .

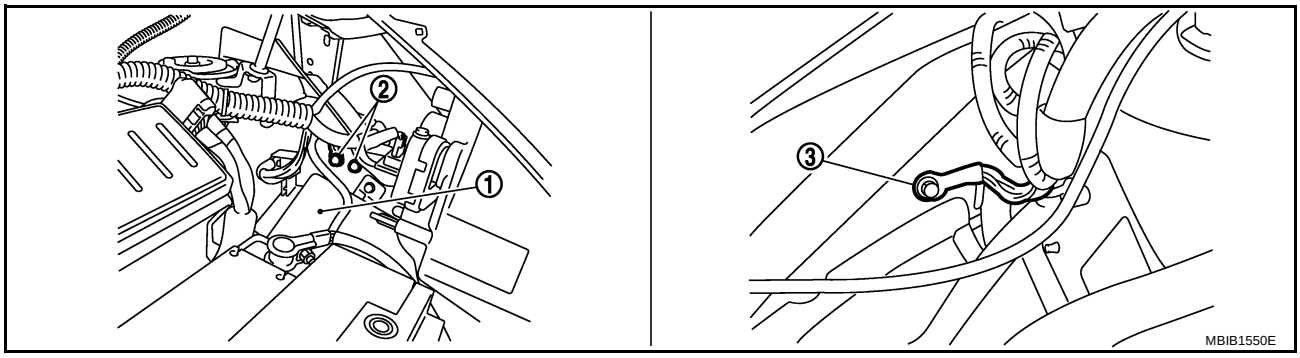

1. IPDM E/R
2. Body ground
3. Body ground

OK or NG

OK >> GO TO 5.
NG >> Repair or replace ground connections.

5. CHECK ECM GROUND CIRCUIT FOR OPEN AND SHORT-I

1. Disconnect ECM harness connector.
2. Check harness continuity between ECM terminals 10, 11, 108 and ground.
   Refer to Wiring Diagram.

   Continuity should exist.

3. Also check harness for short to power.

OK or NG

OK >> GO TO 7.
NG >> GO TO 6.

6. DETECT MALFUNCTIONING PART

Check the following.

- Harness connectors F1, E59
- Harness for open or short between ECM and ground

>> Repair open circuit or short to power in harness or connectors.

7. CHECK ECM POWER SUPPLY CIRCUIT-II

1. Reconnect ECM harness connector.
2. Turn ignition switch ON.
3. Check voltage between IPDM E/R terminal 33 and ground with CONSULT-II or tester.

Voltage: Battery voltage

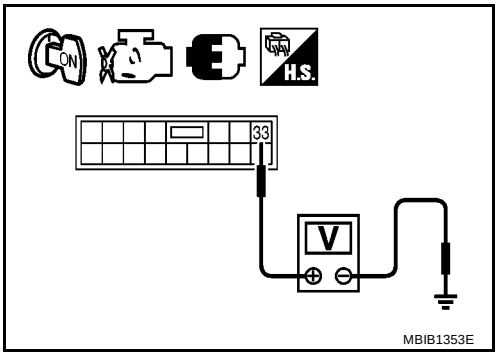

OK or NG

OK >> Go to EC-1221, "IGNITION SIGNAL" .
NG >> GO TO 8.

8. CHECK ECM POWER SUPPLY CIRCUIT-III

1. Turn ignition switch OFF and wait at least 10 seconds.
2. Turn ignition switch ON and then OFF.
3. Check voltage between ECM terminal 105 and ground with CONSULT-II or tester.

Voltage: After turning ignition switch OFF, battery voltage will exist for a few seconds, then drop approximately 0V.

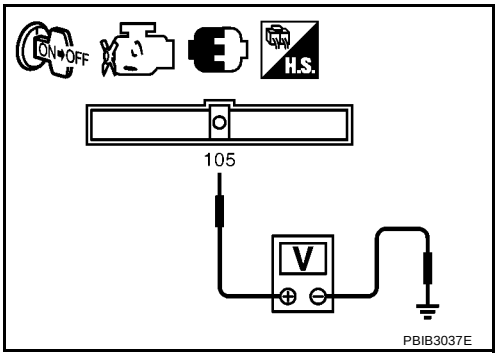

OK or NG

OK >> GO TO 14.
NG (Battery voltage does not exist.)>>GO TO 9.
NG (Battery voltage exists for more than a few seconds.)>>GO TO 11.

9. CHECK ECM POWER SUPPLY CIRCUIT-IV

1. Turn ignition switch OFF and wait at least 10 seconds.
2. Check voltage between ECM terminal 32 and ground with CONSULT-II or tester.

Voltage: Battery voltage

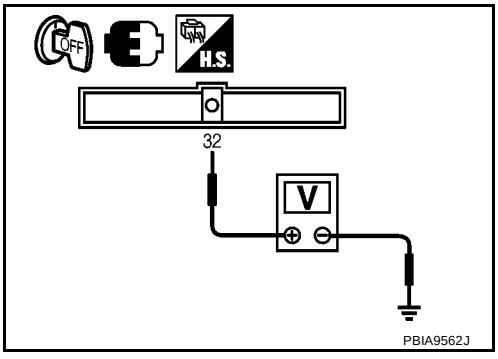

OK or NG

OK >> GO TO 10.
NG >> GO TO 11.

10. CHECK ECM POWER SUPPLY CIRCUIT-V

1. Disconnect ECM harness connector.
2. Disconnect IPDM E/R harness connector E7.
3. Check harness continuity between ECM terminal 105 and IPDM E/R terminal 32.
   Refer to Wiring Diagram.

   Continuity should exist.

4. Also check harness for short to ground and short to power.

OK or NG

OK >> GO TO 17.
NG >> Repair open circuit or short to ground or short to power in harness or connectors.

11. CHECK ECM POWER SUPPLY CIRCUIT-VI

1. Disconnect ECM harness connector.
2. Disconnect IPDM E/R harness connector E7.
3. Check harness continuity between ECM terminal 32 and IPDM E/R terminal 29.
   Refer to Wiring Diagram.

   Continuity should exist.

4. Also check harness for short to ground and short to power.

OK or NG

OK >> GO TO 13.
NG >> GO TO 12.

12. DETECT MALFUNCTIONING PART

Check the following.

- Harness or connectors E59, F1
- Harness for open or short between ECM and IPDM E/R

>> Repair open circuit or short to ground or short to power in harness or connectors.

13. CHECK 20A FUSE

1. Disconnect 20A fuse from IPDM E/R.
2. Check 20A fuse.

OK or NG

OK >> GO TO 17.
NG >> Replace 20A fuse.

14. CHECK GROUND CONNECTIONS-II

1. Loosen and retighten ground screws on the body.
   Refer to EC-924, "Ground Inspection" .

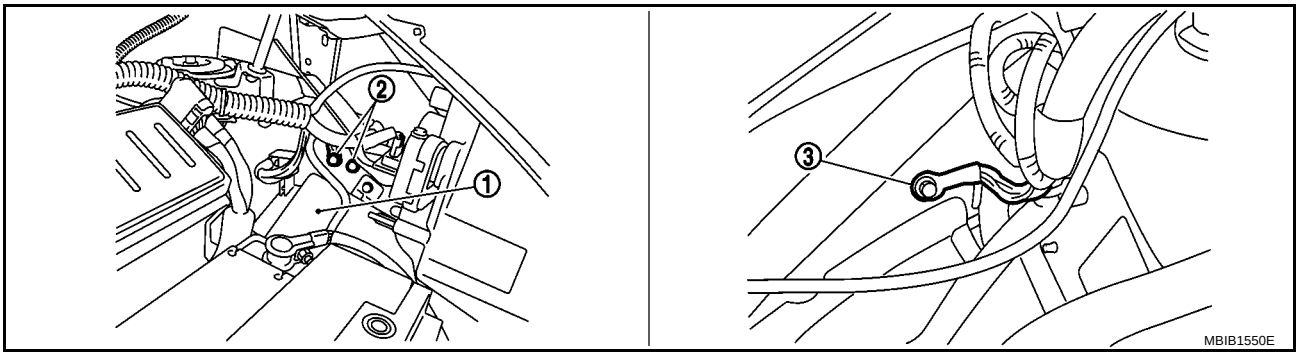

1. IPDM E/R
2. Body ground
3. Body ground

OK or NG

OK >> GO TO 15.
NG >> Repair or replace ground connections.

15. CHECK ECM GROUND CIRCUIT FOR OPEN AND SHORT-II

1. Disconnect ECM harness connector.
2. Check harness continuity between ECM terminals 10, 11, 108 and ground.
   Refer to Wiring Diagram.

   Continuity should exist.

3. Also check harness for short to power.

OK or NG

OK >> GO TO 17.
NG >> GO TO 16.

16. DETECT MALFUNCTIONING PART

Check the following.

- Harness or connectors F1, E59
- Harness for open or short between ECM and ground

>> Repair open circuit or short to power in harness or connectors.

17. CHECK INTERMITTENT INCIDENT

Refer to EC-917, "TROUBLE DIAGNOSIS FOR INTERMITTENT INCIDENT" .

OK or NG

OK >> Replace IPDM E/R. Refer to PG-18, "IPDM E/R (INTELLIGENT POWER DISTRIBUTION MODULE ENGINE ROOM)"
NG >> Repair open circuit or short to power in harness or connectors.

Ground Inspection

BBS004A6

Ground connections are very important to the proper operation of electrical and electronic circuits. Ground connections are often exposed to moisture, dirt and other corrosive elements. The corrosion (rust) can become an unwanted resistance. This unwanted resistance can change the way a circuit works.
Electronically controlled circuits are very sensitive to proper grounding. A loose or corroded ground can drastically affect an electronically controlled circuit. A poor or corroded ground can easily affect the circuit. Even when the ground connection looks clean, there can be a thin film of rust on the surface.
When inspecting a ground connection follow these rules:

- Remove the ground bolt or screw.
- Inspect all mating surfaces for tarnish, dirt, rust, etc.
- Clean as required to assure good contact.
- Reinstall bolt or screw securely.
- Inspect for “add-on” accessories which may be interfering with the ground circuit.
- If several wires are crimped into one ground eyelet terminal, check for proper crimps. Make sure all of the wires are clean, securely fastened and providing a good ground path. If multiple wires are cased in one eyelet make sure no ground wires have excess wire insulation.

For detailed ground distribution information, refer to PG-38, "Ground Distribution" .

Ground Inspection

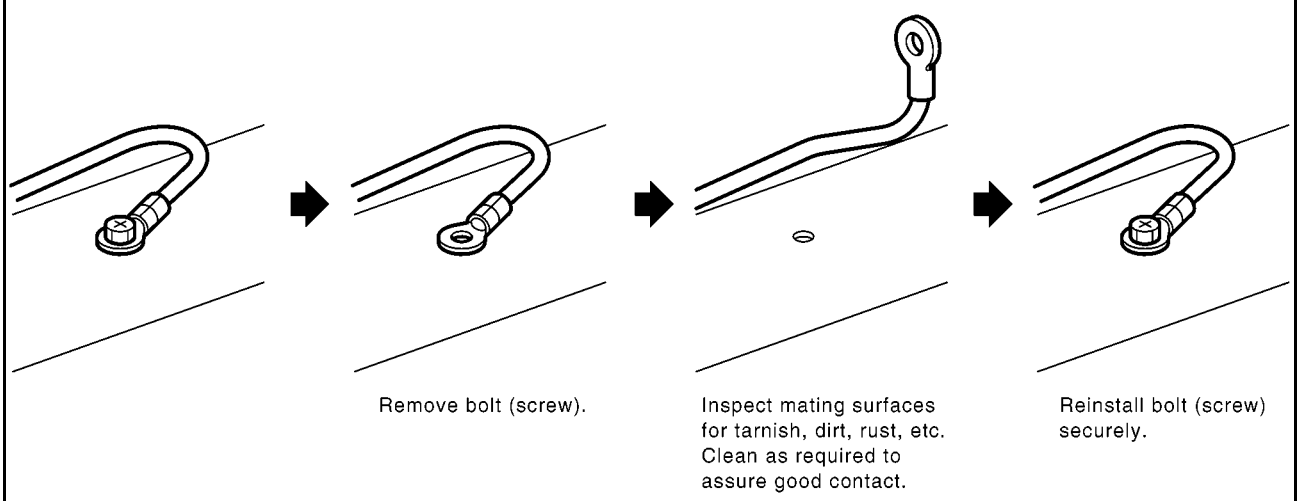

DTC U1000, U1001 CAN COMMUNICATION LINE

PFP:23710

Description

BBS004A7

CAN (Controller Area Network) is a serial communication line for real time application. It is an on-vehicle multiplex communication line with high data communication speed and excellent error detection ability. Many electronic control units are equipped onto a vehicle, and each control unit shares information and links with other control units during operation (not independent). In CAN communication, control units are connected with 2 communication lines (CAN H line, CAN L line) allowing a high rate of information transmission with less wiring. Each control unit transmits/receives data but selectively reads required data only.

On Board Diagnosis Logic

BBS004A8

DTC No.	Trouble diagnosis name	DTC detecting condition	Possible cause
U1000*1 1000*1	CAN communication line	● ECM cannot communicate to other control units. ● ECM cannot communicate for more than the specified time.	● Harness or connectors (CAN communication line is open or shorted.)
U1001*2 1001*2			

*1: **This self-diagnosis has the one trip detection logic.**
*2: **The MI will not light up for this self-diagnosis.**

DTC Confirmation Procedure

BBS004A9

1. Turn ignition switch ON and wait at least 3 seconds.
2. Select “DATA MONITOR” mode with CONSULT-II.
3. If 1st trip DTC is detected, go to EC-927, "Diagnostic Procedure" .

Wiring Diagram

BBS004AA

EC-CAN-01

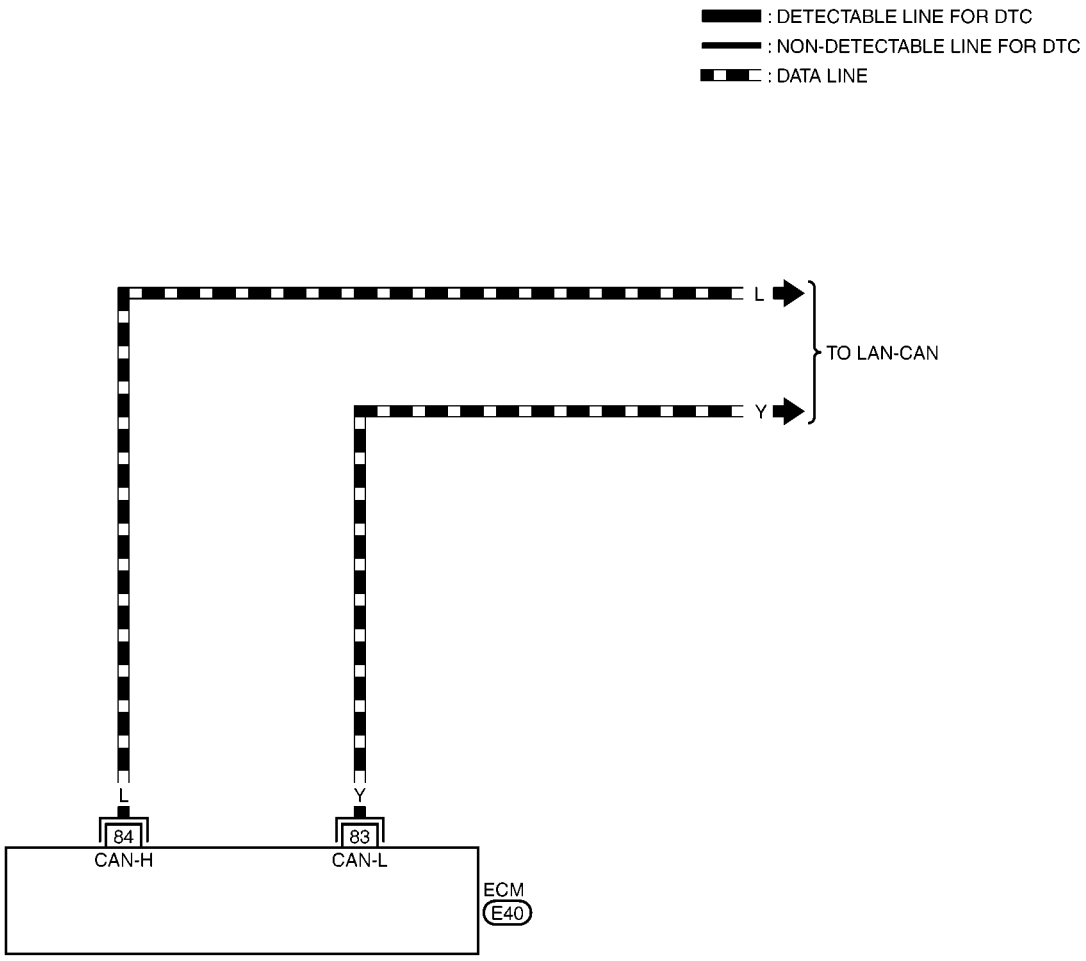

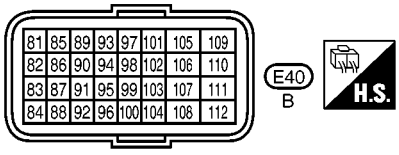

MBWA1456E

Diagnostic Procedure

BBS004AB

Go to LAN-3, "Precautions When Using CONSULT-II" .

DTC U1010 CAN COMMUNICATION

PFP:23710

Description

BBS004AC

CAN (Controller Area Network) is a serial communication line for real time application. It is an on-vehicle multiplex communication line with high data communication speed and excellent error detection ability. Many electronic control units are equipped onto a vehicle, and each control unit shares information and links with other control units during operation (not independent). In CAN communication, control units are connected with 2 communication lines (CAN H line, CAN L line) allowing a high rate of information transmission with less wiring. Each control unit transmits/receives data but selectively reads required data only.

On Board Diagnosis Logic

BBS004AD

This self-diagnosis has the one trip detection logic (A/T).
The MI will not light up for this self-diagnosis (M/T).

DTC No.	Trouble diagnosis name	DTC detecting condition	Possible cause
U1010 1010	CAN communication bus	Initializing CAN communication bus is malfunctioning.	● ECM

DTC Confirmation Procedure

BBS004AE

WITH CONSULT-II

1. Turn ignition switch ON.
2. Select “DATA MONITOR” mode with CONSULT-II.
3. If 1st trip DTC is detected, go to EC-929, "Diagnostic Procedure"
.

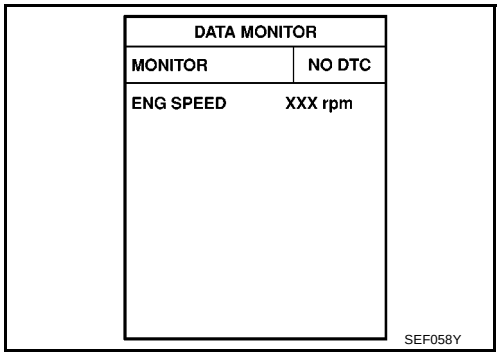

WITH GST

Follow the procedure “WITH CONSULT-II” above.

Diagnostic Procedure

BBS004AF

1. INSPECTION START

With CONSULT-II

1. Turn ignition switch ON.
2. Select “SELF-DIAG RESULTS” mode with CONSULT-II.
3. Touch “ERASE”.
4. **Perform DTC Confirmation Procedure.**
   See EC-928, "DTC Confirmation Procedure" .
5. Is the 1st trip DTC U1010 displayed again?

With GST

1. Turn ignition switch ON.
2. Select Service $04 with GST.
3. **Perform DTC Confirmation Procedure.**
   See EC-928, "DTC Confirmation Procedure" .
4. Is the 1st trip DTC U1010 displayed again?

Yes or No

Yes >> GO TO 2.
No >> **INSPECTION END**

2. REPLACE ECM

1. Replace ECM.
2. Perform initialization of NATS system and registration of all NATS ignition key IDs. Refer to BL-218, "ECM Re-communicating Function" .
3. Perform EC-857, "Accelerator Pedal Released Position Learning" .
4. Perform EC-857, "Throttle Valve Closed Position Learning" .
5. Perform EC-858, "Idle Air Volume Learning" .

>> **INSPECTION END**

DTC P0011 IVT CONTROL

PFP:23796

Description

BBS004AG

SYSTEM DESCRIPTION

Sensor	Input signal to ECM	ECM function	Actuator
Crankshaft position sensor (POS) Camshaft position sensor (PHASE)	Engine speed and piston position	Intake valve timing control	Intake valve timing control solenoid valve
Engine coolant temperature sensor	Engine coolant temperature		
Wheel sensor	Vehicle speed*		

*: This signal is sent to the ECM through CAN communication line.

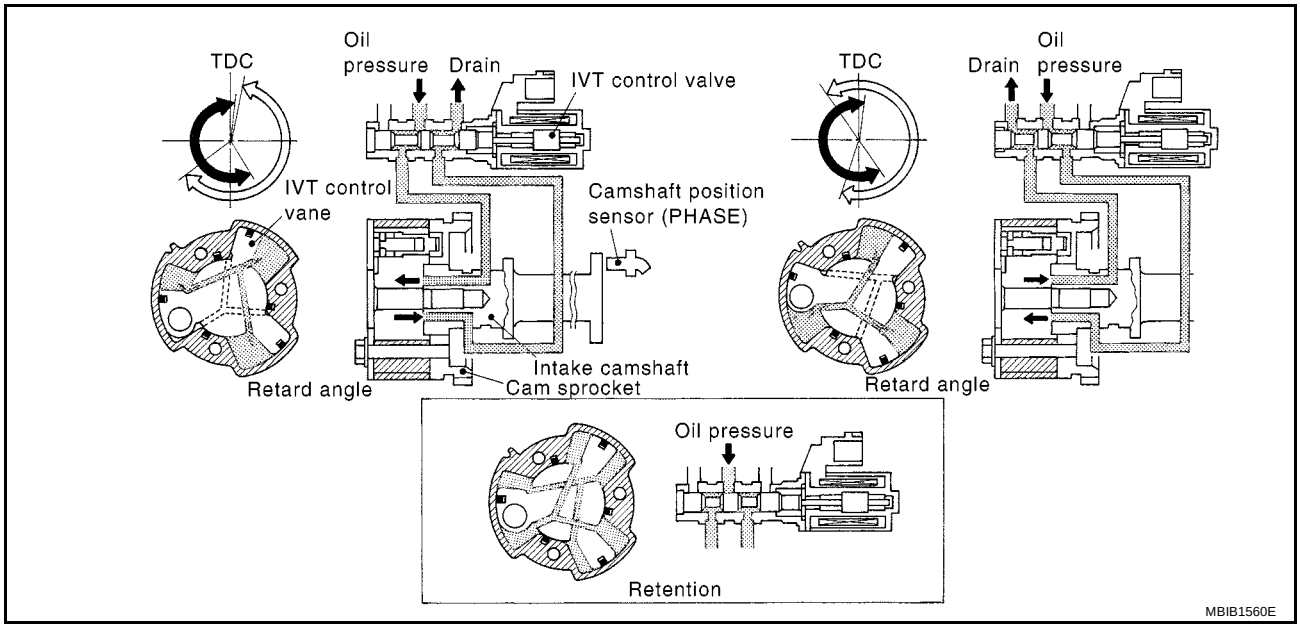

This mechanism hydraulically controls cam phases continuously with the fixed operating angle of the intake valve.

The ECM receives signals such as crankshaft position, camshaft position, engine speed, and engine coolant temperature. Then, the ECM sends ON/OFF pulse duty signals to the intake valve timing control solenoid valve depending on driving status. This makes it possible to control the shut/open timing of the intake valve to increase engine torque in low/mid speed range and output in high-speed range.

CONSULT-II Reference Value in Data Monitor Mode

BBS004AH

Specification data are reference values.

MONITOR ITEM	CONDITION		SPECIFICATION
INT/V TIM (B1)	● Engine: After warming up ● Air conditioner switch: OFF ● Shift lever: P or N (A/T), Neutral (M/T) ● No load	Idle	–5° - 5°CA
		2,500 rpm	Approx. 0° - 40°CA
INT/V SOL (B1)	● Engine: After warming up ● Air conditioner switch: OFF ● Shift lever: P or N (A/T), Neutral (M/T) ● No load	Idle	0% - 2%
		2,500 rpm	Approx. 0% - 90%

On Board Diagnosis Logic

BBS004AI

The MI will not light up for these self-diagnoses.

DTC No.	Trouble diagnosis name	Detecting condition	Possible cause
P0011 0011	Intake valve timing control performance	There is a gap between angle of target and phase-control angle degree.	● Crankshaft position sensor (POS) ● Camshaft position sensor (PHASE) ● Intake valve timing control solenoid valve ● Accumulation of debris to the signal pick-up portion of the camshaft ● Timing chain installation ● Foreign matter caught in the oil groove for intake valve timing control

FAIL-SAFE MODE

ECM enters in fail-safe mode when the malfunction is detected.

Detected items	Engine operating condition in fail-safe mode
Intake valve timing control	The signal is not energized to the solenoid valve and the valve control does not function

DTC Confirmation Procedure

BBS004AJ

CAUTION:
Always drive at a safe speed.

NOTE:

- **If DTC P0011 is displayed with DTC P1111, first perform trouble diagnosis for DTC P1111. See EC-1077, "DTC P1111 IVT CONTROL SOLENOID VALVE" .**
- If DTC Confirmation Procedure has been previously conducted, always turn ignition switch OFF and wait at least 10 seconds before conducting the next test.

TESTING CONDITION:
Before performing the following procedure, confirm that battery voltage is between 10V and 16V at idle.

WITH CONSULT-II

1. Turn ignition switch ON and select “DATA MONITOR” mode with CONSULT-II.
2. Start engine and warm it up to the normal operating temperature.
3. Maintain the following conditions for at least 6 consecutive seconds.
   Hold the accelerator pedal as steady as possible.

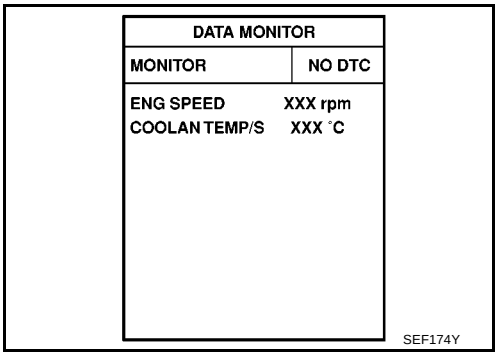

ENG SPEED	1,200 - 2,000 rpm (A constant rotation is maintained.)
COOLAN TEMP/S	60 - 120°C (140 - 248°F)
B/FUEL SCHDL	More than 3.5 msec
Shift lever	A/T: P or N position M/T: Neutral position

4. Let engine idle for 10 seconds.
5. If the 1st trip DTC is detected, go to EC-932, "Diagnostic Procedure" .
   If the 1st trip DTC is not detected, go to next step.
6. Maintain the following conditions for at least 20 consecutive seconds.

ENG SPEED	1,700 - 3,175 rpm (A constant rotation is maintained.)
COOLAN TEMP/S	70 - 105°C (158 - 221°F)

Shift lever	1st or 2nd position
Driving location uphill	Driving vehicle uphill (Increased engine load will help maintain the driving conditions required for this test.)

7. If 1st trip DTC is detected, go to EC-932, "Diagnostic Procedure" .

WITH GST

Follow the procedure “WITH CONSULT-II” above.

Diagnostic Procedure

BBS004AK

1. CHECK OIL PRESSURE WARNING LAMP

1. Start engine.
2. Check oil pressure warning lamp and confirm it is not illuminated.

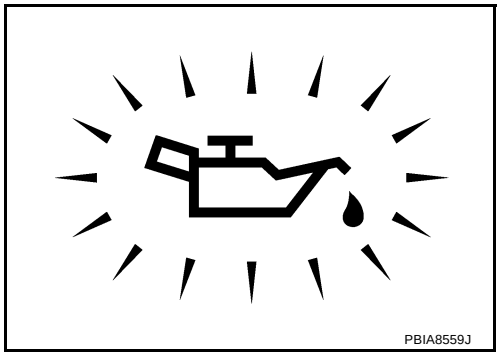

OK or NG

OK >> GO TO 2.
KG >> Go to LU-16, "OIL PRESSURE CHECK" .

2. CHECK INTAKE VALVE TIMING CONTROL SOLENOID VALVE

Refer to EC-933, "Component Inspection" .

OK or NG

OK >> GO TO 3.
NG >> Replace intake valve timing control solenoid valve.

3. CHECK CRANKSHAFT POSITION SENSOR (POS)

Refer to EC-1048, "Component Inspection" .

OK or NG

OK >> GO TO 4.
NG >> Replace crankshaft position sensor (POS).

4. CHECK CAMSHAFT POSITION SENSOR (PHASE)

Refer to EC-1054, "Component Inspection" .

OK or NG

OK >> GO TO 5.
NG >> Replace camshaft position sensor (PHASE).

5. CHECK CAMSHAFT (INTAKE)

Check the following.

- Accumulation of debris to the signal plate of camshaft (1) rear end
- Chipping signal plate of camshaft rear end

OK or NG

OK >> GO TO 6.
NG >> Remove debris and clean the signal plate of camshaft rear end or replace camshaft.

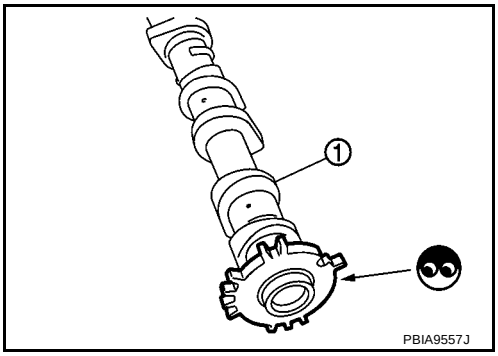

6. CHECK TIMING CHAIN INSTALLATION

Check service records for any recent repairs that may cause timing chain misaligned.
Are there any service records that may cause timing chain misaligned?

Yes or No

Yes >> Check timing chain installation. Refer to EM-142, "TIMING CHAIN" .
No >> GO TO 7.

7. CHECK LUBRICATION CIRCUIT

Refer to EM-166, "Inspection of Camshaft Sprocket (INT) Oil Groove" .

OK or NG

OK >> GO TO 8.
NG >> Clean lubrication line.

8. CHECK INTERMITTENT INCIDENT

Refer to EC-917, "TROUBLE DIAGNOSIS FOR INTERMITTENT INCIDENT" .
For Wiring Diagram, refer to EC-1044, "Wiring Diagram" for CKP sensor (POS) and EC-1051, "Wiring Diagram" for CMP sensor (PHASE).

>> **INSPECTION END**

Component Inspection

BBS004AL

INTAKE VALVE TIMING CONTROL SOLENOID VALVE

1. Disconnect intake valve timing control solenoid valve harness connector.
2. Check resistance between intake valve timing control solenoid valve as follows.

Terminal	Resistance
1 and 2	6.7 - 7.7Ω [at 20°C (68°F)]
1 or 2 and ground	∞Ω (Continuity should not exist.)

If NG, replace intake valve timing control solenoid valve.
If OK, go to next step.

3. Remove intake valve timing control solenoid valve.

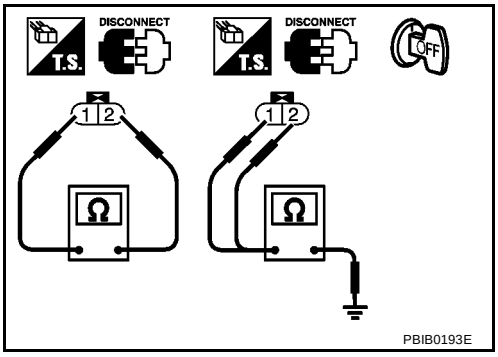

4. Provide 12V DC between intake valve timing control solenoid valve terminals and then interrupt it. Make sure that the plunger moves as shown in the figure.

   CAUTION:
   Do not apply 12V DC continuously for 5 seconds or more. Doing so may result in damage to the coil in intake valve timing control solenoid valve.
   If NG, replace intake valve timing control solenoid valve.

   NOTE:
   Always replace O-ring when intake valve timing control solenoid valve is removed.

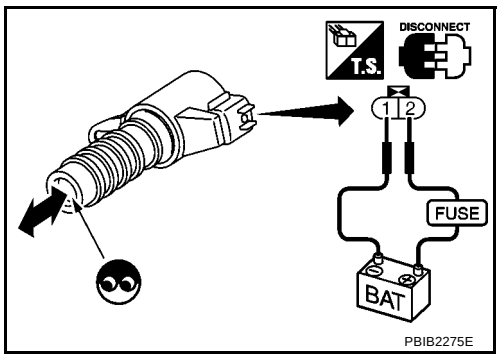

BBS004AM

Removal and Installation

INTAKE VALVE TIMING CONTROL SOLENOID VALVE

Refer to EM-142, "TIMING CHAIN" .

DTC P0102, P0103 MAF SENSOR

PFP:22680

Component Description

BBS004AN

The mass air flow sensor (1) is placed in the stream of intake air. It measures the intake flow rate by measuring a part of the entire intake flow. The mass air flow sensor controls the temperature of the hot wire to a certain amount. The heat generated by the hot wire is reduced as the intake air flows around it. The more air, the greater the heat loss.
Therefore, the electric current supplied to hot wire is changed to maintain the temperature of the hot wire as air flow increases. The ECM detects the air flow by means of this current change.

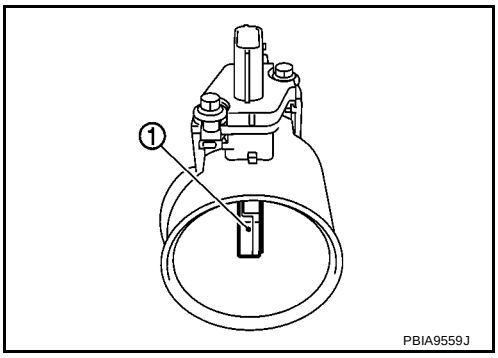

CONSULT-II Reference Value in Data Monitor Mode

BBS004AO

Specification data are reference values.

MONITOR ITEM	CONDITION		SPECIFICATION
MAS A/F SE-B1	See EC-907, "TROUBLE DIAGNOSIS - SPECIFICATION VALUE" .		
CAL/LD VALUE	● Engine: After warming up ● Shift lever: P or N (A/T), Neutral (M/T) ● Air conditioner switch: OFF ● No load	Idle	10% - 35%
		2,500 rpm	10% - 35%
MASS AIRFLOW	● Engine: After warming up ● Shift lever: P or N (A/T), Neutral (M/T) ● Air conditioner switch: OFF ● No load	Idle	1.0 - 4.0 g·m/s
		2,500 rpm	2.0 - 10.0 g·m/s

On Board Diagnosis Logic

BBS004AP

These self-diagnoses have the one trip detection logic.

DTC No.	Trouble diagnosis name	DTC detecting condition	Possible cause
P0102 0102	Mass air flow sensor circuit low input	An excessively low voltage from the sensor is sent to ECM.	● Harness or connectors (The sensor circuit is open or shorted.) ● Intake air leaks ● Mass air flow sensor
P0103 0103	Mass air flow sensor circuit high input	An excessively high voltage from the sensor is sent to ECM.	● Harness or connectors (The sensor circuit is open or shorted.) ● Mass air flow sensor

FAIL-SAFE MODE

When the malfunction is detected, the ECM enters fail-safe mode and the MI lights up.

Detected items	Engine operating condition in fail-safe mode
Mass air flow sensor circuit	Engine speed will not rise more than 2,400 rpm due to the fuel cut.

DTC Confirmation Procedure

BBS004AQ

NOTE:
If DTC Confirmation Procedure has been previously conducted, always turn ignition switch OFF and wait at least 10 seconds before conducting the next test.

PROCEDURE FOR DTC P0102

With CONSULT-II

1. Turn ignition switch ON.
2. Select “DATA MONITOR” mode with CONSULT-II.
3. Start engine and wait at least 5 seconds.
4. If DTC is detected, go to EC-938, "Diagnostic Procedure" .

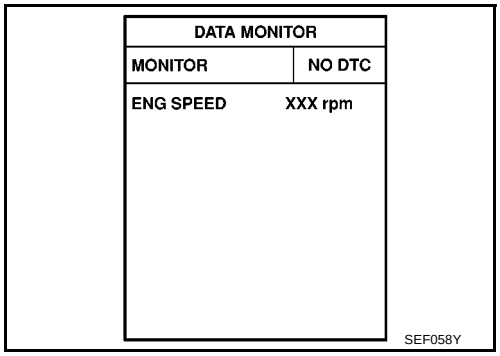

With GST

Follow the procedure “With CONSULT-II” above.

PROCEDURE FOR DTC P0103

With CONSULT-II

1. Turn ignition switch ON.
2. Select “DATA MONITOR” mode with CONSULT-II.
3. Wait at least 5 seconds.
4. If DTC is detected, go to EC-938, "Diagnostic Procedure" .
   If DTC is not detected, go to next step.
5. Start engine and wait at least 5 seconds.
6. If DTC is detected, go to EC-938, "Diagnostic Procedure" .

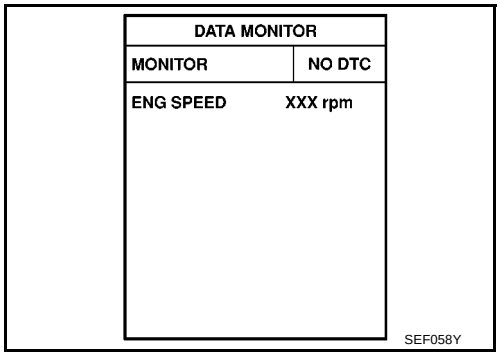

With GST

Follow the procedure “With CONSULT-II” above.

Wiring Diagram

BBS004AR

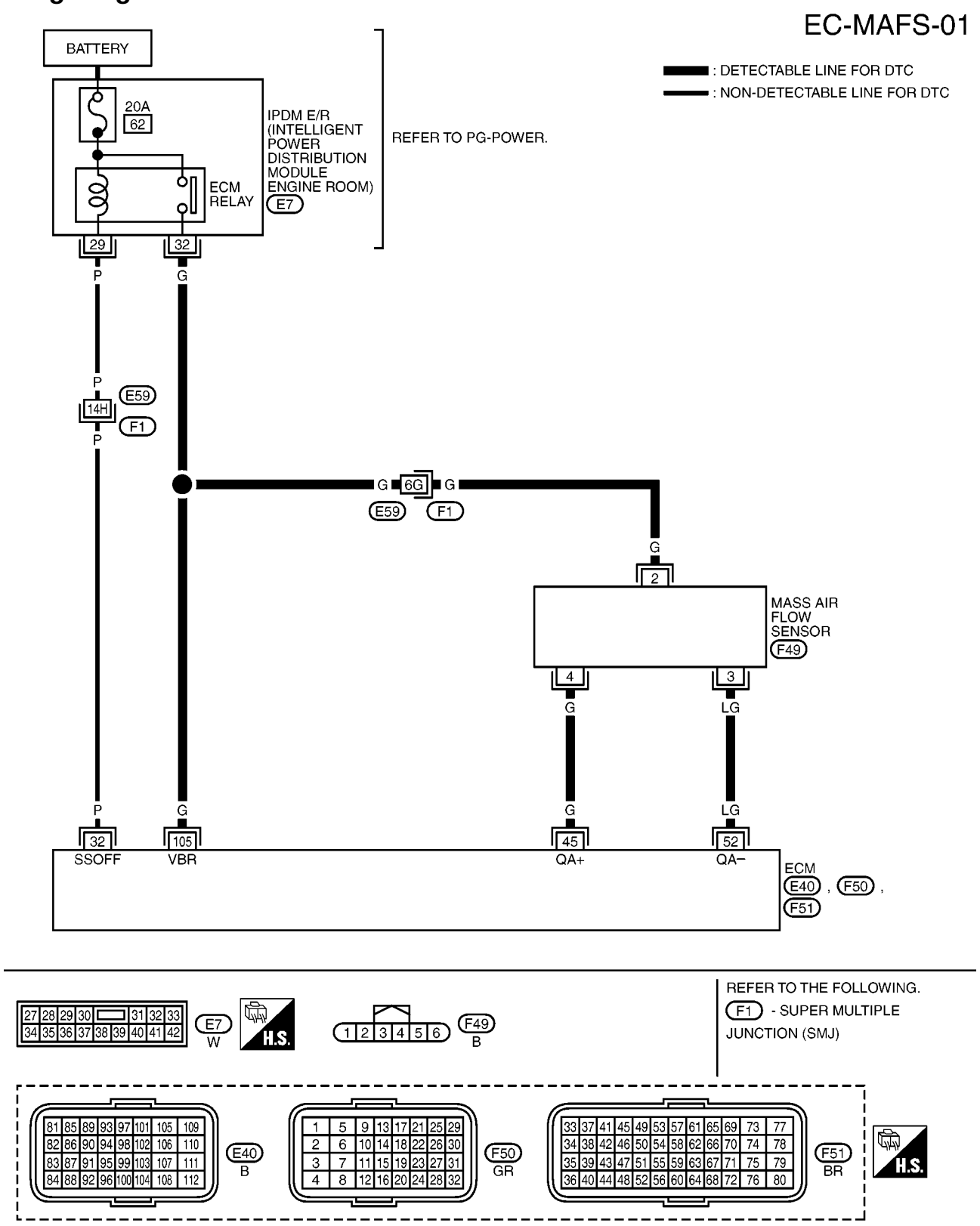

Specification data are reference values and are measured between each terminal and ground.

CAUTION:

Do not use ECM ground terminals when measuring input/output voltage. Doing so may result in damage to the ECM's transistor. Use a ground other than ECM terminals, such as the ground.

TERMINAL NO.	WIRE COLOR	ITEM	CONDITION	DATA (DC Voltage)
32	P	ECM relay (Self shut-off)	**[Engine is running]** **[Ignition switch: OFF]** ● For a few seconds after turning ignition switch OFF	0 - 1.0V
			[Ignition switch: OFF] ● More than a few seconds after turning ignition switch OFF	BATTERY VOLTAGE (11 - 14V)
45	G	Mass air flow sensor	**[Ignition switch: ON]** ● Engine stopped	Approximately 0.4V
			[Engine is running] ● **Warm-up condition** ● Idle speed	1.0 - 1.3V
			[Engine is running] ● **Warm-up condition** ● Engine is revving from idle to about 4,000 rpm	1.0 - 1.3 to Approximately 2.4V (Check for linear voltage rise in response to engine being increased to about 4,000 rpm.)
52	LG	Sensor ground (Mass air flow sensor)	**[Engine is running]** ● **Warm-up condition** ● Idle speed	Approximately 0V
105	G	Power supply for ECM	**[Ignition switch: ON]**	BATTERY VOLTAGE (11 - 14V)

Diagnostic Procedure

BBS004AS

1. INSPECTION START

Which malfunction (P0102 or P0103) is duplicated?

P0102 or P0103

P0102 >> GO TO 2.
P0103 >> GO TO 3.

2. CHECK INTAKE SYSTEM

Check the following for connection.

- Air duct
- Vacuum hoses
- Intake air passage between air duct to intake manifold

OK or NG

OK >> GO TO 3.
NG >> Reconnect the parts.

3. CHECK GROUND CONNECTIONS

1. Turn ignition switch OFF.
2. Loosen and retighten ground screws on the body.
   Refer to EC-924, "Ground Inspection" .

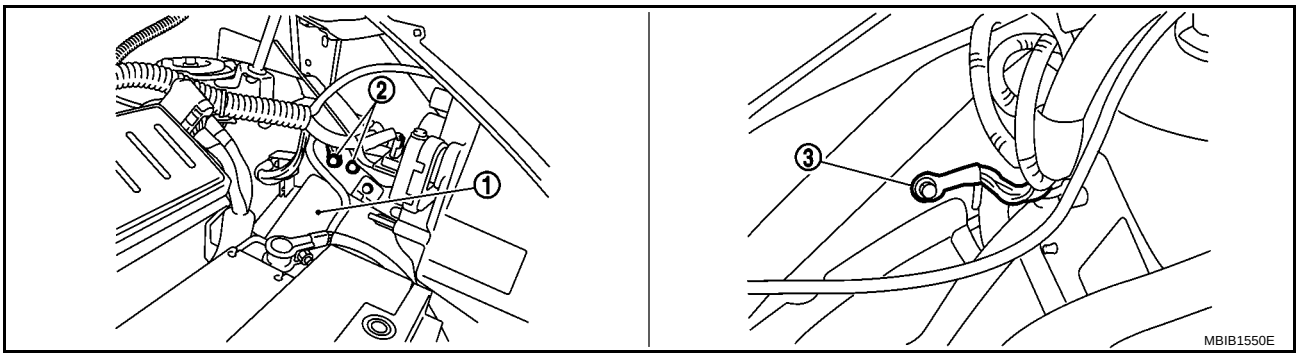

1. IPDM E/R
2. Body ground
3. Body ground

OK or NG

OK >> GO TO 4.
NG >> Repair or replace ground connections.

4. CHECK MAF SENSOR POWER SUPPLY CIRCUIT

1. Disconnect mass air flow (MAF) sensor (1) harness connector.
2. Turn ignition switch ON.

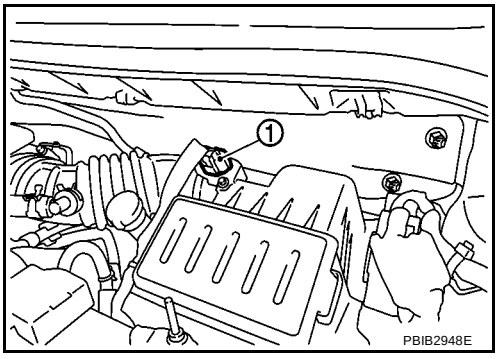

3. Check voltage between MAF sensor terminal 2 and ground with CONSULT-II or tester.

   Voltage: Battery voltage

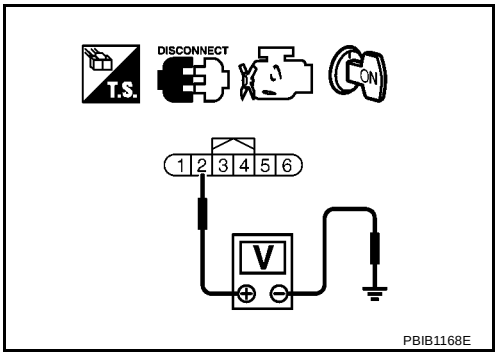

OK or NG

OK >> GO TO 6.
NG >> GO TO 5.

5. DETECT MALFUNCTIONING PART

Check the following.

- Harness connectors E59, F1
- Harness for open or short between mass air flow sensor and ECM
- Harness for open or short between mass air flow sensor and IPDM E/R

>> Repair open circuit or short to ground or short to power in harness or connectors.

6. CHECK MAF SENSOR GROUND CIRCUIT FOR OPEN AND SHORT

1. Turn ignition switch OFF.
2. Disconnect ECM harness connector.
3. Check harness continuity between MAF sensor terminal 3 and ECM terminal 52.
   Refer to Wiring Diagram.

   Continuity should exist.

4. Also check harness for short to ground and short to power.

OK or NG

OK >> GO TO 7.
NG >> Repair open circuit or short to ground or short to power in harness or connectors.

7. CHECK MAF SENSOR INPUT SIGNAL CIRCUIT FOR OPEN AND SHORT

1. Check harness continuity between MAF sensor terminal 4 and ECM terminal 45.
   Refer to Wiring Diagram.

   Continuity should exist.

2. Also check harness for short to ground and short to power.

OK or NG

OK >> GO TO 8.
NG >> Repair open circuit or short to ground or short to power in harness or connectors.

8. CHECK MASS AIR FLOW SENSOR

Refer to EC-940, "Component Inspection" .

OK or NG

OK >> GO TO 9.
NG >> Replace mass air flow sensor.

9. CHECK INTERMITTENT INCIDENT

Refer to EC-917, "TROUBLE DIAGNOSIS FOR INTERMITTENT INCIDENT" .

>> **INSPECTION END**

Component Inspection

BBS004AT

MASS AIR FLOW SENSOR

With CONSULT-II

1. Reconnect all harness connectors disconnected.
2. Start engine and warm it up to normal operating temperature.
3. Connect CONSULT-II and select “DATA MONITOR” mode.
4. Select “MAS A/F SE-B1” and check indication under the following conditions.

Condition	MAS A/F SE-B1 (V)
Ignition switch ON (Engine stopped.)	Approx. 0.4
Idle (Engine is warmed-up to normal operating temperature.)	1.0 - 1.3
Idle to about 4,000 rpm	1.0 - 1.3 to Approx. 2.4*

*: Check for linear voltage rise in response to engine being increased to about 4,000 rpm.

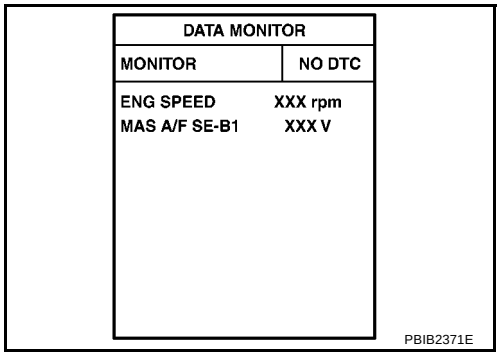

5. If the voltage is out of specification, proceed the following.

a. Check for the cause of uneven air flow through mass air flow sensor. Refer to following.

- Crushed air ducts
- Malfunctioning seal of air cleaner element
- Uneven dirt of air cleaner element
- Improper specification of intake air system parts

b. If NG, repair or replace malfunctioning part and perform step 2 to 4 again.
If OK, go to next step.

6. Turn ignition switch OFF.
7. Disconnect mass air flow sensor harness connector and reconnect it again.
8. Perform step 2 to 4 again.
9. If NG, clean or replace mass air flow sensor.

Without CONSULT-II

1. Reconnect all harness connectors disconnected.
2. Start engine and warm it up to normal operating temperature.
3. Check voltage between ECM terminal 45 (Mass air flow sensor signal) and ground.

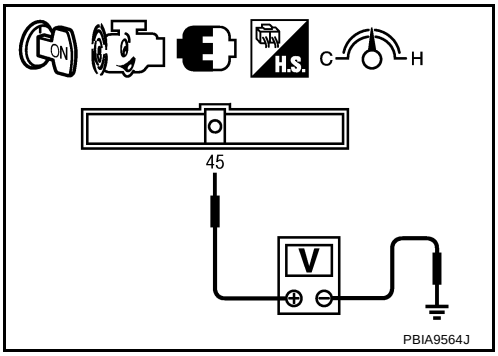

Condition	Voltage V
Ignition switch ON (Engine stopped.)	Approx. 0.4
Idle (Engine is warmed-up to normal operating temperature.)	1.0 - 1.3
Idle to about 4,000 rpm	1.0 - 1.3 to Approx. 2.4*

*: Check for linear voltage rise in response to engine being increased to about 4,000 rpm.

4. If the voltage is out of specification, proceed the following.

a. Check for the cause of uneven air flow through mass air flow sensor. Refer to following.

- Crushed air ducts
- Malfunctioning seal of air cleaner element
- Uneven dirt of air cleaner element
- Improper specification of intake air system parts

b. If NG, repair or replace malfunctioning part and perform step 2 to 3 again.
If OK, go to next step.

5. Turn ignition switch OFF.
6. Disconnect mass air flow sensor harness connector and reconnect it again.
7. Perform step 2 and 3 again.
8. If NG, clean or replace mass air flow sensor.

Removal and Installation

BBS004AU

MASS AIR FLOW SENSOR

Refer to EM-118, "AIR CLEANER AND AIR DUCT" .

DTC P0112, P0113 IAT SENSOR

PFP:22630

Component Description

BBS004AV

The intake air temperature sensor is built-into mass air flow sensor (1). The sensor detects intake air temperature and transmits a signal to the ECM.
The temperature sensing unit uses a thermistor which is sensitive to the change in temperature. Electrical resistance of the thermistor decreases in response to the temperature rise.

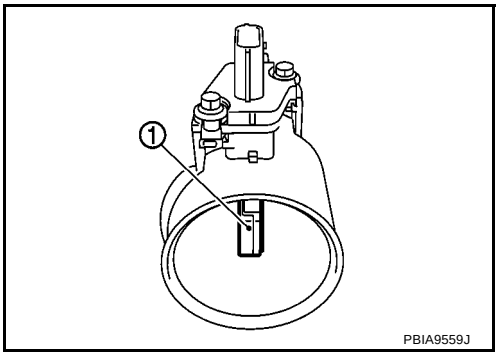

<Reference data>

Intake air temperature °C (°F)	Voltage* V	Resistance kΩ
25 (77)	3.3	1.800 - 2.200
80 (176)	1.2	0.283 - 0.359

*: This data is reference value and is measured between ECM terminal 46 (Intake air temperature sensor) and ground.

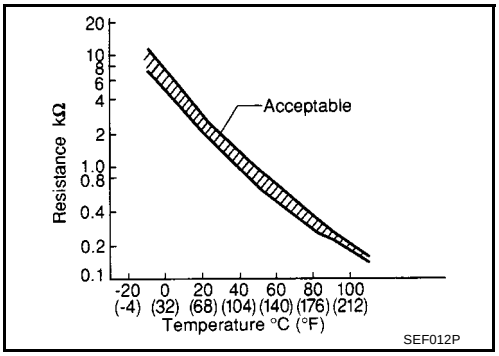

CAUTION:
Do not use ECM ground terminals when measuring input/output voltage. Doing so may result in damage to the ECM's transistor. Use a ground other than ECM terminals, such as the ground.

On Board Diagnosis Logic

BBS004AW

DTC No.	Trouble diagnosis name	DTC detecting condition	Possible cause
P0112 0112	Intake air temperature sensor circuit low input	An excessively low voltage from the sensor is sent to ECM.	● Harness or connectors (The sensor circuit is open or shorted.) ● Intake air temperature sensor
P0113 0113	Intake air temperature sensor circuit high input	An excessively high voltage from the sensor is sent to ECM.	

DTC Confirmation Procedure

BBS004AX

NOTE:
If DTC Confirmation Procedure has been previously conducted, always turn ignition switch OFF and wait at least 10 seconds before conducting the next test.

WITH CONSULT-II

1. Turn ignition switch ON.
2. Select “DATA MONITOR” mode with CONSULT-II.
3. Wait at least 5 seconds.
4. If 1st trip DTC is detected, go to EC-945, "Diagnostic Procedure"
.

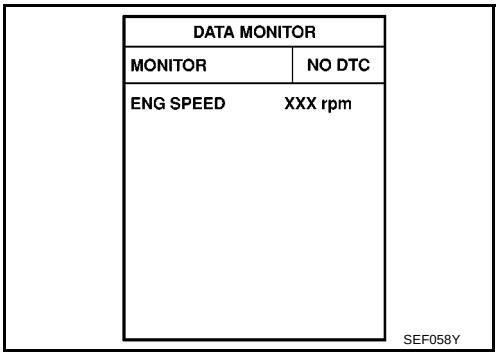

WITH GST

Follow the procedure “WITH CONSULT-II” above.

Wiring Diagram

BBS004AY

EC-IATS-01

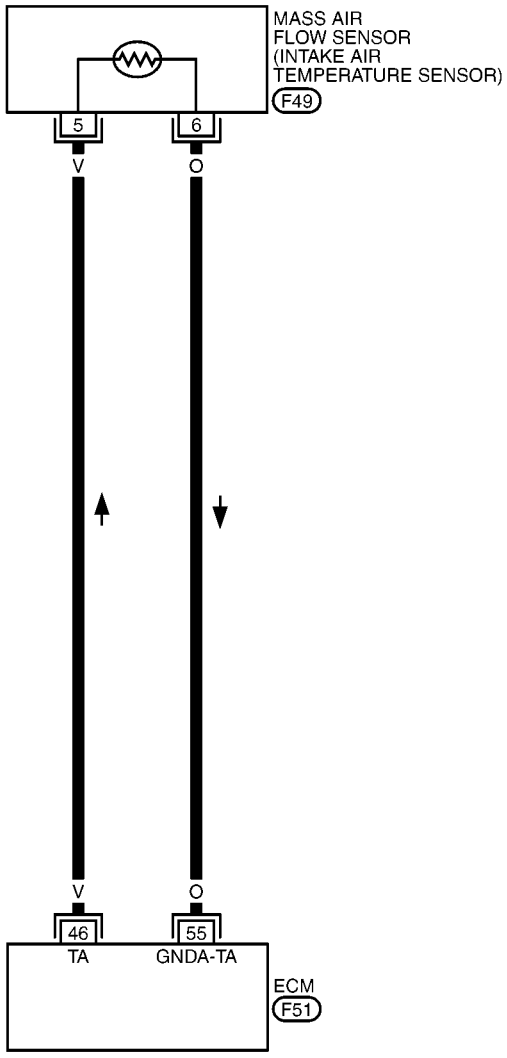

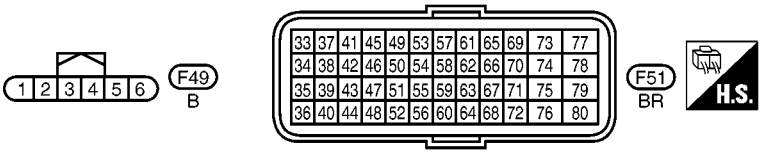

MBWA1458E

Diagnostic Procedure

BBS004AZ

1. CHECK GROUND CONNECTIONS

1. Turn ignition switch OFF.
2. Loosen and retighten ground screws on the body.
   Refer to EC-924, "Ground Inspection" .

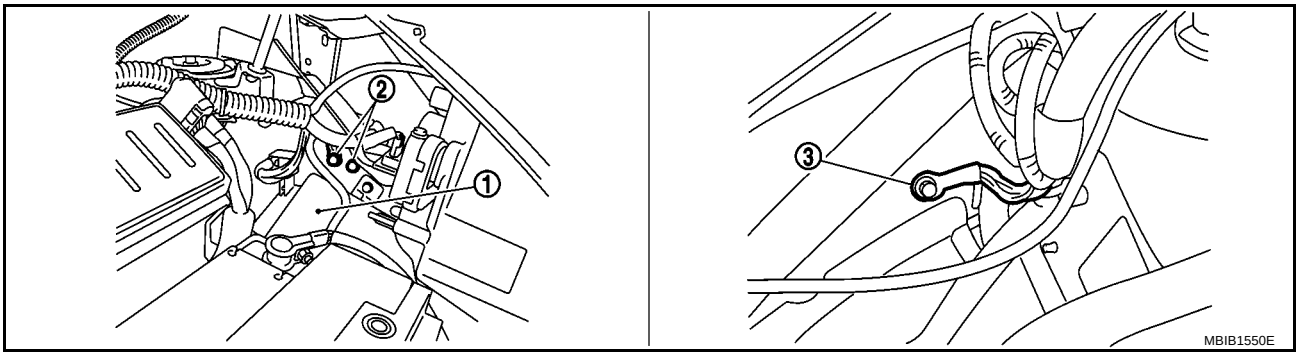

1. IPDM E/R
2. Body ground
3. Body ground

OK or NG

OK >> GO TO 2.
NG >> Repair or replace ground connections.

2. CHECK INTAKE AIR TEMPERATURE SENSOR POWER SUPPLY CIRCUIT

1. Disconnect mass air flow sensor (intake air temperature sensor is built-into) (1) harness connector.
2. Turn ignition switch ON.

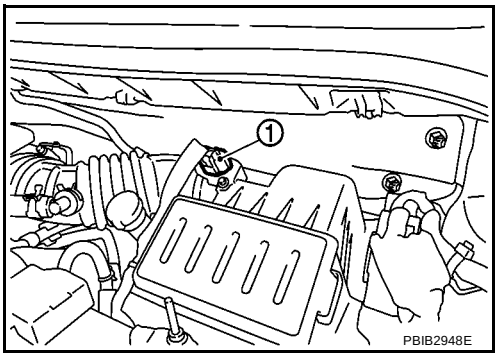

3. Check voltage between mass air flow sensor terminal 5 and ground with CONSULT-II or tester.

   Voltage: Approximately 5V

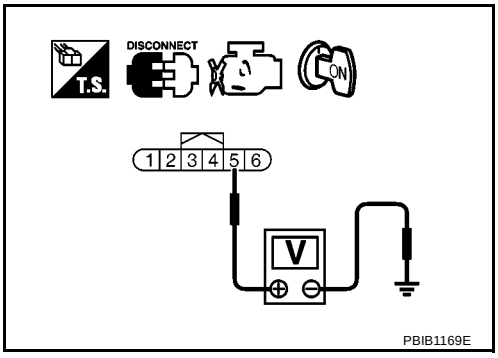

OK or NG

OK >> GO TO 3.
NG >> Repair open circuit or short to ground or short to power in harness or connectors.

3. CHECK INTAKE AIR TEMPERATURE SENSOR GROUND CIRCUIT FOR OPEN AND SHORT

1. Turn ignition switch OFF.
2. Disconnect ECM harness connector.
3. Check harness continuity between mass air flow sensor terminal 6 and ECM terminal 55.
   Refer to Wiring Diagram.

   Continuity should exist.

4. Also check harness for short to ground and short to power.

OK or NG

OK >> GO TO 4.
NG >> Repair open circuit or short to ground or short to power in harness or connectors.

4. CHECK INTAKE AIR TEMPERATURE SENSOR

Refer to EC-946, "Component Inspection" .

OK or NG

OK >> GO TO 5.
NG >> Replace mass air flow sensor (with intake air temperature sensor).

5. CHECK INTERMITTENT INCIDENT

Refer to EC-917, "TROUBLE DIAGNOSIS FOR INTERMITTENT INCIDENT" .

>> **INSPECTION END**

Component Inspection

BBS004B0

INTAKE AIR TEMPERATURE SENSOR

1. Check resistance between mass air flow sensor (1) terminals 5 and 6 under the following conditions.

Intake air temperature °C (°F)	Resistance kΩ
25 (77)	1.800 - 2.200

2. If NG, replace mass air flow sensor (with intake air temperature sensor).

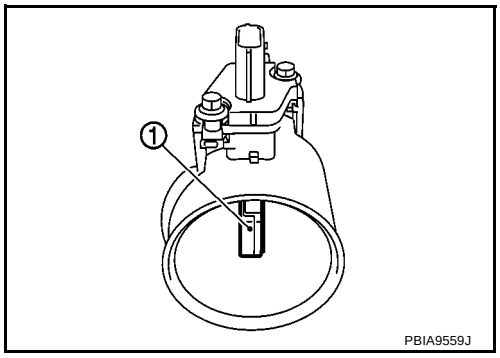

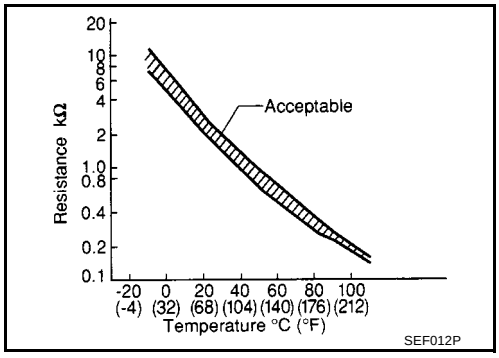

Removal and Installation

BBS004B1

MASS AIR FLOW SENSOR

Refer to EM-118, "AIR CLEANER AND AIR DUCT" .

DTC P0117, P0118 ECT SENSOR

PFP:22630

Component Description

BBS004B2

The engine coolant temperature sensor is used to detect the engine coolant temperature. The sensor modifies a voltage signal from the ECM. The modified signal returns to the ECM as the engine coolant temperature input. The sensor uses a thermistor which is sensitive to the change in temperature. The electrical resistance of the thermistor decreases as temperature increases.

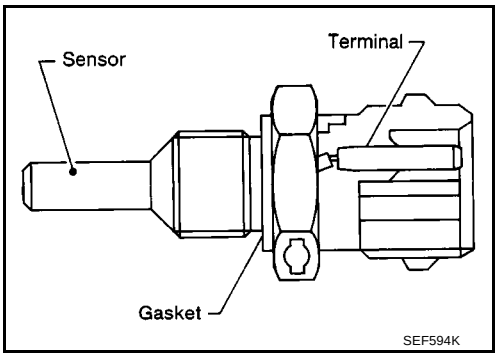

<Reference data>

Engine coolant temperature °C (°F)	Voltage* V	Resistance kΩ
–10 (14)	4.4	7.0 - 11.4
20 (68)	3.5	2.1 - 2.9
50 (122)	2.2	0.68 - 1.00
90 (194)	0.9	0.236 - 0.260

*: This data is reference value and is measured between ECM terminal 38 (Engine coolant temperature sensor) and ground.

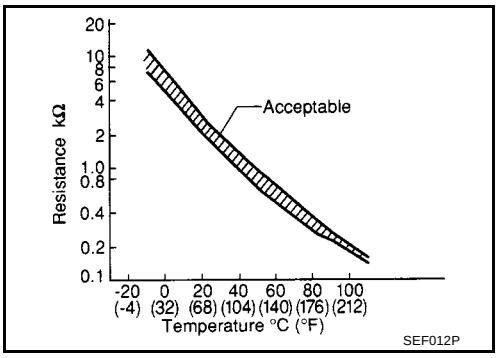

CAUTION:

Do not use ECM ground terminals when measuring input/output voltage. Doing so may result in damage to the ECM's transistor. Use a ground other than ECM terminals, such as the ground.

On Board Diagnosis Logic

BBS004B3

These self-diagnoses have the one trip detection logic.

DTC No.	Trouble Diagnosis Name	DTC Detecting Condition	Possible Cause
P0117 0117	Engine coolant temperature sensor circuit low input	An excessively low voltage from the sensor is sent to ECM.	● Harness or connectors (The sensor circuit is open or shorted.) ● Engine coolant temperature sensor
P0118 0118	Engine coolant temperature sensor circuit high input	An excessively high voltage from the sensor is sent to ECM.	

FAIL-SAFE MODE

When the malfunction is detected, the ECM enters fail-safe mode and the MI lights up.

Detected items	Engine operating condition in fail-safe mode	
Engine coolant temperature sensor circuit	Engine coolant temperature will be determined by ECM based on the time after turning ignition switch ON or START. CONSULT-II displays the engine coolant temperature decided by ECM.	
	Condition	Engine coolant temperature decided (CONSULT-II display)
	Just as ignition switch is turned ON or START	40°C (104°F)
	More than approx. 4 minutes after ignition ON or START	80°C (176°F)
	Except as shown above	40 - 80°C (104 - 176°F) (Depends on the time)
	When the fail-safe system for engine coolant temperature sensor is activated, the cooling fan operates while engine is running.	

DTC Confirmation Procedure

BBS004B4

NOTE:
If DTC Confirmation Procedure has been previously conducted, always turn ignition switch OFF and wait at least 10 seconds before conducting the next test.

WITH CONSULT-II

1. Turn ignition switch ON.
2. Select “DATA MONITOR” mode with CONSULT-II.
3. Wait at least 5 seconds.
4. If DTC is detected, go to EC-950, "Diagnostic Procedure" .

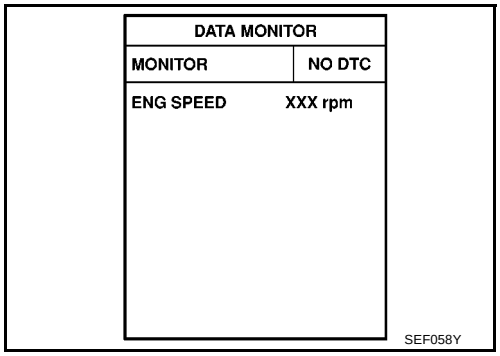

WITH GST

Follow the procedure “WITH CONSULT-II” above.

Wiring Diagram

BBS004B5

EC-ECTS-01

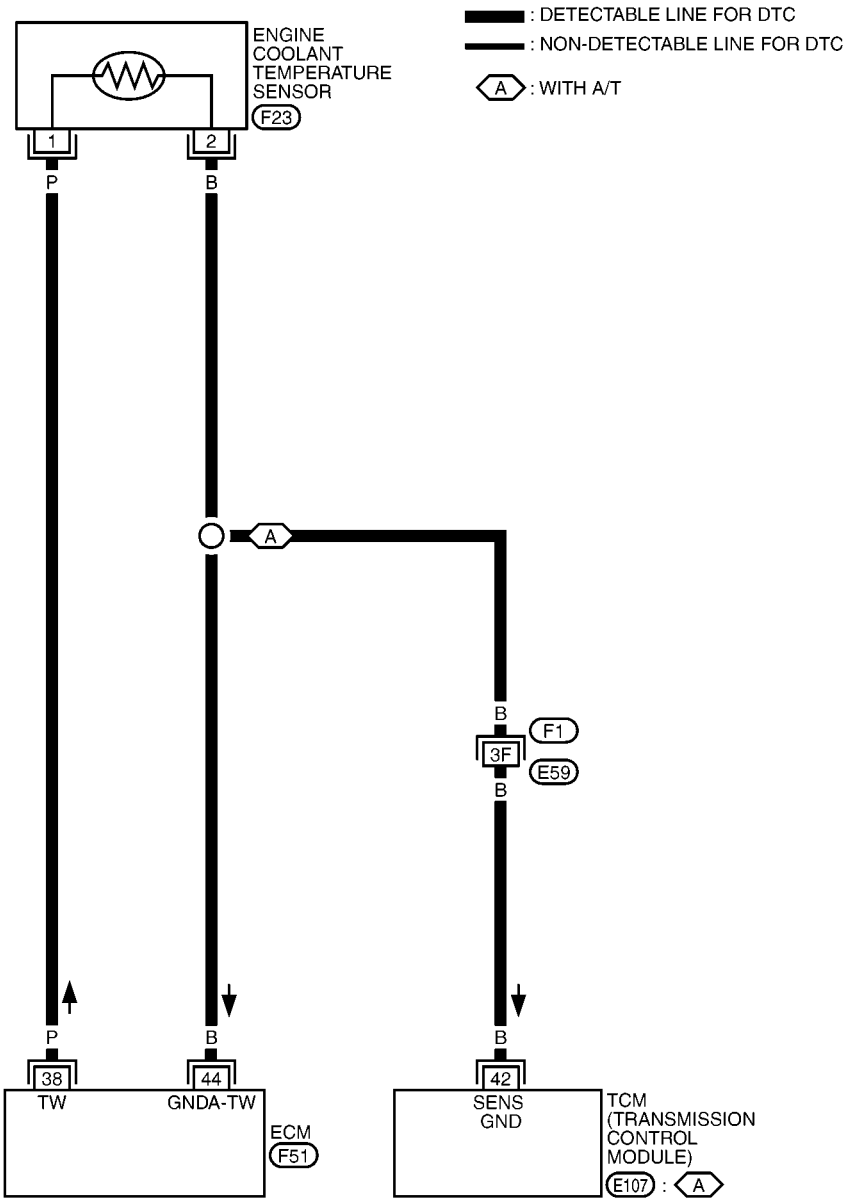

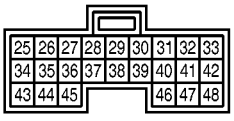

E107
GR

F23
GR

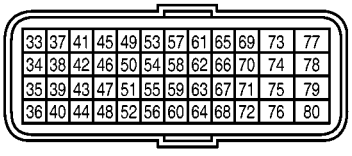

F51
BR

REFER TO THE FOLLOWING.
F1 - SUPER MULTIPLE JUNCTION (SMJ)

MBWA1459E

Diagnostic Procedure

BBS004B6

1. CHECK GROUND CONNECTIONS

1. Turn ignition switch OFF.
2. Loosen and retighten ground screws on the body.
   Refer to EC-924, "Ground Inspection" .

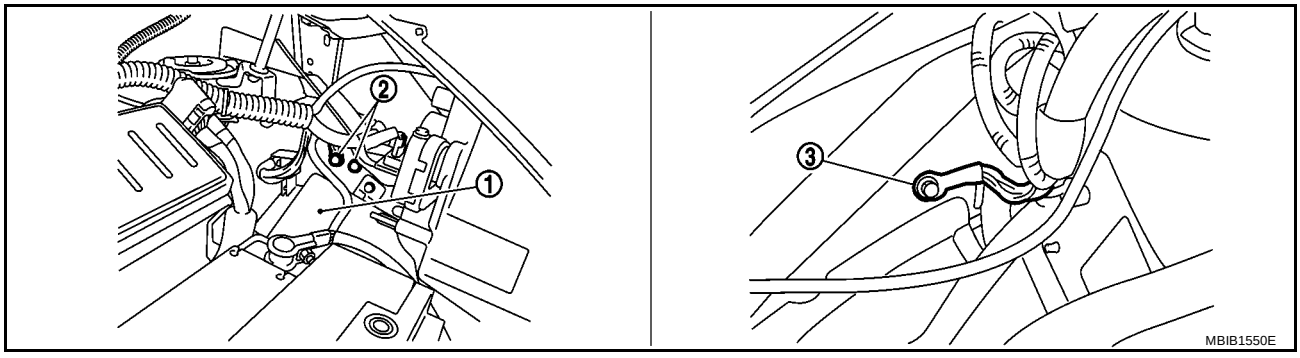

1. IPDM E/R
2. Body ground
3. Body ground

OK or NG

OK >> GO TO 2.
NG >> Repair or replace ground connections.

2. CHECK ECT SENSOR POWER SUPPLY CIRCUIT

1. Disconnect engine coolant temperature (ECT) sensor (1) harness connector.

– ⇦: Vehicle front

2. Turn ignition switch ON.

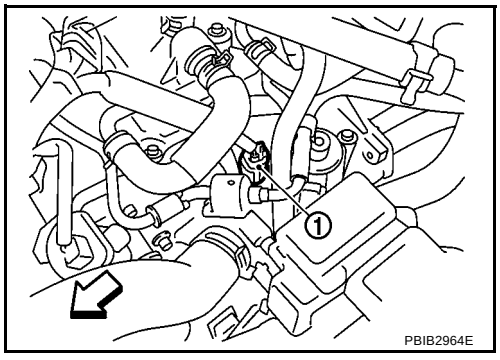

3. Check voltage between ECT sensor terminal 1 and ground with CONSULT-II or tester.

Voltage: Approximately 5V

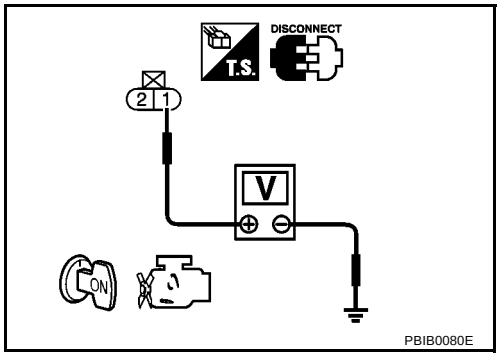

OK or NG

OK >> GO TO 3.
NG >> Repair open circuit or short to ground or short to power in harness or connectors.

3. CHECK ECT SENSOR GROUND CIRCUIT FOR OPEN AND SHORT

1. Turn ignition switch OFF.
2. Disconnect ECM harness connector.
3. Disconnect TCM harness connector.
4. Check harness continuity between ECM terminal 44, TCM terminal 42 and ECT sensor terminal 2. Refer to Wiring Diagram.

   Continuity should exist.

5. Also check harness for short to ground and short to power.

OK or NG

OK >> GO TO 5.
NG >> GO TO 4.

4. DETECT MALFUNCTIONING PART

Check the following.

- Harness connectors E59, F1
- Harness for open or short between ECM and ECT sensor
- Harness for open or short between TCM and ECT sensor

>> Repair open circuit or short to ground or short to power in harness or connectors.

5. CHECK ENGINE COOLANT TEMPERATURE SENSOR

Refer to EC-951, "Component Inspection" .

OK or NG

OK >> GO TO 6.
NG >> Replace engine coolant temperature sensor.

6. CHECK INTERMITTENT INCIDENT

Refer to EC-917, "TROUBLE DIAGNOSIS FOR INTERMITTENT INCIDENT" .

>> **INSPECTION END**

Component Inspection

BBS004B7

ENGINE COOLANT TEMPERATURE SENSOR

1. Check resistance between engine coolant temperature sensor terminals 1 and 2 as shown in the figure.

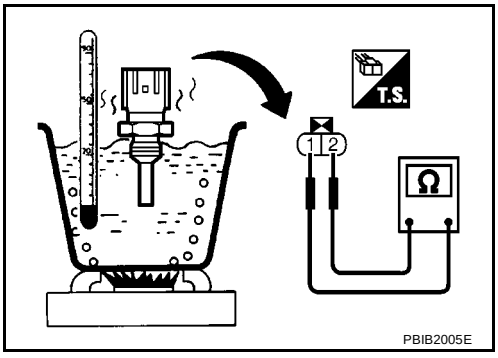

<Reference data>

Temperature °C (°F)	Resistance kΩ
20 (68)	2.1 - 2.9
50 (122)	0.68 - 1.00
90 (194)	0.236 - 0.260

2. If NG, replace engine coolant temperature sensor.

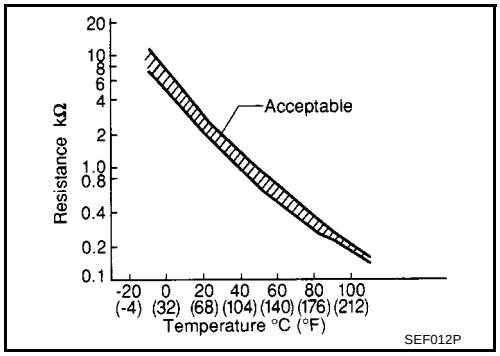

BBS004B8

Removal and Installation

ENGINE COOLANT TEMPERATURE SENSOR

Refer to EM-173, "CYLINDER HEAD" .

DTC P0122, P0123 TP SENSOR

PFP:16119

Component Description

BBS004B9

Electric throttle control actuator consists of throttle control motor, throttle position sensor, etc. The throttle position sensor responds to the throttle valve movement.
The throttle position sensor has the two sensors. These sensors are a kind of potentiometers which transform the throttle valve position into output voltage, and emit the voltage signal to the ECM. In addition, these sensors detect the opening and closing speed of the throttle valve and feed the voltage signals to the ECM. The ECM judges the current opening angle of the throttle valve from these signals and the ECM controls the throttle control motor to make the throttle valve opening angle properly in response to driving condition.

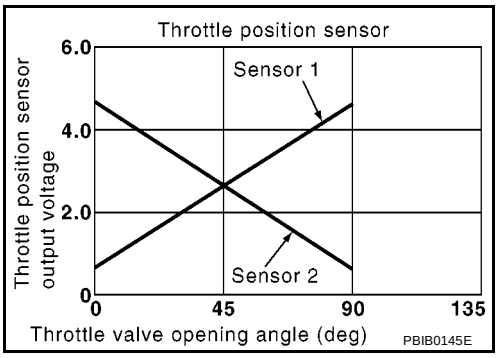

CONSULT-II Reference Value in Data Monitor Mode

BBS004BA

Specification data are reference values.

MONITOR ITEM	CONDITION		SPECIFICATION
THRTL SEN 1 THRTL SEN 2*	● Ignition switch: ON (Engine stopped) ● Shift lever: D (A/T), 1st (M/T)	Accelerator pedal: Fully released	More than 0.36V
		Accelerator pedal: Fully depressed	Less than 4.75V

*: Throttle position sensor 2 signal is converted by ECM internally. Thus, it differs from ECM terminal voltage signal.

On Board Diagnosis Logic

BBS004BB

These self-diagnoses have the one trip detection logic.

NOTE:
If DTC P0122 or P0123 is displayed with DTC P1229, first perform the trouble diagnosis for DTC P1229. Refer to **EC-1150, "DTC P1229 SENSOR POWER SUPPLY"** **.**

DTC No.	Trouble diagnosis name	DTC detecting condition	Possible cause
P0122 0122	Throttle position sensor 2 circuit low input	An excessively low voltage from the TP sensor 2 is sent to ECM.	● Harness or connectors (TP sensor 2 circuit is open or shorted.) ● Electric throttle control actuator (TP sensor 2)
P0123 0123	Throttle position sensor 2 circuit high input	An excessively high voltage from the TP sensor 2 is sent to ECM.	

FAIL-SAFE MODE

When the malfunction is detected, ECM enters fail-safe mode and the MI lights up.

Engine operation condition in fail-safe mode
The ECM controls the electric throttle control actuator in regulating the throttle opening in order for the idle position to be within +10 degrees. The ECM regulates the opening speed of the throttle valve to be slower than the normal condition. So, the acceleration will be poor.

DTC Confirmation Procedure

BBS004BC

NOTE:
If DTC Confirmation Procedure has been previously conducted, always turn ignition switch OFF and wait at least 10 seconds before conducting the next test.
TESTING CONDITION:
Before performing the following procedure, confirm that battery voltage is more than 10V at idle.

WITH CONSULT-II

1. Turn ignition switch ON.
2. Select “DATA MONITOR” mode with CONSULT-II.
3. Start engine and let it idle for 1 second.
4. If DTC is detected, go to EC-956, "Diagnostic Procedure" .

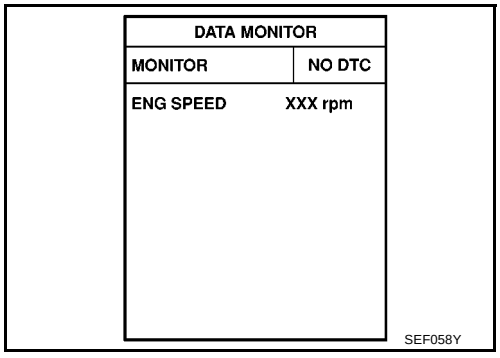

WITH GST

Follow the procedure “WITH CONSULT-II” above.

Wiring Diagram

BBS004BD

EC-TPS2-01

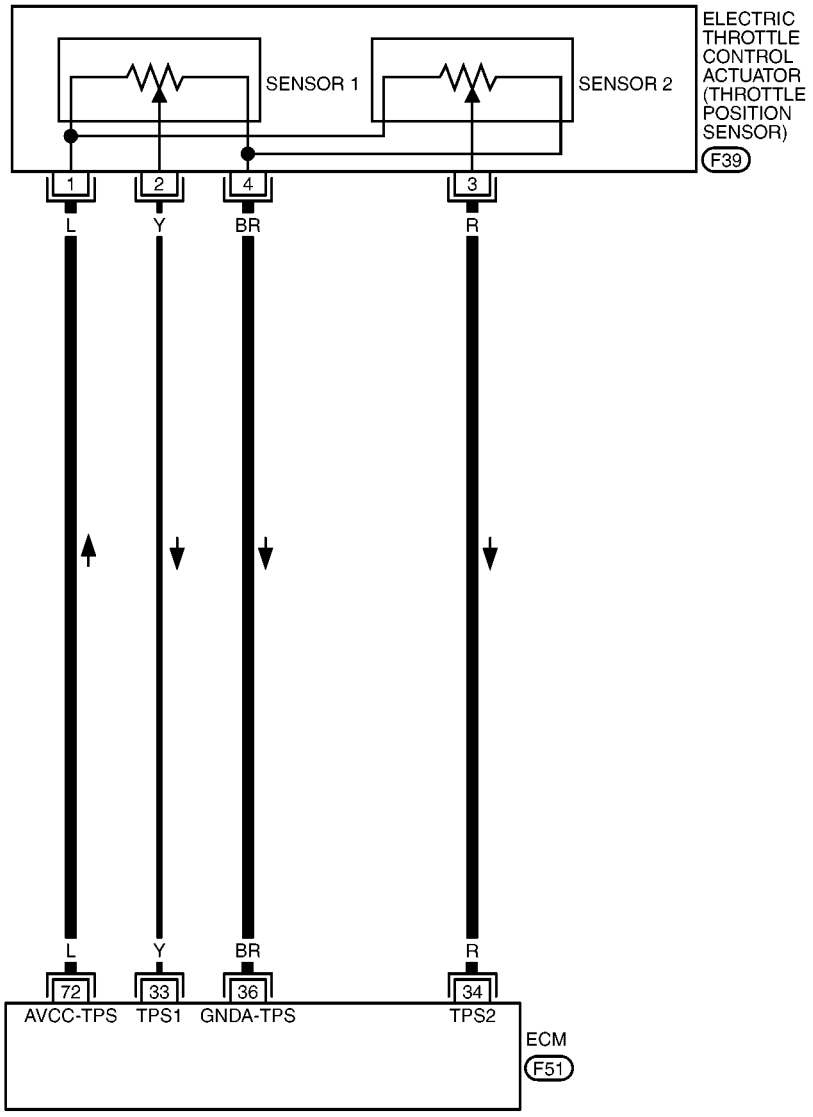

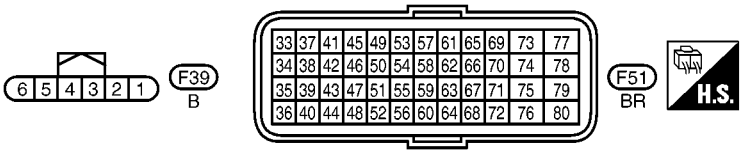

MBWA1460E

Specification data are reference values and are measured between each terminal and ground.

CAUTION:

Do not use ECM ground terminals when measuring input/output voltage. Doing so may result in damage to the ECM's transistor. Use a ground other than ECM terminals, such as the ground.

TERMINAL NO.	WIRE COLOR	ITEM	CONDITION	DATA (DC Voltage)
33	Y	Throttle position sensor 1	**[Ignition switch: ON]** ● Engine stopped ● Shift lever: D (A/T), 1st (M/T) ● Accelerator pedal: Fully released	More than 0.36V
			[Ignition switch: ON] ● Engine stopped ● Shift lever: D (A/T), 1st (M/T) ● Accelerator pedal: Fully depressed	Less than 4.75V
34	R	Throttle position sensor 2	**[Ignition switch: ON]** ● Engine stopped ● Shift lever: D (A/T), 1st (M/T) ● Accelerator pedal: Fully released	Less than 4.75V
			[Ignition switch: ON] ● Engine stopped ● Shift lever: D (A/T), 1st (M/T) ● Accelerator pedal: Fully depressed	More than 0.36V
36	BR	Sensor ground (Throttle position sensor)	**[Engine is running]** ● **Warm-up condition** ● Idle speed	Approximately 0V
72	L	Sensor power supply (Throttle position sensor)	**[Ignition switch: ON]**	Approximately 5V

Diagnostic Procedure

BBS004BE

1. CHECK GROUND CONNECTIONS

1. Turn ignition switch OFF.
2. Loosen and retighten ground screws on the body.
   Refer to EC-924, "Ground Inspection" .

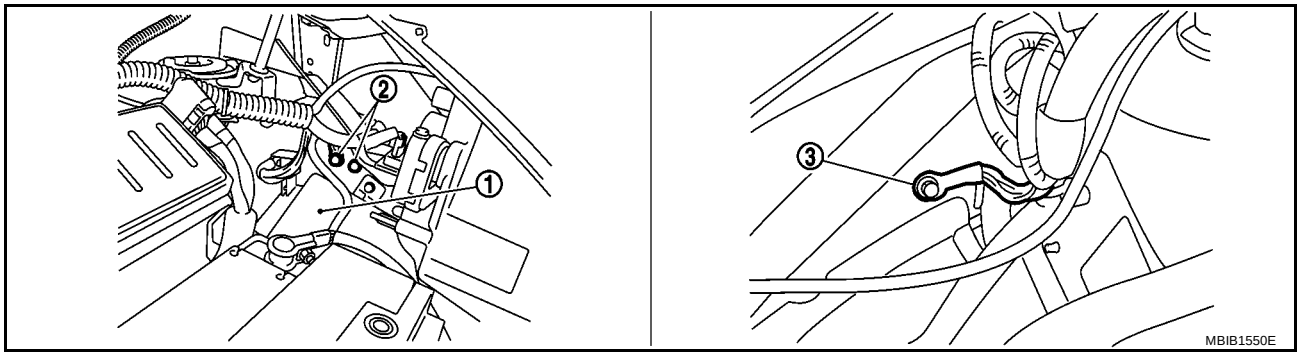

1. IPDM E/R
2. Body ground
3. Body ground

OK or NG

OK >> GO TO 2.
NG >> Repair or replace ground connections.

2. CHECK THROTTLE POSITION SENSOR 2 POWER SUPPLY CIRCUIT

1. Disconnect electric throttle control actuator (1) harness connector.

– ⇦: Vehicle front

2. Turn ignition switch ON.

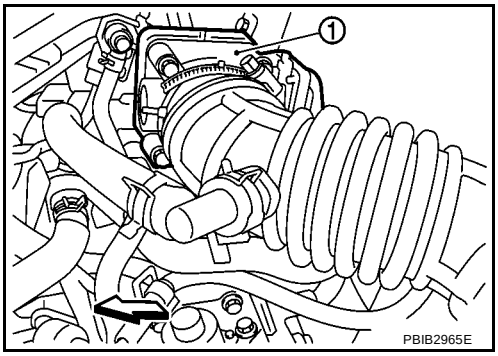

3. Check voltage between electric throttle control actuator terminal 1 and ground with CONSULT-II or tester.

Voltage: Approximately 5V

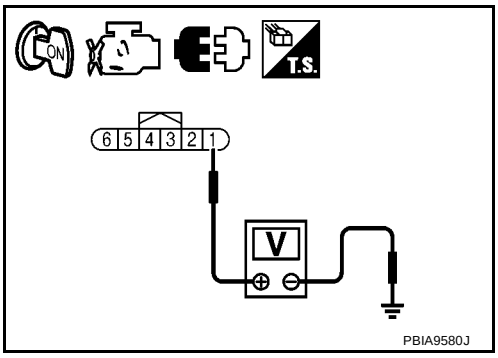

OK or NG

OK >> GO TO 3.
NG >> Repair open circuit or short to ground or short to power in harness or connectors.

3. CHECK THROTTLE POSITION SENSOR 2 GROUND CIRCUIT FOR OPEN AND SHORT

1. Turn ignition switch OFF.
2. Disconnect ECM harness connector.
3. Check harness continuity between electric throttle control actuator terminal 4 and ECM terminal 36. Refer to Wiring Diagram.

Continuity should exist.

4. Also check harness for short to ground and short to power.

OK or NG

OK >> GO TO 4.
NG >> Repair open circuit or short to ground or short to power in harness or connectors.

4. CHECK THROTTLE POSITION SENSOR 2 INPUT SIGNAL CIRCUIT FOR OPEN AND SHORT

1. Check harness continuity between ECM terminal 34 and electric throttle control actuator terminal 3. Refer to Wiring Diagram.

Continuity should exist.

2. Also check harness for short to ground and short to power.

OK or NG

OK >> GO TO 5.
NG >> Repair open circuit or short to ground or short to power in harness or connectors.

5. CHECK THROTTLE POSITION SENSOR

Refer to EC-958, "Component Inspection" .

OK or NG

OK >> GO TO 7.
NG >> GO TO 6.

6. REPLACE ELECTRIC THROTTLE CONTROL ACTUATOR

1. Replace the electric throttle control actuator.
2. Perform EC-857, "Throttle Valve Closed Position Learning" .
3. Perform EC-858, "Idle Air Volume Learning" .

>> **INSPECTION END**

7. CHECK INTERMITTENT INCIDENT

Refer to EC-917, "TROUBLE DIAGNOSIS FOR INTERMITTENT INCIDENT" .

>> **INSPECTION END**

Component Inspection

BBS004BF

THROTTLE POSITION SENSOR

1. Reconnect all harness connectors disconnected.
2. Perform EC-857, "Throttle Valve Closed Position Learning" .
3. Turn ignition switch ON.
4. Set shift lever to D position (A/T) or 1st position (M/T).
5. Check voltage between ECM terminals 33 (TP sensor 1 signal), 34 (TP sensor 2 signal) and ground under the following conditions.

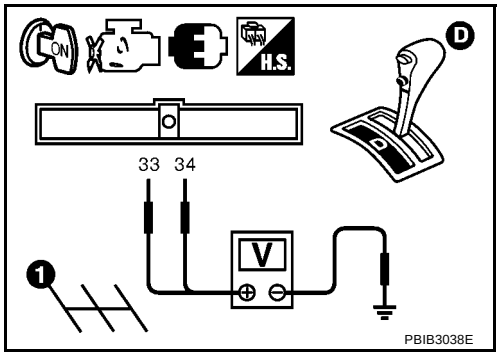

Terminal	Accelerator pedal	Voltage
33 (Throttle position sensor 1)	Fully released	More than 0.36V
	Fully depressed	Less than 4.75V
34 (Throttle position sensor 2)	Fully released	Less than 4.75V
	Fully depressed	More than 0.36V

6. If NG, replace electric throttle control actuator and go to the next step.
7. Perform EC-857, "Throttle Valve Closed Position Learning" .
8. Perform EC-858, "Idle Air Volume Learning" .

Removal and Installation

BBS004BG

ELECTRIC THROTTLE CONTROL ACTUATOR

Refer to EM-120, "INTAKE MANIFOLD" .

DTC P0132 HO2S1

PFP:22690

Component Description

BBS004BH

The heated oxygen sensor 1 is placed into the exhaust manifold. It detects the amount of oxygen in the exhaust gas compared to the outside air. The heated oxygen sensor 1 has a closed-end tube made of ceramic zirconia. The zirconia generates voltage from approximately 1V in richer conditions to 0V in leaner conditions. The heated oxygen sensor 1 signal is sent to the ECM. The ECM adjusts the injection pulse duration to achieve the ideal air-fuel ratio. The ideal air-fuel ratio occurs near the radical change from 1V to 0V.

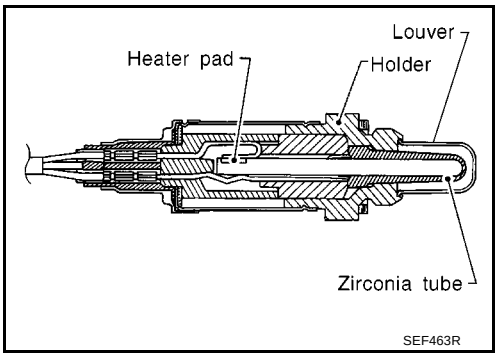

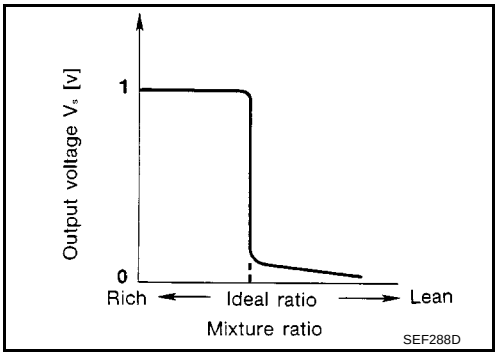

CONSULT-II Reference Value in Data Monitor Mode

BBS004BI

Specification data are reference values.

MONITOR ITEM	CONDITION		SPECIFICATION
HO2S1 (B1)	● Engine: After warming up	Maintaining engine speed at 2,000 rpm.	0 - 0.3V ←→ Approx. 0.6 - 1.0V
HO2S1 MNTR (B1)			LEAN ←→ RICH Changes more than 5 times during 10 seconds.

On Board Diagnosis Logic

BBS004BJ

To judge the malfunction, the diagnosis checks that the heated oxygen sensor 1 output is not inordinately high.

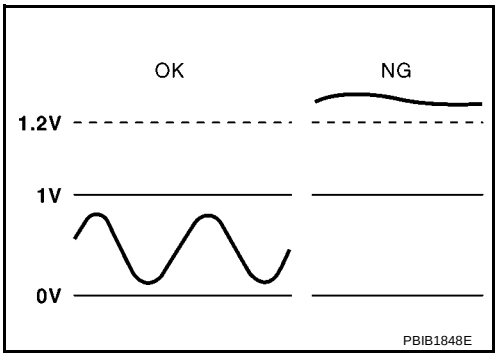

DTC No.	Trouble diagnosis name	DTC detecting condition	Possible cause
P0132 0132	Heated oxygen sensor 1 circuit high voltage	An excessively high voltage from the sensor is sent to ECM.	● Harness or connectors (The sensor circuit is open or shorted.) ● Heated oxygen sensor 1

DTC Confirmation Procedure

BBS004BK

NOTE:
If DTC Confirmation Procedure has been previously conducted, always turn ignition switch OFF and wait at least 10 seconds before conducting the next test.

WITH CONSULT-II

1. Start engine and warm it up to normal operating temperature.
2. Turn ignition switch OFF and wait at least 10 seconds.
3. Turn ignition switch ON.
4. Select “DATA MONITOR” mode with CONSULT-II.
5. Restart engine and let it idle for 2 minutes.
6. If 1st trip DTC is detected, go to EC-962, "Diagnostic Procedure"
.

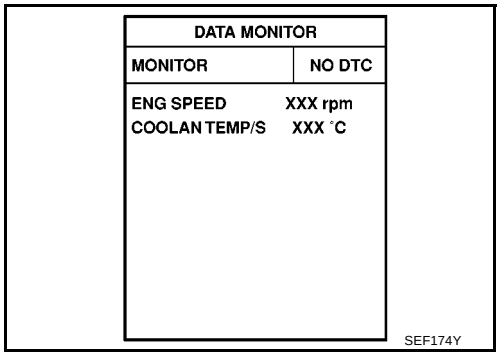

WITH GST

Follow the procedure “WITH CONSULT-II” above.

Wiring Diagram

BBS004BL

EC-HO2S1-01

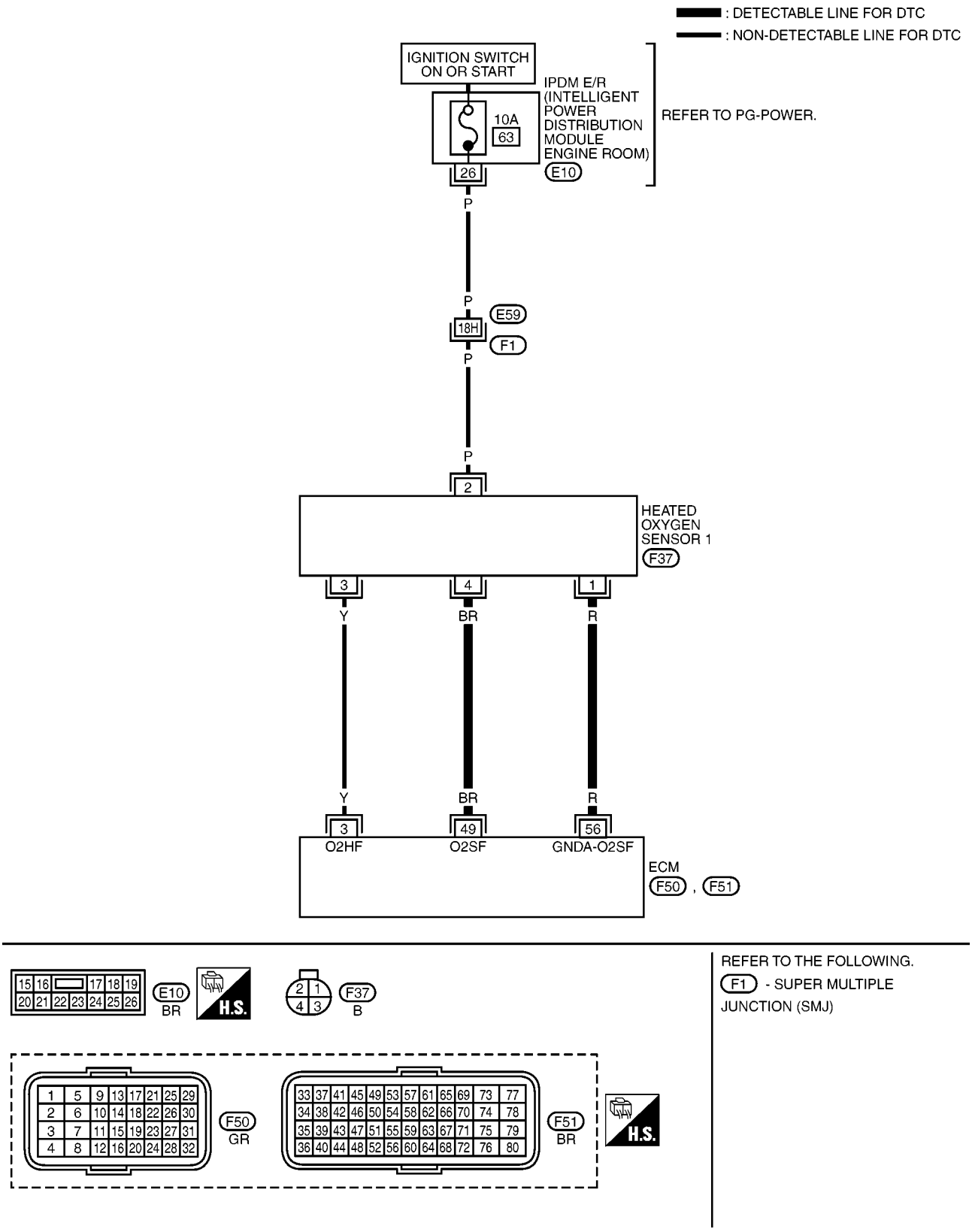

MBWA1461E

Specification data are reference values and are measured between each terminal and ground.
Pulse signal is measured by CONSULT-II.

CAUTION:
Do not use ECM ground terminals when measuring input/output voltage. Doing so may result in damage to the ECM's transistor. Use a ground other than ECM terminals, such as the ground.

TERMINAL NO.	WIRE COLOR	ITEM	CONDITION	DATA (DC Voltage)
3	Y	Heated oxygen sensor 1 heater	**[Engine is running]** ● **Warm-up condition** ● Engine speed: Below 3,600 rpm	Approximately 10V★ 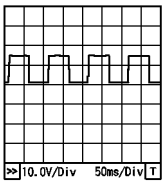 PBIA8148J
			[Ignition switch: ON] ● Engine stopped **[Engine is running]** ● Engine speed: Above 3,600 rpm	BATTERY VOLTAGE (11 - 14V)
49	BR	Heated oxygen sensor 1	**[Engine is running]** ● **Warm-up condition** ● Engine speed: 2,000 rpm	0 - Approximately 1.0V (Periodically change)
56	R	Sensor ground (Heated oxygen sensor 1)	**[Engine is running]** ● Idle speed	Approximately 0V

★: Average voltage for pulse signal (Actual pulse signal can be confirmed by oscilloscope.)

Diagnostic Procedure

BBS004BM

1. CHECK GROUND CONNECTIONS

1. Turn ignition switch OFF.
2. Loosen and retighten ground screws on the body.
   Refer to EC-924, "Ground Inspection" .

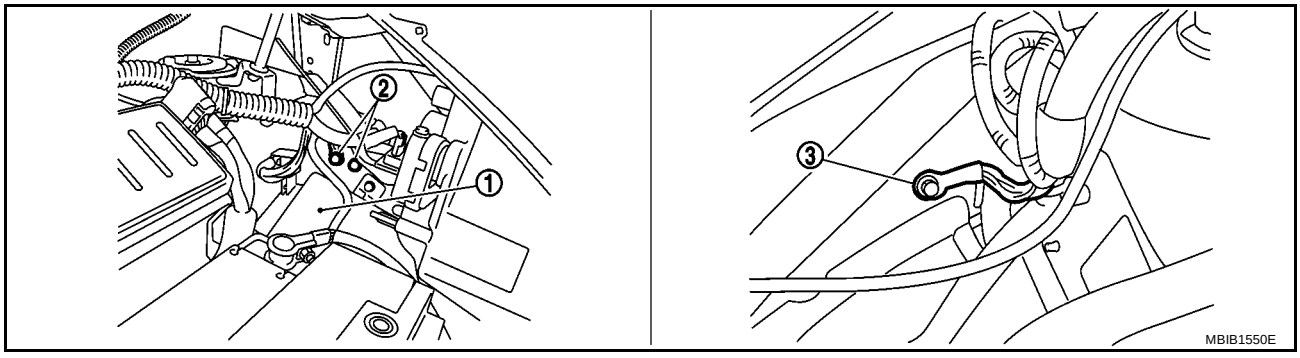

1. IPDM E/R
2. Body ground
3. Body ground

OK or NG

OK >> GO TO 2.
NG >> Repair or replace ground connections.

2. RETIGHTEN HEATED OXYGEN SENSOR 1

Loosen and retighten heated oxygen sensor 1 (1).

- ⇦: Vehicle front
- Exhaust manifold (2)

Tightening torque: 50 N·m (5.1 kg-m, 37 ft-lb)

>> GO TO 3.

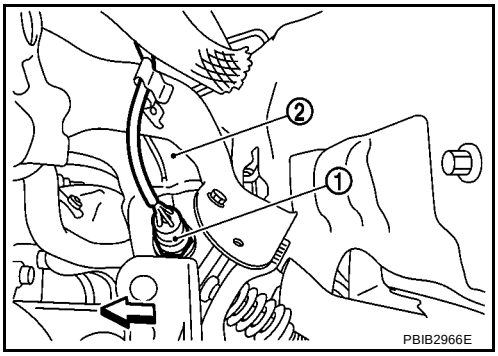

3. CHECK HO2S1 GROUND CIRCUIT FOR OPEN AND SHORT

1. Disconnect heated oxygen sensor 1 harness connector (1).
- ⇦: Vehicle front
2. Disconnect ECM harness connector.
3. Check harness continuity between HO2S1 terminal 1 and ECM terminal 56.
   Refer to Wiring Diagram.

   Continuity should exist.

4. Also check harness for short to ground and short to power.

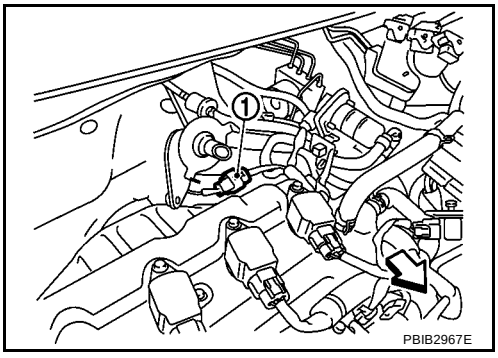

OK or NG

OK >> GO TO 4.
NG >> Repair open circuit or short to ground or short to power in harness or connectors.

4. CHECK HO2S1 INPUT SIGNAL CIRCUIT FOR OPEN AND SHORT

1. Check harness continuity between HO2S1 terminal 4 and ECM terminal 49.
   Refer to Wiring Diagram.

   Continuity should exist.

2. Check harness continuity between ECM terminal 49 or HO2S1 terminal 4 and ground.
   Refer to Wiring Diagram.

   Continuity should not exist.

3. Also check harness for short to power.

OK or NG

OK >> GO TO 5.
NG >> Repair open circuit or short to ground or short to power in harness or connectors.

5. CHECK HO2S1 CONNECTOR FOR WATER

Check heated oxygen sensor 1 connector for water.

Water should not exist.

OK or NG

OK >> GO TO 6.
NG >> Repair or replace harness or connectors.

6. CHECK HEATED OXYGEN SENSOR 1

Refer to EC-965, "Component Inspection" .

OK or NG

OK >> GO TO 7.
NG >> Replace heated oxygen sensor 1.

7. CHECK INTERMITTENT INCIDENT

Refer to EC-917, "TROUBLE DIAGNOSIS FOR INTERMITTENT INCIDENT" .

>> **INSPECTION END**

Component Inspection

BBS004BN

HEATED OXYGEN SENSOR 1

With CONSULT-II

1. Start engine and warm it up to normal operating temperature.
2. Select “MANU TRIG” and adjust “TRIGGER POINT” to 100% in “DATA MONITOR” mode with CONSULT-II.
3. Select “HO2S1 (B1)” and “HO2S1 MNTR (B1)”.
4. Hold engine speed at 2,000 rpm under no load during the following steps.
5. Touch “RECORD” on CONSULT-II screen.

DATA MONITOR	
MONITOR	NO DTC
ENG SPEED	XXX rpm
MAS A/F SE-B1	XXX V
COOLAN TEMP/S	XXX °C
HO2S1 (B1)	XXX V
HO2S1 MNTR (B1)	LEAN

SEF646Y

6. Check the following.
   - “HO2S1 MNTR (B1)” in “DATA MONITOR” mode changes from “RICH” to “LEAN” to “RICH” more than 5 times in 10 seconds.
     5 times (cycles) are counted as shown in the figure.
   - “HO2S1 (B1)” voltage goes above 0.6V at least once.
   - “HO2S1 (B1)” voltage goes below 0.3V at least once.
   - “HO2S1 (B1)” voltage never exceeds 1.0V.

cycle	1	2	3	4	5
HO2S1 MNTR (B1)	R-L-R-L-R-L-R-L-R-L-R				

R means HO2S1 MNTR (B1) indicates RICH
L means HO2S1 MNTR (B1) indicates LEAN

SEF217YA

Trigger	ENG SPEED	HO2S1 (B1)
	rpm	V
XXX	XXX	XXX
XXX	XXX	XXX
XXX	XXX	XXX
XXX	XXX	XXX
XXX	XXX	XXX
XXX	XXX	XXX
XXX	XXX	XXX
XXX	XXX	XXX
XXX	XXX	XXX
XXX	XXX	XXX
XXX	XXX	XXX
XXX	XXX	XXX

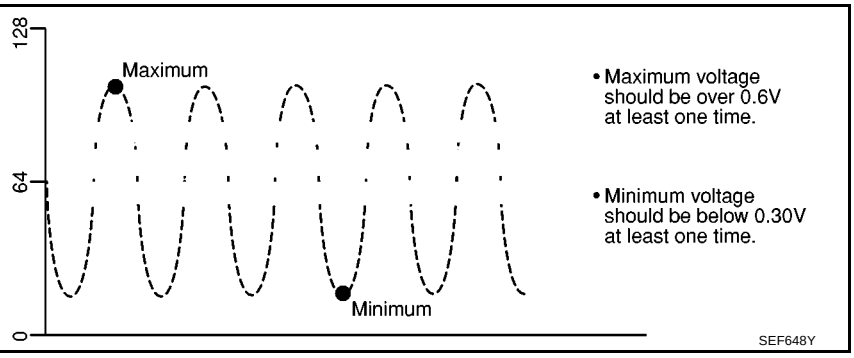

CAUTION:

- **Discard any heated oxygen sensor which has been dropped from a height of more than 0.5 m (19.7 in) onto a hard surface such as a concrete floor; use a new one.**
- **Before installing new oxygen sensor, clean exhaust system threads using Oxygen Sensor Thread Cleaner tool and approved anti-seize lubricant.**

Without CONSULT-II

1. Start engine and warm it up to normal operating temperature.
2. Set voltmeter probes between ECM terminal 49 (HO2S1 signal) and ground.

3. Check the following with engine speed held at 2,000 rpm constant under no load.
   - The voltage fluctuates between 0 to 0.3V and 0.6 to 1.0V more than 5 times within 10 seconds.
   - The maximum voltage is over 0.6V at least 1 time.
   - The minimum voltage is below 0.3V at least 1 time.
   - The voltage never exceeds 1.0V.

   1 time: 0 - 0.3V → 0.6 - 1.0V → 0 - 0.3V
   2 times: 0 - 0.3V → 0.6 - 1.0V → 0 - 0.3V → 0.6 - 1.0V → 0 - 0.3V

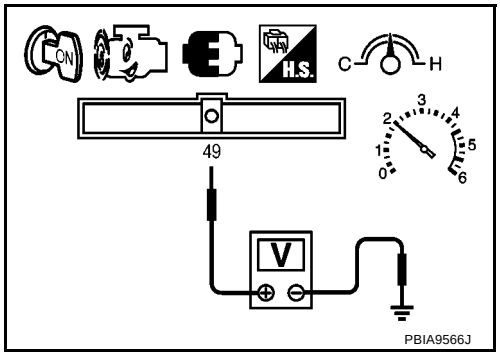

CAUTION:

- **Discard any heated oxygen sensor which has been dropped from a height of more than 0.5 m (19.7 in) onto a hard surface such as a concrete floor; use a new one.**
- **Before installing new oxygen sensor, clean exhaust system threads using Oxygen Sensor Thread Cleaner tool and approved anti-seize lubricant.**

Removal and Installation

BBS004BO

HEATED OXYGEN SENSOR 1

Refer to EM-124, "EXHAUST MANIFOLD" .

DTC P0133 HO2S1

PFP:22690

Component Description

BBS004BP

The heated oxygen sensor 1 is placed into the exhaust manifold. It detects the amount of oxygen in the exhaust gas compared to the outside air. The heated oxygen sensor 1 has a closed-end tube made of ceramic zirconia. The zirconia generates voltage from approximately 1V in richer conditions to 0V in leaner conditions. The heated oxygen sensor 1 signal is sent to the ECM. The ECM adjusts the injection pulse duration to achieve the ideal air-fuel ratio. The ideal air-fuel ratio occurs near the radical change from 1V to 0V.

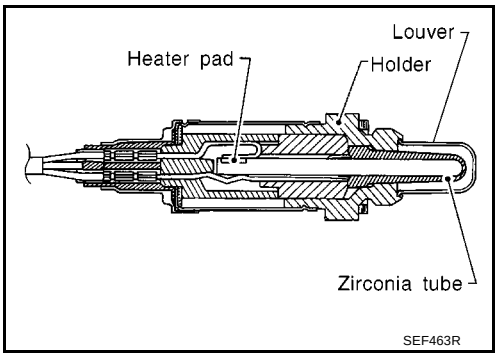

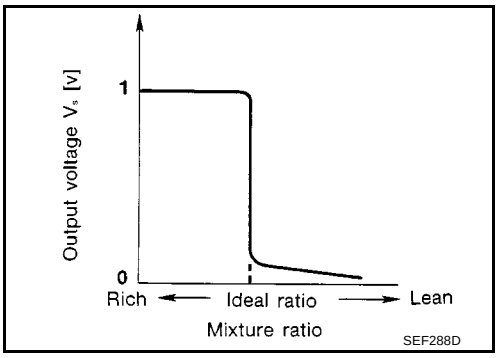

CONSULT-II Reference Value in Data Monitor Mode

BBS004BQ

Specification data are reference values.

MONITOR ITEM	CONDITION		SPECIFICATION
HO2S1 (B1)	● Engine: After warming up	Maintaining engine speed at 2,000 rpm.	0 - 0.3V ←→ Approx. 0.6 - 1.0V
HO2S1 MNTR (B1)			LEAN ←→ RICH Changes more than 5 times during 10 seconds.

On Board Diagnosis Logic

BBS004BR

To judge the malfunction of heated oxygen sensor 1, this diagnosis measures response time of heated oxygen sensor 1 signal. The time is compensated by engine operating (speed and load), fuel feedback control constant, and heated oxygen sensor 1 temperature index. Judgment is based on whether the compensated time (heated oxygen sensor 1 cycling time index) is inordinately long or not.

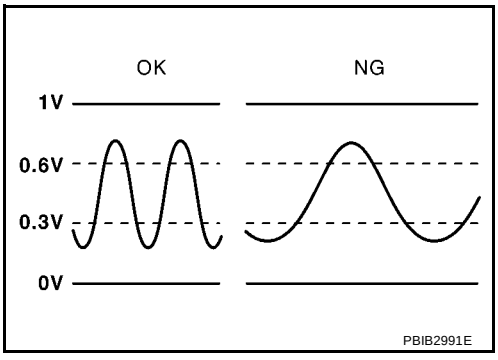

DTC No.	Trouble diagnosis name	DTC detecting condition	Possible cause
P0133 0133	Heated oxygen sensor 1 circuit slow response	The response of the voltage signal from the sensor takes more than the specified time.	● Harness or connectors (The sensor circuit is open or shorted.) ● Heated oxygen sensor 1 ● Fuel pressure ● Fuel injector ● Intake air leaks ● Exhaust gas leaks ● PCV valve ● Mass air flow sensor

DTC Confirmation Procedure

BBS004BS

CAUTION:
Always drive vehicle at a safe speed.

NOTE:
If DTC Confirmation Procedure has been previously conducted, always turn ignition switch OFF and wait at least 10 seconds before conducting the next test.

TESTING CONDITION:

- **Always perform at a temperature above –10°C (14°F).**
- **Before performing the following procedure, confirm that battery voltage is more than 11V at idle.**

WITH CONSULT-II

1. Start engine and warm it up to normal operating temperature.
2. Stop engine and wait at least 10 seconds.
3. Turn ignition switch ON and select “HO2S1 (B1) P0133” of “HO2S1” in “DTC WORK SUPPORT” mode with CONSULT-II.
4. Touch “START”.
5. Start engine and let it idle for at least 3 minutes.

   NOTE:
   Never raise engine speed above 3,600 rpm after this step. If the engine speed limit is exceeded, return to step 5.

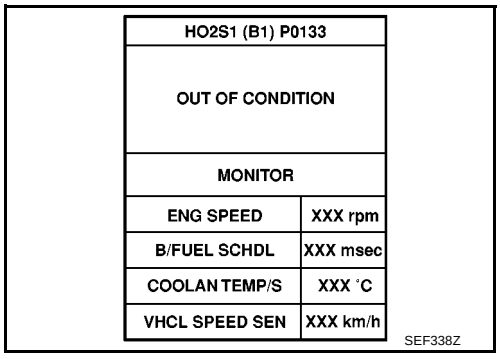

6. When the following conditions are met, “TESTING” will be displayed on the CONSULT-II screen. Maintain the conditions continuously until “TESTING” changes to “COMPLETED”. (It will take approximately 40 to 50 seconds.)

ENG SPEED	A/T: 1,900 - 3,300 rpm M/T: 2,400 - 3,950 rpm
VHCL SPEED SE	More than 80 km/h (50 MPH)
B/FUEL SCHDL	A/T: 3.5 - 11.2 msec M/T: 2.8 - 10.2 msec
Shift lever	Suitable position

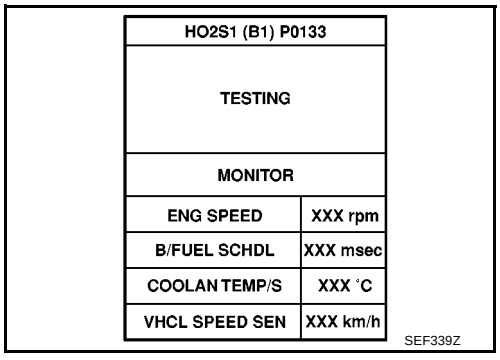

If “TESTING” is not displayed after 5 minutes, retry from step 2.

7. Make sure that “OK” is displayed after touching “SELF-DIAG RESULTS”. If “NG” is displayed, refer to EC-971, "Diagnostic Procedure" .

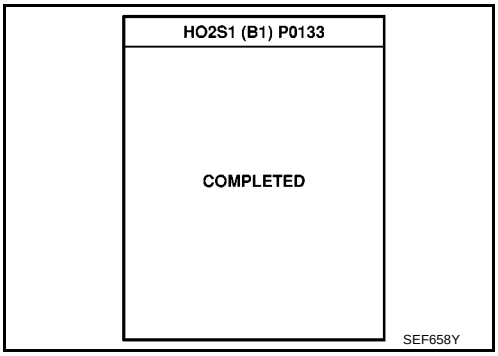

Overall Function Check

BBS004BT

Use this procedure to check the overall function of the heated oxygen sensor 1 circuit. During this check, a 1st trip DTC might not be confirmed.

WITH GST

1. Start engine and warm it up to normal operating temperature.
2. Set voltmeter probes between ECM terminal 49 (HO2S1 signal) and ground.
3. Check the following with engine speed held at 2,000 rpm constant under no load.

- The voltage fluctuates between 0 to 0.3V and 0.6 to 1.0V more than 5 times within 10 seconds.

1 time: 0 - 0.3V → 0.6 - 1.0V → 0 - 0.3V

2 times: 0 - 0.3V → 0.6 - 1.0V → 0 - 0.3V → 0.6 - 1.0V → 0 - 0.3V

4. If NG, go to EC-971, "Diagnostic Procedure" .

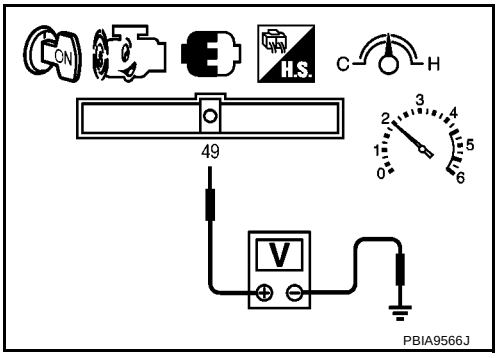

Wiring Diagram

BBS004BU

EC-HO2S1-01

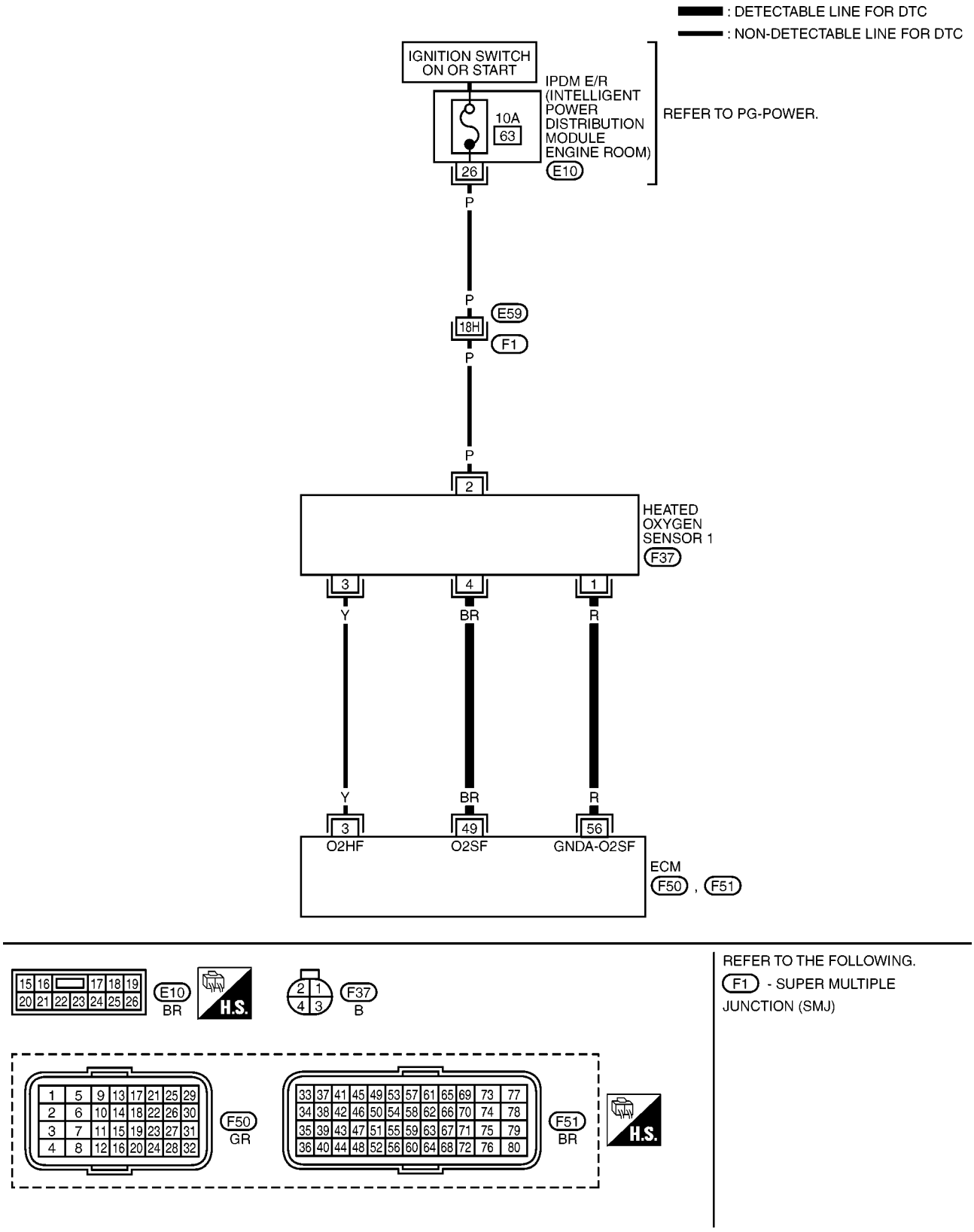

MBWA1461E

Specification data are reference values and are measured between each terminal and ground.
Pulse signal is measured by CONSULT-II.

CAUTION:
Do not use ECM ground terminals when measuring input/output voltage. Doing so may result in damage to the ECM's transistor. Use a ground other than ECM terminals, such as the ground.

TERMINAL NO.	WIRE COLOR	ITEM	CONDITION	DATA (DC Voltage)
3	Y	Heated oxygen sensor 1 heater	**[Engine is running]** ● **Warm-up condition** ● Engine speed: Below 3,600 rpm	Approximately 10V★ 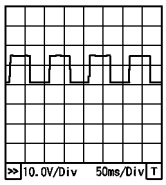 PBIA8148J
			[Ignition switch: ON] ● Engine stopped **[Engine is running]** ● Engine speed: Above 3,600 rpm	BATTERY VOLTAGE (11 - 14V)
49	BR	Heated oxygen sensor 1	**[Engine is running]** ● **Warm-up condition** ● Engine speed: 2,000 rpm	0 - Approximately 1.0V (Periodically change)
56	R	Sensor ground (Heated oxygen sensor 1)	**[Engine is running]** ● **Warm-up condition** ● Idle speed	Approximately 0V

★: Average voltage for pulse signal (Actual pulse signal can be confirmed by oscilloscope.)

Diagnostic Procedure

BBS004BV

1. CHECK GROUND CONNECTIONS

1. Turn ignition switch OFF.
2. Loosen and retighten ground screws on the body.
   Refer to EC-924, "Ground Inspection" .

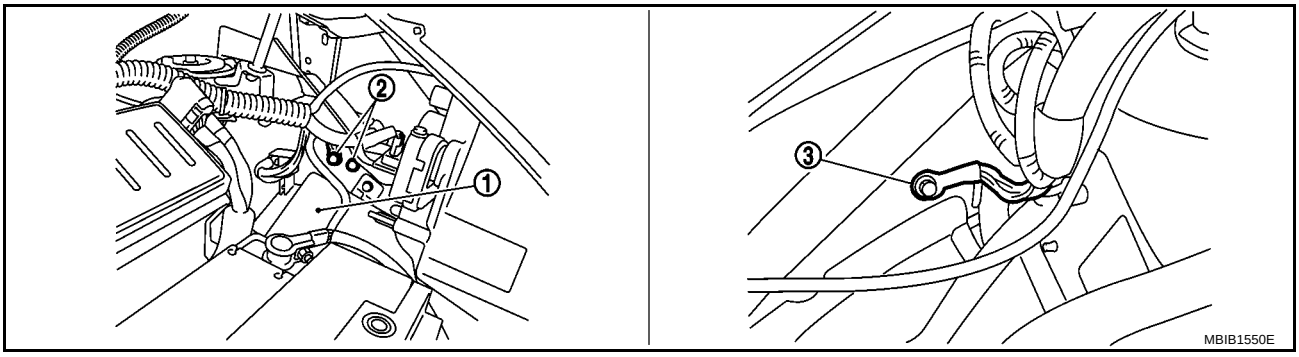

1. IPDM E/R
2. Body ground
3. Body ground

OK or NG

OK >> GO TO 2.
NG >> Repair or replace ground connections.

2. RETIGHTEN HEATED OXYGEN SENSOR 1

Loosen and retighten heated oxygen sensor 1 (1).

- ⇦: Vehicle front
- Exhaust manifold (2)

Tightening torque: 50 N·m (5.1 kg-m, 37 ft-lb)

>> GO TO 3.

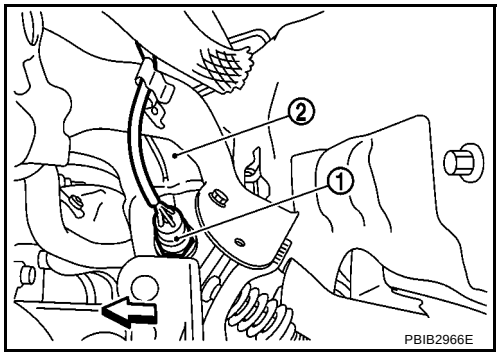

3. CHECK FOR EXHAUST GAS LEAK

1. Start engine and run it at idle.
2. Listen for an exhaust gas leak before three way catalyst (manifold).

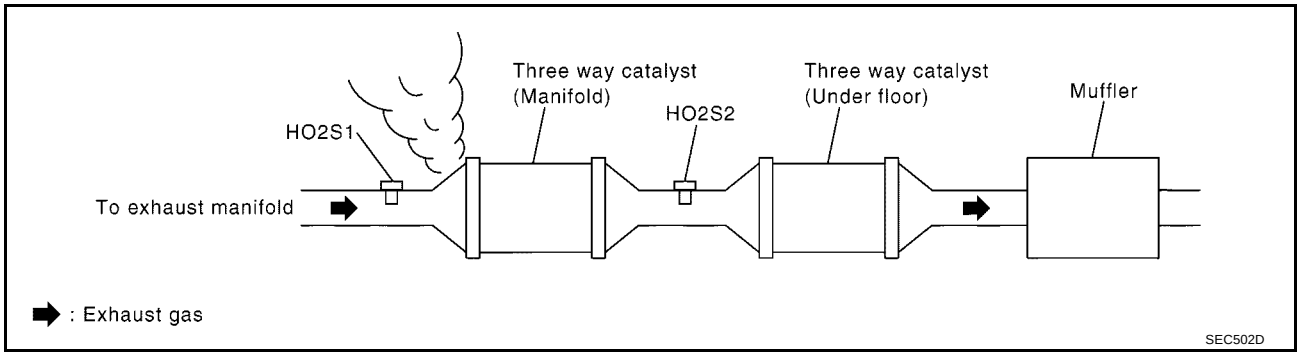

OK or NG

OK >> GO TO 4.
NG >> Repair or replace.

4. CHECK FOR INTAKE AIR LEAK

Listen for an intake air leak after the mass air flow sensor.

OK or NG

OK >> GO TO 5.
NG >> Repair or replace.

5. CLEAR THE SELF-LEARNING DATA

With CONSULT-II

1. Start engine and warm it up to normal operating temperature.
2. Select “SELF-LEARNING CONT” in “WORK SUPPORT” mode with CONSULT-II.
3. Clear the self-learning control coefficient by touching “CLEAR”.
4. Run engine for at least 10 minutes at idle speed.
   Is the 1st trip DTC P0171 or P0172 detected?
   Is it difficult to start engine?

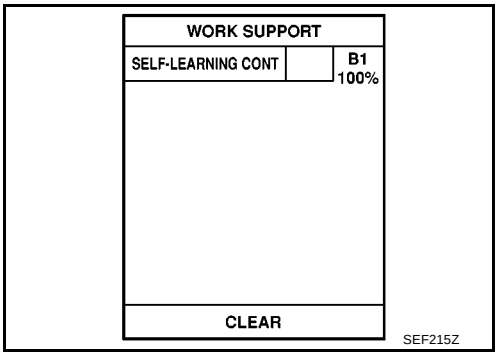

Without CONSULT-II

1. Start engine and warm it up to normal operating temperature.
2. Turn ignition switch OFF.
3. Disconnect mass air flow sensor (1) harness connector, and restart and run engine for at least 5 seconds at idle speed.
4. Stop engine and reconnect mass air flow sensor harness connector.
5. Make sure that DTC P0102 is displayed.
6. Erase the DTC memory. Refer to EC-841, "HOW TO ERASE EMISSION-RELATED DIAGNOSTIC INFORMATION" .
7. Make sure that DTC P0000 is displayed.
8. Run engine for at least 10 minutes at idle speed.
   Is the 1st trip DTC P0171 or P0172 detected?
   Is it difficult to start engine?

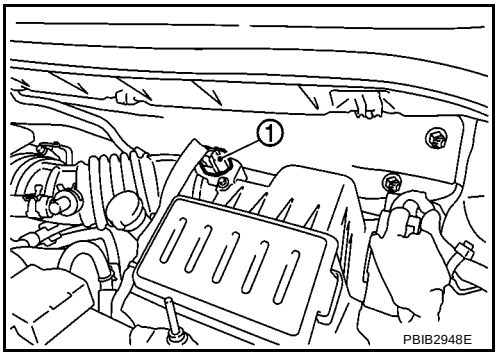

Yes or No

Yes >> Perform trouble diagnosis for DTC P0171 or DTC P0172 (Refer to EC-1012, "DTC P0171 FUEL INJECTION SYSTEM FUNCTION" or EC-1019, "DTC P0172 FUEL INJECTION SYSTEM FUNCTION").

No >> GO TO 6.

6. CHECK HO2S1 GROUND CIRCUIT FOR OPEN AND SHORT

1. Turn ignition switch OFF.
2. Disconnect heated oxygen sensor 1 harness connector (1).

– ⇦: Vehicle front

3. Disconnect ECM harness connector.
4. Check harness continuity between HO2S1 terminal 1 and ECM terminal 56. Refer to Wiring Diagram.

   Continuity should exist.

5. Also check harness for short to ground and short to power.

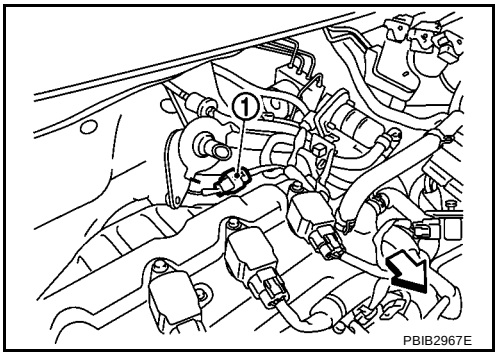

OK or NG

OK >> GO TO 7.

NG >> Repair open circuit or short to ground or short to power in harness or connectors.

7. CHECK HO2S1 INPUT SIGNAL CIRCUIT FOR OPEN AND SHORT

1. Check harness continuity between HO2S1 terminal 4 and ECM terminal 49.
   Refer to Wiring Diagram.

   Continuity should exist.

2. Check harness continuity between ECM terminal 49 or HO2S1 terminal 4 and ground.
   Refer to Wiring Diagram.

   Continuity should not exist.

3. Also check harness for short to power.

OK or NG

OK >> GO TO 8.
NG >> Repair open circuit or short to ground or short to power in harness or connectors.

8. CHECK MASS AIR FLOW SENSOR

Refer to EC-940, "Component Inspection" .

OK or NG

OK >> GO TO 9.
NG >> Replace mass air flow sensor.

9. CHECK PCV VALVE

Refer to EC-828, "Component Inspection" .

OK or NG

OK >> GO TO 10.
NG >> Replace PCV valve.

10. CHECK HEATED OXYGEN SENSOR 1

Refer to EC-975, "Component Inspection" .

OK or NG

OK >> GO TO 11.
NG >> Replace heated oxygen sensor 1.

11. CHECK INTERMITTENT INCIDENT

Refer to EC-917, "TROUBLE DIAGNOSIS FOR INTERMITTENT INCIDENT" .

>> **INSPECTION END**

Component Inspection

BBS004BW

HEATED OXYGEN SENSOR 1

With CONSULT-II

1. Start engine and warm it up to normal operating temperature.
2. Select “MANU TRIG” and adjust “TRIGGER POINT” to 100% in “DATA MONITOR” mode with CONSULT-II.
3. Select “HO2S1 (B1)” and “HO2S1 MNTR (B1)”.
4. Hold engine speed at 2,000 rpm under no load during the following steps.
5. Touch “RECORD” on CONSULT-II screen.

DATA MONITOR	
MONITOR	NO DTC
ENG SPEED	XXX rpm
MAS A/F SE-B1	XXX V
COOLAN TEMP/S	XXX °C
HO2S1 (B1)	XXX V
HO2S1 MNTR (B1)	LEAN

SEF646Y

6. Check the following.
   - “HO2S1 MNTR (B1)” in “DATA MONITOR” mode changes from “RICH” to “LEAN” to “RICH” more than 5 times in 10 seconds.
     5 times (cycles) are counted as shown in the figure.
   - “HO2S1 (B1)” voltage goes above 0.6V at least once.
   - “HO2S1 (B1)” voltage goes below 0.3V at least once.
   - “HO2S1 (B1)” voltage never exceeds 1.0V.

cycle	1	2	3	4	5
HO2S1 MNTR (B1)	R-L-R-L-R-L-R-L-R-L-R				

R means HO2S1 MNTR (B1) indicates RICH
L means HO2S1 MNTR (B1) indicates LEAN

SEF217YA

Trigger	ENG SPEED	HO2S1 (B1)
	rpm	V
XXX	XXX	XXX
XXX	XXX	XXX
XXX	XXX	XXX
XXX	XXX	XXX
XXX	XXX	XXX
XXX	XXX	XXX
XXX	XXX	XXX
XXX	XXX	XXX
XXX	XXX	XXX
XXX	XXX	XXX
XXX	XXX	XXX
XXX	XXX	XXX

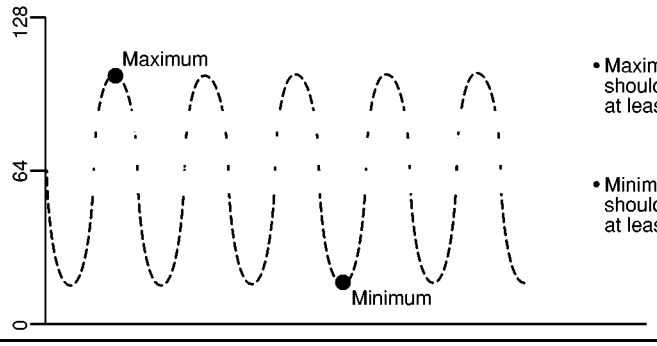

CAUTION:

- **Discard any heated oxygen sensor which has been dropped from a height of more than 0.5 m (19.7 in) onto a hard surface such as a concrete floor; use a new one.**
- **Before installing new oxygen sensor, clean exhaust system threads using Oxygen Sensor Thread Cleaner tool and approved anti-seize lubricant.**

Without CONSULT-II

1. Start engine and warm it up to normal operating temperature.
2. Set voltmeter probes between ECM terminal 49 (HO2S1 signal) and ground.
3. Check the following with engine speed held at 2,000 rpm constant under no load.
   - The voltage fluctuates between 0 to 0.3V and 0.6 to 1.0V more than 5 times within 10 seconds.
   - The maximum voltage is over 0.6V at least 1 time.
   - The minimum voltage is below 0.3V at least 1 time.
   - The voltage never exceeds 1.0V.

   1 time: 0 - 0.3V → 0.6 - 1.0V → 0 - 0.3V
   2 times: 0 - 0.3V → 0.6 - 1.0V → 0 - 0.3V → 0.6 - 1.0V → 0 - 0.3V

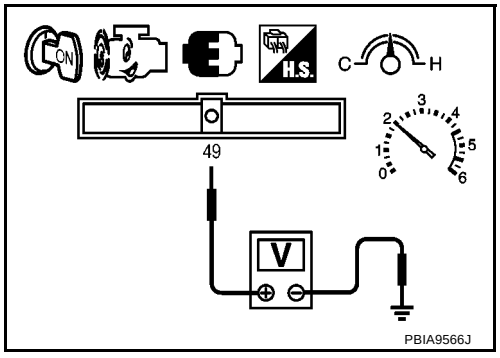

CAUTION:

- **Discard any heated oxygen sensor which has been dropped from a height of more than 0.5 m (19.7 in) onto a hard surface such as a concrete floor; use a new one.**
- **Before installing new oxygen sensor, clean exhaust system threads using Oxygen Sensor Thread Cleaner tool and approved anti-seize lubricant.**

Removal and Installation

BBS004BX

HEATED OXYGEN SENSOR 1

Refer to EM-124, "EXHAUST MANIFOLD" .

DTC P0134 HO2S1

PFP:22690

Component Description

BBS004BY

The heated oxygen sensor 1 is placed into the exhaust manifold. It detects the amount of oxygen in the exhaust gas compared to the outside air. The heated oxygen sensor 1 has a closed-end tube made of ceramic zirconia. The zirconia generates voltage from approximately 1V in richer conditions to 0V in leaner conditions. The heated oxygen sensor 1 signal is sent to the ECM. The ECM adjusts the injection pulse duration to achieve the ideal air-fuel ratio. The ideal air-fuel ratio occurs near the radical change from 1V to 0V.

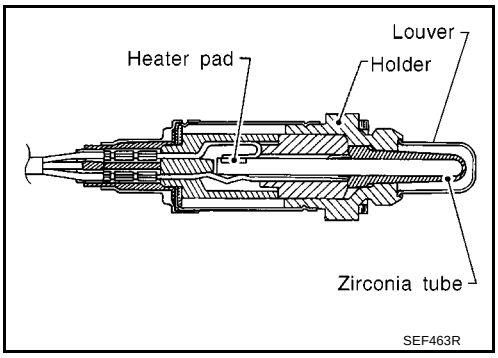

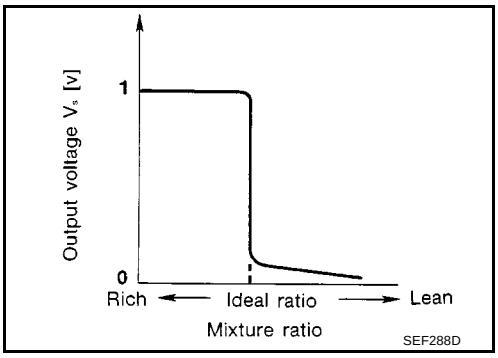

CONSULT-II Reference Value in Data Monitor Mode

BBS004BZ

Specification data are reference values.

MONITOR ITEM	CONDITION		SPECIFICATION
HO2S1 (B1)	● Engine: After warming up	Maintaining engine speed at 2,000 rpm.	0 - 0.3V ←→ Approx. 0.6 - 1.0V
HO2S1 MNTR (B1)			LEAN ←→ RICH Changes more than 5 times during 10 seconds.

On Board Diagnosis Logic

BBS004C0

Under the condition in which the heated oxygen sensor 1 signal is not input, the ECM circuits will read a continuous approximately 0.3V. Therefore, for this diagnosis, the time that output voltage is within 200 to 400 mV range is monitored, and the diagnosis checks that this time is not inordinately long.

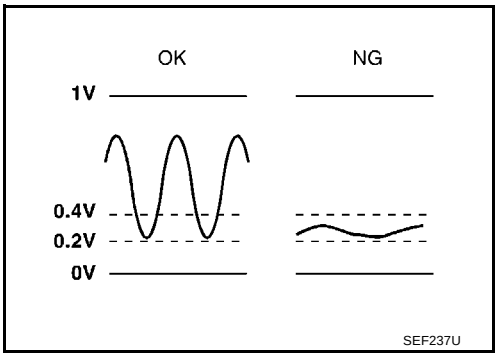

DTC No.	Trouble diagnosis name	DTC detecting condition	Possible cause
P0134 0134	Heated oxygen sensor 1 circuit no activity detected	The voltage from the sensor is constantly approx. 0.3V.	● Harness or connectors (The sensor circuit is open or shorted.) ● Heated oxygen sensor 1

DTC Confirmation Procedure

BBS004C1

CAUTION:
Always drive vehicle at a safe speed.

NOTE:
If DTC Confirmation Procedure has been previously conducted, always turn ignition switch OFF and wait at least 10 seconds before conducting the next test.

TESTING CONDITION:
Before performing the following procedure, confirm that battery voltage is more than 11V at idle.

WITH CONSULT-II

1. Start engine and warm it up to normal operating temperature.
2. Select “HO2S1 (B1) P0134” of “HO2S1” in “DTC WORK SUPPORT” mode with CONSULT-II.
3. Touch “START”.
4. Let it idle for at least 3 minutes.

   NOTE:
   Never raise engine speed above 3,600 rpm after this step. If the engine speed limit is exceeded, return to step 4.

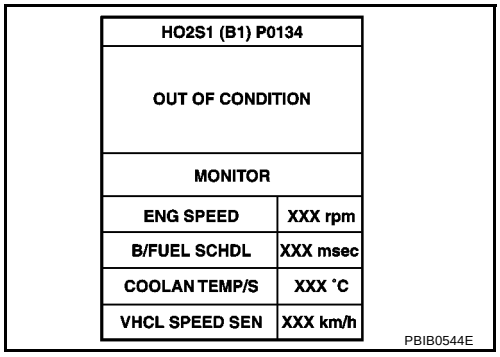

5. When the following conditions are met, “TESTING” will be displayed on the CONSULT-II screen. Maintain the conditions continuously until “TESTING” changes to “COMPLETED”. (It will take approximately 10 to 60 seconds.)

ENG SPEED	A/T: 1,300 - 3,500 rpm M/T: 1,800 - 4,250 rpm
VHCL SPEED SE	More than 64 km/h (40 MPH)
B/FUEL SCHDL	A/T: 2.8 - 11.2 msec M/T: 2.0 - 10.2 msec
Shift lever	Suitable position

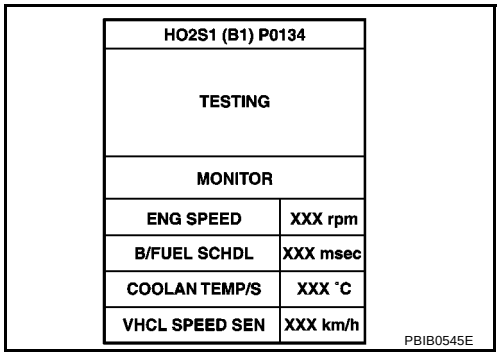

If “TESTING” is not displayed after 5 minutes, retry from step 2.

6. Make sure that “OK” is displayed after touching “SELF-DIAG RESULTS”. If “NG” is displayed, refer to EC-981, "Diagnostic Procedure" .

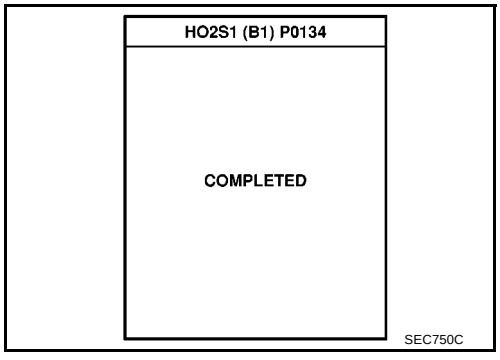

Overall Function Check

BBS004C2

Use this procedure to check the overall function of the heated oxygen sensor 1 circuit. During this check, a 1st trip DTC might not be confirmed.

WITH GST

1. Start engine and warm it up to normal operating temperature.
2. Set voltmeter probes between ECM terminal 49 (HO2S1 signal) and ground.
3. Check the following with engine speed held at 2,000 rpm constant under no load.

- The voltage does not remain in the range of 0.2 to 0.4V.

4. If NG, go to EC-981, "Diagnostic Procedure" .

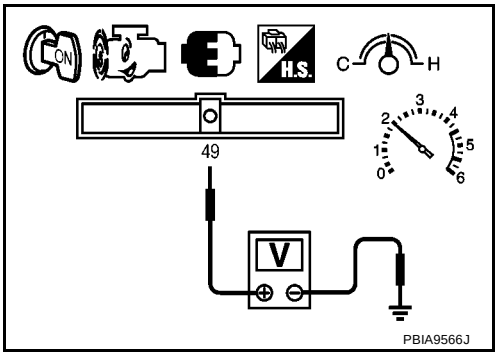

Wiring Diagram

BBS004C3

EC-HO2S1-01

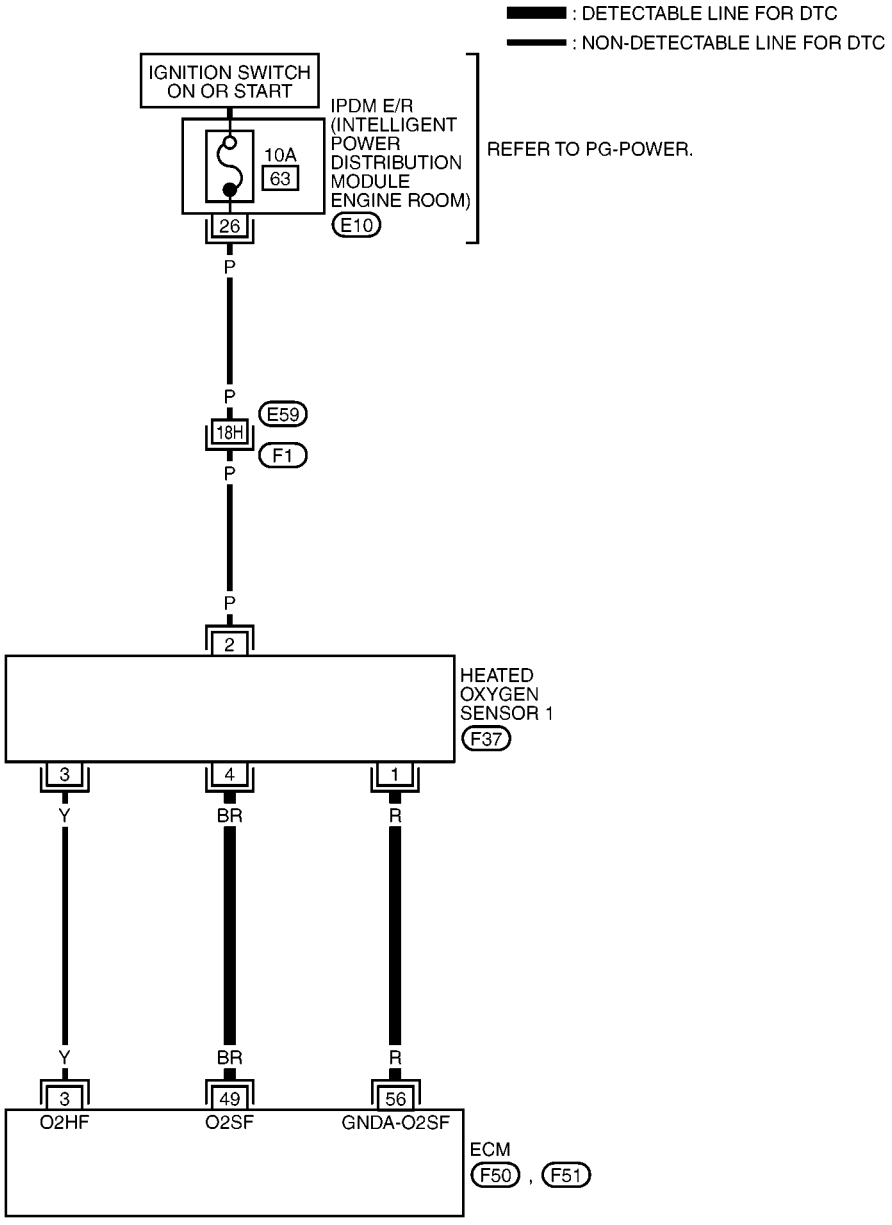

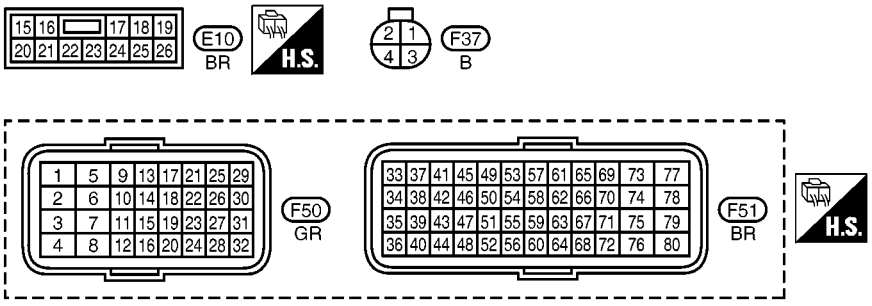

REFER TO THE FOLLOWING.
F1 - SUPER MULTIPLE JUNCTION (SMJ)

MBWA1461E

Specification data are reference values and are measured between each terminal and ground.
Pulse signal is measured by CONSULT-II.

CAUTION:
Do not use ECM ground terminals when measuring input/output voltage. Doing so may result in damage to the ECM's transistor. Use a ground other than ECM terminals, such as the ground.

TERMINAL NO.	WIRE COLOR	ITEM	CONDITION	DATA (DC Voltage)
3	Y	Heated oxygen sensor 1 heater	**[Engine is running]** ● **Warm-up condition** ● Engine speed: Below 3,600 rpm	Approximately 10V★ 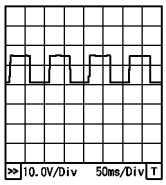 PBIA8148J
			[Ignition switch: ON] ● Engine stopped **[Engine is running]** ● Engine speed: Above 3,600 rpm	BATTERY VOLTAGE (11 - 14V)
49	BR	Heated oxygen sensor 1	**[Engine is running]** ● **Warm-up condition** ● Engine speed: 2,000 rpm	0 - Approximately 1.0V (Periodically change)
56	R	Sensor ground (Heated oxygen sensor 1)	**[Engine is running]** ● **Warm-up condition** ● Idle speed	Approximately 0V

★: Average voltage for pulse signal (Actual pulse signal can be confirmed by oscilloscope.)

Diagnostic Procedure

BBS004C4

1. CHECK GROUND CONNECTIONS

1. Turn ignition switch OFF.
2. Loosen and retighten ground screws on the body.
   Refer to EC-924, "Ground Inspection" .

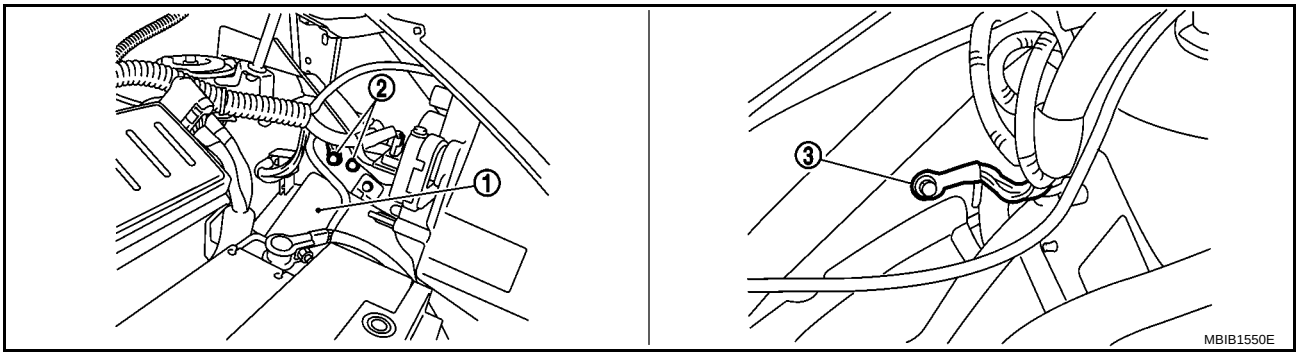

1. IPDM E/R
2. Body ground
3. Body ground

OK or NG

OK >> GO TO 2.
NG >> Repair or replace ground connections.

2. CHECK HO2S1 GROUND CIRCUIT FOR OPEN AND SHORT

1. Disconnect heated oxygen sensor 1 harness connector (1).
- ⇦: Vehicle front
2. Disconnect ECM harness connector.
3. Check harness continuity between HO2S1 terminal 1 and ECM terminal 56.
   Refer to Wiring Diagram.

   Continuity should exist.

4. Also check harness for short to ground and short to power.

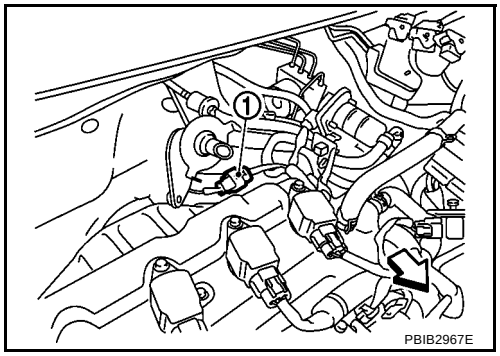

OK or NG

OK >> GO TO 3.
NG >> Repair open circuit or short to ground or short to power in harness or connectors.

3. CHECK HO2S1 INPUT SIGNAL CIRCUIT FOR OPEN AND SHORT

1. Check harness continuity between HO2S1 terminal 4 and ECM terminal 49.
   Refer to Wiring Diagram.

   Continuity should exist.

2. Check harness continuity between ECM terminal 49 or HO2S1 terminal 4 and ground.
   Refer to Wiring Diagram.

   Continuity should not exist.

3. Also check harness for short to power.

OK or NG

OK >> GO TO 4.
NG >> Repair open circuit or short to ground or short to power in harness or connectors.

4. CHECK HEATED OXYGEN SENSOR 1

Refer to EC-983, "Component Inspection" .

OK or NG

OK >> GO TO 5.
NG >> Replace heated oxygen sensor 1.

5. CHECK INTERMITTENT INCIDENT

Refer to EC-917, "TROUBLE DIAGNOSIS FOR INTERMITTENT INCIDENT" .

>> **INSPECTION END**

Component Inspection

BBS004C5

HEATED OXYGEN SENSOR 1

With CONSULT-II

1. Start engine and warm it up to normal operating temperature.
2. Select “MANU TRIG” and adjust “TRIGGER POINT” to 100% in “DATA MONITOR” mode with CONSULT-II.
3. Select “HO2S1 (B1)” and “HO2S1 MNTR (B1)”.
4. Hold engine speed at 2,000 rpm under no load during the following steps.
5. Touch “RECORD” on CONSULT-II screen.

DATA MONITOR	
MONITOR	NO DTC
ENG SPEED	XXX rpm
MAS A/F SE-B1	XXX V
COOLAN TEMP/S	XXX °C
HO2S1 (B1)	XXX V
HO2S1 MNTR (B1)	LEAN

SEF646Y

6. Check the following.
   - “HO2S1 MNTR (B1)” in “DATA MONITOR” mode changes from “RICH” to “LEAN” to “RICH” more than 5 times in 10 seconds.
     5 times (cycles) are counted as shown in the figure.
   - “HO2S1 (B1)” voltage goes above 0.6V at least once.
   - “HO2S1 (B1)” voltage goes below 0.3V at least once.
   - “HO2S1 (B1)” voltage never exceeds 1.0V.

cycle	1	2	3	4	5
HO2S1 MNTR (B1)	R-L-R-L-R-L-R-L-R-L-R				

R means HO2S1 MNTR (B1) indicates RICH
L means HO2S1 MNTR (B1) indicates LEAN

SEF217YA

Trigger	ENG SPEED	HO2S1 (B1)
	rpm	V
XXX	XXX	XXX
XXX	XXX	XXX
XXX	XXX	XXX
XXX	XXX	XXX
XXX	XXX	XXX
XXX	XXX	XXX
XXX	XXX	XXX
XXX	XXX	XXX
XXX	XXX	XXX
XXX	XXX	XXX
XXX	XXX	XXX
XXX	XXX	XXX

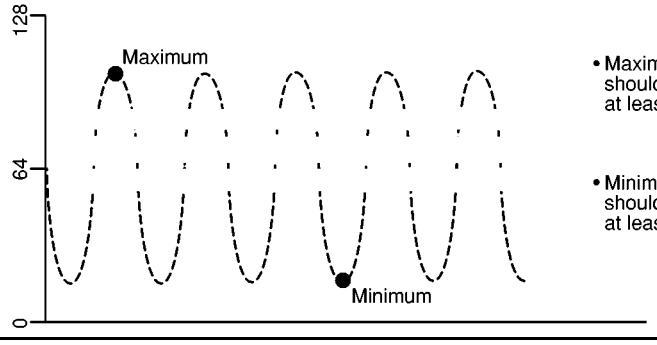

CAUTION:

- **Discard any heated oxygen sensor which has been dropped from a height of more than 0.5 m (19.7 in) onto a hard surface such as a concrete floor; use a new one.**
- **Before installing new oxygen sensor, clean exhaust system threads using Oxygen Sensor Thread Cleaner tool and approved anti-seize lubricant.**

Without CONSULT-II

1. Start engine and warm it up to normal operating temperature.
2. Set voltmeter probes between ECM terminal 49 (HO2S1 signal) and ground.

3. Check the following with engine speed held at 2,000 rpm constant under no load.
   - The voltage fluctuates between 0 to 0.3V and 0.6 to 1.0V more than 5 times within 10 seconds.
   - The maximum voltage is over 0.6V at least 1 time.
   - The minimum voltage is below 0.3V at least 1 time.
   - The voltage never exceeds 1.0V.

   1 time: 0 - 0.3V → 0.6 - 1.0V → 0 - 0.3V
   2 times: 0 - 0.3V → 0.6 - 1.0V → 0 - 0.3V → 0.6 - 1.0V → 0 - 0.3V

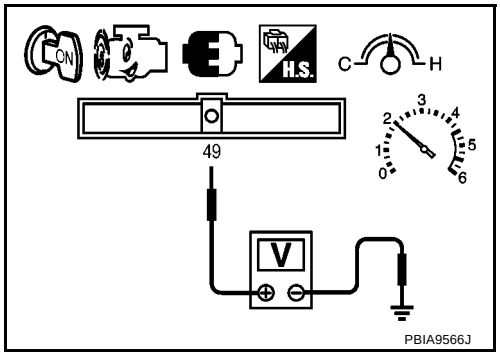

CAUTION:

- **Discard any heated oxygen sensor which has been dropped from a height of more than 0.5 m (19.7 in) onto a hard surface such as a concrete floor; use a new one.**
- **Before installing new oxygen sensor, clean exhaust system threads using Oxygen Sensor Thread Cleaner tool and approved anti-seize lubricant.**

Removal and Installation

BBS004C6

HEATED OXYGEN SENSOR 1

Refer to EM-124, "EXHAUST MANIFOLD" .

DTC P0135 HO2S1 HEATER

PFP:23710

Description

BBS004C7

SYSTEM DESCRIPTION

Sensor	Input Signal to ECM	ECM function	Actuator
Camshaft position sensor (PHASE) Crankshaft position sensor (POS)	Engine speed	Heated oxygen sensor 1 heater control	Heated oxygen sensor 1 heater
Engine coolant temperature sensor	Engine coolant temperature		

The ECM performs ON/OFF duty control of the heated oxygen sensor 1 heater corresponding to the engine speed and engine coolant temperature. The duty percent varies with engine coolant temperature when engine is started.

OPERATION

Engine speed	Heated oxygen sensor 1 heater
Above 3,600 rpm	OFF
Below 3,600 rpm after warming up	ON

CONSULT-II Reference Value in Data Monitor Mode

BBS004C8

Specification data are reference values.

MONITOR ITEM	CONDITION	SPECIFICATION
HO2S1 HTR (B1)	● Engine: After warming up ● Engine speed: Below 3,600 rpm	ON
	● Engine speed: Above 3,600 rpm	OFF
O2SEN HTR DTY	● Engine coolant temperature when engine started: More than 80°C (176°F) ● Engine speed: Below 3,600 rpm	Approx. 30%

On Board Diagnosis Logic

BBS004C9

DTC No.	Trouble diagnosis name	DTC detecting condition	Possible cause
P0135 0135	Heated oxygen sensor 1 heater control circuit	The current amperage in the heated oxygen sensor 1 heater circuit is out of the normal range. (An excessively low voltage signal is sent to ECM through the heated oxygen sensor 1 heater.)	● Harness or connectors (The heated oxygen sensor 1 heater circuit is open or shorted.) ● Heated oxygen sensor 1 heater

DTC Confirmation Procedure

BBS004CA

NOTE:
If DTC Confirmation Procedure has been previously conducted, always turn ignition switch OFF and wait at least 10 seconds before conducting the next test.
TESTING CONDITION:
Before performing the following procedure, confirm that battery voltage is between 11V and 16V at idle.

WITH CONSULT-II

1. Turn ignition switch ON.
2. Select “DATA MONITOR” mode with CONSULT-II.
3. Wait at least 5 seconds.
4. If 1st trip DTC is detected, go to EC-988, "Diagnostic Procedure"
.

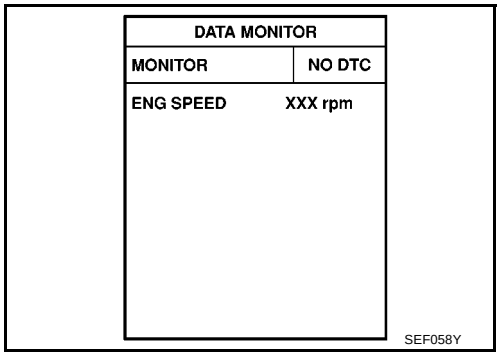

WITH GST

Follow the procedure “WITH CONSULT-II” above.

Wiring Diagram

BBS004CB

EC-HO2S1H-01

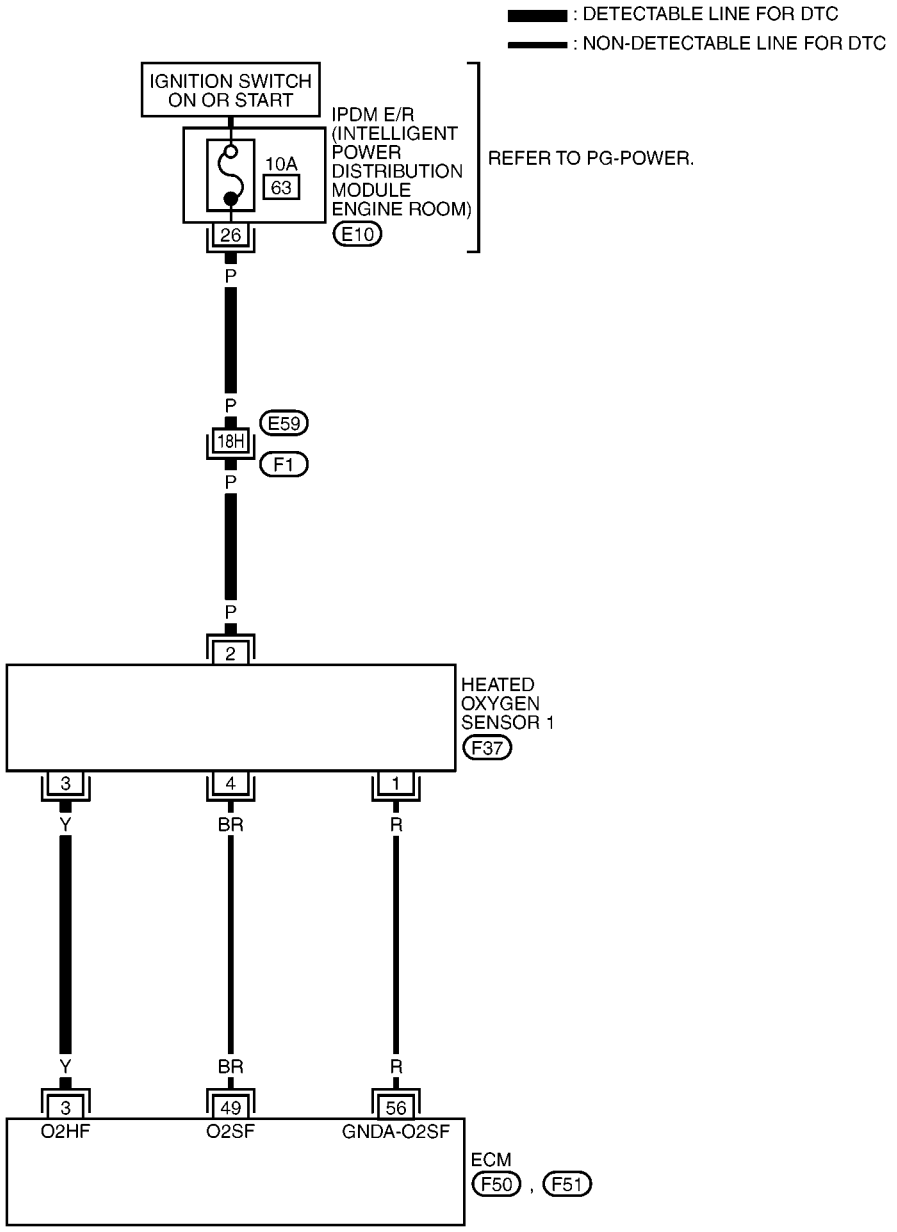

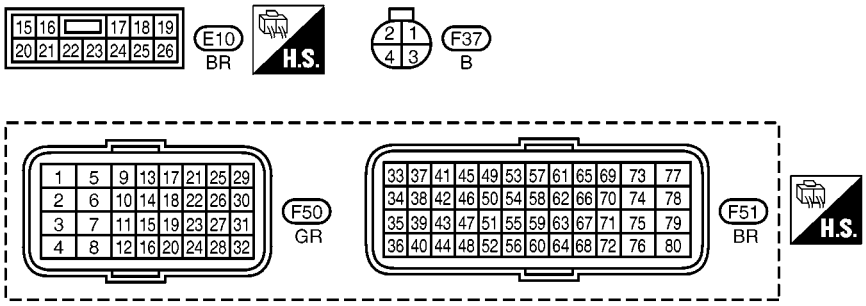

REFER TO THE FOLLOWING.
F1 - SUPER MULTIPLE JUNCTION (SMJ)

MBWA1462E

Specification data are reference values and are measured between each terminal and ground.
Pulse signal is measured by CONSULT-II.

CAUTION:
Do not use ECM ground terminals when measuring input/output voltage. Doing so may result in damage to the ECM's transistor. Use a ground other than ECM terminals, such as the ground.

TERMINAL NO.	WIRE COLOR	ITEM	CONDITION	DATA (DC Voltage)
3	Y	Heated oxygen sensor 1 heater	**[Engine is running]** ● **Warm-up condition** ● Engine speed: Below 3,600 rpm	Approximately 10V★ 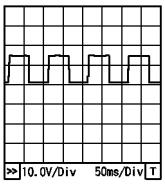 PBIA8148J
			[Ignition switch: ON] ● Engine stopped **[Engine is running]** ● Engine speed: Above 3,600 rpm	BATTERY VOLTAGE (11 - 14V)
49	BR	Heated oxygen sensor 1	**[Engine is running]** ● **Warm-up condition** ● Engine speed: 2,000 rpm	0 - Approximately 1.0V (Periodically change)
56	R	Sensor ground (Heated oxygen sensor 1)	**[Engine is running]** ● Idle speed	Approximately 0V

★: Average voltage for pulse signal (Actual pulse signal can be confirmed by oscilloscope.)

Diagnostic Procedure

BBS004CC

1. CHECK GROUND CONNECTIONS

1. Turn ignition switch OFF.
2. Loosen and retighten ground screws on the body.
   Refer to EC-924, "Ground Inspection" .

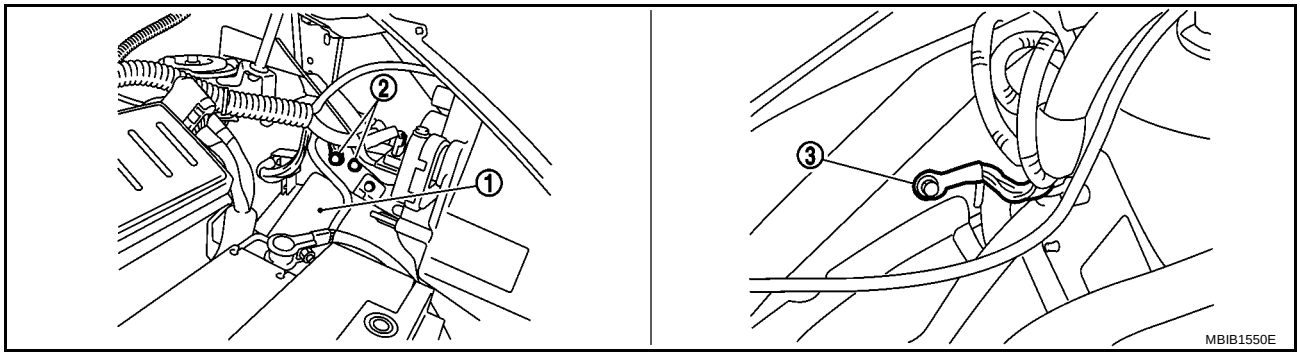

1. IPDM E/R
2. Body ground
3. Body ground

OK or NG

OK >> GO TO 2.
NG >> Repair or replace ground connections.

2. CHECK HO2S1 POWER SUPPLY CIRCUIT

1. Disconnect heated oxygen sensor 1 harness connector (1).
- ⇦: Vehicle front
2. Turn ignition switch ON.

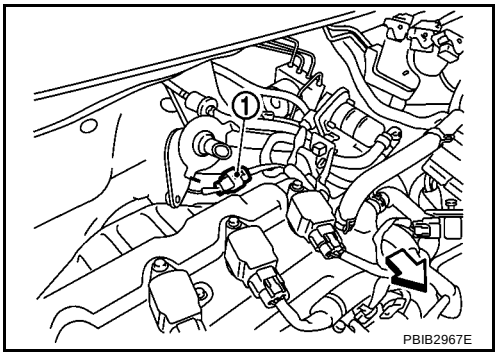

3. Check voltage between HO2S1 terminal 2 and ground with CONSULT-II or tester.

Voltage: Battery voltage

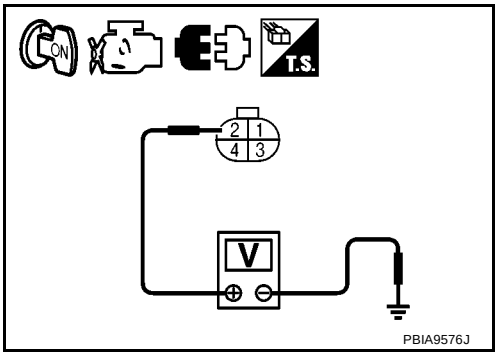

OK or NG

OK >> GO TO 4.
NG >> GO TO 3.

3. DETECT MALFUNCTIONING PART

Check the following.

- Harness connectors E59, F1
- IPDM E/R connector E10
- 10A fuse
- Harness for open or short between heated oxygen sensor 1 and fuse

>> Repair open circuit or short to ground or short to power in harness or connectors.

4. CHECK HO2S1 OUTPUT SIGNAL CIRCUIT FOR OPEN AND SHORT

1. Turn ignition switch OFF.
2. Disconnect ECM harness connector.
3. Check harness continuity between ECM terminal 3 and HO2S1 terminal 3.
Refer to Wiring Diagram.

Continuity should exist.

4. Also check harness for short to ground and short to power.

OK or NG

OK >> GO TO 5.
NG >> Repair open circuit or short to ground or short to power in harness or connectors.

5. CHECK HEATED OXYGEN SENSOR 1 HEATER

Refer to EC-990, "Component Inspection" .

OK or NG

OK >> GO TO 6.
NG >> Replace heated oxygen sensor 1.

6. CHECK INTERMITTENT INCIDENT

Refer to EC-917, "TROUBLE DIAGNOSIS FOR INTERMITTENT INCIDENT" .

>> **INSPECTION END**

Component Inspection

BBS004CD

HEATED OXYGEN SENSOR 1 HEATER

1. Check resistance between HO2S1 terminals as follows.

Terminal No.	Resistance
2 and 3	3.4 - 4.4 Ω [at 25°C (77°F)]
1 and 2, 3, 4	∞ Ω (Continuity should not exist)
4 and 1, 2, 3	

2. If NG, replace heated oxygen sensor 1.

CAUTION:

- **Discard any heated oxygen sensor which has been dropped from a height of more than 0.5 m (19.7 in) onto a hard surface such as a concrete floor; use a new one.**
- **Before installing new oxygen sensor, clean exhaust system threads using Oxygen Sensor Thread Cleaner tool and approved anti-seize lubricant.**

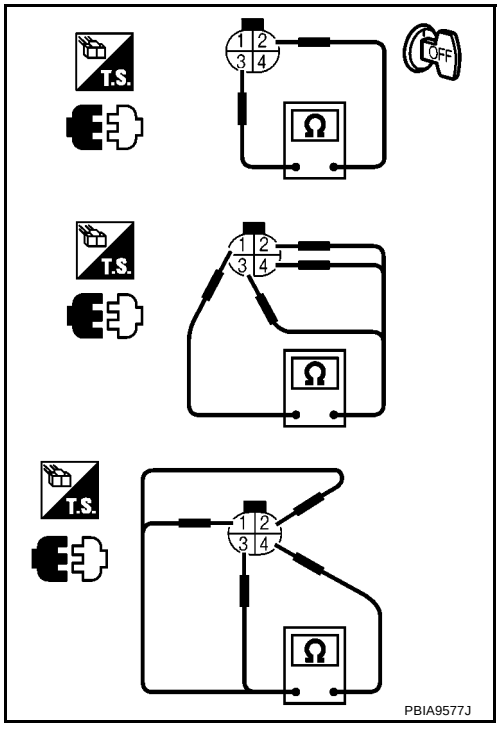

Removal and Installation

BBS004CE

HEATED OXYGEN SENSOR 1

Refer to EM-124, "EXHAUST MANIFOLD" .

DTC P0138 HO2S2

PFP:226A0

Component Description

BBS004CF

The heated oxygen sensor 2, after three way catalyst (manifold), monitors the oxygen level in the exhaust gas.
Even if switching characteristics of the heated oxygen sensor 1 are shifted, the air-fuel ratio is controlled to stoichiometric, by the signal from the heated oxygen sensor 2.
This sensor is made of ceramic zirconia. The zirconia generates voltage from approximately 1V in richer conditions to 0V in leaner conditions.
Under normal conditions the heated oxygen sensor 2 is not used for engine control operation.

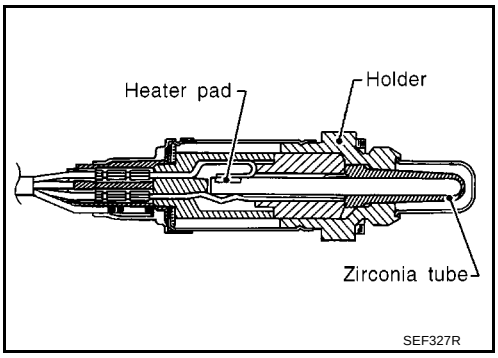

CONSULT-II Reference Value in Data Monitor Mode

BBS004CG

Specification data are reference values.

MONITOR ITEM	CONDITION	SPECIFICATION
HO2S2 (B1)	● Revving engine from idle to 3,000 rpm quickly after the following conditions are met. – Engine: After warming up – Keep the engine speed between 3,500 rpm and 4,000 rpm for 1 minute and idle for 1 minute under no load	0 - 0.3V ←→ Approx. 0.6 - 1.0V
HO2S2 MNTR (B1)		LEAN ←→ RICH

On Board Diagnosis Logic

BBS004CH

The heated oxygen sensor 2 has a much longer switching time between rich and lean than the heated oxygen sensor 1. The oxygen storage capacity before the three way catalyst (manifold) causes the longer switching time. To judge the malfunctions of heated oxygen sensor 2, ECM monitors whether the voltage is unusually high during the various driving condition such as fuel-cut.

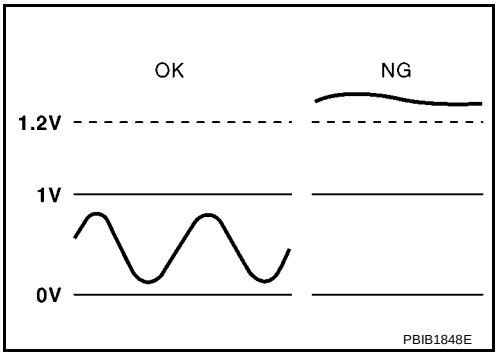

DTC No.	Trouble diagnosis name	DTC detecting condition	Possible cause
P0138 0138	Heated oxygen sensor 2 circuit high voltage	An excessively high voltage from the sensor is sent to ECM.	● Harness or connectors (The sensor circuit is open or shorted.) ● Heated oxygen sensor 2

DTC Confirmation Procedure

BBS004CI

CAUTION:

Always drive vehicle at a safe speed.

NOTE:

If DTC Confirmation Procedure has been previously conducted, always turn ignition switch OFF and wait at least 10 seconds before conducting the next test.

WITH CONSULT-II

1. Turn ignition switch ON and select “DATA MONITOR” mode with CONSULT-II.
2. Start engine and warm it up to the normal operating temperature.
3. Turn ignition switch OFF and wait at least 10 seconds.
4. Start engine and keep the engine speed between 3,500 and 4,000 rpm for at least 1 minute under no load.
5. Let engine idle for 2 minutes.
6. If 1st trip DTC is detected, go to EC-994, "Diagnostic Procedure".

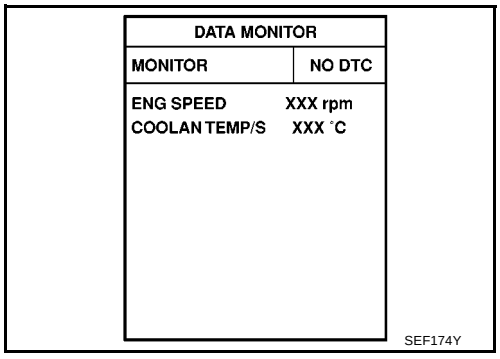

WITH GST

Follow the procedure “WITH CONSULT-II” above.

Wiring Diagram

BBS004CJ

EC-HO2S2-01

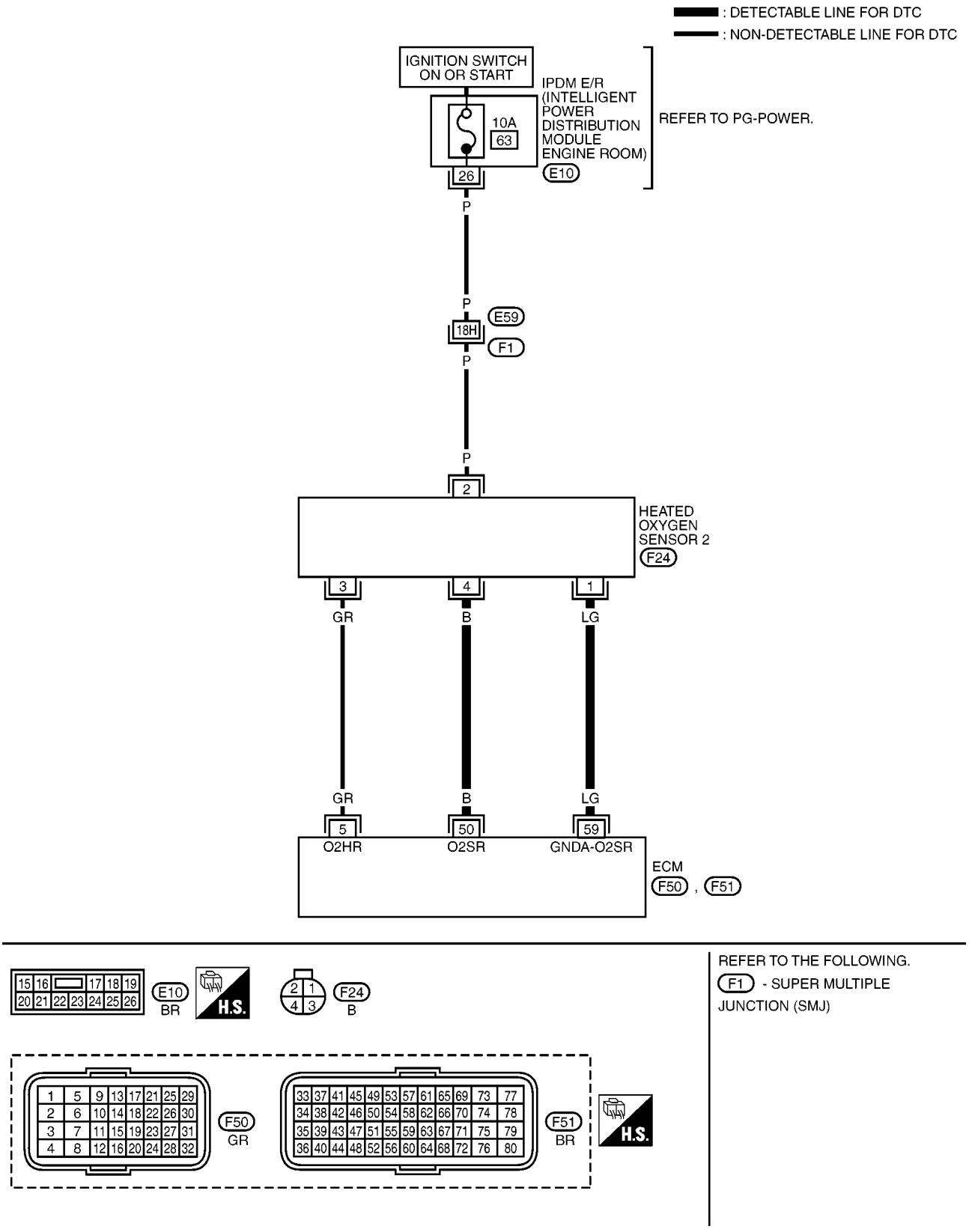

MBWA1463E

Specification data are reference values and are measured between each terminal and ground.
Pulse signal is measured by CONSULT-II.

CAUTION:
Do not use ECM ground terminals when measuring input/output voltage. Doing so may result in damage to the ECM's transistor. Use a ground other than ECM terminals, such as the ground.

TERMINAL NO.	WIRE COLOR	ITEM	CONDITION	DATA (DC Voltage)
5	GR	Heated oxygen sensor 2 heater	**[Engine is running]** ● Below 3,600 rpm after the following conditions are met. – Engine: After warming up – Keeping the engine speed between 3,500 and 4,000 rpm for 1 minute and at idle for 1 minute under no load	Approximately 10V★ 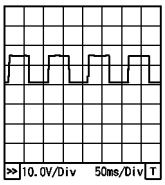 PBIA8148J
			[Ignition switch: ON] ● Engine stopped **[Engine is running]** ● Engine speed: Above 3,600 rpm	BATTERY VOLTAGE (11 - 14V)
50	B	Heated oxygen sensor 2	**[Engine is running]** ● Revving engine from idle to 3,000 rpm quickly after the following conditions are met. – Engine: After warming up – Keeping the engine speed between 3,500 and 4,000 rpm for 1 minute and at idle for 1 minute under no load.	0 - Approximately 1.0V
59	LG	Sensor ground (Heated oxygen sensor 2)	**[Engine is running]** ● **Warm-up condition** ● Idle speed	Approximately 0V

★: Average voltage for pulse signal (Actual pulse signal can be confirmed by oscilloscope.)

Diagnostic Procedure

BBS004CK

1. CHECK GROUND CONNECTIONS

1. Turn ignition switch OFF.
2. Loosen and retighten ground screws on the body.
   Refer to EC-924, "Ground Inspection" .

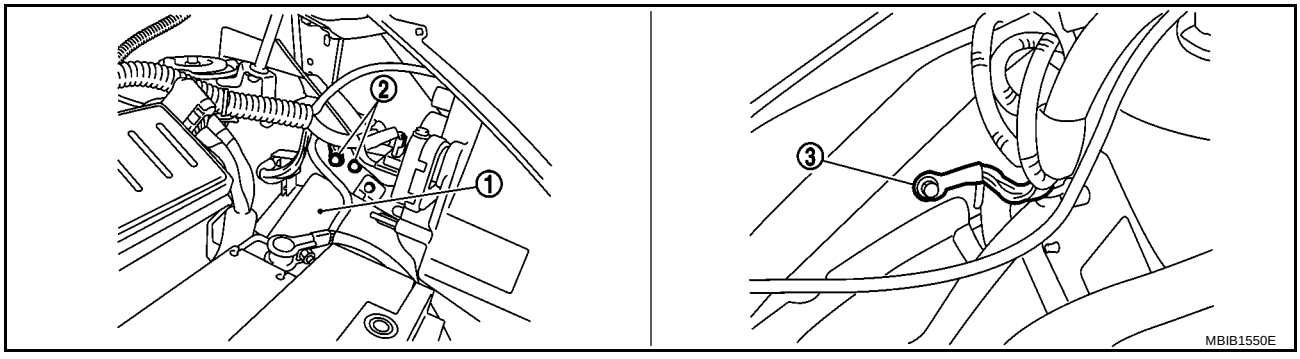

1. IPDM E/R
2. Body ground
3. Body ground

OK or NG

OK >> GO TO 2.
NG >> Repair or replace ground connections.

2. CHECK HO2S2 GROUND CIRCUIT FOR OPEN AND SHORT

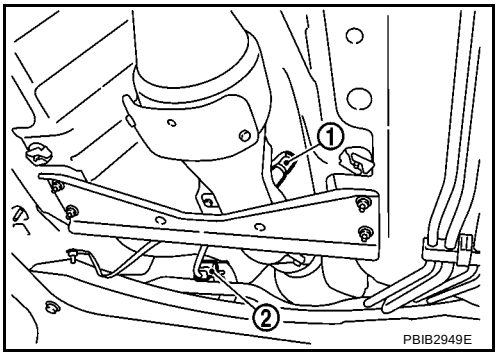

1. Disconnect heated oxygen sensor 2 harness connector (2).
- Heated oxygen sensor 2 (1)
2. Disconnect ECM harness connector.
3. Check harness continuity between HO2S2 terminal 1 and ECM terminal 59.
   Refer to Wiring Diagram.

   Continuity should exist.

4. Also check harness for short to ground and short to power.

OK or NG

OK >> GO TO 3.
NG >> Repair open circuit or short to ground or short to power in harness or connectors.

3. CHECK HO2S2 INPUT SIGNAL CIRCUIT FOR OPEN AND SHORT

1. Check harness continuity between HO2S2 terminal 4 ECM terminal 50.
   Refer to Wiring Diagram.

   Continuity should exist.

2. Check harness continuity between ECM terminal 50 or HO2S2 terminal 4 and ground.
   Refer to Wiring Diagram.

   Continuity should not exist.

3. Also check harness for short to power.

OK or NG

OK >> GO TO 4.
NG >> Repair open circuit or short to ground or short to power in harness or connectors.

4. CHECK HEATED OXYGEN SENSOR 2

Refer to EC-995, "Component Inspection" .

OK or NG

OK >> GO TO 5.
NG >> Replace heated oxygen sensor 2.

5. CHECK INTERMITTENT INCIDENT

Refer to EC-917, "TROUBLE DIAGNOSIS FOR INTERMITTENT INCIDENT" .

>> **INSPECTION END**

Component Inspection

BBS004CL

HEATED OXYGEN SENSOR 2

With CONSULT-II

1. Start engine and warm it up to the normal operating temperature.
2. Turn ignition switch OFF and wait at least 10 seconds.
3. Start engine and keep the engine speed between 3,500 and 4,000 rpm for at least 1 minute under no load.
4. Let engine idle for 1 minute.

5. Select “FUEL INJECTION” in “ACTIVE TEST” mode, and select “HO2S2 (B1)” as the monitor item with CONSULT-II.

ACTIVE TEST	
FUEL INJECTION	25 %
MONITOR	
ENG SPEED	XXX rpm
HO2S1 (B1)	XXX V
HO2S2 (B1)	XXX V
HO2S1 MNTR (B1)	RICH
HO2S2 MNTR (B1)	RICH

SEF662Y

6. Check “HO2S2 (B1)” at idle speed when adjusting “FUEL INJECTION” to ±25%.

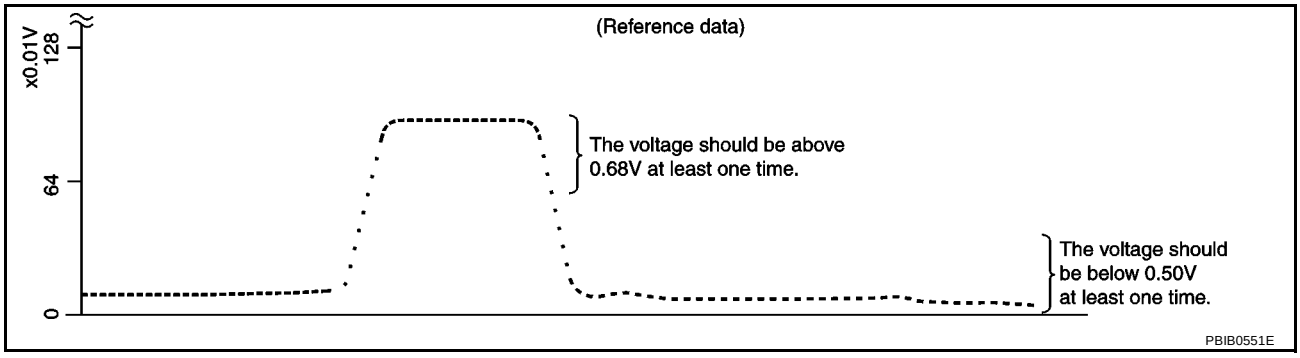

“HO2S2 (B1)” should be above 0.68V at least once when the “FUEL INJECTION” is +25%.
“HO2S2 (B1)” should be below 0.50V at least once when the “FUEL INJECTION” is –25%.

CAUTION:

- **Discard any heated oxygen sensor which has been dropped from a height of more than 0.5 m (19.7 in) onto a hard surface such as a concrete floor; use a new one.**
- **Before installing new oxygen sensor, clean exhaust system threads using Oxygen Sensor Thread Cleaner tool and approved anti-seize lubricant.**

Without CONSULT-II

1. Start engine and warm it up to the normal operating temperature.
2. Turn ignition switch OFF and wait at least 10 seconds.
3. Start engine and keep the engine speed between 3,500 and 4,000 rpm for at least 1 minute under no load.
4. Let engine idle for 1 minute.
5. Set voltmeter probes between ECM terminal 50 (HO2S2 signal) and ground.
6. Check the voltage when revving up to 4,000 rpm under no load at least 10 times.
   (Depress and release accelerator pedal as soon as possible.)
   The voltage should be above 0.68V at least once during this procedure.
   If the voltage is above 0.68V at step 6, step 7 is not necessary.
7. Keep vehicle idling for 10 minutes, then check voltage. Or check the voltage when coasting from 80 km/h (50 MPH) in D position with “OD” OFF (A/T), 3rd gear position (M/T).
   The voltage should be below 0.50V at least once during this procedure.

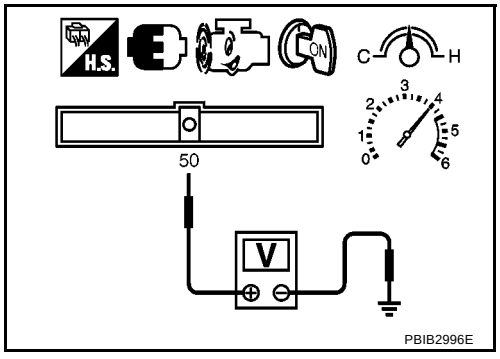

8. If NG, replace heated oxygen sensor 2.

CAUTION:

- **Discard any heated oxygen sensor which has been dropped from a height of more than 0.5 m (19.7 in) onto a hard surface such as a concrete floor; use a new one.**
- **Before installing new oxygen sensor, clean exhaust system threads using Oxygen Sensor Thread Cleaner tool and approved anti-seize lubricant.**

Removal and Installation

BBS004CM

HEATED OXYGEN SENSOR 2

Refer to EX-3, "EXHAUST SYSTEM" .

DTC P0139 HO2S2

PFP:226A0

Component Description

BBS004CN

The heated oxygen sensor 2, after three way catalyst (manifold), monitors the oxygen level in the exhaust gas.
Even if switching characteristics of the heated oxygen sensor 1 are shifted, the air-fuel ratio is controlled to stoichiometric, by the signal from the heated oxygen sensor 2.
This sensor is made of ceramic zirconia. The zirconia generates voltage from approximately 1V in richer conditions to 0V in leaner conditions.
Under normal conditions the heated oxygen sensor 2 is not used for engine control operation.

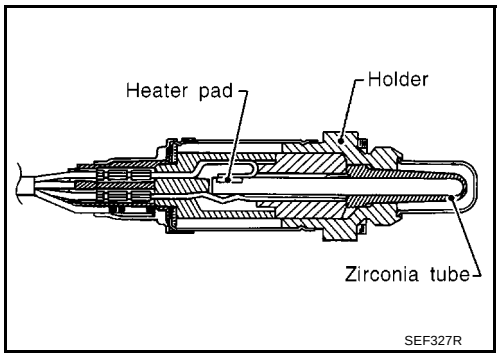

CONSULT-II Reference Value in Data Monitor Mode

BBS004CO

Specification data are reference values.

MONITOR ITEM	CONDITION	SPECIFICATION
HO2S2 (B1)	● Revving engine from idle to 3,000 rpm quickly after the following conditions are met. – Engine: After warming up – Keep the engine speed between 3,500 rpm and 4,000 rpm for 1 minute and idle for 1 minute under no load	0 - 0.3V ←→ Approx. 0.6 - 1.0V
HO2S2 MNTR (B1)		LEAN ←→ RICH

On Board Diagnosis Logic

BBS004CP

The heated oxygen sensor 2 has a much longer switching time between rich and lean than the heated oxygen sensor 1. The oxygen storage capacity before the three way catalyst (manifold) causes the longer switching time. To judge the malfunctions of heated oxygen sensor 2, ECM monitors whether the switching response of the sensor's voltage is faster than specified during the various driving condition such as fuel-cut.

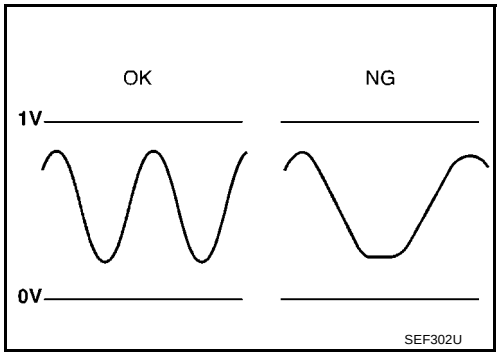

DTC No.	Trouble diagnosis name	DTC detecting condition	Possible cause
P0139 0139	Heated oxygen sensor 2 circuit slow response	It takes more time for the sensor to respond between rich and lean than the specified time.	● Harness or connectors (The sensor circuit is open or shorted.) ● Heated oxygen sensor 2 ● Fuel pressure ● Fuel injector ● Intake air leaks

DTC Confirmation Procedure

BBS004CQ

CAUTION:
Always drive vehicle at a safe speed.

NOTE:
- **"COMPLETED" will appear on CONSULT-II screen when all tests "COND1", "COND2" and "COND3" are completed.**
- If DTC Confirmation Procedure has been previously conducted, always turn ignition switch OFF and wait at least 10 seconds before conducting the next test.

TESTING CONDITION:
Never stop engine during this procedure. If the engine is stopped, retry this procedure from step 2 in Procedure for COND1.

WITH CONSULT-II

Procedure for COND1

For the best results, perform DTC WORK SUPPORT at a temperature of 0 to 30°(32 to 86°F).

1. Start engine and warm it up to normal operating temperature.
2. Turn ignition switch OFF and wait at least 10 seconds.
3. Start engine and keep the engine speed between 3,500 and 4,000 rpm for at least 1 minute under no load.
4. Let engine idle 1 minute.
5. Select "HO2S2 (B1) P0139" of "HO2S2" in "DTC WORK SUPPORT" mode with CONSULT-II.
6. Touch "START".
7. Start engine and let it idle for at least 30 seconds.
8. Rev engine up to 2,000 rpm two or three times quickly under no load.
   If "COMPLETED" appears on CONSULT-II screen, go to step 2 in Procedure for COND3.
   If "COMPLETED" does not appear on CONSULT-II screen, go to the following step.
9. When the following conditions are met, "TESTING" will be displayed at "COND1" on the CONSULT-II screen. Maintain the conditions continuously until "TESTING" changes to "COMPLETED". (It will take approximately 60 seconds.)

ENG SPEED	1,000 - 3,600 rpm
B/FUEL SCHDL	More than 1.0 msec
COOLAN TEMP/S	70 - 119 °C (158 - 246°F)
Shift level	Suitable position

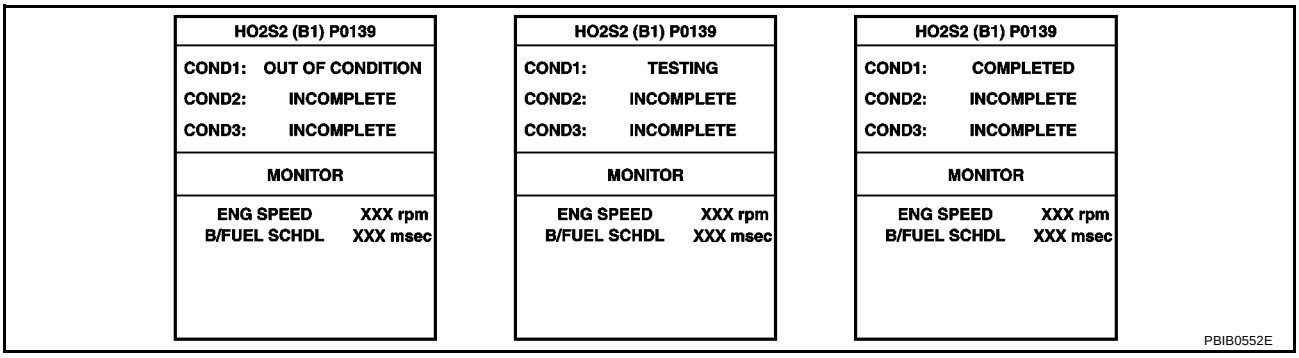

NOTE:
- **If "TESTING" is not displayed after 5 minutes, retry from step 2 in Procedure for COND1.**
- **If "COMPLETED" already appears at "COND2" on CONSULT-II screen before Procedure for COND2 is conducted, it is unnecessary to conduct step 1 in Procedure for COND2.**

Procedure for COND2

1. While driving, release accelerator pedal completely with “OD” OFF (A/T) from the above condition [step 9] until “INCOMPLETE” at “COND2” on CONSULT-II screen has turned to “COMPLETED”. (It will take approximately 4 seconds.)

NOTE:
If “COMPLETED” already appears at “COND3” on CONSULT-II screen before Procedure for COND3 is conducted, it is unnecessary to conduct step 1 in Procedure for COND3.

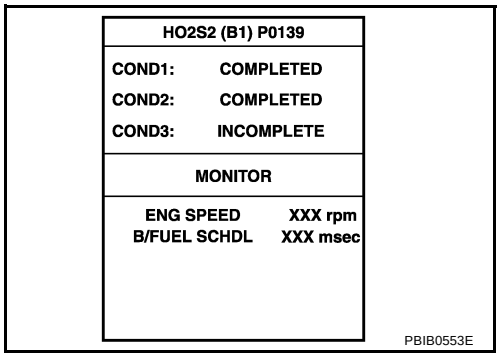

Procedure for COND3

1. Stop vehicle and let it idle until “INCOMPLETE” of “COND3” on CONSULT-II screen has turned to “COMPLETED”. (It will take a maximum of approximately 6 minutes.)
2. Make sure that “OK” is displayed after touching “SELF-DIAG RESULTS”.
   If “NG” is displayed, refer to EC-1002, "Diagnostic Procedure" .
   If “CAN NOT BE DIAGNOSED” is displayed, perform the following.

a. Turn ignition switch OFF and leave the vehicle in a cool place (soak the vehicle).
b. Turn ignition switch ON and select “COOLAN TEMP/S” in “DATA MONITOR” mode with CONSULT-II.
c. Start engine and warm it up while monitoring “COOLAN TEMP/S” indication on CONSULT-II.
d. When “COOLAN TEMP/S” indication reaches to 70°(158°F), go to Procedure for COND1 step 3.

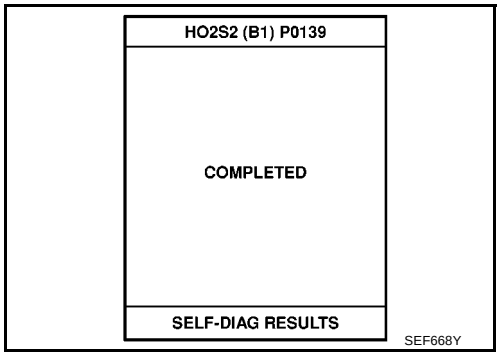

Overall Function Check

BBS004CR

Use this procedure to check the overall function of the heated oxygen sensor 2 circuit. During this check, a 1st trip DTC might not be confirmed.

WITH GST

1. Start engine and warm it up to the normal operating temperature.
2. Turn ignition switch OFF and wait at least 10 seconds.
3. Start engine and keep the engine between 3,500 and 4,000 rpm for at least 1 minute under no load.
4. Let engine idle for 1 minute.
5. Set voltmeter probes between ECM terminal 50 (HO2S2 signal) and ground.
6. Check the voltage when revving up to 4,000 rpm under no load at least 10 times.
   (Depress and release accelerator pedal as soon as possible.)
   A change of voltage should be more than 0.06V for 1 second during this procedure.
   If the voltage can be confirmed in step 6, step 7 is not necessary.
7. Keep vehicle at idling for 10 minutes, then check the voltage. Or check the voltage when coasting from 80 km/h (50 MPH) in D position with “OD” OFF (A/T), 3rd gear position (M/T).
   A change of voltage should be more than 0.06V for 1 second during this procedure.
8. If NG, go to EC-1002, "Diagnostic Procedure" .

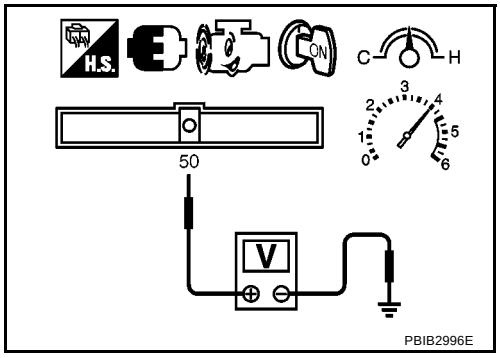

Wiring Diagram

BBS004CS

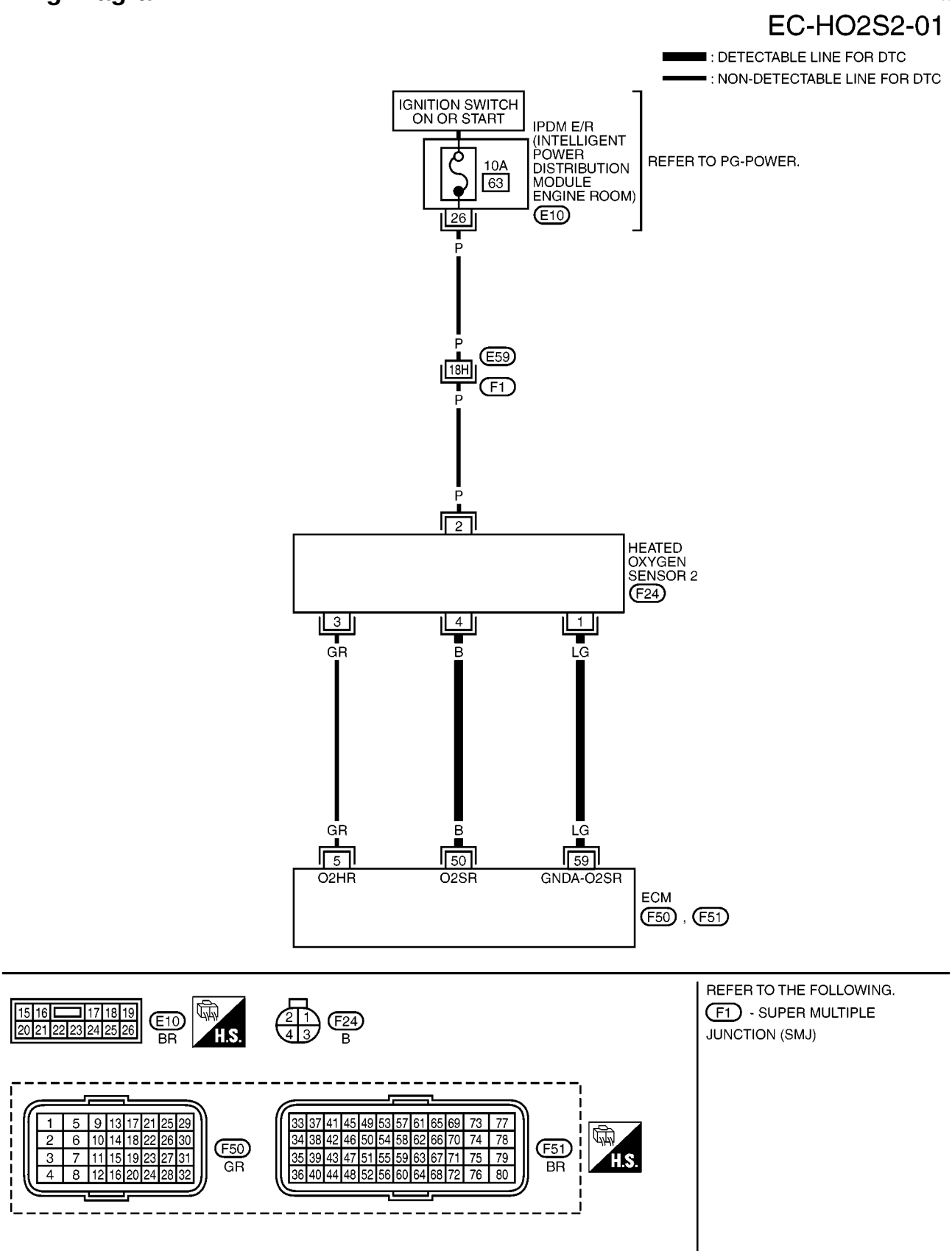

Specification data are reference values and are measured between each terminal and ground.
Pulse signal is measured by CONSULT-II.

CAUTION:
Do not use ECM ground terminals when measuring input/output voltage. Doing so may result in damage to the ECM's transistor. Use a ground other than ECM terminals, such as the ground.

TERMINAL NO.	WIRE COLOR	ITEM	CONDITION	DATA (DC Voltage)
5	GR	Heated oxygen sensor 2 heater	**[Engine is running]** ● Below 3,600 rpm after the following conditions are met. – Engine: After warming up – Keeping the engine speed between 3,500 and 4,000 rpm for 1 minute and at idle for 1 minute under no load	Approximately 10V★ 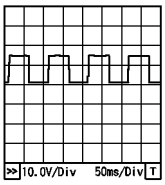 PBIA8148J
			[Ignition switch: ON] ● Engine stopped **[Engine is running]** ● Engine speed: Above 3,600 rpm	BATTERY VOLTAGE (11 - 14V)
50	B	Heated oxygen sensor 2	**[Engine is running]** ● Revving engine from idle to 3,000 rpm quickly after the following conditions are met. – Engine: After warming up – Keeping the engine speed between 3,500 and 4,000 rpm for 1 minute and at idle for 1 minute under no load.	0 - Approximately 1.0V
59	LG	Sensor ground (Heated oxygen sensor 2)	**[Engine is running]** ● **Warm-up condition** ● Idle speed	Approximately 0V

★: Average voltage for pulse signal (Actual pulse signal can be confirmed by oscilloscope.)

Diagnostic Procedure

BBS004CT

1. CHECK GROUND CONNECTIONS

1. Turn ignition switch OFF.
2. Loosen and retighten ground screws on the body.
   Refer to EC-924, "Ground Inspection" .

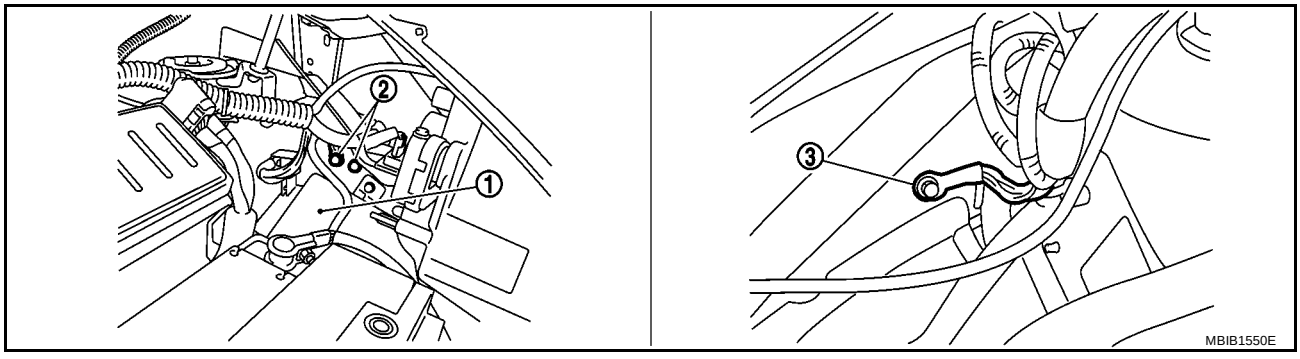

1. IPDM E/R
2. Body ground
3. Body ground

OK or NG

OK >> GO TO 2.
NG >> Repair or replace ground connections.

2. CLEAR THE SELF-LEARNING DATA

With CONSULT-II

1. Start engine and warm it up to normal operating temperature.
2. Select “SELF-LEARNING CONT” in “WORK SUPPORT” mode with CONSULT-II.
3. Clear the self-learning control coefficient by touching “CLEAR”.
4. Run engine for at least 10 minutes at idle speed.
   Is the 1st trip DTC P0171 or P0172 detected?
   Is it difficult to start engine?

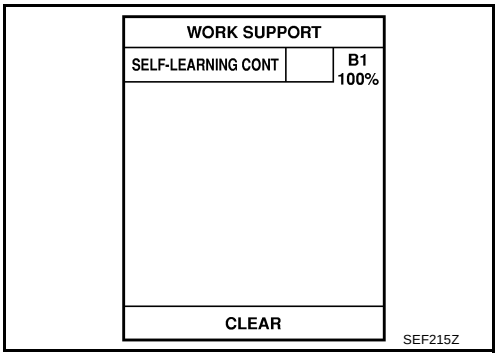

Without CONSULT-II

1. Start engine and warm it up to normal operating temperature.
2. Turn ignition switch OFF.
3. Disconnect mass air flow sensor (1) harness connector, and restart and run engine for at least 5 seconds at idle speed.
4. Stop engine and reconnect mass air flow sensor harness connector.
5. Make sure that DTC P0102 is displayed.
6. Erase the DTC memory. Refer to EC-841, "HOW TO ERASE EMISSION-RELATED DIAGNOSTIC INFORMATION" .
7. Make sure that DTC P0000 is displayed.
8. Run engine for at least 10 minutes at idle speed.
   Is the 1st trip DTC P0171 or P0172 detected?
   Is it difficult to start engine?

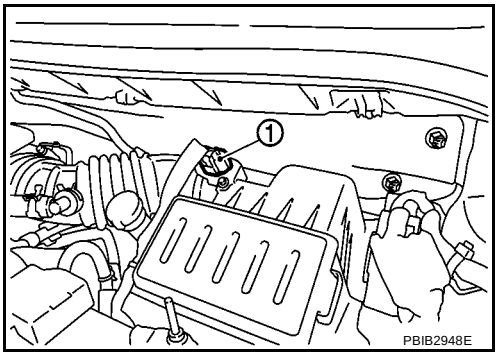

Yes or No

Yes >> Perform trouble diagnosis for DTC P0171 or P0172. Refer to EC-1012, "DTC P0171 FUEL INJECTION SYSTEM FUNCTION" or EC-1019, "DTC P0172 FUEL INJECTION SYSTEM FUNCTION" .

No >> GO TO 3.

3. CHECK HO2S2 GROUND CIRCUIT FOR OPEN AND SHORT

1. Turn ignition switch OFF.
2. Disconnect heated oxygen sensor 2 harness connector (2).
   – Heated oxygen sensor 2 (1)
3. Disconnect ECM harness connector.
4. Check harness continuity between and HO2S2 terminal 1 and ECM terminal 59.
   Refer to Wiring Diagram.

   Continuity should exist.

5. Also check harness for short to ground and short to power.

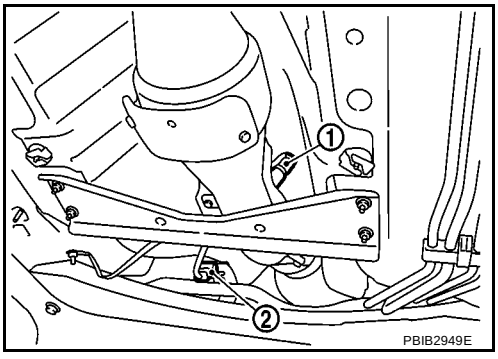

OK or NG

OK >> GO TO 4.

NG >> Repair open circuit or short to ground or short to power in harness or connectors.

4. CHECK HO2S2 INPUT SIGNAL CIRCUIT FOR OPEN AND SHORT

1. Check harness continuity between HO2S2 terminal 4 and ECM terminal 50.
   Refer to Wiring Diagram.

   Continuity should exist.

2. Check harness continuity between ECM terminal 50 or HO2S2 terminal 4 and ground.
   Refer to Wiring Diagram.

   Continuity should not exist.

3. Also check harness for short to power.

OK or NG

OK >> GO TO 5.
NG >> Repair open circuit or short to ground or short to power in harness or connectors.

5. CHECK HEATED OXYGEN SENSOR 2

Refer to EC-1004, "Component Inspection" .

OK or NG

OK >> GO TO 6.
NG >> Replace heated oxygen sensor 2.

6. CHECK INTERMITTENT INCIDENT

Refer to EC-917, "TROUBLE DIAGNOSIS FOR INTERMITTENT INCIDENT" .

>> **INSPECTION END**

Component Inspection

BBS004CU

HEATED OXYGEN SENSOR 2

With CONSULT-II

1. Start engine and warm it up to the normal operating temperature.
2. Turn ignition switch OFF and wait at least 10 seconds.
3. Start engine and keep the engine speed between 3,500 and 4,000 rpm for at least 1 minute under no load.
4. Let engine idle for 1 minute.
5. Select “FUEL INJECTION” in “ACTIVE TEST” mode, and select “HO2S2 (B1)” as the monitor item with CONSULT-II.

ACTIVE TEST	
FUEL INJECTION	25 %
MONITOR	
ENG SPEED	XXX rpm
HO2S1 (B1)	XXX V
HO2S2 (B1)	XXX V
HO2S1 MNTR (B1)	RICH
HO2S2 MNTR (B1)	RICH

SEF662Y

6. Check “HO2S2 (B1)” at idle speed when adjusting “FUEL INJECTION” to ±25%.

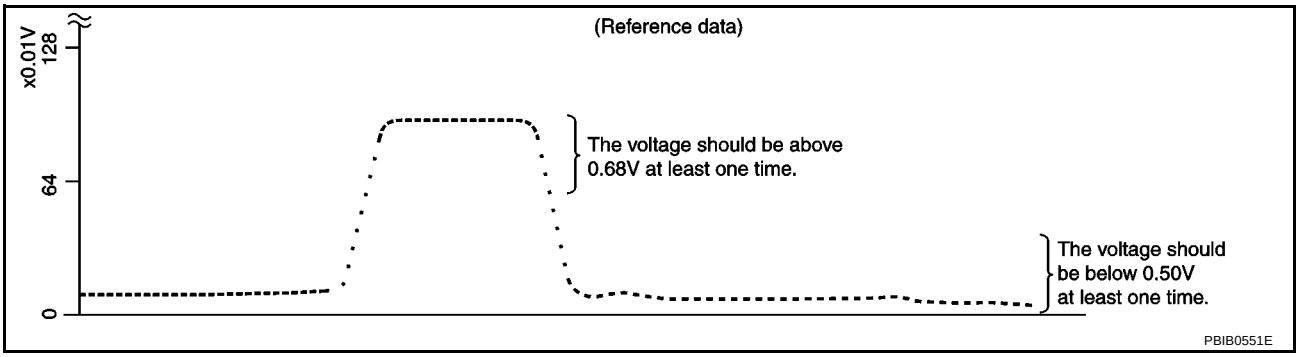

“HO2S2 (B1)” should be above 0.68V at least once when the “FUEL INJECTION” is +25%.
“HO2S2 (B1)” should be below 0.50V at least once when the “FUEL INJECTION” is –25%.

CAUTION:

- **Discard any heated oxygen sensor which has been dropped from a height of more than 0.5 m (19.7 in) onto a hard surface such as a concrete floor; use a new one.**
- **Before installing new oxygen sensor, clean exhaust system threads using Oxygen Sensor Thread Cleaner tool and approved anti-seize lubricant.**

Without CONSULT-II

1. Start engine and warm it up to the normal operating temperature.
2. Turn ignition switch OFF and wait at least 10 seconds.
3. Start engine and keep the engine speed between 3,500 and 4,000 rpm for at least 1 minute under no load.
4. Let engine idle for 1 minute.
5. Set voltmeter probes between ECM terminal 50 (HO2S2 signal) and ground.
6. Check the voltage when revving up to 4,000 rpm under no load at least 10 times.
   (Depress and release accelerator pedal as soon as possible.)
   The voltage should be above 0.68V at least once during this procedure.
   If the voltage is above 0.68V at step 6, step 7 is not necessary.
7. Keep vehicle idling for 10 minutes, then check voltage. Or check the voltage when coasting from 80 km/h (50 MPH) in D position with “OD” OFF (A/T), 3rd gear position (M/T).
   The voltage should be below 0.50V at least once during this procedure.

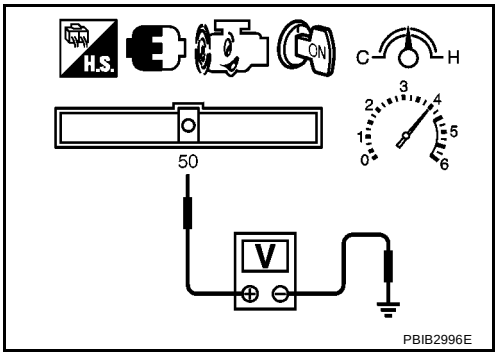

8. If NG, replace heated oxygen sensor 2.

CAUTION:

- **Discard any heated oxygen sensor which has been dropped from a height of more than 0.5 m (19.7 in) onto a hard surface such as a concrete floor; use a new one.**
- **Before installing new oxygen sensor, clean exhaust system threads using Oxygen Sensor Thread Cleaner tool and approved anti-seize lubricant.**

Removal and Installation

BBS004CV

HEATED OXYGEN SENSOR 2

Refer to EX-3, "EXHAUST SYSTEM"

DTC P0141 HO2S2 HEATER

PFP:23710

Description

BBS004CW

SYSTEM DESCRIPTION

Sensor	Input Signal to ECM	ECM Function	Actuator
Camshaft position sensor (PHASE)	Engine speed	Heated oxygen sensor 2 heater control	Heated oxygen sensor 2 heater
Crankshaft position sensor (POS)			
Engine coolant temperature sensor	Engine coolant temperature		
Mass air flow sensor	Amount of intake air		

The ECM performs ON/OFF control of the heated oxygen sensor 2 heater corresponding to the engine speed, amount of intake air and engine coolant temperature.

OPERATION

Engine speed	Heated oxygen sensor 2 heater
Above 3,600 rpm	OFF
● Below 3,600 rpm after the following conditions are met. – Engine: After warming up – Keeping the engine speed between 3,500 and 4,000 rpm for 1 minute and at idle for 1 minute under no load	ON

CONSULT-II Reference Value in Data Monitor Mode

BBS004CX

Specification data are reference values.

MONITOR ITEM	CONDITION	SPECIFICATION
HO2S2 HTR (B1)	● Engine speed: Above 3,600 rpm	OFF
	● Below 3,600 rpm after the following conditions are met. – Engine: After warming up – Keeping the engine speed between 3,500 and 4,000 rpm for 1 minute and at idle for 1 minute under no load	ON

On Board Diagnosis Logic

BBS004CY

DTC No.	Trouble diagnosis name	DTC detecting condition	Possible cause
P0141 0141	Heated oxygen sensor 2 heater control circuit	The current amperage in the heated oxygen sensor 2 heater circuit is out of the normal range. (An excessively low voltage signal is sent to ECM through the heated oxygen sensor 2 heater.)	● Harness or connectors (The heated oxygen sensor 2 heater circuit is open or shorted.) ● Heated oxygen sensor 2 heater

DTC Confirmation Procedure

BBS004CZ

NOTE:
If DTC Confirmation Procedure has been previously conducted, always turn ignition switch OFF and wait at least 10 seconds before conducting the next test.
TESTING CONDITION:
Before performing the following procedure, confirm that battery voltage is between 11V and 16V at idle.

WITH CONSULT-II

1. Turn ignition switch ON.
2. Select “DATA MONITOR” mode with CONSULT-II.
3. Wait at least 5 seconds.
4. If 1st trip DTC is detected, go to EC-1009, "Diagnostic Procedure" .

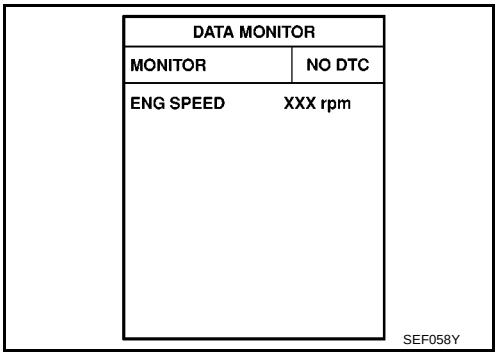

WITH GST

Follow the procedure “WITH CONSULT-II” above.

Wiring Diagram

BBS004D0

EC-HO2S2H-01

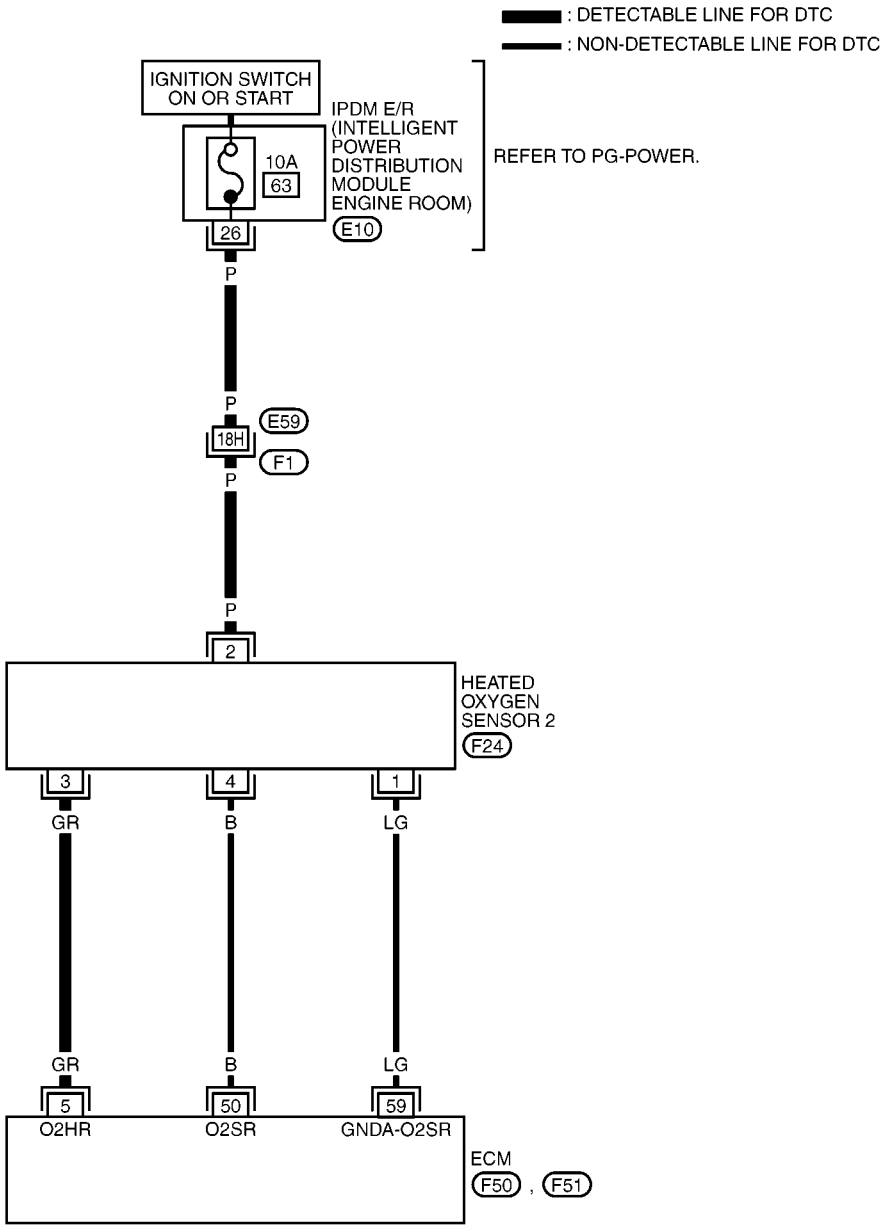

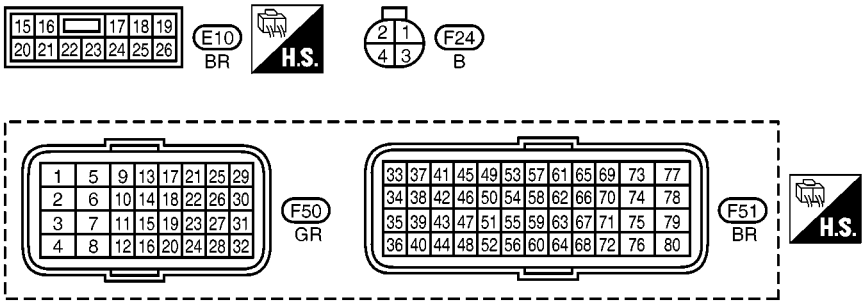

REFER TO THE FOLLOWING.
F1 - SUPER MULTIPLE JUNCTION (SMJ)

MBWA1464E

Specification data are reference values and are measured between each terminal and ground.
Pulse signal is measured by CONSULT-II.

CAUTION:
Do not use ECM ground terminals when measuring input/output voltage. Doing so may result in damage to the ECM's transistor. Use a ground other than ECM terminals, such as the ground.

TERMINAL NO.	WIRE COLOR	ITEM	CONDITION	DATA (DC Voltage)
5	GR	Heated oxygen sensor 2 heater	**[Engine is running]** ● Below 3,600 rpm after the following conditions are met. – Engine: After warming up – Keeping the engine speed between 3,500 and 4,000 rpm for 1 minute and at idle for 1 minute under no load	Approximately 10V★ 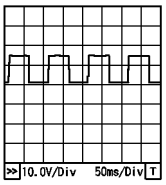 PBIA8148J
			[Ignition switch: ON] ● Engine stopped **[Engine is running]** ● Engine speed: Above 3,600 rpm	BATTERY VOLTAGE (11 - 14V)
50	B	Heated oxygen sensor 2	**[Engine is running]** ● Revving engine from idle to 3,000 rpm quickly after the following conditions are met. – Engine: After warming up – Keeping the engine speed between 3,500 and 4,000 rpm for 1 minute and at idle for 1 minute under no load.	0 - Approximately 1.0V
59	LG	Sensor ground (Heated oxygen sensor 2)	**[Engine is running]** ● **Warm-up condition** ● Idle speed	Approximately 0V

★: Average voltage for pulse signal (Actual pulse signal can be confirmed by oscilloscope.)

Diagnostic Procedure

BBS004D1

1. CHECK GROUND CONNECTIONS

1. Turn ignition switch OFF.
2. Loosen and retighten ground screws on the body.
   Refer to EC-924, "Ground Inspection" .

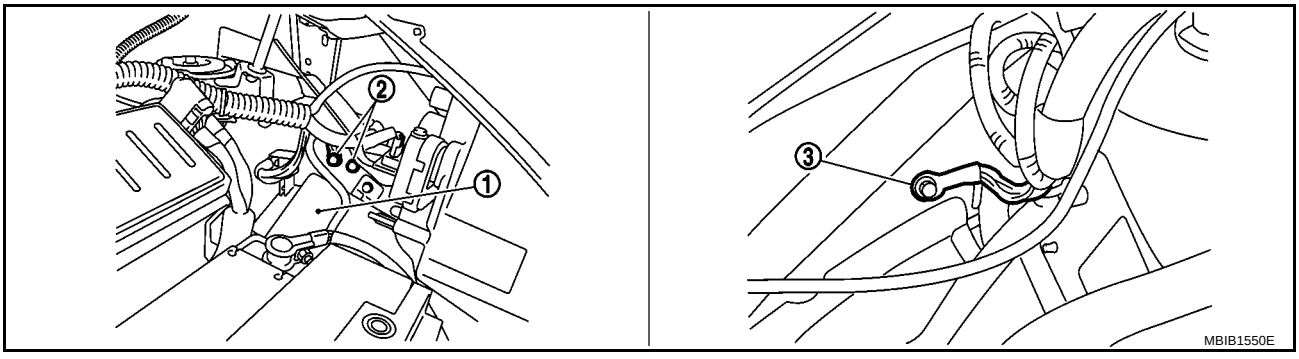

1. IPDM E/R
2. Body ground
3. Body ground

OK or NG

OK >> GO TO 2.
NG >> Repair or replace ground connections.

2. CHECK HO2S2 POWER SUPPLY CIRCUIT

1. Disconnect heated oxygen sensor 2 harness connector (2).
- Heated oxygen sensor 2 (1)
2. Turn ignition switch ON.

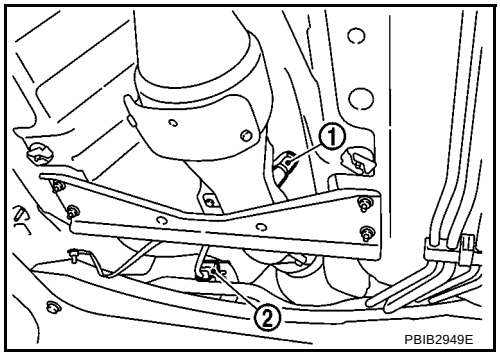

3. Check voltage between HO2S2 terminal 2 and ground with CONSULT-II or tester.

Voltage: Battery voltage

OK or NG

OK >> GO TO 4.
NG >> GO TO 3.

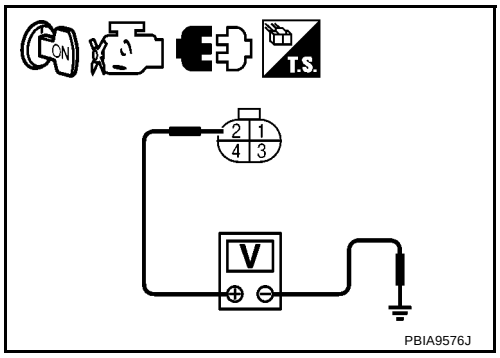

3. DETECT MALFUNCTIONING PART

Check the following.

- Harness connectors E59, F1
- IPDM E/R connector E10
- 10A fuse
- Harness for open or short between heated oxygen sensor 2 and fuse

>> Repair open circuit or short to ground or short to power in harness or connectors.

4. CHECK HO2S2 OUTPUT SIGNAL CIRCUIT FOR OPEN AND SHORT

1. Turn ignition switch OFF.
2. Disconnect ECM harness connector.
3. Check harness continuity between ECM terminal 5 and HO2S2 terminal 3.
Refer to Wiring Diagram.

Continuity should exist.

4. Also check harness for short to ground and short to power.

OK or NG

OK >> GO TO 5.
NG >> Repair open circuit or short to ground or short to power in harness or connectors.

5. CHECK HEATED OXYGEN SENSOR 2 HEATER

Refer to EC-1011, "Component Inspection" .

OK or NG

OK >> GO TO 6.
NG >> Replace heated oxygen sensor 2.

6. CHECK INTERMITTENT INCIDENT

Refer to EC-917, "TROUBLE DIAGNOSIS FOR INTERMITTENT INCIDENT" .

>> **INSPECTION END**

Component Inspection

BBS004D2

HEATED OXYGEN SENSOR 2 HEATER

1. Check resistance between HO2S2 terminals as follows.

Terminal No.	Resistance
2 and 3	3.4 - 4.4 Ω [at 25°C (77°F)]
1 and 2, 3, 4	∞ Ω (Continuity should not exist)
4 and 1, 2, 3	

2. If NG, replace heated oxygen sensor 2.

CAUTION:

- **Discard any heated oxygen sensor which has been dropped from a height of more than 0.5 m (19.7 in) onto a hard surface such as a concrete floor; use a new one.**
- **Before installing new oxygen sensor, clean exhaust system threads using Oxygen Sensor Thread Cleaner tool and approved anti-seize lubricant.**

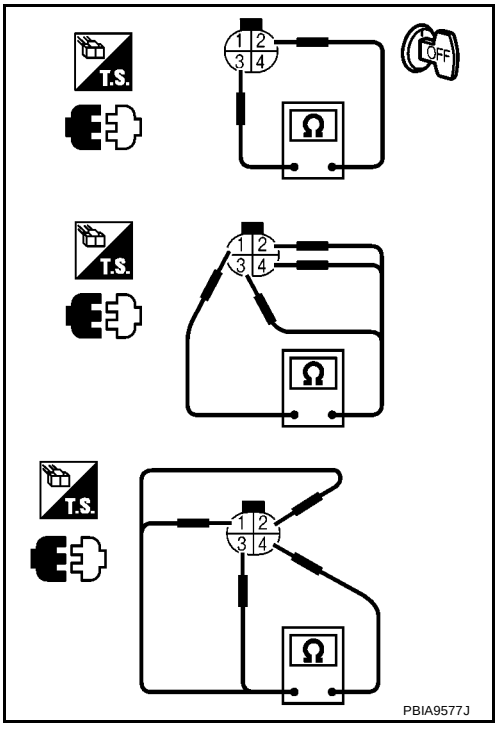

Removal and Installation

BBS004D3

HEATED OXYGEN SENSOR 2

Refer to EX-3, "EXHAUST SYSTEM" .

DTC P0171 FUEL INJECTION SYSTEM FUNCTION

PFP:16600

On Board Diagnosis Logic

BBS004D4

With the Air-Fuel Mixture Ratio Self-Learning Control, the actual mixture ratio can be brought closely to the theoretical mixture ratio based on the mixture ratio feedback signal from the heated oxygen sensor 1. The ECM calculates the necessary compensation to correct the offset between the actual and the theoretical ratios.
In case the amount of the compensation value is extremely large (The actual mixture ratio is too lean.), the ECM judges the condition as the fuel injection system malfunction and lights up the MI (2 trip detection logic).

Sensor	Input Signal to ECM	ECM function	Actuator
Heated oxygen sensor 1	Density of oxygen in exhaust gas (Mixture ratio feedback signal)	Fuel injection control	Fuel injector

DTC No.	Trouble diagnosis name	DTC detecting condition	Possible cause
P0171 0171	Fuel injection system too lean	● Fuel injection system does not operate properly. ● The amount of mixture ratio compensation is too large. (The mixture ratio is too lean.)	● Intake air leaks ● Heated oxygen sensor 1 ● Fuel injector ● Exhaust gas leaks ● Incorrect fuel pressure ● Lack of fuel ● Mass air flow sensor ● Incorrect PCV hose connection

DTC Confirmation Procedure

BBS004D5

NOTE:
If DTC Confirmation Procedure has been previously conducted, always turn ignition switch OFF and wait at least 10 seconds before conducting the next test.

WITH CONSULT-II

1. Start engine and warm it up to normal operating temperature.
2. Turn ignition switch OFF and wait at least 10 seconds.
3. Turn ignition switch ON and select “SELF-LEARNING CONT” in “WORK SUPPORT” mode with CONSULT-II.
4. Clear the self-learning control coefficient by touching “CLEAR”.
5. Select “DATA MONITOR” mode with CONSULT-II.
6. Start engine again and let it idle for at least 10 minutes.
   The 1st trip DTC P0171 should be detected at this stage, if a malfunction exists. If so, go to EC-1016, "Diagnostic Procedure".

   NOTE:
   If 1st trip DTC is not detected during above procedure, performing the following procedure is advised.

a. Turn ignition switch OFF and wait at least 10 seconds.
b. Start engine and drive the vehicle under the similar conditions to (1st trip) Freeze Frame Data for 10 minutes. Refer to the table below.
   Hold the accelerator pedal as steady as possible.

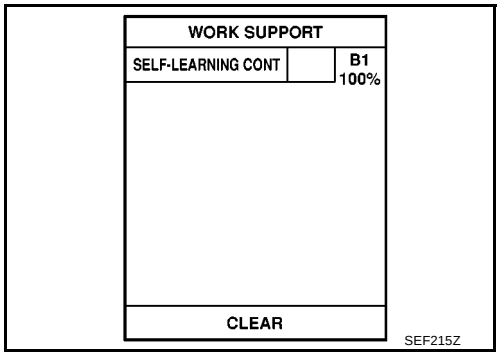

The similar conditions to (1st trip) Freeze Frame Data means the vehicle operation that the following conditions should be satisfied at the same time.

Engine speed	Engine speed in the freeze frame data ± 400 rpm
Vehicle speed	Vehicle speed in the freeze frame data ± 10 km/h (6 MPH)

Engine coolant temperature (T) condition	When the freeze frame data shows lower than 70 °C (158 °F), T should be lower than 70 °C (158 °F).
	When the freeze frame data shows higher than or equal to 70 °C (158 °F), T should be higher than or equal to 70 °C (158 °F).

7. If it is difficult to start engine at step 6, the fuel injection system has a malfunction, too.
8. Crank engine while depressing accelerator pedal. If engine starts, go to EC-1016, "Diagnostic Procedure" . If engine does not start, check exhaust and intake air leak visually.

WITH GST

1. Start engine and warm it up to normal operating temperature.
2. Turn ignition switch OFF and wait at least 10 seconds.
3. Disconnect mass air flow sensor (1) harness connector.
4. Restart engine and let idle for at least 5 seconds.
5. Stop engine and reconnect mass air flow sensor harness connector.
6. Select Service $03 with GST. Make sure DTC P0102 is detected.
7. Select Service $04 with GST and erase the DTC P0102.
8. Start engine again and let it idle for at least 10 minutes.
9. Select Service $07 with GST. The 1st trip DTC P0171 should be detected at this stage, if a malfunction exists. If so, go to EC-1016, "Diagnostic Procedure" .

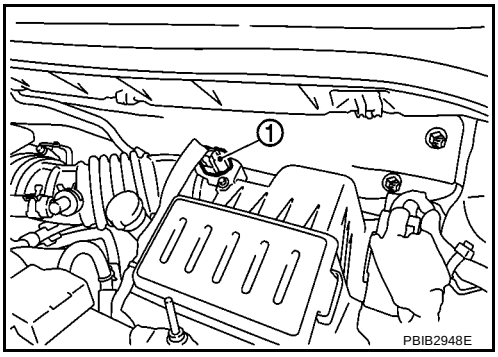

NOTE:
If 1st trip DTC is not detected during above procedure, performing the following procedure is advised.

a. Turn ignition switch OFF and wait at least 10 seconds.
b. Start engine and drive the vehicle under the similar conditions to (1st trip) Freeze Frame Data for 10 minutes. Refer to the table below.
Hold the accelerator pedal as steady as possible.

The similar conditions to (1st trip) Freeze Frame Data means the vehicle operation that the following conditions should be satisfied at the same time.

Engine speed	Engine speed in the freeze frame data ± 400 rpm
Vehicle speed	Vehicle speed in the freeze frame data ± 10 km/h (6 MPH)
Engine coolant temperature (T) condition	When the freeze frame data shows lower than 70 °C (158 °F), T should be lower than 70 °C (158 °F).
	When the freeze frame data shows higher than or equal to 70 °C (158 °F), T should be higher than or equal to 70 °C (158 °F).

10. If it is difficult to start engine at step 8, the fuel injection system has a malfunction.
11. Crank engine while depressing accelerator pedal. If engine starts, go to EC-1016, "Diagnostic Procedure" .
If engine does not start, check exhaust and intake air leak visually.

Wiring Diagram

BBS004D6

EC-FUEL-01

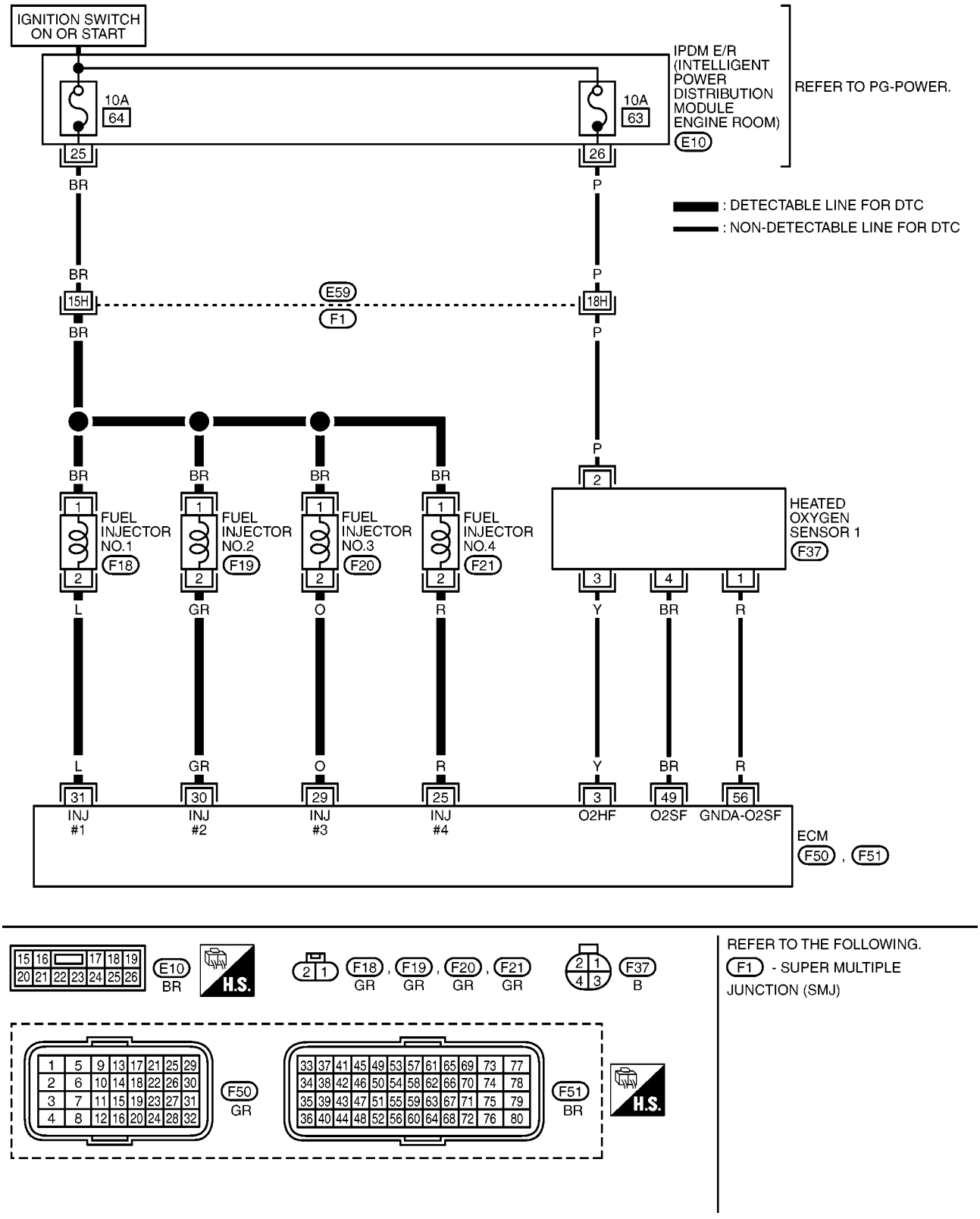

Specification data are reference values and are measured between each terminal and ground.
Pulse signal is measured by CONSULT-II.

CAUTION:
Do not use ECM ground terminals when measuring input/output voltage. Doing so may result in damage to the ECM's transistor. Use a ground other than ECM terminals, such as the ground.

TERMINAL NO.	WIRE COLOR	ITEM	CONDITION	DATA (DC Voltage)
3	Y	Heated oxygen sensor 1 heater	**[Engine is running]** ● **Warm-up condition** ● Engine speed: Below 3,600 rpm	Approximately 10V★ 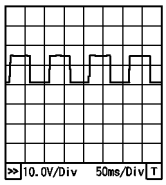 PBIA8148J
			[Ignition switch: ON] ● Engine stopped **[Engine is running]** ● Engine speed: Above 3,600 rpm	BATTERY VOLTAGE (11 - 14V)
25 29 30 31	R O GR L	Fuel injector No. 4 Fuel injector No. 3 Fuel injector No. 2 Fuel injector No. 1	**[Engine is running]** ● **Warm-up condition** ● Idle speed **NOTE:** The pulse cycle changes depending on rpm at idle	BATTERY VOLTAGE (11 - 14V)★ 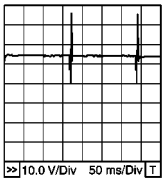 PBIB0529E
			[Engine is running] ● **Warm-up condition** ● Engine speed: 2,000 rpm	BATTERY VOLTAGE (11 - 14V)★ 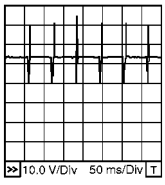 PBIA4943J
49	BR	Heated oxygen sensor 1	**[Engine is running]** ● **Warm-up condition** ● Engine speed: 2,000 rpm	0 - Approximately 1.0V (Periodically change)
56	R	Sensor ground (Heated oxygen sensor 1)	**[Engine is running]** ● Idle speed	Approximately 0V

★: Average voltage for pulse signal (Actual pulse signal can be confirmed by oscilloscope.)

Diagnostic Procedure

BBS004D7

1. CHECK EXHAUST GAS LEAK

1. Start engine and run it at idle.
2. Listen for an exhaust gas leak before three way catalyst (manifold).

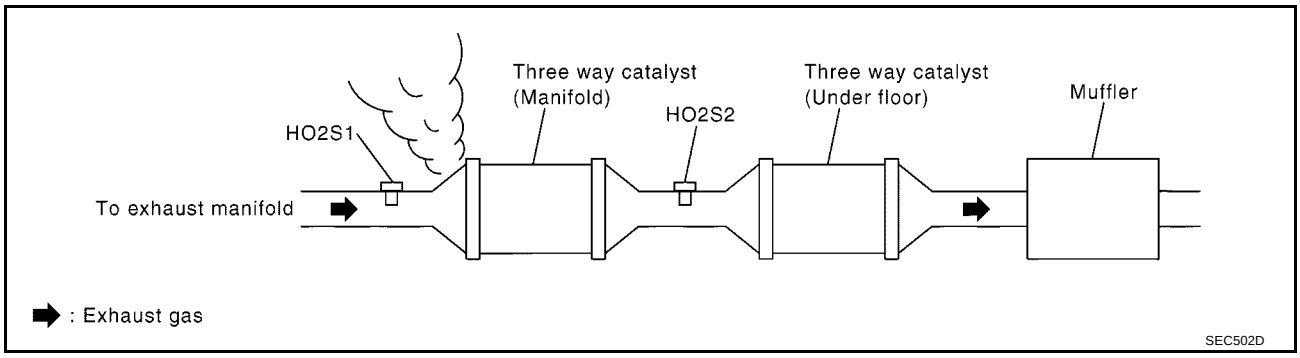

OK or NG

OK >> GO TO 2.
NG >> Repair or replace.

2. CHECK FOR INTAKE AIR LEAK AND PCV HOSE

1. Listen for an intake air leak after the mass air flow sensor.
2. Check PCV hose connection.

OK or NG

OK >> GO TO 3.
NG >> Repair or replace.

3. CHECK HEATED OXYGEN SENSOR 1 CIRCUIT FOR OPEN AND SHORT

1. Turn ignition switch OFF.
2. Disconnect heated oxygen sensor 1 harness connector (1).

– ⇦: Vehicle front

3. Disconnect ECM harness connector.
4. Check harness continuity between HO2S1 terminal 4 and ECM terminal 49.
   Refer to Wiring Diagram.

   Continuity should exist.

5. Check harness continuity between ECM terminal 49 or HO2S1 terminal 4 and ground.
   Refer to Wiring Diagram.

   Continuity should not exist.

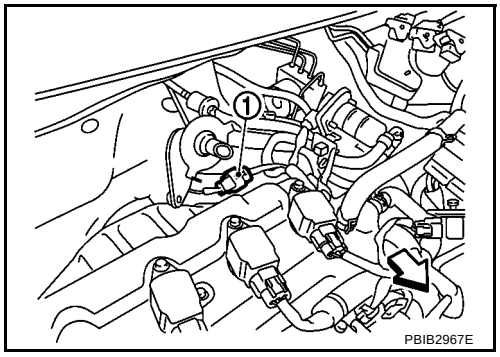

6. Also check harness for short to power.

OK or NG

OK >> GO TO 4.
NG >> Repair open circuit or short to ground or short to power in harness or connectors.

4. CHECK FUEL PRESSURE

1. Release fuel pressure to zero. Refer to EC-860, "FUEL PRESSURE RELEASE" .
2. Install fuel pressure gauge and check fuel pressure. Refer to EC-860, "FUEL PRESSURE CHECK" .

At idling: Approximately 350 kPa (3.5 bar, 3.57 kg/cm^2 , 51 psi)

OK or NG

OK >> GO TO 5.
NG >> Follow the construction of EC-860, "FUEL PRESSURE CHECK" .

5. CHECK MASS AIR FLOW SENSOR

With CONSULT-II

1. Install all removed parts.
2. Check “MASS AIR FLOW” in “DATA MONITOR” mode with CONSULT-II.

1.0 - 4.0 g·m/sec: at idling
2.0 - 10.0 g·m/sec: at 2,500 rpm

With GST

1. Install all removed parts.
2. Check mass air flow sensor signal in Service $01 with GST.

1.0 - 4.0 g·m/sec: at idling
2.0 - 10.0 g·m/sec: at 2,500 rpm

OK or NG

OK >> GO TO 6.
NG >> Check connectors for rusted terminals or loose connections in the mass air flow sensor circuit or ground. Refer to EC-935, "DTC P0102, P0103 MAF SENSOR" .

6. CHECK FUNCTION OF FUEL INJECTORS

With CONSULT-II

1. Start engine.
2. Perform “POWER BALANCE” in “ACTIVE TEST” mode with CONSULT-II.
3. Make sure that each circuit produces a momentary engine speed drop.

ACTIVE TEST	
POWER BALANCE	
MONITOR	
ENG SPEED	XXX rpm
MAS A/F SE-B1	XXX V

PBIB0133E

Without CONSULT-II

1. Start engine.
2. Listen to each fuel injector operating sound.

Clicking noise should be heard.

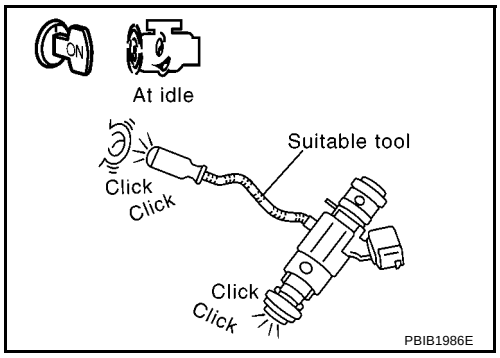

PBIB1986E

OK or NG

OK >> GO TO 7.
NG >> Perform trouble diagnosis for EC-1209, "FUEL INJECTOR" .

7. CHECK FUEL INJECTOR

1. Confirm that the engine is cooled down and there are no fire hazards near the vehicle.
2. Turn ignition switch OFF.
3. Remove fuel tube assembly. Refer to EM-135, "FUEL INJECTOR AND FUEL TUBE" .
   Keep fuel hose and all fuel injectors connected to fuel tube.
   The fuel injector harness connectors should remain connected.
4. Disconnect all ignition coil harness connectors.
5. Prepare pans or saucers under each fuel injector.
6. Crank engine for about 3 seconds. Make sure that fuel sprays out from fuel injectors.

Fuel should be sprayed evenly for each fuel injector.

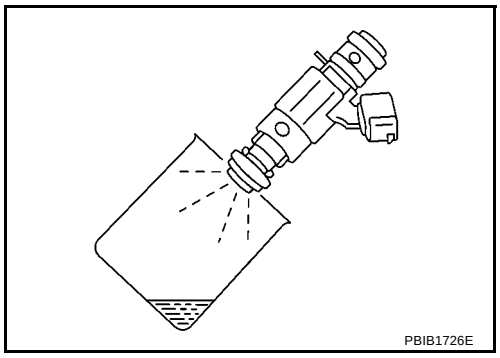
PBIB1726E

OK or NG

OK >> GO TO 8.
NG >> Replace fuel injectors from which fuel does not spray out. Always replace O-ring with new ones.

8. CHECK INTERMITTENT INCIDENT

Refer to EC-917, "TROUBLE DIAGNOSIS FOR INTERMITTENT INCIDENT" .

>> **INSPECTION END**

DTC P0172 FUEL INJECTION SYSTEM FUNCTION

PFP:16600

On Board Diagnosis Logic

BBS004D8

With the Air-Fuel Mixture Ratio Self-Learning Control, the actual mixture ratio can be brought closely to the theoretical mixture ratio based on the mixture ratio feedback signal from the heated oxygen sensors 1. The ECM calculates the necessary compensation to correct the offset between the actual and the theoretical ratios.
In case the amount of the compensation value is extremely large (The actual mixture ratio is too rich.), the ECM judges the condition as the fuel injection system malfunction and lights up the MI (2 trip detection logic).

Sensor	Input Signal to ECM	ECM function	Actuator
Heated oxygen sensor 1	Density of oxygen in exhaust gas (Mixture ratio feedback signal)	Fuel injection control	Fuel injector

DTC No.	Trouble diagnosis name	DTC detecting condition	Possible cause
P0172 0172	Fuel injection system too rich	● Fuel injection system does not operate properly. ● The amount of mixture ratio compensation is too large. (The mixture ratio is too rich.)	● Heated oxygen sensor 1 ● Fuel injector ● Exhaust gas leaks ● Incorrect fuel pressure ● Mass air flow sensor

DTC Confirmation Procedure

BBS004D9

NOTE:
If DTC Confirmation Procedure has been previously conducted, always turn ignition switch OFF and wait at least 10 seconds before conducting the next test.

WITH CONSULT-II

1. Start engine and warm it up to normal operating temperature.
2. Turn ignition switch OFF and wait at least 10 seconds.
3. Turn ignition switch ON and select “SELF-LEARNING CONT” in “WORK SUPPORT” mode with CONSULT-II.
4. Clear the self-learning control coefficient by touching “CLEAR”.
5. Select “DATA MONITOR” mode with CONSULT-II.
6. Start engine again and let it idle for at least 10 minutes.
   The 1st trip DTC P0172 should be detected at this stage, if a malfunction exists. If so, go to EC-1023, "Diagnostic Procedure".

   NOTE:
   If 1st trip DTC is not detected during above procedure, performing the following procedure is advised.

a. Turn ignition switch OFF and wait at least 10 seconds.
b. Start engine and drive the vehicle under the similar conditions to (1st trip) Freeze Frame Data for 10 minutes. Refer to the table below.
   Hold the accelerator pedal as steady as possible.

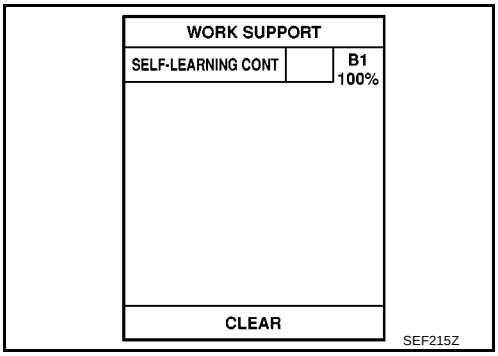

The similar conditions to (1st trip) Freeze Frame Data means the vehicle operation that the following conditions should be satisfied at the same time.

Engine speed	Engine speed in the freeze frame data ± 400 rpm
Vehicle speed	Vehicle speed in the freeze frame data ± 10 km/h (6 MPH)
Engine coolant temperature (T) condition	When the freeze frame data shows lower than 70 °C (158 °F), T should be lower than 70 °C (158 °F).
	When the freeze frame data shows higher than or equal to 70 °C (158 °F), T should be higher than or equal to 70 °C (158 °F).

7. If it is difficult to start engine at step 6, the fuel injection system has a malfunction, too.

8. Crank engine while depressing accelerator pedal.
   If engine starts, go to EC-1023, "Diagnostic Procedure" . If engine does not start, remove ignition plugs and check for fouling, etc.

WITH GST

1. Start engine and warm it up to normal operating temperature.
2. Turn ignition switch OFF and wait at least 10 seconds.
3. Disconnect mass air flow sensor (1) harness connector.
4. Restart engine and let idle for at least 5 seconds.
5. Stop engine and reconnect mass air flow sensor harness connector.
6. Select Service $03 with GST. Make sure DTC P0102 is detected.
7. Select Service $04 with GST and erase the DTC P0102.
8. Start engine again and let it idle for at least 10 minutes.
9. Select Service $07 with GST. The 1st trip DTC P0172 should be detected at this stage, if a malfunction exists. If so, go to EC-1023, "Diagnostic Procedure" .

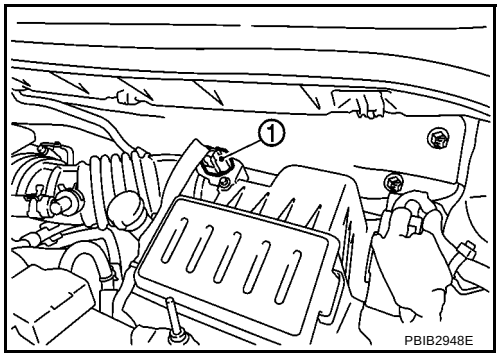

NOTE:
If 1st trip DTC is not detected during above procedure, performing the following procedure is advised.

a. Turn ignition switch OFF and wait at least 10 seconds.
b. Start engine and drive the vehicle under the similar conditions to (1st trip) Freeze Frame Data for 10 minutes. Refer to the table below.
   Hold the accelerator pedal as steady as possible.

   The similar conditions to (1st trip) Freeze Frame Data means the vehicle operation that the following conditions should be satisfied at the same time.

Engine speed	Engine speed in the freeze frame data ± 400 rpm
Vehicle speed	Vehicle speed in the freeze frame data ± 10 km/h (6 MPH)
Engine coolant temperature (T) condition	When the freeze frame data shows lower than 70 °C (158 °F), T should be lower than 70 °C (158 °F).
	When the freeze frame data shows higher than or equal to 70 °C (158 °F), T should be higher than or equal to 70 °C (158 °F).

10. If it is difficult to start engine at step 8, the fuel injection system has a malfunction.
11. Crank engine while depressing accelerator pedal.
    If engine starts, go to EC-1023, "Diagnostic Procedure" . If engine does not start, remove ignition plugs and check for fouling, etc.

Wiring Diagram

BBS004DA

EC-FUEL-01

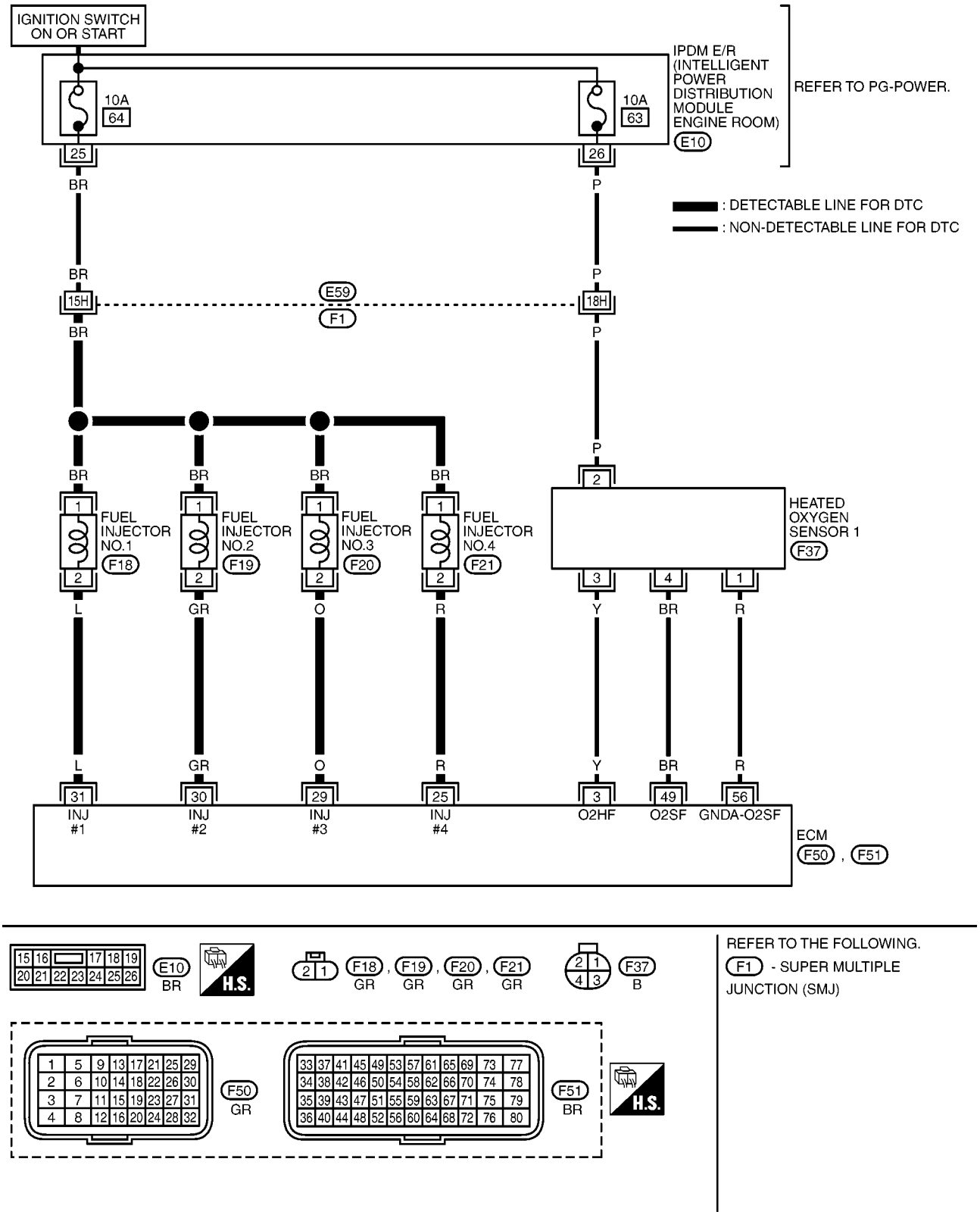

Specification data are reference values and are measured between each terminal and ground.
Pulse signal is measured by CONSULT-II.

CAUTION:

Do not use ECM ground terminals when measuring input/output voltage. Doing so may result in damage to the ECM's transistor. Use a ground other than ECM terminals, such as the ground.

TERMINAL NO.	WIRE COLOR	ITEM	CONDITION	DATA (DC Voltage)
3	Y	Heated oxygen sensor 1 heater	**[Engine is running]** ● **Warm-up condition** ● Engine speed: Below 3,600 rpm	Approximately 10V★ 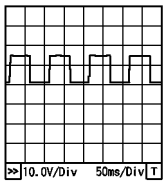 PBIA8148J
			[Ignition switch: ON] ● Engine stopped **[Engine is running]** ● Engine speed: Above 3,600 rpm	BATTERY VOLTAGE (11 - 14V)
25 29 30 31	R O GR L	Fuel injector No. 4 Fuel injector No. 3 Fuel injector No. 2 Fuel injector No. 1	**[Engine is running]** ● **Warm-up condition** ● Idle speed **NOTE:** The pulse cycle changes depending on rpm at idle	BATTERY VOLTAGE (11 - 14V)★ 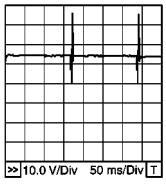 PBIB0529E
			[Engine is running] ● **Warm-up condition** ● Engine speed: 2,000 rpm	BATTERY VOLTAGE (11 - 14V)★ 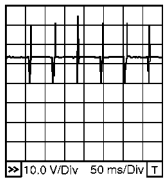 PBIA4943J
49	BR	Heated oxygen sensor 1	**[Engine is running]** ● **Warm-up condition** ● Engine speed: 2,000 rpm	0 - Approximately 1.0V (Periodically change)
56	R	Sensor ground (Heated oxygen sensor 1)	**[Engine is running]** ● Idle speed	Approximately 0V

★: Average voltage for pulse signal (Actual pulse signal can be confirmed by oscilloscope.)

Diagnostic Procedure

BBS004DB

1. CHECK EXHAUST GAS LEAK

1. Start engine and run it at idle.
2. Listen for an exhaust gas leak before three way catalyst (manifold).

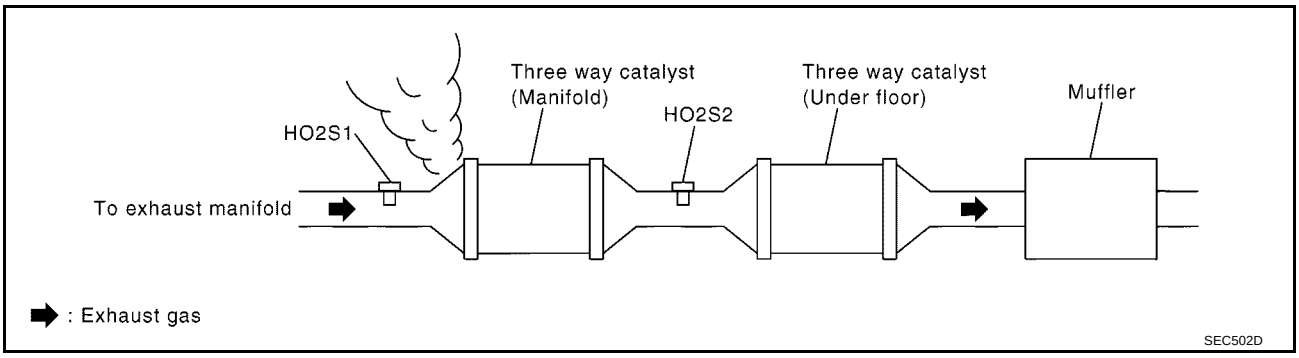

OK or NG

OK >> GO TO 2.
NG >> Repair or replace.

2. CHECK FOR INTAKE AIR LEAK

Listen for an intake air leak after the mass air flow sensor.

OK or NG

OK >> GO TO 3.
NG >> Repair or replace.

3. CHECK HEATED OXYGEN SENSOR 1 CIRCUIT FOR OPEN AND SHORT

1. Turn ignition switch OFF.
2. Disconnect heated oxygen sensor 1 harness connector (1).

– ⇦: Vehicle front

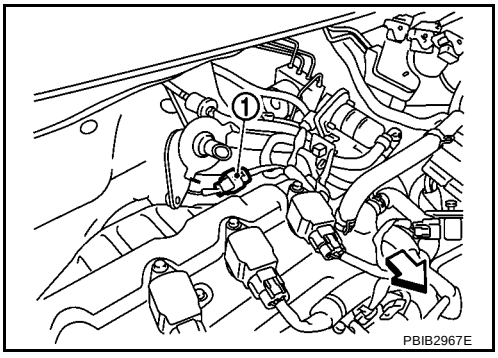

3. Disconnect ECM harness connector.
4. Check harness continuity between HO2S1 terminal 4 and ECM terminal 49.
   Refer to Wiring Diagram.

   Continuity should exist.

5. Check harness continuity between ECM terminal 49 or HO2S1 terminal 4 and ground.
   Refer to Wiring Diagram.

   Continuity should not exist.

6. Also check harness for short to power.

OK or NG

OK >> GO TO 4.
NG >> Repair open circuit or short to ground or short to power in harness or connectors.

4. CHECK FUEL PRESSURE

1. Release fuel pressure to zero. Refer to EC-860, "FUEL PRESSURE RELEASE" .
2. Install fuel pressure gauge and check fuel pressure. Refer to EC-860, "FUEL PRESSURE CHECK" .

At idling: 350 kPa (3.5 bar, 3.57 kg/cm2, 51 psi)

OK or NG

OK >> GO TO 5.
NG >> Follow the construction of EC-860, "FUEL PRESSURE CHECK" .

5. CHECK MASS AIR FLOW SENSOR

With CONSULT-II

1. Install all removed parts.
2. Check “MASS AIR FLOW” in “DATA MONITOR” mode with CONSULT-II.

1.0 - 4.0 g·m/sec: at idling
2.0 - 10.0 g·m/sec: at 2,500 rpm

With GST

1. Install all removed parts.
2. Check mass air flow sensor signal in Service $01 with GST.

1.0 - 4.0 g·m/sec: at idling
2.0 - 10.0 g·m/sec: at 2,500 rpm

OK or NG

OK >> GO TO 6.
NG >> Check connectors for rusted terminals or loose connections in the mass air flow sensor circuit or ground. Refer to EC-935, "DTC P0102, P0103 MAF SENSOR" .

6. CHECK FUNCTION OF FUEL INJECTORS

With CONSULT-II

1. Start engine.
2. Perform “POWER BALANCE” in “ACTIVE TEST” mode with CONSULT-II.
3. Make sure that each circuit produces a momentary engine speed drop.

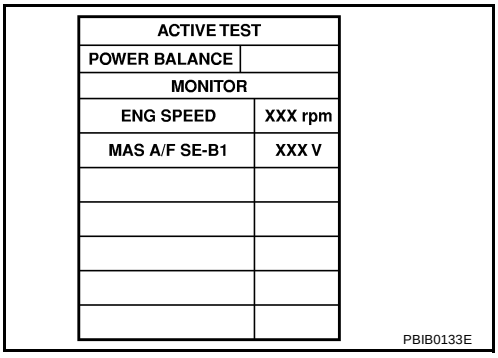

ACTIVE TEST	
POWER BALANCE	
MONITOR	
ENG SPEED	XXX rpm
MAS A/F SE-B1	XXX V

PBIB0133E

Without CONSULT-II

1. Start engine.
2. Listen to each fuel injector operating sound.

Clicking noise should be heard.

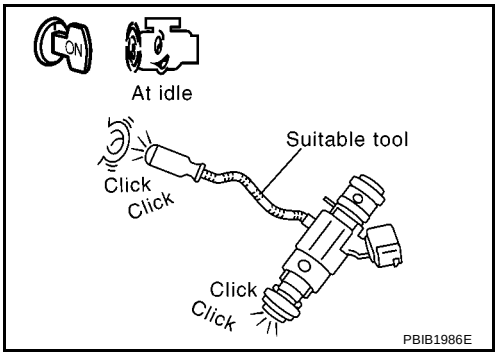

PBIB1986E

OK or NG

OK >> GO TO 7.
NG >> Perform trouble diagnosis for EC-1209, "FUEL INJECTOR" .

7. CHECK FUEL INJECTOR

1. Remove fuel injector assembly. Refer to EM-135, "FUEL INJECTOR AND FUEL TUBE" .
   Keep fuel hose and all fuel injectors connected to fuel tube.
2. Confirm that the engine is cooled down and there are no fire hazards near the vehicle.
3. Disconnect fuel injector harness connectors.
4. Disconnect all ignition coil harness connectors.
5. Prepare pans or saucers under each fuel injectors.
6. Crank engine for about 3 seconds.
   Make sure fuel does not drip from fuel injector.

OK or NG

OK (Does not drip.)>>GO TO 8.
NG (Drips.)>>Replace the fuel injectors from which fuel is dripping. Always replace O-ring with new one.

8. CHECK INTERMITTENT INCIDENT

Refer to EC-917, "TROUBLE DIAGNOSIS FOR INTERMITTENT INCIDENT" .

>> **INSPECTION END**

DTC P0222, P0223 TP SENSOR

PFP:16119

Component Description

BBS004DC

Electric throttle control actuator consists of throttle control motor, throttle position sensor, etc. The throttle position sensor responds to the throttle valve movement.
The throttle position sensor has the two sensors. These sensors are a kind of potentiometers which transform the throttle valve position into output voltage, and emit the voltage signal to the ECM. In addition, these sensors detect the opening and closing speed of the throttle valve and feed the voltage signals to the ECM. The ECM judges the current opening angle of the throttle valve from these signals and the ECM controls the throttle control motor to make the throttle valve opening angle properly in response to driving condition.

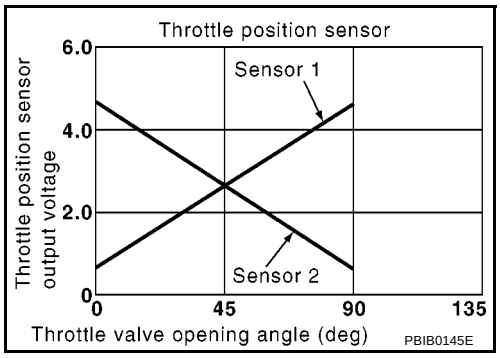

CONSULT-II Reference Value in Data Monitor Mode

BBS004DD

Specification data are reference values.

MONITOR ITEM	CONDITION		SPECIFICATION
THRTL SEN 1 THRTL SEN 2*	● Ignition switch: ON (Engine stopped) ● Shift lever: D (A/T), 1st (M/T)	Accelerator pedal: Fully released	More than 0.36V
		Accelerator pedal: Fully depressed	Less than 4.75V

*: Throttle position sensor 2 signal is converted by ECM internally. Thus, it differs from ECM terminal voltage signal.

On Board Diagnosis Logic

BBS004DE

These self-diagnoses have the one trip detection logic.

NOTE:
If DTC P0222 or P0223 is displayed with DTC P1229, first perform the trouble diagnosis for DTC P1229. Refer to EC-1150, "DTC P1229 SENSOR POWER SUPPLY" .

DTC No.	Trouble diagnosis name	DTC detecting condition	Possible cause
P0222 0222	Throttle position sensor 1 circuit low input	An excessively low voltage from the TP sensor 1 is sent to ECM.	● Harness or connectors (TP sensor 1 circuit is open or shorted.) ● Electric throttle control actuator (TP sensor 1)
P0223 0223	Throttle position sensor 1 circuit high input	An excessively high voltage from the TP sensor 1 is sent to ECM.	

FAIL-SAFE MODE

When the malfunction is detected, ECM enters fail-safe mode and the MI lights up.

Engine operation condition in fail-safe mode
The ECM controls the electric throttle control actuator in regulating the throttle opening in order for the idle position to be within +10 degrees. The ECM regulates the opening speed of the throttle valve to be slower than the normal condition. So, the acceleration will be poor.

DTC Confirmation Procedure

BBS004DF

NOTE:
If DTC Confirmation Procedure has been previously conducted, always turn ignition switch OFF and wait at least 10 seconds before conducting the next test.
TESTING CONDITION:
Before performing the following procedure, confirm that battery voltage is more than 10V at idle.

WITH CONSULT-II

1. Turn ignition switch ON.
2. Select “DATA MONITOR” mode with CONSULT-II.
3. Start engine and let it idle for 1 second.
4. If DTC is detected, go to EC-1029, "Diagnostic Procedure" .

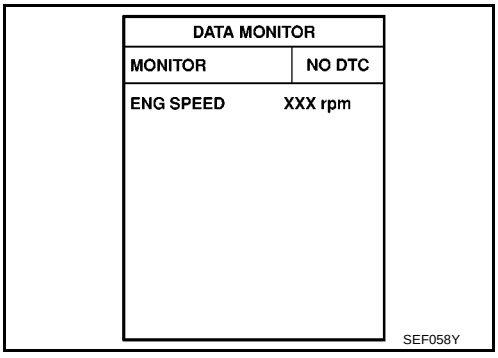

WITH GST

Follow the procedure “WITH CONSULT-II” above.

Wiring Diagram

BBS004DG

EC-TPS1-01

: DETECTABLE LINE FOR DTC
: NON-DETECTABLE LINE FOR DTC

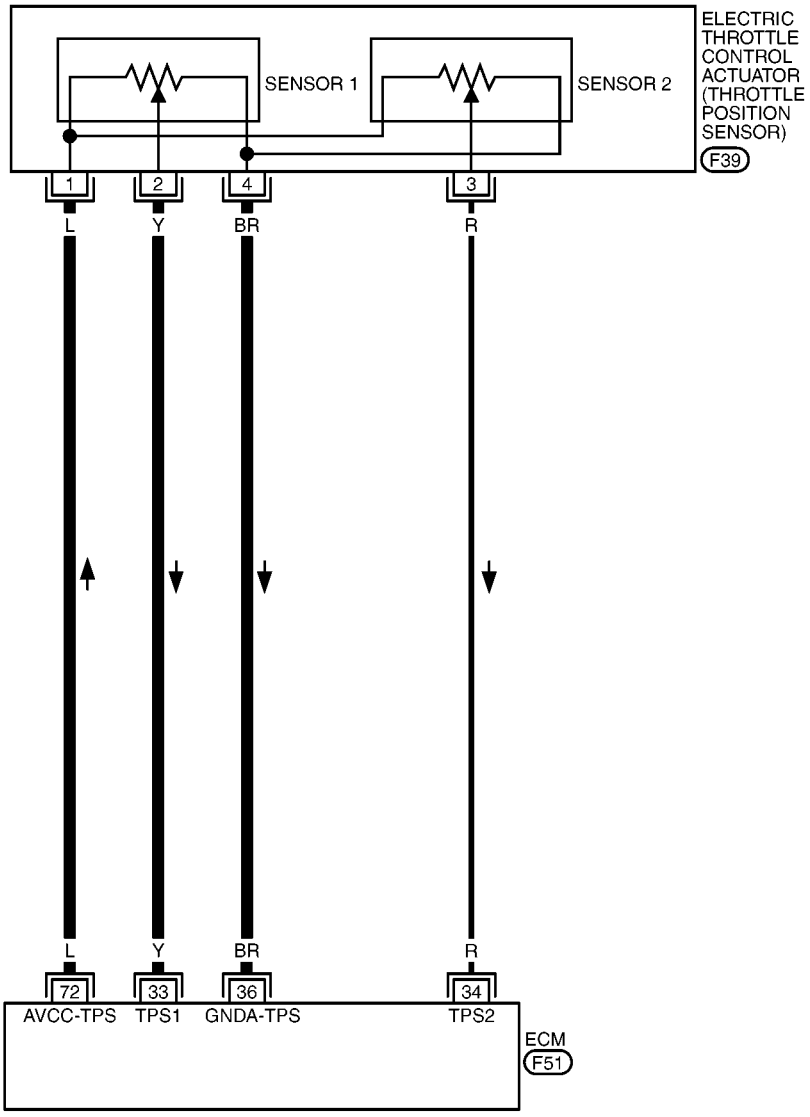

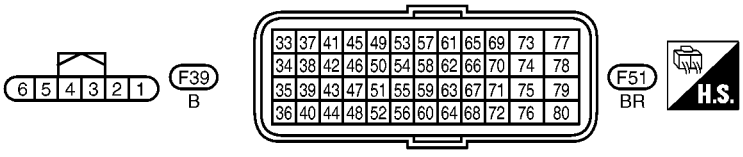

MBWA1466E

Specification data are reference values and are measured between each terminal and ground.

CAUTION:
Do not use ECM ground terminals when measuring input/output voltage. Doing so may result in damage to the ECM's transistor. Use a ground other than ECM terminals, such as the ground.

TERMINAL NO.	WIRE COLOR	ITEM	CONDITION	DATA (DC Voltage)
33	Y	Throttle position sensor 1	**[Ignition switch: ON]** ● Engine stopped ● Shift lever: D (A/T), 1st (M/T) ● Accelerator pedal: Fully released	More than 0.36V
			[Ignition switch: ON] ● Engine stopped ● Shift lever: D (A/T), 1st (M/T) ● Accelerator pedal: Fully depressed	Less than 4.75V
34	R	Throttle position sensor 2	**[Ignition switch: ON]** ● Engine stopped ● Shift lever: D (A/T), 1st (M/T) ● Accelerator pedal: Fully released	Less than 4.75V
			[Ignition switch: ON] ● Engine stopped ● Shift lever: D (A/T), 1st (M/T) ● Accelerator pedal: Fully depressed	More than 0.36V
36	BR	Sensor ground (Throttle position sensor)	**[Engine is running]** ● **Warm-up condition** ● Idle speed	Approximately 0V
72	L	Sensor power supply (Throttle position sensor)	**[Ignition switch: ON]**	Approximately 5V

Diagnostic Procedure

BBS004DH

1. CHECK GROUND CONNECTIONS

1. Turn ignition switch OFF.
2. Loosen and retighten ground screws on the body.
   Refer to EC-924, "Ground Inspection" .

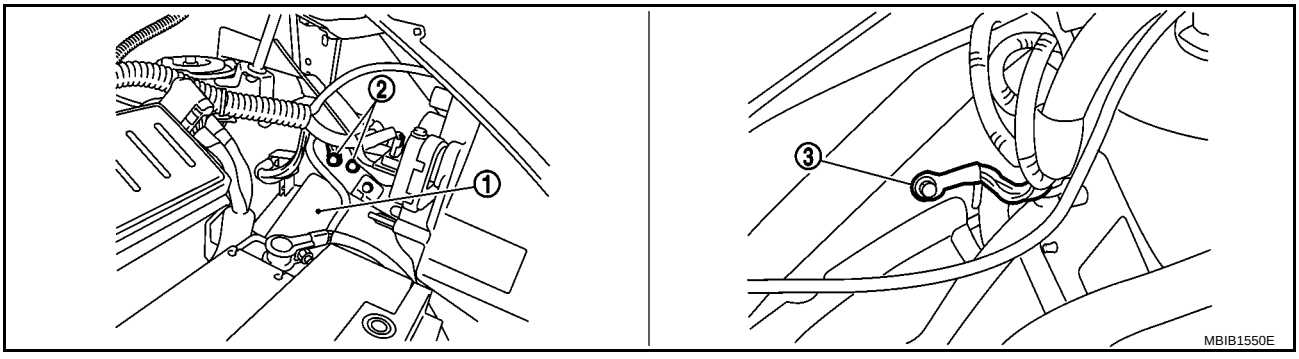

1. IPDM E/R
2. Body ground
3. Body ground

OK or NG

OK >> GO TO 2.
NG >> Repair or replace ground connections.

2. CHECK THROTTLE POSITION SENSOR 1 POWER SUPPLY CIRCUIT

1. Disconnect electric throttle control actuator (1) harness connector.

– ⇦: Vehicle front

2. Turn ignition switch ON.

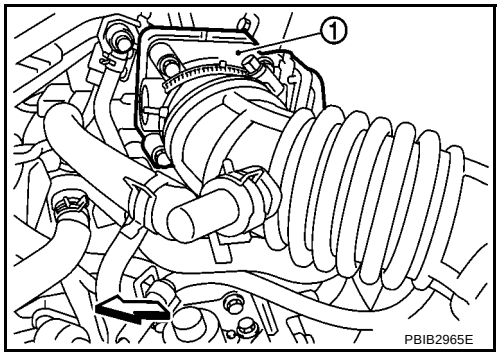

3. Check voltage between electric throttle control actuator terminal 1 and ground with CONSULT-II or tester.

Voltage: Approximately 5V

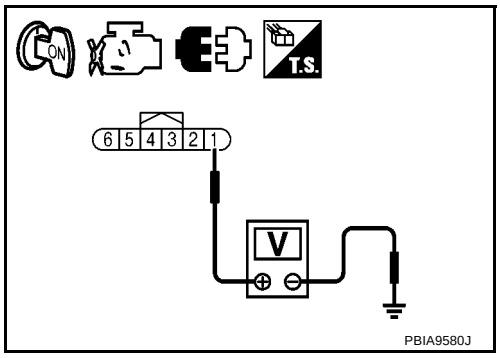

OK or NG

OK >> GO TO 3.
NG >> Repair open circuit or short to ground or short to power in harness or connectors.

3. CHECK THROTTLE POSITION SENSOR 1 GROUND CIRCUIT FOR OPEN AND SHORT

1. Turn ignition switch OFF.
2. Disconnect ECM harness connector.
3. Check harness continuity between electric throttle control actuator terminal 4 and ECM terminal 36. Refer to Wiring Diagram.

Continuity should exist.

4. Also check harness for short to ground and short to power.

OK or NG

OK >> GO TO 4.
NG >> Repair open circuit or short to ground or short to power in harness or connectors.

4. CHECK THROTTLE POSITION SENSOR 1 INPUT SIGNAL CIRCUIT FOR OPEN AND SHORT

1. Check harness continuity between ECM terminal 33 and electric throttle control actuator terminal 2. Refer to Wiring Diagram.

Continuity should exist.

2. Also check harness for short to ground and short to power.

OK or NG

OK >> GO TO 5.
NG >> Repair open circuit or short to ground or short to power in harness or connectors.

5. CHECK THROTTLE POSITION SENSOR

Refer to EC-1031, "Component Inspection" .

OK or NG

OK >> GO TO 7.
NG >> GO TO 6.

6. REPLACE ELECTRIC THROTTLE CONTROL ACTUATOR

1. Replace the electric throttle control actuator.
2. Perform EC-857, "Throttle Valve Closed Position Learning" .
3. Perform EC-858, "Idle Air Volume Learning" .

>> **INSPECTION END**

7. CHECK INTERMITTENT INCIDENT

Refer to EC-917, "TROUBLE DIAGNOSIS FOR INTERMITTENT INCIDENT" .

>> **INSPECTION END**

Component Inspection

BBS004DI

THROTTLE POSITION SENSOR

1. Reconnect all harness connectors disconnected.
2. Perform EC-857, "Throttle Valve Closed Position Learning" .
3. Turn ignition switch ON.
4. Set shift lever to D (A/T), 1st (M/T) position.
5. Check voltage between ECM terminals 33 (TP sensor 1 signal), 34 (TP sensor 2 signal) and ground under the following conditions.

Terminal	Accelerator pedal	Voltage
33 (Throttle position sensor 1)	Fully released	More than 0.36V
	Fully depressed	Less than 4.75V
34 (Throttle position sensor 2)	Fully released	Less than 4.75V
	Fully depressed	More than 0.36V

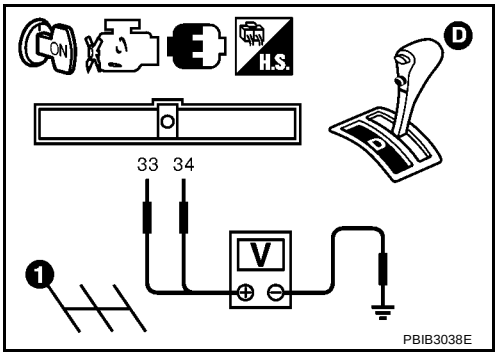

6. If NG, replace electric throttle control actuator and go to the next step.
7. Perform EC-857, "Throttle Valve Closed Position Learning" .
8. Perform EC-858, "Idle Air Volume Learning" .

Removal and Installation

BBS004DJ

ELECTRIC THROTTLE CONTROL ACTUATOR

Refer to EM-120, "INTAKE MANIFOLD" .

DTC P0300 - P0304 MULTIPLE CYLINDER MISFIRE, NO. 1 - 4 CYLINDER MISFIRE

PFP:00000

On Board Diagnosis Logic

BBS004DK

When a misfire occurs, engine speed will fluctuate. If the engine speed fluctuates enough to cause the crankshaft position (CKP) sensor (POS) signal to vary, ECM can determine that a misfire is occurring.

Sensor	Input Signal to ECM	ECM function
Crankshaft position sensor (POS)	Engine speed	On board diagnosis of misfire

The misfire detection logic consists of the following two conditions.

1. One Trip Detection Logic (Three Way Catalyst Damage)
   On the first trip that a misfire condition occurs that can damage the three way catalyst (TWC) due to overheating, the MI will blink.
   When a misfire condition occurs, the ECM monitors the CKP sensor (POS) signal every 200 engine revolutions for a change.
   When the misfire condition decreases to a level that will not damage the TWC, the MI will turn off.
   If another misfire condition occurs that can damage the TWC on a second trip, the MI will blink.
   When the misfire condition decreases to a level that will not damage the TWC, the MI will remain on.
   If another misfire condition occurs that can damage the TWC, the MI will begin to blink again.
2. Two Trip Detection Logic (Exhaust quality deterioration)
   For misfire conditions that will not damage the TWC (but will affect vehicle emissions), the MI will only light when the misfire is detected on a second trip. During this condition, the ECM monitors the CKP sensor signal every 1,000 engine revolutions.
   A misfire malfunction can be detected on any one cylinder or on multiple cylinders.

DTC No.	Trouble diagnosis name	DTC detecting condition	Possible cause
P0300 0300	Multiple cylinder misfire detected	Multiple cylinder misfire.	● Improper spark plug ● Insufficient compression ● Incorrect fuel pressure ● Fuel injector circuit is open or shorted ● Fuel injector ● Intake air leak ● The ignition signal circuit is open or shorted ● Lack of fuel ● Drive plate or flywheel ● Heated oxygen sensor 1 ● Incorrect PCV hose connection
P0301 0301	No.1 cylinder misfire detected	No. 1 cylinder misfires.	
P0302 0302	No. 2 cylinder misfire detected	No. 2 cylinder misfires.	
P0303 0303	No. 3 cylinder misfire detected	No. 3 cylinder misfires.	
P0304 0304	No. 4 cylinder misfire detected	No. 4 cylinder misfires.	

DTC Confirmation Procedure

BBS004DL

CAUTION:
Always drive vehicle in safe manner according to traffic conditions and obey all traffic laws when driving.

NOTE:
If DTC Confirmation Procedure has been previously conducted, always turn ignition switch OFF and wait at least 10 seconds before conducting the next test.

WITH CONSULT-II

1. Turn ignition switch ON, and select “DATA MONITOR” mode with CONSULT-II.
2. Start engine and warm it up to normal operating temperature.
3. Turn ignition switch OFF and wait at least 10 seconds.
4. Restart engine and let it idle for about 15 minutes.
5. If 1st trip DTC is detected, go to EC-1033, "Diagnostic Procedure" .

   NOTE:
   If 1st trip DTC is not detected during above procedure, performing the following procedure is advised.

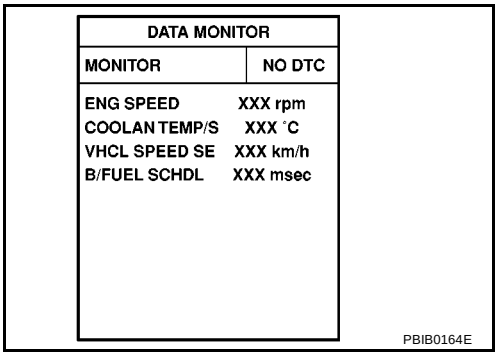

a. Turn ignition switch OFF and wait at least 10 seconds.
b. Start engine and drive the vehicle under the similar conditions to (1st trip) Freeze Frame Data for a certain time. Refer to table below.
   Hold the accelerator pedal as steady as possible.

   The similar conditions to (1st trip) Freeze Frame Data means the vehicle operation that the following condition should be satisfied at the same time:

Engine speed	Engine speed in the freeze frame data ± 400 rpm
Vehicle speed	Vehicle speed in the freeze frame data ± 10 km/h (6 MPH)
Engine coolant temperature (T) condition	When the freeze frame data shows lower than 70°C (158°F), T should be lower than 70°C (158°F)
	When the freeze frame data shows higher than or equal to 70°C (158°F), T should be higher than or equal to 70°C (158°F)

The time to driving varies according to the engine speed in the freeze frame data.
Refer to the following table.

Engine speed	Time
Around 1,000 rpm	Approximately 10 minutes
Around 2,000 rpm	Approximately 5 minutes
More than 3,000 rpm	Approximately 3.5 minutes

WITH GST

Follow the procedure “WITH CONSULT-II” above.

Diagnostic Procedure

BBS004DM

1. CHECK FOR INTAKE AIR LEAK AND PCV HOSE

1. Start engine and run it at idle speed.
2. Listen for the sound of the intake air leak.
3. Check PCV hose connection.

OK or NG

OK >> GO TO 2.
NG >> Repair or replace.

2. CHECK FOR EXHAUST SYSTEM CLOGGING

Stop engine and visually check exhaust tube, three way catalyst and muffler for dents.

OK or NG

OK >> GO TO 3.
NG >> Repair or replace.

3. PERFORM POWER BALANCE TEST

With CONSULT-II

1. Perform “POWER BALANCE” in “ACTIVE TEST” mode.
2. Is there any cylinder which does not produce a momentary engine speed drop?

ACTIVE TEST	
POWER BALANCE	
MONITOR	
ENG SPEED	XXX rpm
MAS A/F SE-B1	XXX V

PBIB0133E

Without CONSULT-II

When disconnecting each fuel injector (2) harness connector one at a time, is there any cylinder which does not produce a momentary engine speed drop?

- Ignition coil (1)

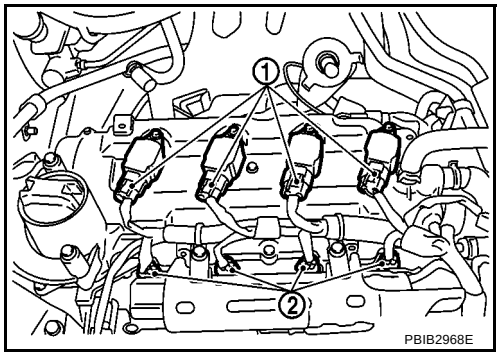

PBIB2968E

Yes or No

Yes >> GO TO 4.
No >> GO TO 9.

4. CHECK FUEL INJECTOR

Does each fuel injector make an operating sound at idle?

Yes or No

Yes >> GO TO 5.
No >> Check fuel injector(s) and circuit(s). Refer to EC-1209, "FUEL INJECTOR" .

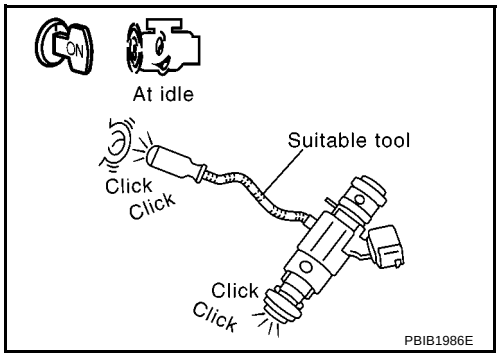

PBIB1986E

5. CHECK FUNCTION OF IGNITION COIL-I

CAUTION:
Do the following procedure in the place where ventilation is good without the combustible.

1. Turn ignition switch OFF.
2. Remove fuel pump fuse in IPDM E/R to release fuel pressure.

   NOTE:
   Do not use CONSULT-II to release fuel pressure, or fuel pressure applies again during the following procedure.
3. Start engine.
4. After engine stalls, crank it two or three times to release all fuel pressure.
5. Turn ignition switch OFF.
6. Remove all ignition coil harness connectors to avoid the electrical discharge from the ignition coils.
7. Remove ignition coil and spark plug of the cylinder to be checked.

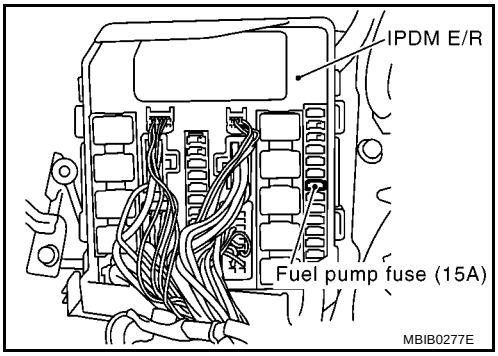

8. Crank engine for 5 seconds or more to remove combustion gas in the cylinder.
9. Connect spark plug and harness connector to ignition coil.
10. Fix ignition coil using a rope etc. with gap of 13 - 17 mm between the edge of the spark plug and grounded metal portion as shown in the figure.
11. Crank engine for about three seconds, and check whether spark is generated between the spark plug and the grounded metal portion.

    Spark should be generated.

    CAUTION:
    - **Do not approach to the spark plug and the ignition coil within 50cm. Be careful not to get an electrical shock while checking, because the electrical discharge voltage becomes 20kV or more.**
    - **It might cause to damage the ignition coil if the gap of more than 17 mm is taken.**

    NOTE:
    When the gap is less than 13 mm, the spark might be generated even if the coil is malfunctioning.

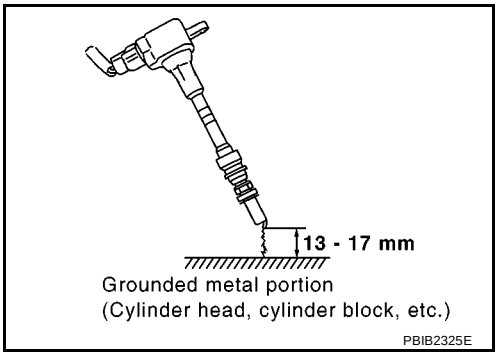

OK or NG

OK >> GO TO 9.
NG >> GO TO 6.

6. CHECK FUNCTION OF IGNITION COIL-II

1. Turn ignition switch OFF.
2. Disconnect spark plug and connect a known-good spark plug.
3. Crank engine for about three seconds, and recheck whether spark is generated between the spark plug and the grounded metal portion.

   Spark should be generated.

OK or NG

OK >> GO TO 7.
NG >> Check ignition coil, power transistor and their circuits. Refer to EC-1221, "IGNITION SIGNAL" .

7. CHECK SPARK PLUG

Check the initial spark plug for fouling, etc.

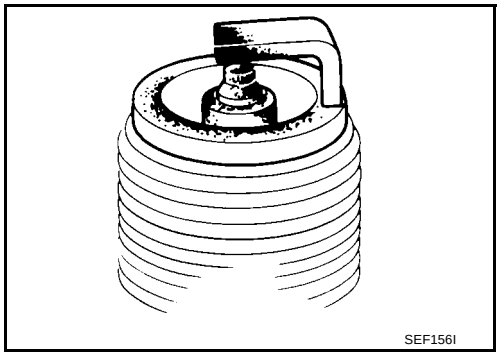

OK or NG

OK >> Replace spark plug(s) with standard type one(s). For spark plug type, refer to EM-133, "SPARK PLUG (PLATINUM-TIPPED TYPE)" .

NG >> 1. Repair or clean spark plug.
2. GO TO 8.

8. CHECK FUNCTION OF IGNITION COIL-III

1. Reconnect the initial spark plugs.
2. Crank engine for about three seconds, and recheck whether spark is generated between the spark plug and the grounded portion.

Spark should be generated.

OK or NG

OK >> **INSPECTION END**

NG >> Replace spark plug(s) with standard type one(s). For spark plug type, refer to EM-133, "SPARK PLUG (PLATINUM-TIPPED TYPE)" .

9. CHECK COMPRESSION PRESSURE

Check compression pressure. Refer to EM-173, "CHECKING COMPRESSION PRESSURE" .

OK or NG

OK >> GO TO 10.

NG >> Check pistons, piston rings, valves, valve seats and cylinder head gaskets.

10. CHECK FUEL PRESSURE

1. Install all removed parts.
2. Release fuel pressure to zero. Refer to EC-860, "FUEL PRESSURE RELEASE" .
3. Install fuel pressure gauge and check fuel pressure. Refer to EC-860, "FUEL PRESSURE CHECK" .

At idle: Approx. 350 kPa (3.5 bar, 3.57 kg/cm^2 , 51 psi)

OK or NG

OK >> GO TO 12.

NG >> GO TO 11.

11. DETECT MALFUNCTIONING PART

Check the following.

- Fuel pump and circuit (Refer to EC-1215, "FUEL PUMP" .)
- Fuel pressure regulator (Refer to EC-860, "FUEL PRESSURE CHECK" .)
- Fuel lines
- Fuel filter for clogging

>> Repair or replace.

12. CHECK IGNITION TIMING

Check the following items. Refer to EC-851, "Basic Inspection" .

Items	Specifications	
Target idle speed	A/T models	700 ± 50 rpm (in P or N position)
	M/T models	650 ± 50 rpm (in Neutral position)
Ignition timing	A/T models	6 ± 5° BTDC (in P or N position)
	M/T models	6 ± 5° BTDC (in Neutral position)

OK or NG

OK >> GO TO 13.
NG >> Follow the EC-851, "Basic Inspection" .

13. CHECK HEATED OXYGEN SENSOR 1

Refer to EC-975, "Component Inspection" .

OK or NG

OK >> GO TO 14.
NG >> Replace heated oxygen sensor 1.

14. CHECK MASS AIR FLOW SENSOR

With CONSULT-II
Check mass air flow sensor signal in “DATA MONITOR” mode with CONSULT-II.

1.0 - 4.0 g·m/sec: at idling
2.0 - 10.0 g·m/sec: at 2,500 rpm

With GST
Check mass air flow sensor signal in Service $01 with GST.

1.0 - 4.0 g·m/sec: at idling
2.0 - 10.0 g·m/sec: at 2,500 rpm

OK or NG

OK >> GO TO 15.
NG >> Check connectors for rusted terminals or loose connections in the mass air flow sensor circuit or ground. Refer to EC-935, "DTC P0102, P0103 MAF SENSOR" .

15. CHECK SYMPTOM MATRIX CHART

Check items on the rough idle symptom in EC-871, "Symptom Matrix Chart" .

OK or NG

OK >> GO TO 16.
NG >> Repair or replace.

16. ERASE THE 1ST TRIP DTC

Some tests may cause a 1st trip DTC to be set.
Erase the 1st trip DTC from the ECM memory after performing the tests. Refer to EC-841, "HOW TO ERASE EMISSION-RELATED DIAGNOSTIC INFORMATION" .

>> GO TO 17.

17. CHECK INTERMITTENT INCIDENT

Refer to EC-917, "TROUBLE DIAGNOSIS FOR INTERMITTENT INCIDENT" .

>> **INSPECTION END**

DTC P0327, P0328 KS

PFP:22060

Component Description

BBS004DN

The knock sensor (1) is attached to the cylinder block. It senses engine knocking using a piezoelectric element. A knocking vibration from the cylinder block is sensed as vibrational pressure. This pressure is converted into a voltage signal and sent to the ECM.

- ⇦: Vehicle front

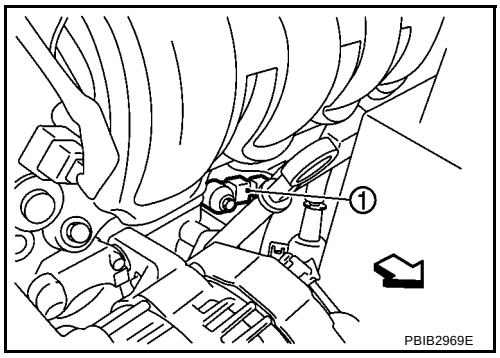

On Board Diagnosis Logic

BBS004DO

The MI will not light up for these self-diagnoses.

DTC No.	Trouble Diagnosis Name	DTC Detected Condition	Possible Cause
P0327 0327	Knock sensor circuit low input	An excessively low voltage from the sensor is sent to ECM.	● Harness or connectors (The sensor circuit is open or shorted.) ● Knock sensor
P0328 0328	Knock sensor circuit high input	An excessively high voltage from the sensor is sent to ECM.	

DTC Confirmation Procedure

BBS004DP

NOTE:
If DTC Confirmation Procedure has been previously conducted, always turn ignition switch OFF and wait at least 10 seconds before conducting the next test.
TESTING CONDITION:
Before performing the following procedure, confirm that battery voltage is more than 10V at idle.

WITH CONSULT-II

1. Turn ignition switch ON and select “DATA MONITOR” mode with CONSULT-II.
2. Start engine and run it for at least 5 seconds at idle speed.
3. If 1st trip DTC is detected, go to EC-1040, "Diagnostic Procedure" .

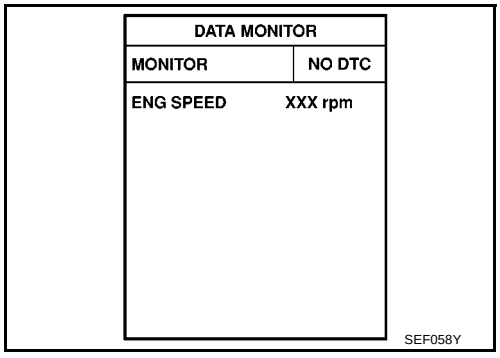

WITH GST

Follow the procedure “WITH CONSULT-II” above.

Wiring Diagram

BBS004DQ

EC-KS-01

: DETECTABLE LINE FOR DTC
: NON-DETECTABLE LINE FOR DTC

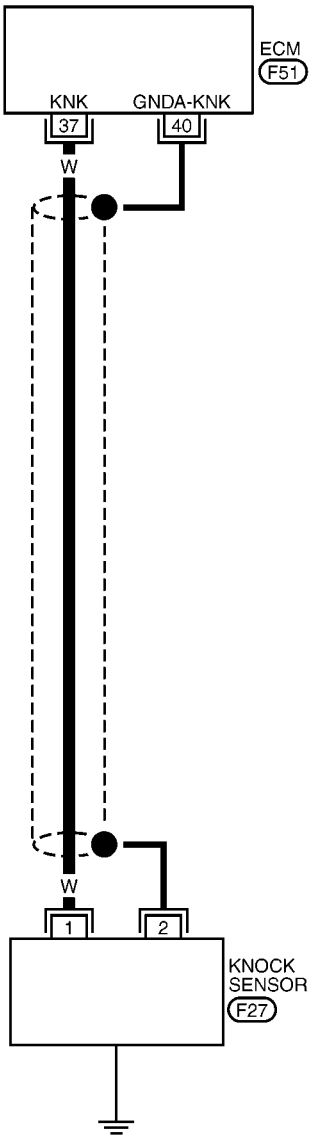

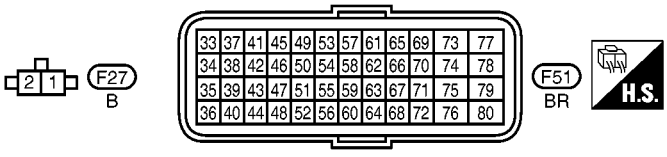

MBWA1467E

Specification data are reference values and are measured between each terminal and ground.

CAUTION:
Do not use ECM ground terminals when measuring input/output voltage. Doing so may result in damage to the ECM's transistor. Use a ground other than ECM terminals, such as the ground.

TERMINAL NO.	WIRE COLOR	ITEM	CONDITION	DATA (DC Voltage)
37	W	Knock sensor	**[Engine is running]** ● Idle speed	Approximately 2.5V
40	—	Sensor ground (Knock sensor)	**[Engine is running]** ● **Warm-up condition** ● Idle speed	Approximately 0V

Diagnostic Procedure

BBS004DR

1. CHECK KNOCK SENSOR INPUT SIGNAL CIRCUIT-I

1. Turn ignition switch OFF.
2. Disconnect ECM harness connector.
3. Check resistance between ECM terminal 37 and ground. Refer to Wiring Diagram.
   NOTE:
   It is necessary to use an ohmmeter which can measure more than 10 MΩ.

   Resistance: Approximately 530 - 590kΩ [at 20°C (68°F)]
4. Also check harness for short to ground and short to power.

OK or NG

OK >> GO TO 4.
NG >> GO TO 2.

2. CHECK KNOCK SENSOR INPUT SIGNAL CIRCUIT-II

1. Disconnect knock sensor (1) harness connector.

– ⇦: Vehicle front

2. Check harness continuity between ECM terminal 37 and knock sensor terminal 1.
   Refer to Wiring Diagram.

   Continuity should exist.
3. Also check harness for short to ground and short to power.

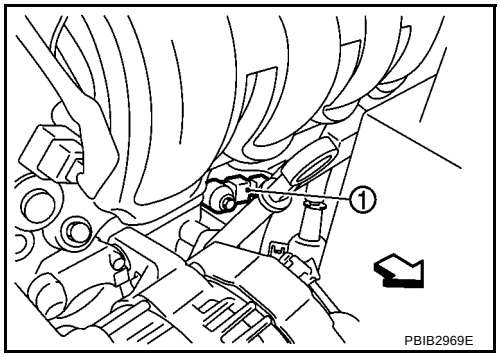

OK or NG

OK >> GO TO 3.
NG >> Repair open circuit or short to ground or short to power in harness or connectors.

3. CHECK KNOCK SENSOR

Refer to EC-1041, "Component Inspection" .

OK or NG

OK >> GO TO 6.
NG >> Replace knock sensor.

4. CHECK GROUND CONNECTIONS

Loosen and retighten ground screws on the body.
Refer to EC-924, "Ground Inspection" .

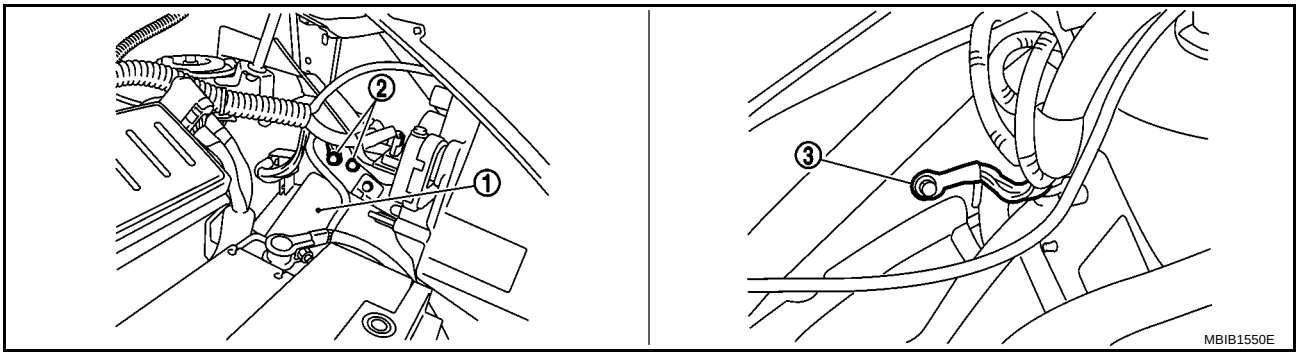

1. IPDM E/R
2. Body ground
3. Body ground

OK or NG

OK >> GO TO 5.
NG >> Repair or replace ground connections.

5. CHECK KNOCK SENSOR SHIELD CIRCUIT FOR OPEN AND SHORT

1. Reconnect knock sensor harness connector.
2. Check harness continuity between ECM terminal 40 and knock sensor terminal 2.

Continuity should exist

3. Also check harness for short to ground and short to power.

OK or NG

OK >> GO TO 6.
NG >> Repair open circuit or short to ground or short to power in harness or connectors.

6. CHECK INTERMITTENT INCIDENT

Refer to EC-917, "TROUBLE DIAGNOSIS FOR INTERMITTENT INCIDENT" .

>> **INSPECTION END**

Component Inspection

BBS004DS

KNOCK SENSOR

Check resistance between knock sensor terminal 1 and ground.

NOTE:
It is necessary to use an ohmmeter which can measure more than 10 MΩ.

Resistance: Approximately 530 - 590kΩ [at 20°C (68°F)]

CAUTION:
Do not use any knock sensors that have been dropped or physically damaged. Use only new ones.

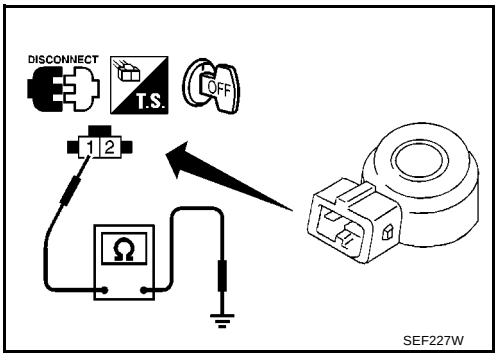

Removal and Installation

BBS004DT

KNOCK SENSOR

Refer to EM-189, "CYLINDER BLOCK" .

DTC P0335 CKP SENSOR (POS)

PFP:23731

Component Description

BBS004DU

The crankshaft position sensor (POS) is located on the cylinder block rear housing facing the gear teeth (cogs) of the signal plate at the end of the crankshaft. It detects the fluctuation of the engine revolution.
The sensor consists of a permanent magnet and Hall IC.
When the engine is running, the high and low parts of the teeth cause the gap with the sensor to change.
The changing gap causes the magnetic field near the sensor to change.
Due to the changing magnetic field, the voltage from the sensor changes.
The ECM receives the voltage signal and detects the fluctuation of the engine revolution.
ECM receives the signals as shown in the figure.

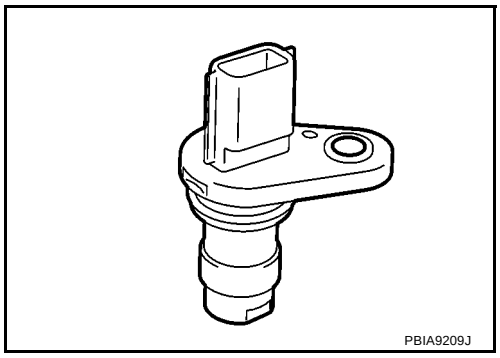

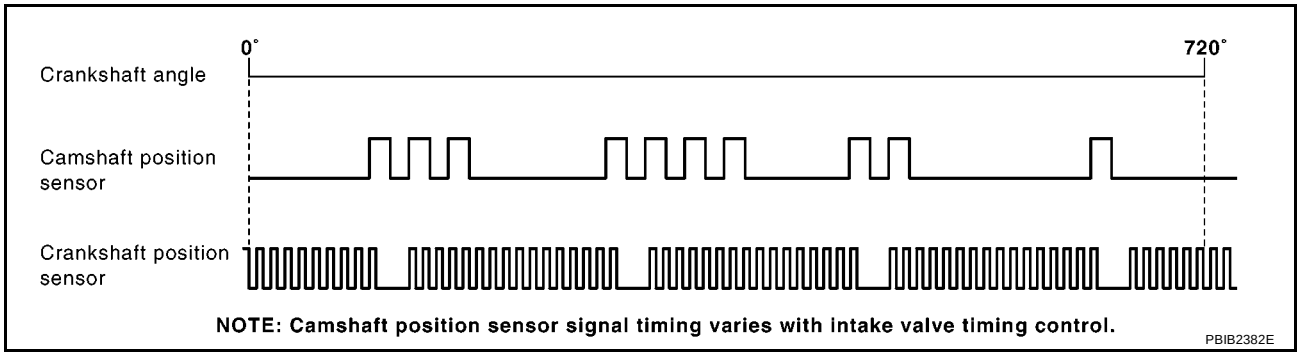

CONSULT-II Reference Value in Data Monitor Mode

BBS004DV

Specification data are reference values.

MONITOR ITEM	CONDITION	SPECIFICATION
ENG SPEED	● Run engine and compare CONSULT-II value with the tachometer indication.	Almost the same speed as the tachometer indication.

On Board Diagnosis Logic

BBS004DW

DTC No.	Trouble diagnosis name	DTC detecting condition	Possible cause
P0335 0335	Crankshaft position sensor (POS) circuit	● The crankshaft position sensor (POS) signal is not detected by the ECM during the first few seconds of engine cranking. ● The proper pulse signal from the crankshaft position sensor (POS) is not sent to ECM while the engine is running. ● The crankshaft position sensor (POS) signal is not in the normal pattern during engine running.	● Harness or connectors [Crankshaft position sensor (POS) circuit is open or shorted.] (Accelerator pedal position sensor circuit is shorted.) (Refrigerant pressure sensor circuit is shorted.) ● Crankshaft position sensor (POS) ● Accelerator pedal position sensor ● Refrigerant position sensor ● Signal plate

DTC Confirmation Procedure

BBS004DX

NOTE:
If DTC Confirmation Procedure has been previously conducted, always turn ignition switch OFF and wait at least 10 seconds before conducting the next test.
TESTING CONDITION:
Before performing the following procedure, confirm that battery voltage is more than 10.5V with ignition switch ON.

WITH CONSULT-II

1. Turn ignition switch ON and select “DATA MONITOR” mode with CONSULT-II.
2. Crank engine for at least 2 seconds and run it for at least 5 seconds at idle speed.
3. If 1st trip DTC is detected, go to EC-1046, "Diagnostic Procedure" .

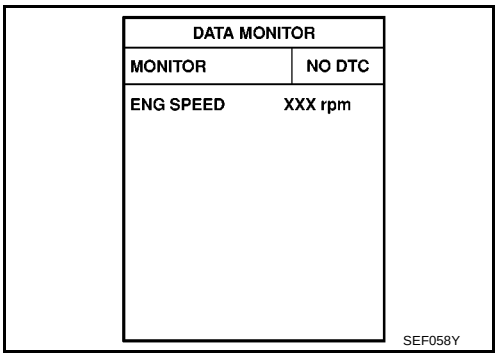

WITH GST

Follow the procedure “WITH CONSULT-II” above.

Wiring Diagram

BBS004DY

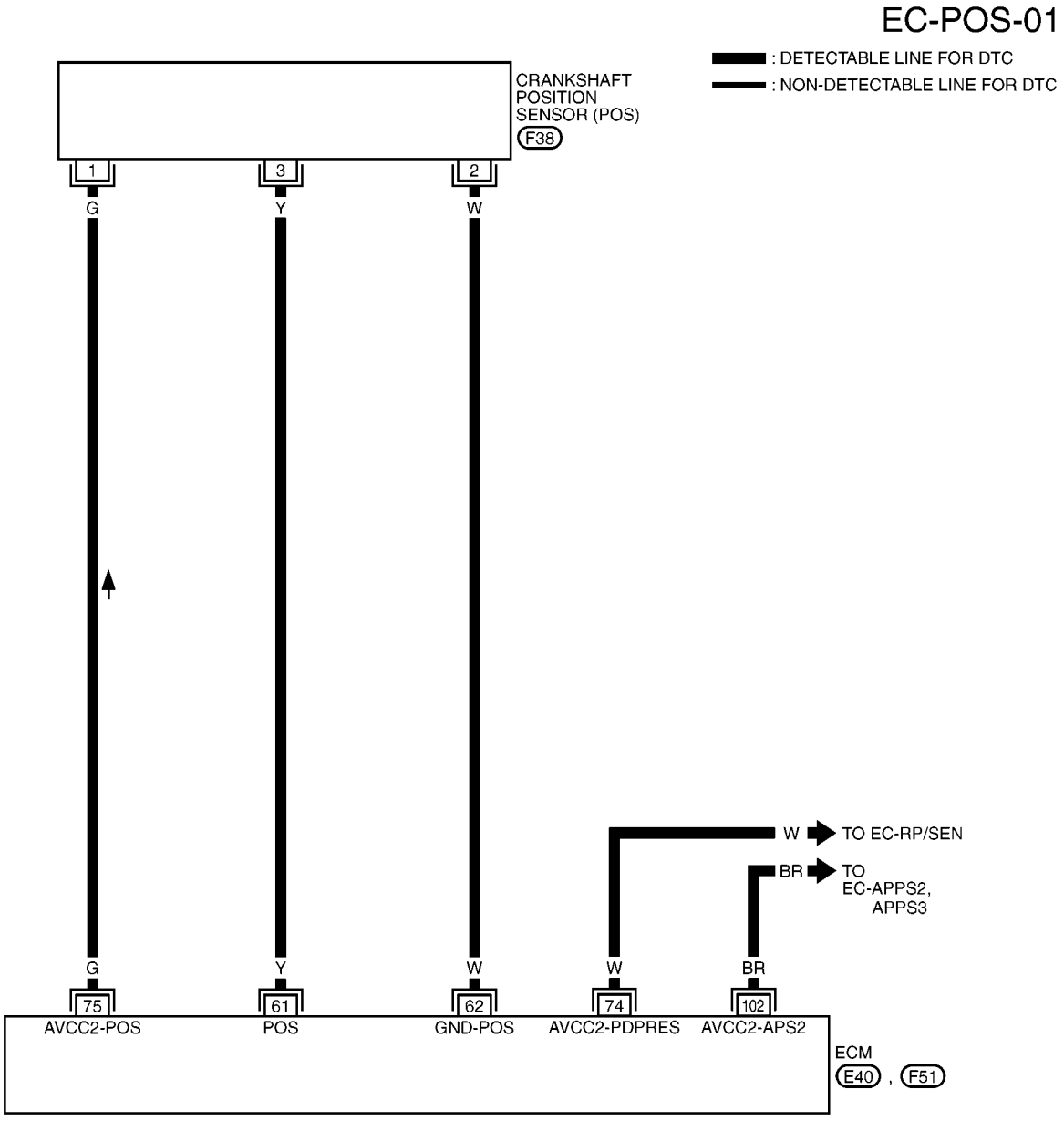

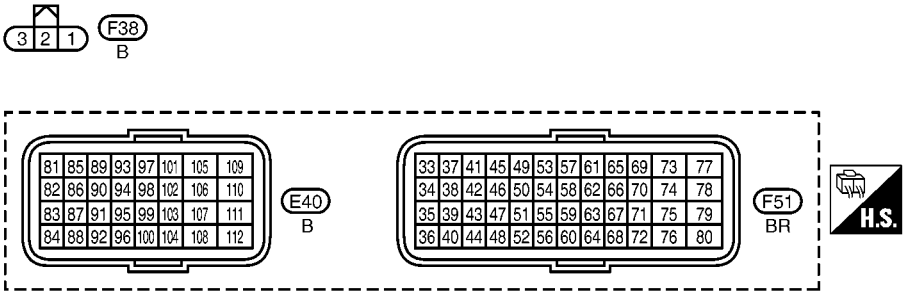

MBWA1468E

Specification data are reference values and are measured between each terminal and ground.
Pulse signal is measured by CONSULT-II.

CAUTION:
Do not use ECM ground terminals when measuring input/output voltage. Doing so may result in damage to the ECM's transistor. Use a ground other than ECM terminals, such as the ground.

TERMINAL NO.	WIRE COLOR	ITEM	CONDITION	DATA (DC Voltage)
61	Y	Crankshaft position sensor (POS)	**[Engine is running]** ● **Warm-up condition** ● Idle speed **NOTE:** The pulse cycle changes depending on rpm at idle	0 - 1.0V★ 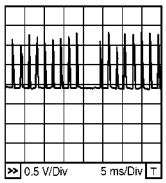 MBIB1453E
			[Engine is running] ● Engine speed: 2,000 rpm	0 - 1.0V★ 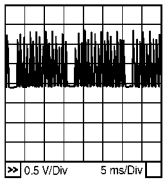 MBIB1454E
62	W	Sensor ground [Crankshaft position sensor (POS)]	**[Engine is running]** ● **Warm-up condition** ● Idle speed	Approximately 0V
74	W	Sensor power supply (Refrigerant pressure sensor)	**[Ignition switch: ON]**	Approximately 5V
75	G	Sensor power supply [Crankshaft position sensor (POS)]	**[Ignition switch: ON]**	Approximately 5V
102	BR	Sensor power supply (APP sensor 2)	**[Ignition switch: ON]**	Approximately 5V

★: Average voltage for pulse signal (Actual pulse signal can be confirmed by oscilloscope.)

Diagnostic Procedure

BBS004DZ

1. CHECK GROUND CONNECTIONS

1. Turn ignition switch OFF.
2. Loosen and retighten ground screws on the body.
   Refer to EC-924, "Ground Inspection" .

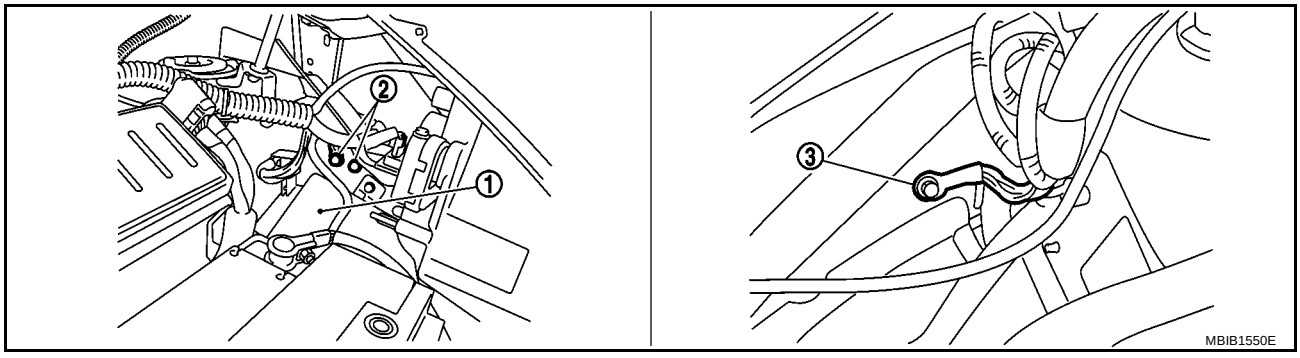

1. IPDM E/R
2. Body ground
3. Body ground

OK or NG

OK >> GO TO 2.
NG >> Repair or replace ground connections.

2. CHECK CRANKSHAFT POSITION (CKP) SENSOR (POS) POWER SUPPLY CIRCUIT-I

1. Disconnect crankshaft position (CKP) sensor (POS) (1) harness connector.
2. Turn ignition switch ON.

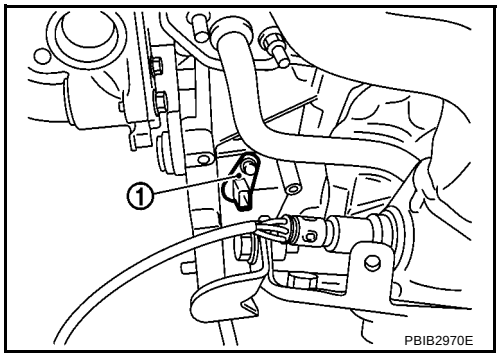

3. Check voltage between CKP sensor (POS) terminal 1 and ground with CONSULT-II or tester.

   Voltage: Approximately 5V

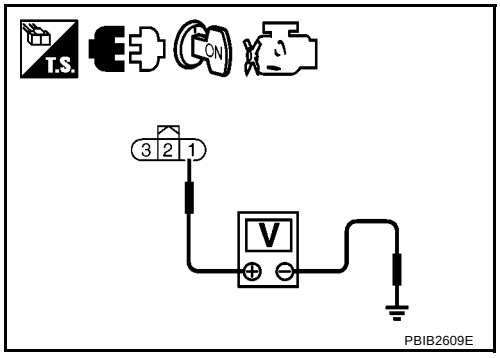

OK or NG

OK >> GO TO 6.
NG >> GO TO 3.

3. CHECK CKP SENSOR (POS) POWER SUPPLY CIRCUIT-II

1. Turn ignition switch OFF.
2. Disconnect ECM harness connector.
3. Check harness continuity between CKP sensor (POS) terminal 1 and ECM terminal 75. Refer to Wiring Diagram.

Continuity should exist.

OK or NG

OK >> GO TO 4.
NG >> Repair open circuit.

4. CHECK CKP SENSOR (POS) POWER SUPPLY CIRCUIT-III

Check harness for short to power and short to ground, between the following terminals.

ECM terminal	Sensor terminal	Reference Wiring Diagram
74	Refrigerant pressure sensor terminal 3	EC-1232, "Wiring Diagram"
75	Crankshaft position sensor (POS) terminal 1	EC-1044, "Wiring Diagram"
102	APP sensor terminal 5	EC-1183, "Wiring Diagram"

OK or NG

OK >> GO TO 5.
NG >> Repair short to ground or short to power in harness or connectors.

5. CHECK COMPONENTS

Check the following.

- Accelerator pedal position sensor (Refer to EC-1190, "Component Inspection" .)
- Refrigerant pressure sensor (Refer to ATC-85, "Refrigerant Pressure Sensor" .)

OK or NG

OK >> GO TO 10.
NG >> Replace malfunctioning component.

6. CHECK CKP SENSOR (POS) GROUND CIRCUIT FOR OPEN AND SHORT

1. Turn ignition switch OFF.
2. Disconnect ECM harness connector.
3. Check harness continuity between CKP sensor (POS) terminal 2 and ECM terminal 62. Refer to Wiring Diagram.

Continuity should exist.

4. Also check harness for short to ground and short to power.

OK or NG

OK >> GO TO 7.
NG >> Repair open circuit or short to ground or short to power in harness or connectors.

7. CHECK CKP SENSOR (POS) INPUT SIGNAL CIRCUIT FOR OPEN AND SHORT

1. Check harness continuity between CKP sensor (POS) terminal 3 and ECM terminal 61. Refer to Wiring Diagram.

Continuity should exist.

2. Also check harness for short to ground and short to power.

OK or NG

OK >> GO TO 8.
NG >> Repair open circuit or short to ground or short to power in harness or connectors.

8. CHECK CRANKSHAFT POSITION SENSOR (POS)

Refer to EC-1048, "Component Inspection" .

OK or NG

OK >> GO TO 9.
NG >> Replace crankshaft position sensor (POS).

9. CHECK GEAR TOOTH

Visually check for chipping signal plate gear tooth.

OK or NG

OK >> GO TO 10.
NG >> Replace the signal plate.

10. CHECK INTERMITTENT INCIDENT

Refer to EC-917, "TROUBLE DIAGNOSIS FOR INTERMITTENT INCIDENT" .

>> **INSPECTION END**

Component Inspection

BBS004E0

CRANKSHAFT POSITION SENSOR (POS)

1. Loosen the fixing bolt of the sensor.
2. Disconnect crankshaft position sensor (POS) harness connector.
3. Remove the sensor.
4. Visually check the sensor for chipping.

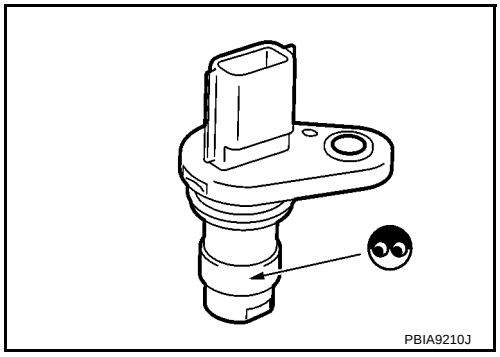

5. Check resistance as shown in the figure.

Terminal No. (Polarity)	Resistance Ω [at 25°C (77°F)]
1 (+) - 2 (-)	Except 0 or ∞
1 (+) - 3 (-)	
2 (+) - 3 (-)	

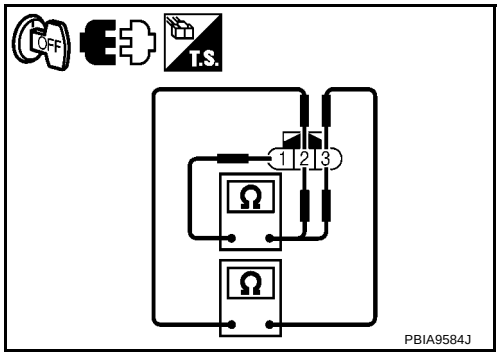

6. If NG, replace crankshaft position sensor (POS).

Removal and Installation

BBS004E1

CRANKSHAFT POSITION SENSOR (POS)

Refer to EM-189, "CYLINDER BLOCK" .

DTC P0340 CMP SENSOR (PHASE)

PFP:23731

Component Description

BBS004E2

The camshaft position sensor (PHASE) senses the protrusion of camshaft (INT) to identify a particular cylinder. The camshaft position sensor (PHASE) senses the piston position.
When the crankshaft position sensor (POS) system becomes inoperative, the camshaft position sensor (PHASE) provides various controls of engine parts instead, utilizing timing of cylinder identification signals.
The sensor consists of a permanent magnet and Hall IC.
When engine is running, the high and low parts of the teeth cause the gap with the sensor to change.
The changing gap causes the magnetic field near the sensor to change.
Due to the changing magnetic field, the voltage from the sensor changes.
ECM receives the signals as shown in the figure.

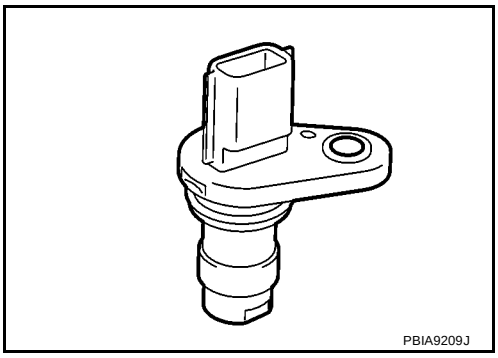

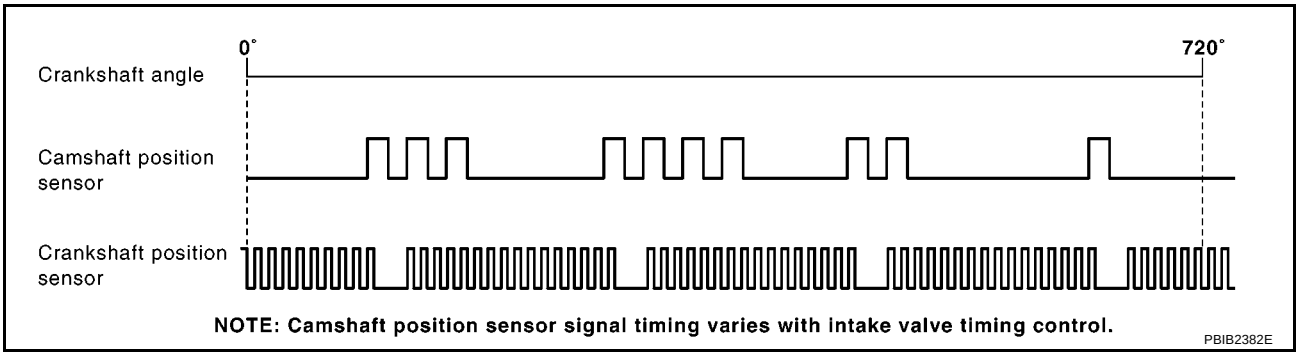

On Board Diagnosis Logic

BBS004E3

NOTE:
If DTC P0340 is displayed with DTC P1229, first perform the trouble diagnosis for DTC P1229. Refer to **EC-1150, "DTC P1229 SENSOR POWER SUPPLY"** **.**

DTC No.	Trouble diagnosis name	DTC detecting condition	Possible cause
P0340 0340	Camshaft position sensor (PHASE) circuit	● The cylinder No. signal is not sent to ECM for the first few seconds during engine cranking. ● The cylinder No. signal is not set to ECM during engine running. ● The cylinder No. signal is not in the normal pattern during engine running.	● Harness or connectors (The sensor circuit is open or shorted.) ● Camshaft position sensor (PHASE) ● Camshaft (Intake) ● Starter motor (Refer to SC-45, "STARTING SYSTEM" .) ● Starting system circuit (Refer to SC-45, "STARTING SYSTEM" .) ● Dead (Weak) battery

DTC Confirmation Procedure

BBS004E4

NOTE:
If DTC Confirmation Procedure has been previously conducted, always turn ignition switch OFF and wait at least 10 seconds before conducting the next test.
TESTING CONDITION:
Before performing the following procedure, confirm that battery voltage is more than 10.5V with ignition switch ON.

WITH CONSULT-II

1. Turn ignition switch ON.
2. Select “DATA MONITOR” mode with CONSULT-II.
3. Crank engine for at least 2 seconds and run it for at least 5 seconds at idle speed.
4. If 1st trip DTC is detected, go to EC-1052, "Diagnostic Procedure" .
   If 1st trip DTC is not detected, go to next step.
5. Maintain engine speed at more than 800 rpm for at least 5 seconds.
6. If 1st trip DTC is detected, go to EC-1052, "Diagnostic Procedure" .

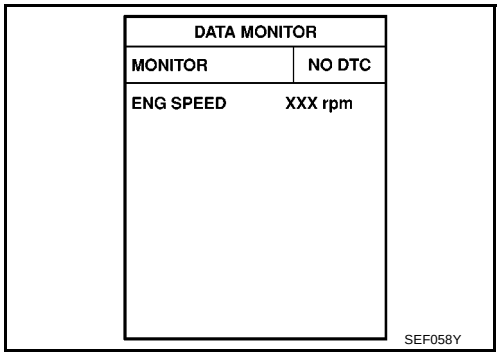

WITH GST

Follow the procedure “WITH CONSULT-II” above.

Wiring Diagram

BBS004E5

EC-PHASE-01

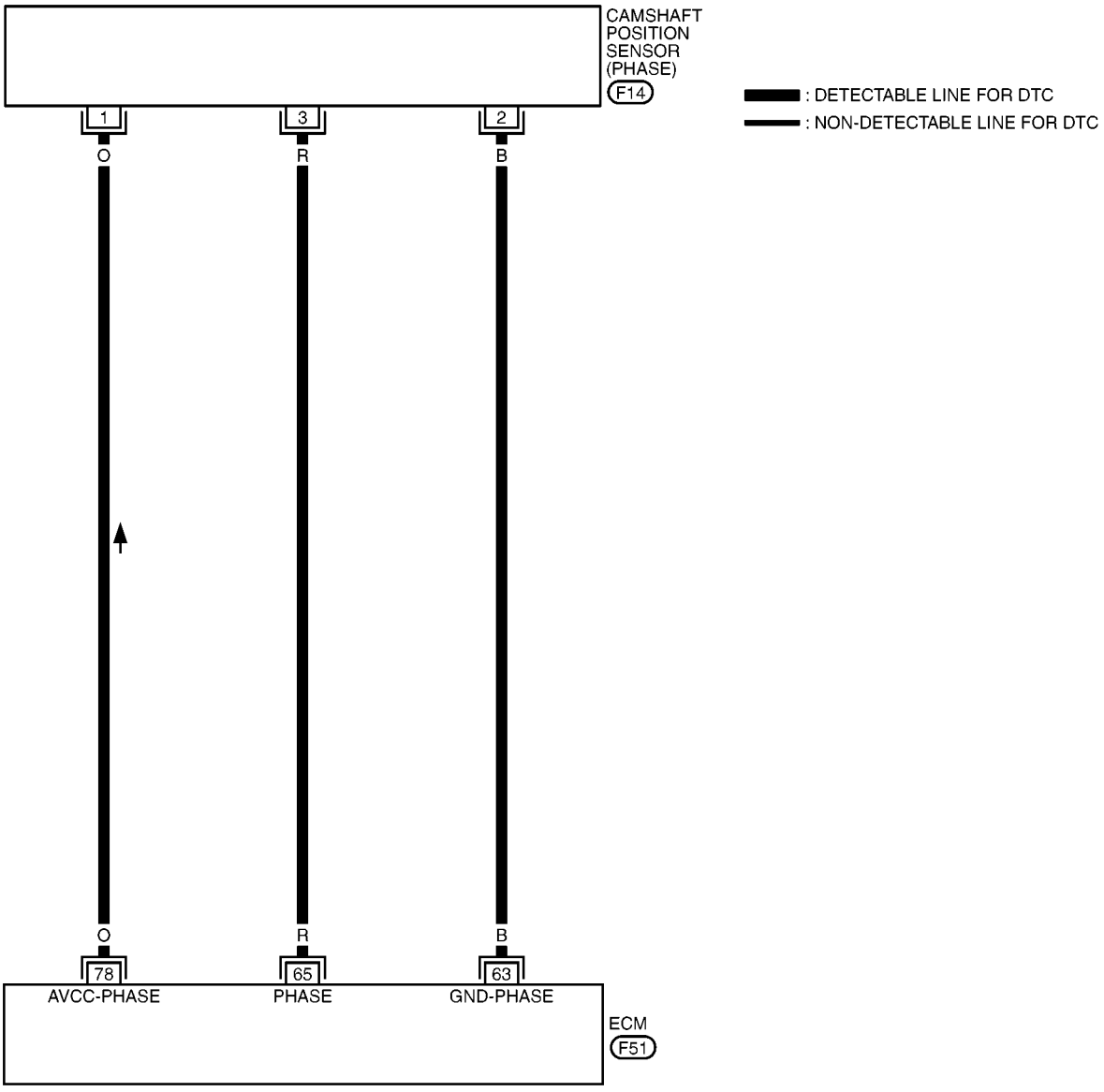

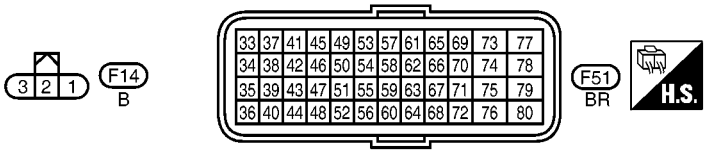

MBWA1469E

Specification data are reference values and are measured between each terminal and ground.
Pulse signal is measured by CONSULT-II.

CAUTION:
Do not use ECM ground terminals when measuring input/output voltage. Doing so may result in damage to the ECM's transistor. Use a ground other than ECM terminals, such as the ground.

TERMINAL NO.	WIRE COLOR	ITEM	CONDITION	DATA (DC Voltage)
63	B	Sensor ground [Camshaft position sensor (PHASE)]	**[Engine is running]** ● **Warm-up condition** ● Idle speed	Approximately 0V
65	R	Camshaft position sensor (PHASE)	**[Engine is running]** ● **Warm-up condition** ● Idle speed **NOTE:** The pulse cycle changes depending on rpm at idle	0 - 1.0V★ 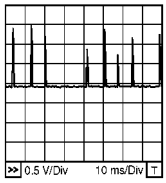 MBIB1455E
			[Engine is running] ● Engine speed: 2,000 rpm	0 - 1.0V★ 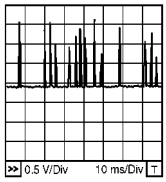 MBIB1456E
78	O	Sensor power supply [Camshaft position sensor (PHASE)]	**[Ignition switch: ON]**	Approximately 5V

★: Average voltage for pulse signal (Actual pulse signal can be confirmed by oscilloscope.)

Diagnostic Procedure

BBS004E6

1. CHECK STARTING SYSTEM

Turn ignition switch to START position.

Does the engine turn over?

Does the starter motor operate?

Yes or No

Yes >> GO TO 2.
No >> Check starting system. (Refer to SC-45, "STARTING SYSTEM" .)

2. CHECK GROUND CONNECTIONS

1. Turn ignition switch OFF.
2. Loosen and retighten ground screws on the body.
   Refer to EC-924, "Ground Inspection" .

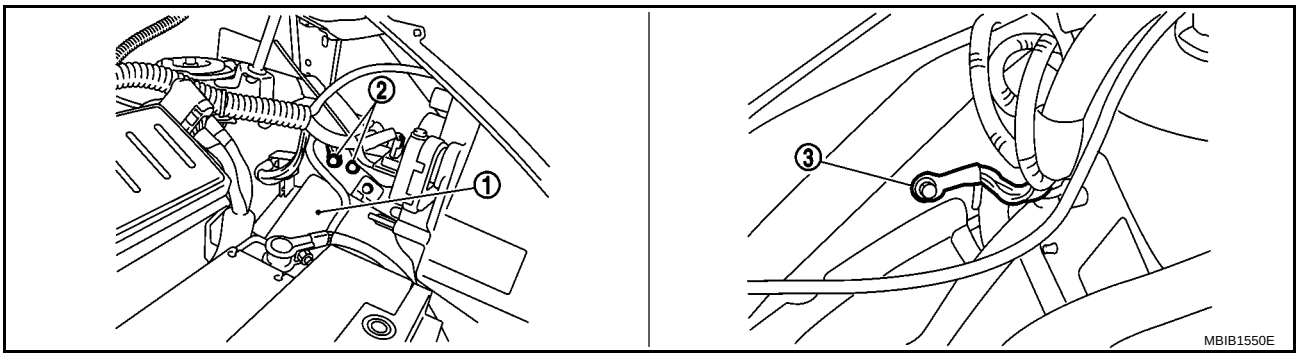

1. IPDM E/R
2. Body ground
3. Body ground

OK or NG

OK >> GO TO 3.
NG >> Repair or replace ground connections.

3. CHECK CAMSHAFT POSITION (CMP) SENSOR (PHASE) POWER SUPPLY CIRCUIT

1. Disconnect camshaft position (CMP) sensor (PHASE) (1) harness connector.

– ⇦: Vehicle front

2. Turn ignition switch ON.

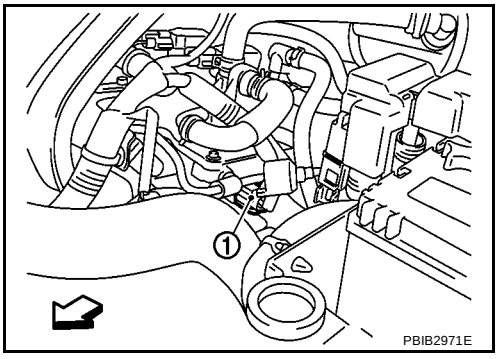

3. Check voltage between CMP sensor (PHASE) terminal 1 and ground with CONSULT-II or tester.

Voltage: Battery voltage

OK or NG

OK >> GO TO 4.
NG >> Repair open circuit or short to ground or short to power in harness or connectors.

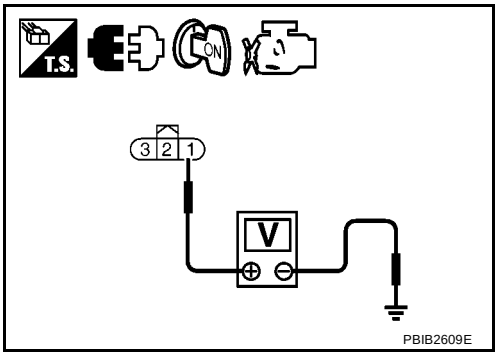

4. CHECK CMP SENSOR (PHASE) GROUND CIRCUIT FOR OPEN AND SHORT

1. Turn ignition switch OFF.
2. Disconnect ECM harness connector.
3. Check harness continuity between CMP sensor (PHASE) terminal 2 and ECM terminal 63. Refer to Wiring Diagram.

Continuity should exist.

4. Also check harness for short to ground and short to power.

OK or NG

OK >> GO TO 5.
NG >> Repair open circuit or short to ground or short to power in harness or connectors.

5. CHECK CMP SENSOR (PHASE) INPUT SIGNAL CIRCUIT FOR OPEN AND SHORT

1. Check harness continuity between CMP sensor (PHASE) terminal 3 and ECM terminal 65. Refer to Wiring Diagram.

Continuity should exist.

2. Also check harness for short to ground and short to power.

OK or NG

OK >> GO TO 6.
NG >> Repair open circuit or short to ground or short to power in harness or connectors.

6. CHECK CAMSHAFT POSITION SENSOR (PHASE)

Refer to EC-1054, "Component Inspection" .

OK or NG

OK >> GO TO 7.
NG >> Replace camshaft position sensor (PHASE).

7. CHECK CAMSHAFT (INTAKE)

Check the following.

- Accumulation of debris to the signal plate of camshaft (1) rear end
- Chipping signal plate of camshaft rear end

OK or NG

OK >> GO TO 8.
NG >> Remove debris and clean the signal plate of camshaft rear end or replace camshaft.

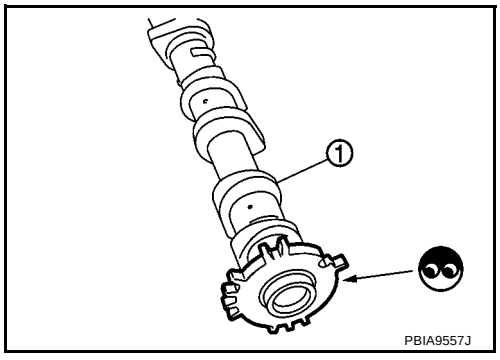

8. CHECK INTERMITTENT INCIDENT

Refer to EC-917, "TROUBLE DIAGNOSIS FOR INTERMITTENT INCIDENT" .

>> **INSPECTION END**

Component Inspection

BBS004E7

CAMSHAFT POSITION SENSOR (PHASE)

1. Loosen the fixing bolt of the sensor.
2. Disconnect camshaft position sensor (PHASE) harness connector.
3. Remove the sensor.

4. Visually check the sensor for chipping.

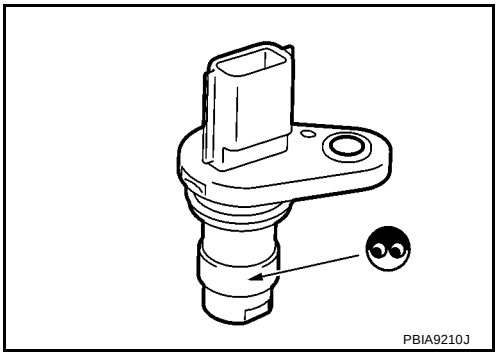

5. Check resistance as shown in the figure.

Terminal No. (Polarity)	Resistance Ω [at 25°C (77°F)]
1 (+) - 2 (-)	Except 0 or ∞
1 (+) - 3 (-)	
2 (+) - 3 (-)	

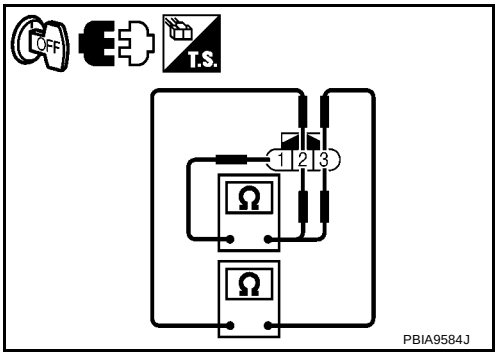

BBS004E8

Removal and Installation

CAMSHAFT POSITION SENSOR (PHASE)

Refer to EM-151, "CAMSHAFT" .

DTC P0420 THREE WAY CATALYST FUNCTION

PFP:20905

On Board Diagnosis Logic

BBS004E9

The ECM monitors the switching frequency ratio of heated oxygen sensors 1 and 2.
A three way catalyst (manifold) with high oxygen storage capacity will indicate a low switching frequency of heated oxygen sensor 2. As oxygen storage capacity decreases, the heated oxygen sensor 2 switching frequency will increase.
When the frequency ratio of heated oxygen sensors 1 and 2 approaches a specified limit value, the three way catalyst (manifold) malfunction is diagnosed.

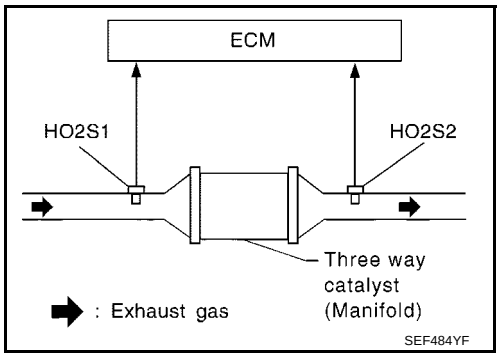

DTC No.	Trouble diagnosis name	DTC detecting condition	Possible cause
P0420 0420	Catalyst system efficiency below threshold	● Three way catalyst (manifold) does not operate properly. ● Three way catalyst (manifold) does not have enough oxygen storage capacity.	● Three way catalyst (manifold) ● Exhaust tube ● Intake air leaks ● Fuel injector ● Fuel injector leaks ● Spark plug ● Improper ignition timing

DTC Confirmation Procedure

BBS004EA

NOTE:
If DTC Confirmation Procedure has been previously conducted, always turn ignition switch OFF and wait at least 10 seconds before conducting the next test.

WITH CONSULT-II

TESTING CONDITION:

- **Open engine hood before conducting the following procedure.**
- **Do not hold engine speed for more than the specified minutes below.**

1. Start engine and warm it up to the normal operating temperature.
2. Turn ignition switch OFF and wait at least 10 seconds.
3. Start engine and keep the engine speed between 3,500 and 4,000 rpm for at least 1 minute under no load.
4. Let engine idle for 1 minute.
5. Select “DTC & SRT CONFIRMATION” then “SRT WORK SUPPORT” mode with CONSULT-II.
6. Start engine.
7. Rev engine up to 2,000 to 3,000 rpm and hold it for 3 consecutive minutes then release the accelerator pedal completely.
   If “INCMP” of “CATALYST” changed to “COMPLT”, go to step 10
8. Wait 5 seconds at idle.

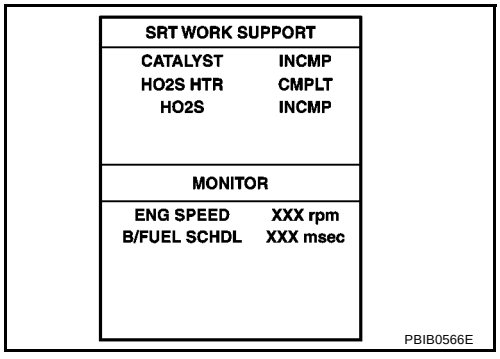

9. Rev engine up to 2,000 to 3,000 rpm and maintain it until “INCMP” of “CATALYST” changes to “CMPLT” (It will take approximately 5 minutes).
If not “CMPLT”, stop engine and cool it down to less than 70°C (158°F) and then retest from step 1.

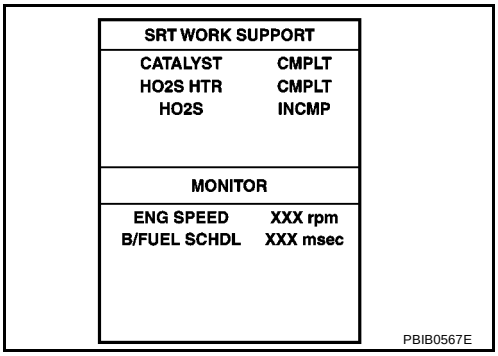

a. Turn ignition switch OFF and leave the vehicle in a cool place (soak the vehicle)
b. Turn ignition switch ON and select “COOLAN TEMP/S” in “DATA MONITOR” mode with CONSULT-II.
c. Start engine and warm it up while monitoring “COOLAN TEMP/S” indication on CONSULT-II.
d. When “COOLAN TEMP/S” indication reaches to 70°(158°F), go to step 3.

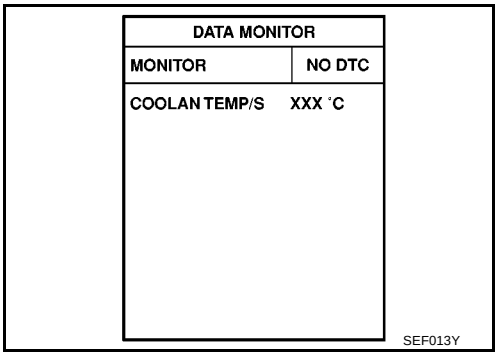

10. Select “SELF-DIAG RESULTS” mode with CONSULT-II.
11. Confirm that the 1st trip DTC is not detected.
If the 1st trip DTC is detected, go to EC-1059, "Diagnostic Procedure" .

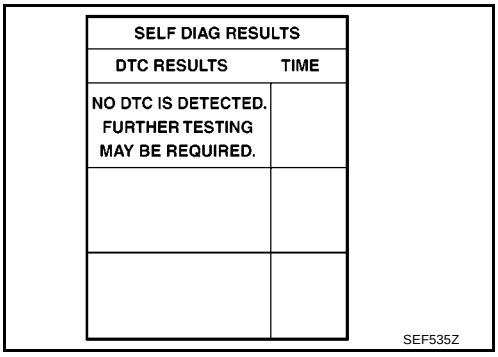

Overall Function Check

BBS004EB

Use this procedure to check the overall function of the three way catalyst (manifold). During this check, a 1st trip DTC might not be confirmed.

WITH GST

1. Start engine and warm it up to the normal operating temperature.
2. Turn ignition switch OFF and wait at least 10 seconds.
3. Start engine and keep the engine speed between 3,500 and 4,000 rpm for at least 1 minute under no load.
4. Let engine idle for 1 minute.
5. Set voltmeters probes between ECM terminal 49 (HO2S1 signal) and ground, and ECM terminal 50 (HO2S2 signal) and ground.
6. Keep engine speed at 2,000 rpm constant under no load.

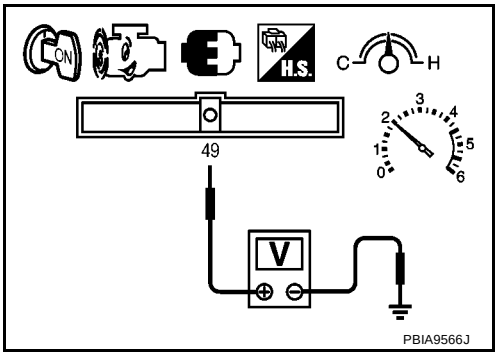

7. Make sure that the voltage switching frequency (high & low) between ECM terminal 50 and ground is very less than that of ECM terminal 49 and ground.
   Switching frequency ratio = A/B
   A: Heated oxygen sensor 2 voltage switching frequency
   B: Heated oxygen sensor 1 voltage switching frequency
   This ratio should be less than 0.75.
   If the ratio is greater than above, it means three way catalyst does not operate properly. Go to EC-1059, "Diagnostic Procedure" .

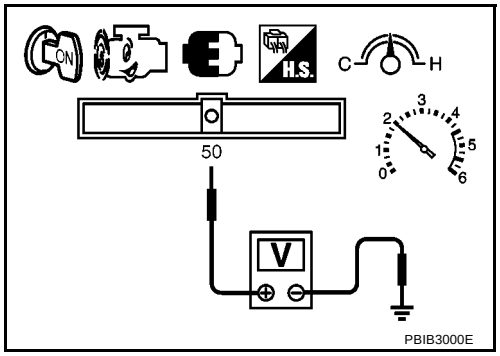

NOTE:
If the voltage at terminal 49 does not switch periodically more than 5 times within 10 seconds at step 7, perform trouble diagnosis for DTC P0133 first. (See EC-967, "DTC P0133 HO2S1" .)

Diagnostic Procedure

BBS004EC

1. CHECK EXHAUST SYSTEM

Visually check exhaust tubes and muffler for dent.

OK or NG

OK >> GO TO 2.
NG >> Repair or replace.

2. CHECK EXHAUST GAS LEAK

1. Start engine and run it at idle.
2. Listen for an exhaust gas leak before the three way catalyst (manifold).

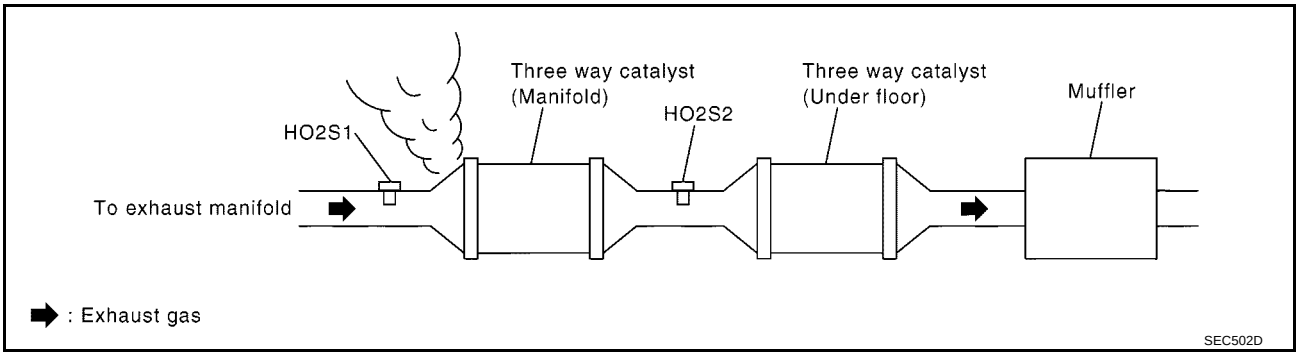

OK or NG

OK >> GO TO 3.
NG >> Repair or replace.

3. CHECK INTAKE AIR LEAK

Listen for an intake air leak after the mass air flow sensor.

OK or NG

OK >> GO TO 4.
NG >> Repair or replace.

4. CHECK IGNITION TIMING

Check the following items. Refer to EC-851, "Basic Inspection" .

Items	Specifications	
Target idle speed	A/T models	700 ± 50 rpm (in P or N position)
	M/T models	650 ± 50 rpm (in Neutral position)
Ignition timing	A/T models	6 ± 5° BTDC (in P or N position)
	M/T models	6 ± 5° BTDC (in Neutral position)

OK or NG

OK >> GO TO 5.
NG >> Follow the EC-851, "Basic Inspection" .

5. CHECK FUEL INJECTORS

1. Refer to Wiring Diagram for fuel injectors, EC-1210, "Wiring Diagram" .
2. Stop engine and then turn ignition switch ON.
3. Check voltage between ECM terminals 25, 29, 30, 31 and ground with CONSULT-II or tester.

   Voltage: Battery voltage

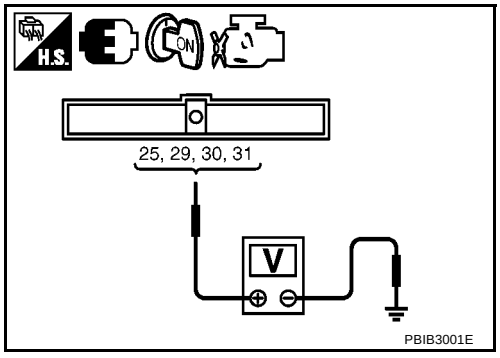

OK or NG

OK >> GO TO 6.
NG >> Perform EC-1211, "Diagnostic Procedure" .

6. CHECK FUNCTION OF IGNITION COIL-I

CAUTION:
Do the following procedure in the place where ventilation is good without the combustible.

1. Turn ignition switch OFF.
2. Remove fuel pump fuse in IPDM E/R to release fuel pressure.

   NOTE:
   Do not use CONSULT-II to release fuel pressure, or fuel pressure applies again during the following procedure.

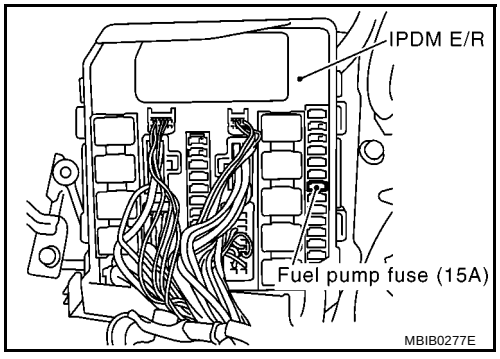

3. Start engine.
4. After engine stalls, crank it two or three times to release all fuel pressure.
5. Turn ignition switch OFF.
6. Remove all ignition coil harness connectors to avoid the electrical discharge from the ignition coils.
7. Remove ignition coil and spark plug of the cylinder to be checked.
8. Crank engine for 5 seconds or more to remove combustion gas in the cylinder.
9. Connect spark plug and harness connector to ignition coil.
10. Fix ignition coil using a rope etc. with gap of 13 - 17 mm between the edge of the spark plug and grounded metal portion as shown in the figure.
11. Crank engine for about three seconds, and check whether spark is generated between the spark plug and the grounded metal portion.

    Spark should be generated.

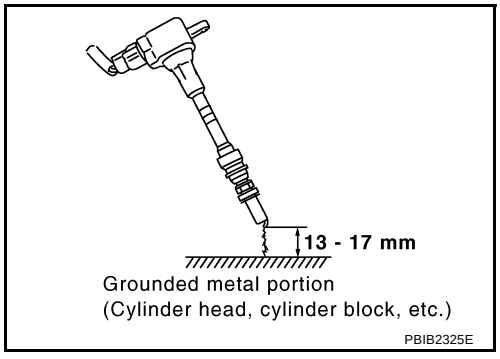

CAUTION:

- **Do not approach to the spark plug and the ignition coil within 50cm. Be careful not to get an electrical shock while checking, because the electrical discharge voltage becomes 20kV or more.**
- **It might cause to damage the ignition coil if the gap of more than 17 mm is taken.**

NOTE:
When the gap is less than 13 mm, the spark might be generated even if the coil is malfunctioning.

OK or NG

OK >> GO TO 10.
NG >> GO TO 7.

7. CHECK FUNCTION OF IGNITION COIL-II

1. Turn ignition switch OFF.
2. Disconnect spark plug and connect a known-good spark plug.
3. Crank engine for about three seconds, and recheck whether spark is generated between the spark plug and the grounded metal portion.

Spark should be generated.

OK or NG

OK >> GO TO 8.
NG >> Check ignition coil, power transistor and their circuits. Refer to EC-1221, "IGNITION SIGNAL" .

8. CHECK SPARK PLUG

Check the initial spark plug for fouling, etc.

OK or NG

OK >> Replace spark plug(s) with standard type one(s). For spark plug type, refer to EM-133, "SPARK PLUG (PLATINUM-TIPPED TYPE)" .
NG >> 1. Repair or clean spark plug.
2. GO TO 9.

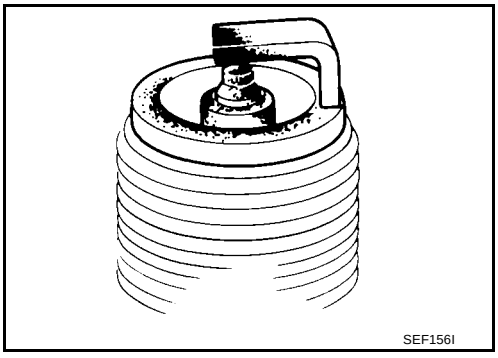

9. CHECK FUNCTION OF IGNITION COIL-III

1. Reconnect the initial spark plugs.
2. Crank engine for about three seconds, and recheck whether spark is generated between the spark plug and the grounded portion.

Spark should be generated.

OK or NG

OK >> **INSPECTION END**
NG >> Replace spark plug(s) with standard type one(s). For spark plug type, refer to EM-133, "SPARK PLUG (PLATINUM-TIPPED TYPE)" .

10. CHECK FUEL INJECTOR

1. Turn ignition switch OFF.
2. Remove fuel injector assembly.
Refer to EM-135, "FUEL INJECTOR AND FUEL TUBE" .
Keep fuel hose and all fuel injectors connected to fuel tube.
3. Disconnect all ignition coil harness connectors.
4. Reconnect all fuel injector harness connectors disconnected.
5. Turn ignition switch ON.
Make sure fuel does not drip from fuel injector.

OK or NG

OK (Does not drip.)>>GO TO 11.
NG (Drips.)>>Replace the fuel injector(s) from which fuel is dripping.

11. CHECK INTERMITTENT INCIDENT

Refer to EC-917, "TROUBLE DIAGNOSIS FOR INTERMITTENT INCIDENT" .

Trouble is fixed.>>**INSPECTION END**
Trouble is not fixed.>>Replace three way catalyst (manifold).

DTC P0444 EVAP CANISTER PURGE VOLUME CONTROL SOLENOID VALVE

PFP:14920

Description

BBS004ED

SYSTEM DESCRIPTION

Sensor	Input Signal to ECM	ECM function	Actuator
Crankshaft position sensor (POS) Camshaft position sensor (PHASE)	Engine speed*1	EVAP canister purge flow control	EVAP canister purge volume control solenoid valve
Mass air flow sensor	Amount of intake air		
Engine coolant temperature sensor	Engine coolant temperature		
Battery	Battery voltage*1		
Throttle position sensor	Throttle position		
Accelerator pedal position sensor	Accelerator pedal position		
Heated oxygen sensor 1	Density of oxygen in exhaust gas (Mixture ratio feedback signal)		
Wheel sensor	Vehicle speed*2		

*1: ECM determines the start signal status by the signals of engine speed and battery voltage.
*2: This signal is sent to the ECM through CAN communication line.

This system controls flow rate of fuel vapor from the EVAP canister. The opening of the vapor by-pass passage in the EVAP canister purge volume control solenoid valve changes to control the flow rate. The EVAP canister purge volume control solenoid valve repeats ON/OFF operation according to the signal sent from the ECM. The opening of the valve varies for optimum engine control. The optimum value stored in the ECM is determined by considering various engine conditions. When the engine is operating, the flow rate of fuel vapor from the EVAP canister is regulated as the air flow changes.

COMPONENT DESCRIPTION

The EVAP canister purge volume control solenoid valve uses a ON/OFF duty to control the flow rate of fuel vapor from the EVAP canister. The EVAP canister purge volume control solenoid valve is moved by ON/OFF pulses from the ECM. The longer the ON pulse, the greater the amount of fuel vapor that will flow through the valve.

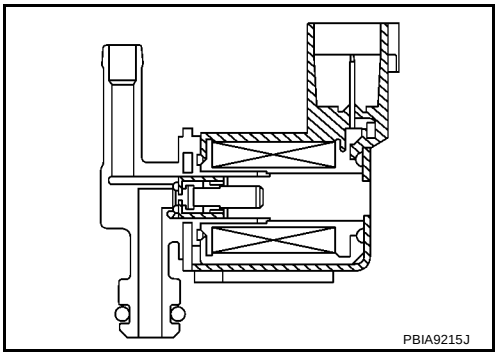

CONSULT-II Reference Value in Data Monitor Mode

BBS004EE

Specification data are reference values.

MONITOR ITEM	CONDITION		SPECIFICATION
PURG VOL C/V	● Engine: After warming up ● Shift lever: P or N (A/T), Neutral (M/T) ● Air conditioner switch: OFF ● No load	Idle	0%
		2,000 rpm	0 - 50%

On Board Diagnosis Logic

BBS004EF

DTC No.	Trouble diagnosis name	DTC detecting condition	Possible cause
P0444 0444	EVAP canister purge volume control solenoid valve circuit open	An excessively low voltage signal is sent to ECM through the valve	● Harness or connectors (The solenoid valve circuit is open or shorted.) ● EVAP canister purge volume control solenoid valve

DTC Confirmation Procedure

BBS004EG

NOTE:
If DTC Confirmation Procedure has been previously conducted, always turn ignition switch OFF and wait at least 10 seconds before conducting the next test.
TESTING CONDITION:
Before performing the following procedure, confirm battery voltage is more than 11V at idle.

WITH CONSULT-II

1. Turn ignition switch ON.
2. Select “DATA MONITOR” mode with CONSULT-II.
3. Start engine and let it idle for at least 13 seconds.
4. If 1st trip DTC is detected, go to EC-1067, "Diagnostic Procedure" .

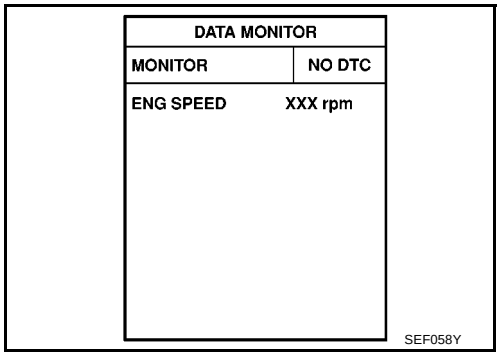

WITH GST

Follow the procedure “WITH CONSULT-II” above.

Wiring Diagram

BBS004EH

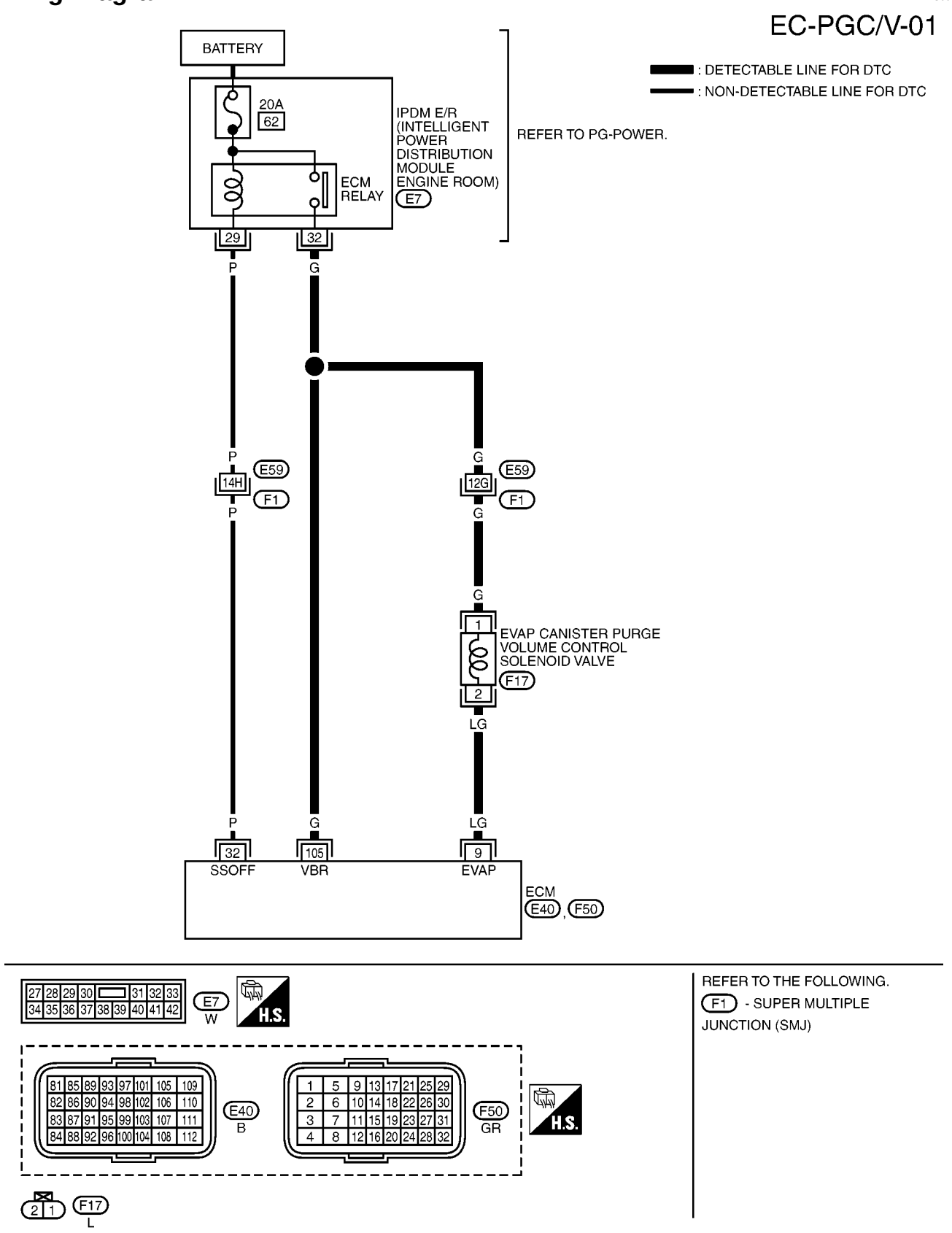

Specification data are reference values and are measured between each terminal and ground.
Pulse signal is measured by CONSULT-II.

CAUTION:

Do not use ECM ground terminals when measuring input/output voltage. Doing so may result in damage to the ECM's transistor. Use a ground other than ECM terminals, such as the ground.

TERMINAL NO.	WIRE COLOR	ITEM	CONDITION	DATA (DC Voltage)
9	LG	EVAP canister purge volume control solenoid valve	**[Engine is running]** ● Idle speed	BATTERY VOLTAGE (11 - 14V)★ 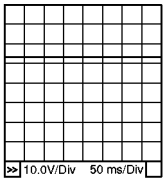 PBIB0050E
			[Engine is running] ● Engine speed: About 2,000 rpm (More than 100 seconds after starting engine)	Approximately 10V★ 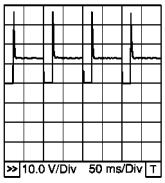 PBIB0520E
32	P	ECM relay (Self shut-off)	**[Engine is running]** **[Ignition switch: OFF]** ● For a few seconds after turning ignition switch OFF	0 - 1.0V
			[Ignition switch: OFF] ● More than a few seconds after turning ignition switch OFF	BATTERY VOLTAGE (11 - 14V)
105	G	Power supply for ECM	**[Ignition switch: ON]**	BATTERY VOLTAGE (11 - 14V)

★: Average voltage for pulse signal (Actual pulse signal can be confirmed by oscilloscope.)

Diagnostic Procedure

BBS004EI

1. CHECK EVAP CANISTER PURGE VOLUME CONTROL SOLENOID VALVE POWER SUPPLY CIRCUIT

1. Turn ignition switch OFF.
2. Disconnect EVAP canister purge volume control solenoid valve (1) harness connector.

– ⇦: Vehicle front

3. Turn ignition switch ON.

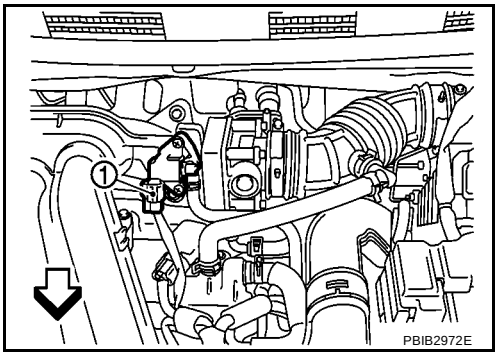

4. Check voltage between EVAP canister purge volume control solenoid valve terminal 1 and ground with CONSULT-II or tester.

Voltage: Battery voltage

OK or NG

OK >> GO TO 3.
NG >> GO TO 2.

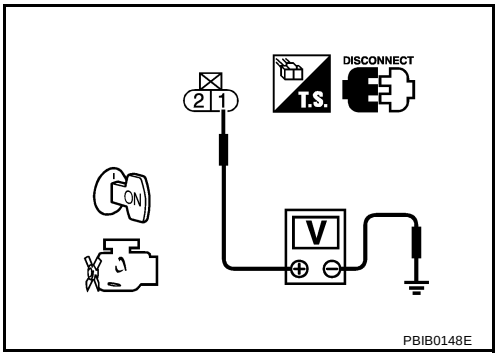

2. DETECT MALFUNCTIONING PART

Check the following.

- Harness connectors E59, F1
- Harness for open or short between EVAP canister purge volume control solenoid valve and IPDM E/R
- Harness for open or short between EVAP canister purge volume control solenoid valve and ECM

>> Repair open circuit or short to ground or short to power in harness or connectors.

3. CHECK EVAP CANISTER PURGE VOLUME CONTROL SOLENOID VALVE OUTPUT SIGNAL CIRCUIT FOR OPEN AND SHORT

1. Turn ignition switch OFF.
2. Disconnect ECM harness connector.
3. Check harness continuity between ECM terminal 9 and EVAP canister purge volume control solenoid valve terminal 2. Refer to Wiring Diagram.

Continuity should exist.

4. Also check harness for short to ground and short to power.

OK or NG

OK (With CONSULT-II)>>GO TO 4.
OK (Without CONSULT-II)>>GO TO 5.
NG >> Repair open circuit or short to ground or short to power in harness or connectors.

4. CHECK EVAP CANISTER PURGE VOLUME CONTROL SOLENOID VALVE OPERATION

With CONSULT-II

1. Reconnect all harness connectors disconnected.
2. Start engine.
3. Perform “PURG VOL CONT/V” in “ACTIVE TEST” mode with CONSULT-II. Check that engine speed varies according to the valve opening.

ACTIVE TEST	
PURG VOL CONT/V	XXX %
MONITOR	
ENG SPEED	XXX rpm
A/F ALPHA-B1	XXX %
HO2S1 MNTR (B1)	LEAN

PBIB0569E

OK or NG

OK >> GO TO 6.
NG >> GO TO 5.

5. CHECK EVAP CANISTER PURGE VOLUME CONTROL SOLENOID VALVE

Refer to EC-1068, "Component Inspection" .

OK or NG

OK >> GO TO 6.
NG >> Replace EVAP canister purge volume control solenoid valve.

6. CHECK INTERMITTENT INCIDENT

Refer to EC-917, "TROUBLE DIAGNOSIS FOR INTERMITTENT INCIDENT" .

>> **INSPECTION END**

Component Inspection

BBS004EJ

EVAP CANISTER PURGE VOLUME CONTROL SOLENOID VALVE

With CONSULT-II

Check air passage continuity of EVAP canister purge volume control solenoid valve under the following conditions.

Condition (PURG VOL CONT/V value)	Air passage continuity between A and B
100%	Yes
0%	No

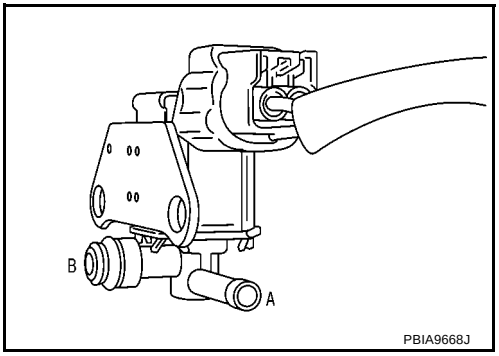

PBIA9668J

Without CONSULT-II

Check air passage continuity of EVAP canister purge volume control solenoid valve under the following conditions.

Condition	Air passage continuity between A and B
12V direct current supply between terminals 1 and 2	Yes
No supply	No

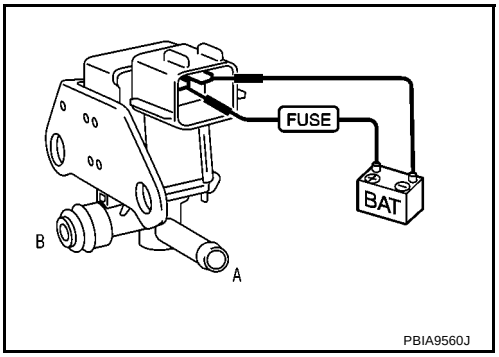

PBIA9560J

Removal and Installation

BBS004EK

EVAP CANISTER PURGE VOLUME CONTROL SOLENOID VALVE

Refer to EM-120, "INTAKE MANIFOLD" .

DTC P0500 VSS

PFP:32702

Description

BBS004EL

NOTE:

- **If DTC P0500 is displayed with DTC U1000 or U1001, first perform the trouble diagnosis for DTC U1000, U1001. Refer to EC-925, "DTC U1000, U1001 CAN COMMUNICATION LINE" .**
- **If DTC P0500 is displayed with DTC U1010, first perform the trouble diagnosis for DTC U1010. Refer to EC-928, "DTC U1010 CAN COMMUNICATION" .**

The vehicle speed signal is sent to the combination meter from “ABS actuator and electric unit (control unit)” through CAN communication line. The combination meter then sends a signal to the ECM through CAN communication line.

On Board Diagnosis Logic

BBS004EM

DTC No.	Trouble diagnosis name	DTC detecting condition	Possible cause
P0500 0500	Vehicle speed sensor	The almost 0 km/h (0 MPH) signal from vehicle speed sensor is sent to ECM even when vehicle is being driven.	● Harness or connectors (The CAN communication line is open or shorted.) ● Harness or connectors (Wheel sensor circuit is open or shorted) ● ABS actuator and electric unit (control unit) ● Wheel sensor ● Combination meter

DTC Confirmation Procedure

BBS004EN

CAUTION:

Always drive vehicle at a safe speed.

NOTE:

If DTC Confirmation Procedure has been previously conducted, always turn ignition switch OFF and wait at least 10 seconds before conducting the next test.

TESTING CONDITION:

Steps 1 and 2 may be conducted with the drive wheels lifted in the shop or by driving the vehicle. If a road test is expected to be easier, it is unnecessary to lift the vehicle.

WITH CONSULT-II

1. Start engine.
2. Read “VHCL SPEED SE” in “DATA MONITOR” mode with CONSULT-II. The vehicle speed on CONSULT-II should exceed 10 km/h (6 MPH) when rotating wheels with suitable gear position.
   If NG, go to EC-1071, "Diagnostic Procedure" .
   If OK, go to following step.
3. Select “DATA MONITOR” mode with CONSULT-II.
4. Warm engine up to normal operating temperature.
5. Maintain the following conditions for at least 60 consecutive seconds.

ENG SPEED	A/T: More than 1,900 rpm M/T: More than 2,500 rpm
COOLAN TEMP/S	More than 70°C (158°F)
B/FUEL SCHDL	A/T: 4.8 - 31.8 msec M/T: 3.8 - 31.8 msec
Shift lever	Suitable position
PW/ST SIGNAL	OFF

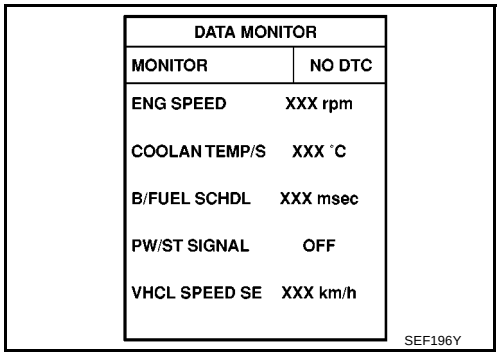

6. If 1st trip DTC is detected, go to EC-1071, "Diagnostic Procedure" .

Overall Function Check

BBS004EO

Use this procedure to check the overall function of the vehicle speed signal circuit. During this check, a 1st trip DTC might not be confirmed.

WITH GST

1. Lift up drive wheels.
2. Start engine.
3. Read vehicle speed signal in Service $01 with GST.
   The vehicle speed signal on GST should be able to exceed 10 km/h (6 MPH) when rotating wheels with suitable gear position.
4. If NG, go to EC-1071, "Diagnostic Procedure" .

Diagnostic Procedure

BBS004EP

1. CHECK DTC WITH “ABS ACTUATOR AND ELECTRIC UNIT (CONTROL UNIT)”

Refer to BRC-49, "TROUBLE DIAGNOSIS" (models with ESP) or BRC-8, "TROUBLE DIAGNOSIS" (models without ESP).

OK or NG

OK >> GO TO 2.
NG >> Repair or replace.

2. CHECK COMBINATION METER

Check combination meter function.
Refer to DI-4, "COMBINATION METERS" .

>> **INSPECTION END**

DTC P0605 ECM

PFP:23710

Component Description

BBS004EQ

The ECM consists of a microcomputer and connectors for signal input and output and for power supply. The ECM controls the engine.

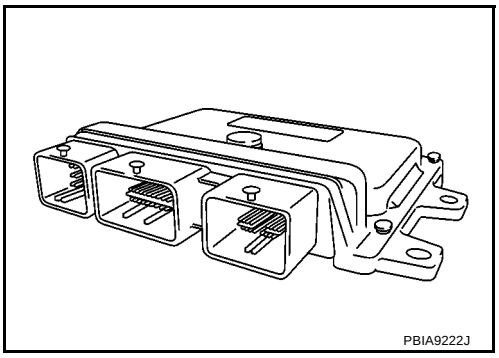

On Board Diagnosis Logic

BBS004ER

This self-diagnosis has one or two trip detection logic.

DTC No.	Trouble diagnosis name	DTC detecting condition		Possible cause
P0605 0605	Engine control module	A)	ECM calculation function is malfunctioning.	● ECM
		B)	ECM EEP-ROM system is malfunctioning.	
		C)	ECM self shut-off function is malfunctioning.	

FAIL-SAFE MODE

ECM enters fail-safe mode when malfunction A is detected.

Detected items	Engine operation condition in fail-safe mode
Malfunction A	ECM stops the electric throttle control actuator control, throttle valve is maintained at a fixed opening (approx. 5 degrees) by the return spring.

DTC Confirmation Procedure

BBS004ES

Perform PROCEDURE FOR MALFUNCTION A first. If the 1st trip DTC cannot be confirmed, perform PROCEDURE FOR MALFUNCTION B. If there is no malfunction on PROCEDURE FOR MALFUNCTION B, perform PROCEDURE FOR MALFUNCTION C.

NOTE:
If DTC Confirmation Procedure has been previously conducted, always turn ignition switch OFF and wait at least 10 seconds before conducting the next test.

PROCEDURE FOR MALFUNCTION A

With CONSULT-II

1. Turn ignition switch ON.
2. Select “DATA MONITOR” mode with CONSULT-II.
3. If 1st trip DTC is detected, go to EC-1073, "Diagnostic Procedure" .

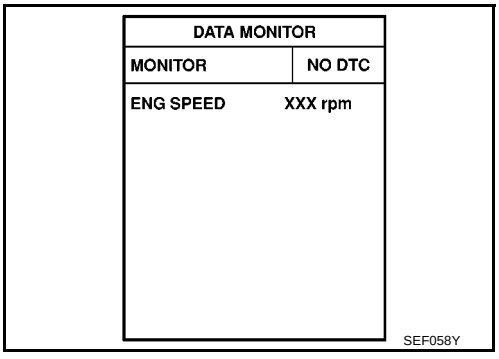

With GST

Follow the procedure “With CONSULT-II” above.

PROCEDURE FOR MALFUNCTION B

With CONSULT-II

1. Turn ignition switch ON and wait at least 1 second.
2. Select “DATA MONITOR” mode with CONSULT-II.
3. Turn ignition switch OFF, wait at least 10 seconds and then turn ON.
4. If 1st trip DTC is detected, go to EC-1073, "Diagnostic Procedure" .

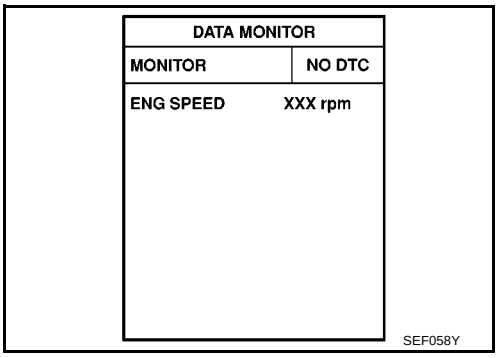

With GST

Follow the procedure “With CONSULT-II” above.

PROCEDURE FOR MALFUNCTION C

With CONSULT-II

1. Turn ignition switch ON and wait at least 1 second.
2. Select “DATA MONITOR” mode with CONSULT-II.
3. Turn ignition switch OFF, wait at least 10 seconds and then turn ON.
4. Repeat step 3 for 32 times.
5. If 1st trip DTC is detected, go to EC-1073, "Diagnostic Procedure" .

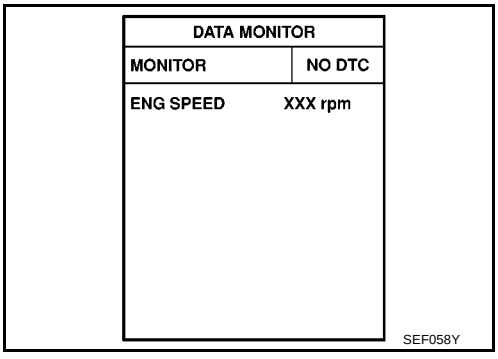

With GST

Follow the procedure “With CONSULT-II” above.

Diagnostic Procedure

BBS004ET

1. INSPECTION START

With CONSULT-II

1. Turn ignition switch ON.
2. Select “SELF DIAG RESULTS” mode with CONSULT-II.
3. Touch “ERASE”.
4. **Perform DTC Confirmation Procedure.**
   See EC-1072, "DTC Confirmation Procedure" .
5. Is the 1st trip DTC P0605 displayed again?

With GST

1. Turn ignition switch ON.
2. Select Service $04 with GST.
3. **Perform DTC Confirmation Procedure.**
   See EC-1072, "DTC Confirmation Procedure" .
4. Is the 1st trip DTC P0605 displayed again?

Yes or No

Yes >> GO TO 2.
No >> **INSPECTION END**

2. REPLACE ECM

1. Replace ECM.
2. Perform initialization of NATS system and registration of all NATS ignition key IDs. Refer to BL-218, "ECM Re-communicating Function" .
3. Perform EC-857, "Accelerator Pedal Released Position Learning" .
4. Perform EC-857, "Throttle Valve Closed Position Learning" .
5. Perform EC-858, "Idle Air Volume Learning" .

>> **INSPECTION END**

DTC P1065 ECM

PFP:23710

Component Description

BBS004EU

ECM has the memory function of the DTC memory, the air-fuel ratio feedback compensation value memory, the Idle Air Volume Learning value memory, etc. even when the ignition switch is turned OFF.

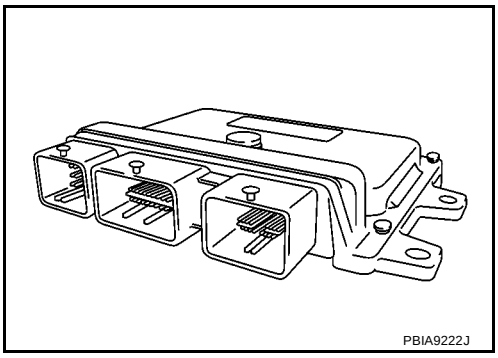

On Board Diagnosis Logic

BBS004EV

DTC No.	Trouble diagnosis name	DTC detecting condition	Possible cause
P1065* 1065	Engine control module	ECM back-up RAM system does not function properly.	● ECM

*: This self-diagnosis is not for ECM power supply circuit, even though “ECM BACK UP/CIRCUIT” is displayed on CONSULT-II screen.

DTC Confirmation Procedure

BBS004EW

NOTE:
If DTC Confirmation Procedure has been previously conducted, always turn ignition switch OFF and wait at least 10 seconds before conducting the next test.

WITH CONSULT-II

1. Turn ignition switch ON and wait at least 1 second.
2. Select “DATA MONITOR” mode with CONSULT-II.
3. Start engine and let it idle for 1 second.
4. Turn ignition switch OFF, wait at least 10 seconds and then turn ON.
5. Repeat steps 3 and 4 for 4 times.
6. If 1st trip DTC is detected, go to EC-1076, "Diagnostic Procedure" .

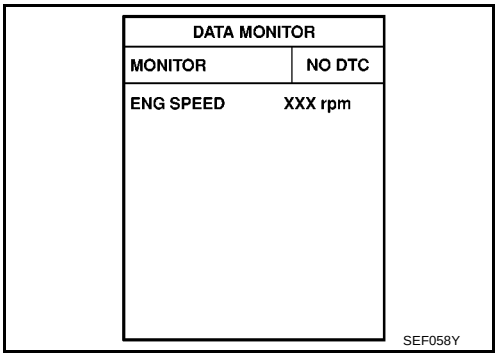

WITH GST

Follow the procedure “WITH CONSULT-II” above.

Diagnostic Procedure

BBS004EX

1. INSPECTION START

With CONSULT-II

1. Turn ignition switch ON.
2. Select “SELF-DIAG RESULTS” mode with CONSULT-II.
3. Touch “ERASE”.
4. **Perform DTC Confirmation Procedure.**
   See EC-1075, "DTC Confirmation Procedure" .
5. Is the 1st trip DTC P1065 displayed again?

With GST

1. Turn ignition switch ON.
2. Select Service $04 with GST.
3. **Perform DTC Confirmation Procedure.**
   See EC-1075, "DTC Confirmation Procedure" .
4. Is the 1st trip DTC P1065 displayed again?

Yes or No

Yes >> GO TO 2.
No >> **INSPECTION END**

2. REPLACE ECM

1. Replace ECM.
2. Perform initialization of NATS system and registration of all NATS ignition key IDs. Refer to BL-218, "ECM Re-communicating Function" .
3. Perform EC-857, "Accelerator Pedal Released Position Learning" .
4. Perform EC-857, "Throttle Valve Closed Position Learning" .
5. Perform EC-858, "Idle Air Volume Learning" .

>> **INSPECTION END**

DTC P1111 IVT CONTROL SOLENOID VALVE

PFP:23796

Component Description

BBS004EY

Intake valve timing control solenoid valve is activated by ON/OFF pulse duty (ratio) signals from the ECM.
The intake valve timing control solenoid valve changes the oil amount and direction of flow through intake valve timing control unit or stops oil flow.
The longer pulse width advances valve angle.
The shorter pulse width retards valve angle.
When ON and OFF pulse widths become equal, the solenoid valve stops oil pressure flow to fix the intake valve angle at the control position.

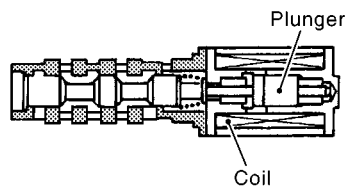

PBIB1842E

CONSULT-II Reference Value in Data Monitor Mode

BBS004EZ

Specification data are reference values.

MONITOR ITEM	CONDITION		SPECIFICATION
INT/V SOL (B1)	● Engine: After warming up ● Air conditioner switch: OFF ● Shift lever: P or N (A/T), Neutral (M/T) ● No load	Idle	0% - 2%
		2,500 rpm	Approx. 0% - 90%

On Board Diagnosis Logic

BBS004F0

DTC No.	Trouble diagnosis name	DTC detecting condition	Possible cause
P1111 1111	Intake valve timing control solenoid valve circuit	An improper voltage is sent to the ECM through intake valve timing control solenoid valve.	● Harness or connectors (Solenoid valve circuit is open or shorted.) ● Intake valve timing control solenoid valve

DTC Confirmation Procedure

BBS004F1

NOTE:
If DTC Confirmation Procedure has been previously conducted, always turn ignition switch OFF and wait at least 10 seconds before conducting the next test.

WITH CONSULT-II

1. Turn ignition switch ON.
2. Select “DATA MONITOR” mode with CONSULT-II.
3. Start engine and let it idle for 5 seconds.
4. If 1st trip DTC is detected, go to EC-1080, "Diagnostic Procedure" .

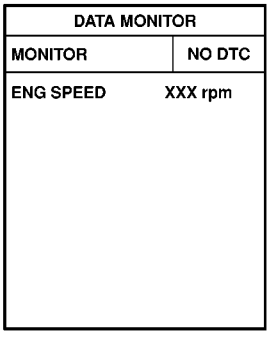

SEF058Y

WITH GST

Following the procedure “WITH CONSULT-II” above.

Wiring Diagram

BBS004F2

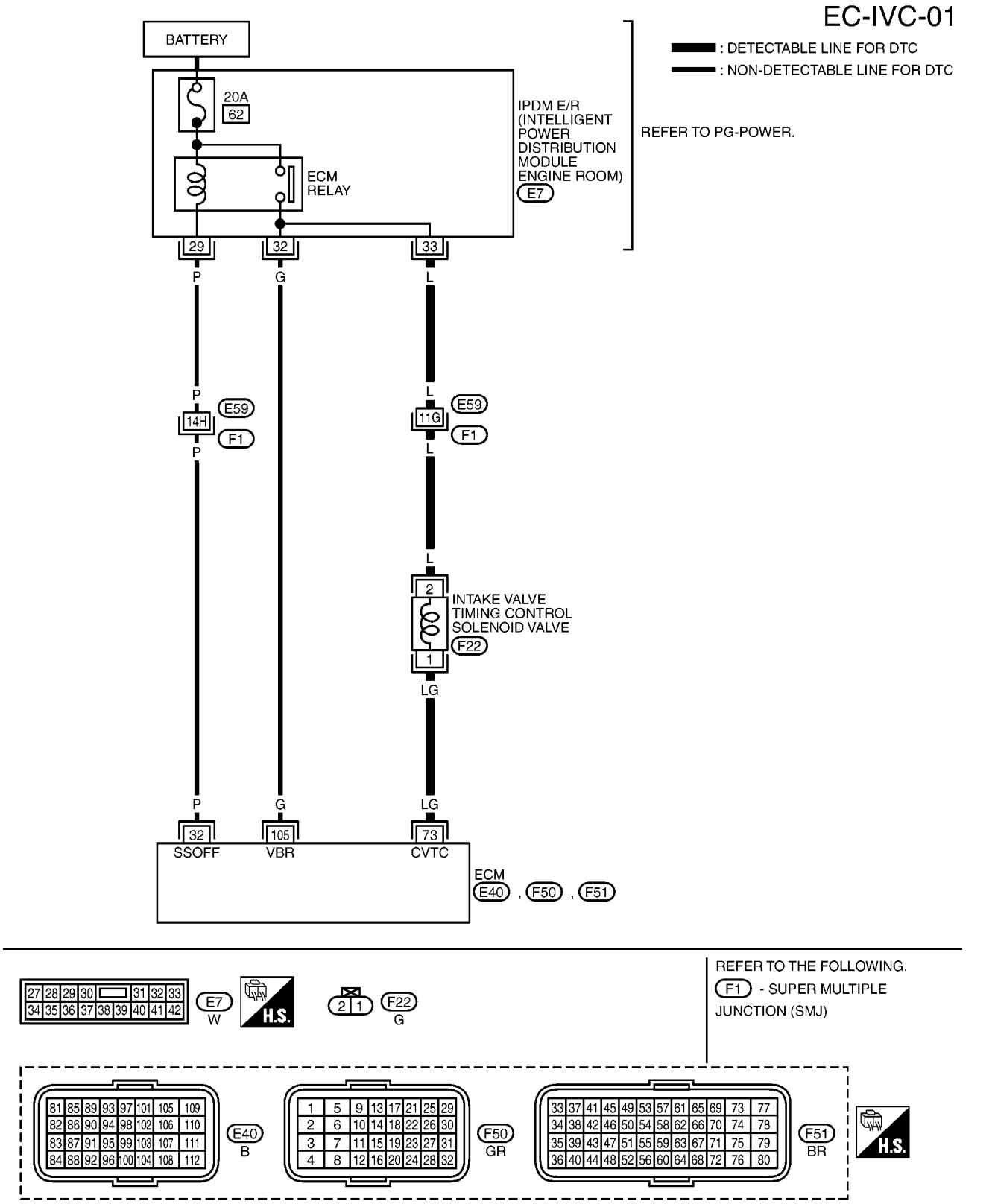

Specification data are reference values and are measured between each terminal and ground.
Pulse signal is measured by CONSULT-II.

CAUTION:
Do not use ECM ground terminals when measuring input/output voltage. Doing so may result in damage to the ECM's transistor. Use a ground other than ECM terminals, such as the ground.

TERMINAL NO.	WIRE COLOR	ITEM	CONDITION	DATA (DC Voltage)
32	P	ECM relay (Self shut-off)	**[Engine is running]** **[Ignition switch: OFF]** ● For a few seconds after turning ignition switch OFF	0 - 1.0V
			[Ignition switch: OFF] ● More than a few seconds after turning ignition switch OFF	BATTERY VOLTAGE (11 - 14V)
73	LG	Intake valve timing control solenoid valve	**[Engine is running]** ● **Warm-up condition** ● Idle speed	BATTERY VOLTAGE (11 - 14V)
			[Engine is running] ● **Warm-up condition** ● Engine speed: 2,000 rpm	7 - 10V★ 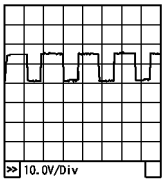 PBIA4937J
105	G	Power supply for ECM	**[Ignition switch: ON]**	BATTERY VOLTAGE (11 - 14V)

★: Average voltage for pulse signal (Actual pulse signal can be confirmed by oscilloscope.)

Diagnostic Procedure

BBS004F3

1. CHECK INTAKE VALVE TIMING CONTROL SOLENOID VALVE POWER SUPPLY CIRCUIT

1. Turn ignition switch OFF.
2. Disconnect intake valve timing control solenoid valve (1) harness connector.
3. Turn ignition switch ON.

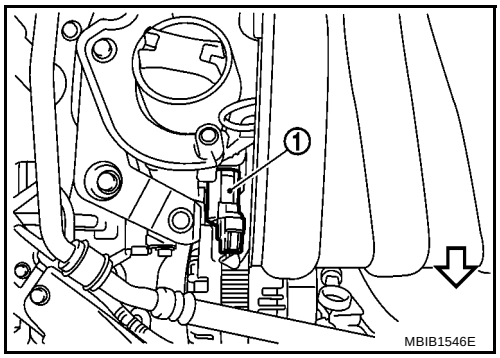

4. Check voltage between intake valve timing control solenoid valve terminal 2 and ground with CONSULT-II or tester.

Voltage: Battery voltage

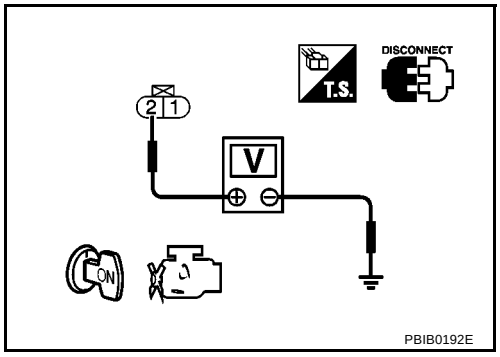

OK or NG

OK >> GO TO 3.
NG >> GO TO 2.

2. DETECT MALFUNCTION PART

Check the following.

- Harness connectors E59, F1
- Harness for open or short between intake valve timing control solenoid valve and IPDM E/R

>> Repair or replace harness or connectors.

3. CHECK INTAKE VALVE TIMING CONTROL SOLENOID VALVE OUTPUT SIGNAL CIRCUIT FOR OPEN AND SHORT

1. Turn ignition switch OFF.
2. Disconnect ECM harness connector.
3. Check harness continuity between ECM terminal 73 and intake valve timing control solenoid valve terminal 1. Refer to Wiring Diagram.

Continuity should exist.

4. Also check harness for short to ground and short to power.

OK or NG

OK >> GO TO 4.
NG >> Repair open circuit or short to ground or short to power in harness or connectors.

4. CHECK INTAKE VALVE TIMING CONTROL SOLENOID VALVE

Refer to EC-1081, "Component Inspection" .

OK or NG

OK >> GO TO 5.
NG >> Replace intake valve timing control solenoid valve.

5. CHECK INTERMITTENT INCIDENT

Refer to EC-917, "TROUBLE DIAGNOSIS FOR INTERMITTENT INCIDENT" .

>> **INSPECTION END**

Component Inspection

BBS004F4

INTAKE VALVE TIMING CONTROL SOLENOID VALVE

1. Disconnect intake valve timing control solenoid valve harness connector.
2. Check resistance between intake valve timing control solenoid valve as follows.

Terminal	Resistance
1 and 2	6.7 - 7.7Ω [at 20°C (68°F)]
1 or 2 and ground	∞Ω (Continuity should not exist.)

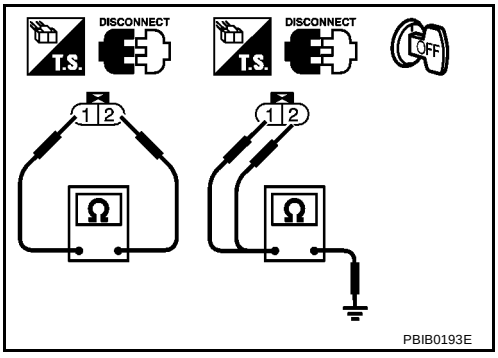

If NG, replace intake valve timing control solenoid valve.
If OK, go to next step.

3. Remove intake valve timing control solenoid valve.
4. Provide 12V DC between intake valve timing control solenoid valve terminals and then interrupt it. Make sure that the plunger moves as shown in the figure.

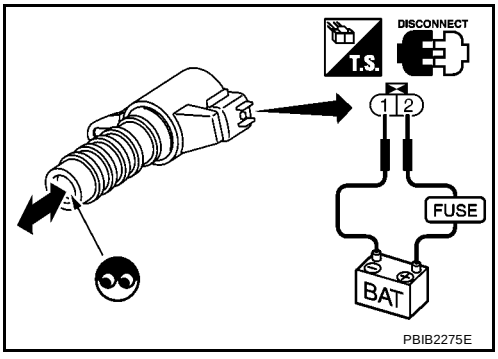

CAUTION:
Do not apply 12V DC continuously for 5 seconds or more. Doing so may result in damage to the coil in intake valve timing control solenoid valve.
If NG, replace intake valve timing control solenoid valve.

NOTE:
Always replace O-ring when intake valve timing control solenoid valve is removed.

Removal and Installation

BBS004F5

INTAKE VALVE TIMING CONTROL SOLENOID VALVE

Refer to EM-142, "TIMING CHAIN" .

DTC P1121 ELECTRIC THROTTLE CONTROL ACTUATOR

PFP:16119

Component Description

BBS004F6

Electric throttle control actuator consists of throttle control motor, throttle position sensor, etc.
The throttle control motor is operated by the ECM and it opens and closes the throttle valve.
The throttle position sensor detects the throttle valve position, and the opening and closing speed of the throttle valve and feeds the voltage signals to the ECM. The ECM judges the current opening angle of the throttle valve from these signals and the ECM controls the throttle control motor to make the throttle valve opening angle properly in response to driving condition.

On Board Diagnosis Logic

BBS004F7

This self-diagnosis has the one trip detection logic.

DTC No.	Trouble diagnosis name	DTC detecting condition		Possible cause
P1121 1121	Electric throttle control actuator	A)	Electric throttle control actuator does not function properly due to the return spring malfunction.	● Electric throttle control actuator
		B)	Throttle valve opening angle in fail-safe mode is not in specified range.	
		C)	ECM detect the throttle valve is stuck open.	

FAIL-SAFE MODE

When the malfunction is detected, the ECM enters fail-safe mode and the MI lights up.

Detected items	Engine operating condition in fail-safe mode
Malfunction A	The ECM controls the electric throttle actuator by regulating the throttle opening around the idle position. The engine speed will not rise more than 2,000 rpm.
Malfunction B	ECM controls the electric throttle control actuator by regulating the throttle opening to 20 degrees or less.
Malfunction C	While the vehicle is driving, it slows down gradually by fuel cut. After the vehicle stops, the engine stalls. The engine can restart in N or P position (A/T), Neutral position (M/T), and engine speed will not exceed 1,000 rpm or more.

DTC Confirmation Procedure

BBS004F8

NOTE:

- **Perform PROCEDURE FOR MALFUNCTION A AND B first. If the DTC cannot be confirmed, perform PROCEDURE FOR MALFUNCTION C.**
- If DTC Confirmation Procedure has been previously conducted, always turn ignition switch OFF and wait at least 10 seconds before conducting the next test.

PROCEDURE FOR MALFUNCTION A AND B

With CONSULT-II

1. Turn ignition witch ON and wait at least 1 second.
2. Select “DATA MONITOR” mode with CONSULT-II.
3. Set shift lever to D position (A/T), 1st position (M/T) and wait at least 3 seconds.
4. Set shift lever to P position (A/T), Neutral position (M/T).
5. Turn ignition switch OFF and wait at least 10 seconds.
6. Turn ignition switch ON and wait at least 1 second.
7. Set shift lever to D position (A/T), 1st position (M/T) and wait at least 3 seconds.
8. Set shift lever to P position (A/T), Neutral position (M/T).
9. Turn ignition switch OFF, wait at least 10 seconds and then turn ON.
10. If DTC is detected, go to EC-1083, "Diagnostic Procedure" .

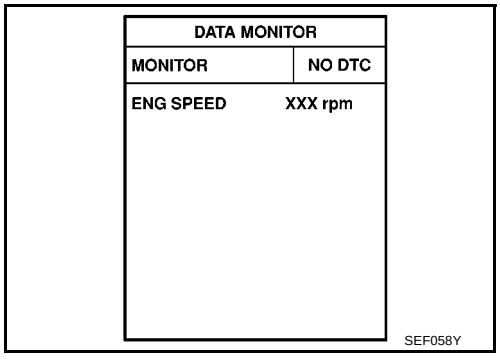

With GST

Follow the procedure “With CONSULT-II” above.

PROCEDURE FOR MALFUNCTION C

With CONSULT-II

1. Turn ignition switch ON and wait at least 1 second.
2. Select “DATA MONITOR” mode with CONSULT-II.
3. Set shift lever to D position (A/T), 1st position (M/T) and wait at least 3 seconds.
4. Set shift lever to P position (A/T), Neutral position (M/T).
5. Start engine and let it idle for 3 seconds.
6. If DTC is detected, go to EC-1083, "Diagnostic Procedure" .

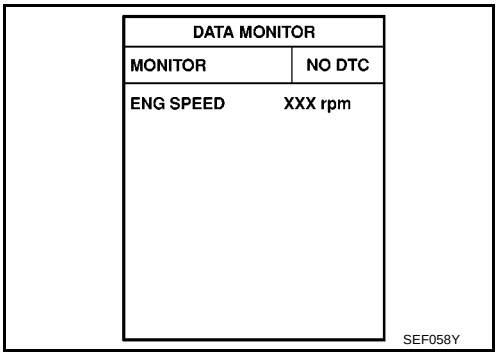

With GST

Follow the procedure “With CONSULT-II” above.

Diagnostic Procedure

BBS004F9

1. CHECK ELECTRIC THROTTLE CONTROL ACTUATOR VISUALLY

1. Remove the intake air duct.
2. Check if a foreign matter is caught between the throttle valve (1) and the housing.

– ⇦: Vehicle front

OK or NG

OK >> GO TO 2.
NG >> Remove the foreign matter and clean the electric throttle control actuator inside.

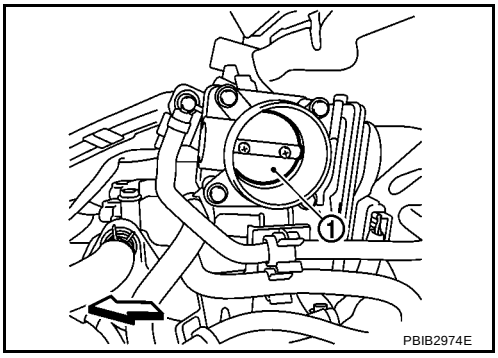

2. REPLACE ELECTRIC THROTTLE CONTROL ACTUATOR

1. Replace the electric throttle control actuator.
2. Perform EC-857, "Throttle Valve Closed Position Learning" .
3. Perform EC-858, "Idle Air Volume Learning" .

>> **INSPECTION END**

Removal and Installation

BBS004FA

Refer to EM-120, "INTAKE MANIFOLD" .

DTC P1122 ELECTRIC THROTTLE CONTROL FUNCTION

PFP:16119

Description

BBS004FB

NOTE:
If DTC P1122 is displayed with DTC P1121 or P1126, first perform the trouble diagnosis for DTC P1121 or P1126. Refer to EC-1082, "DTC P1121 ELECTRIC THROTTLE CONTROL ACTUATOR" or EC-1090, "DTC P1124, P1126 THROTTLE CONTROL MOTOR RELAY" .

Electric throttle control actuator consists of throttle control motor, throttle position sensor, etc.
The throttle control motor is operated by the ECM and it opens and closes the throttle valve.
The current opening angle of the throttle valve is detected by the throttle position sensor and it provides feedback to the ECM to control the throttle control motor to make the throttle valve opening angle properly in response to driving condition.

On Board Diagnosis Logic

BBS004FC

This self-diagnosis has the one trip detection logic.

DTC No.	Trouble diagnosis name	DTC detecting condition	Possible cause
P1122 1122	Electric throttle control performance	Electric throttle control function does not operate properly.	● Harness or connectors (Throttle control motor circuit is open or shorted) ● Electric throttle control actuator

FAIL-SAFE MODE

When the malfunction is detected, ECM enters fail-safe mode and the MI lights up.

Engine operating condition in fail-safe mode
ECM stops the electric throttle control actuator control, throttle valve is maintained at a fixed opening (approx. 5 degrees) by the return spring.

DTC Confirmation Procedure

BBS004FD

NOTE:
If DTC Confirmation Procedure has been previously conducted, always turn ignition switch OFF and wait at least 10 seconds before conducting the next test.

TESTING CONDITION:
Before performing the following procedure, confirm that battery voltage is more than 11V when engine is running.

WITH CONSULT-II

1. Turn ignition switch ON and wait at least 2 seconds.
2. Select “DATA MONITOR” mode with CONSULT-II.
3. Start engine and let it idle for 5 seconds.
4. If DTC is detected, go to EC-1086, "Diagnostic Procedure" .

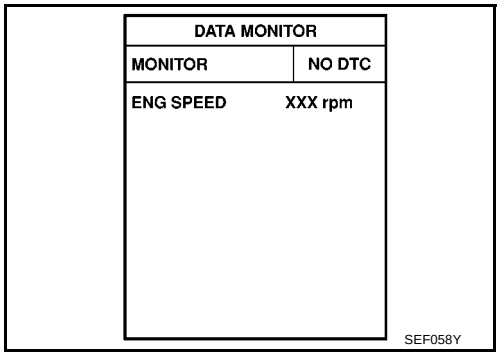

WITH GST

Follow the procedure “WITH CONSULT-II” above.

Wiring Diagram

BBS004FE

EC-ETC1-01

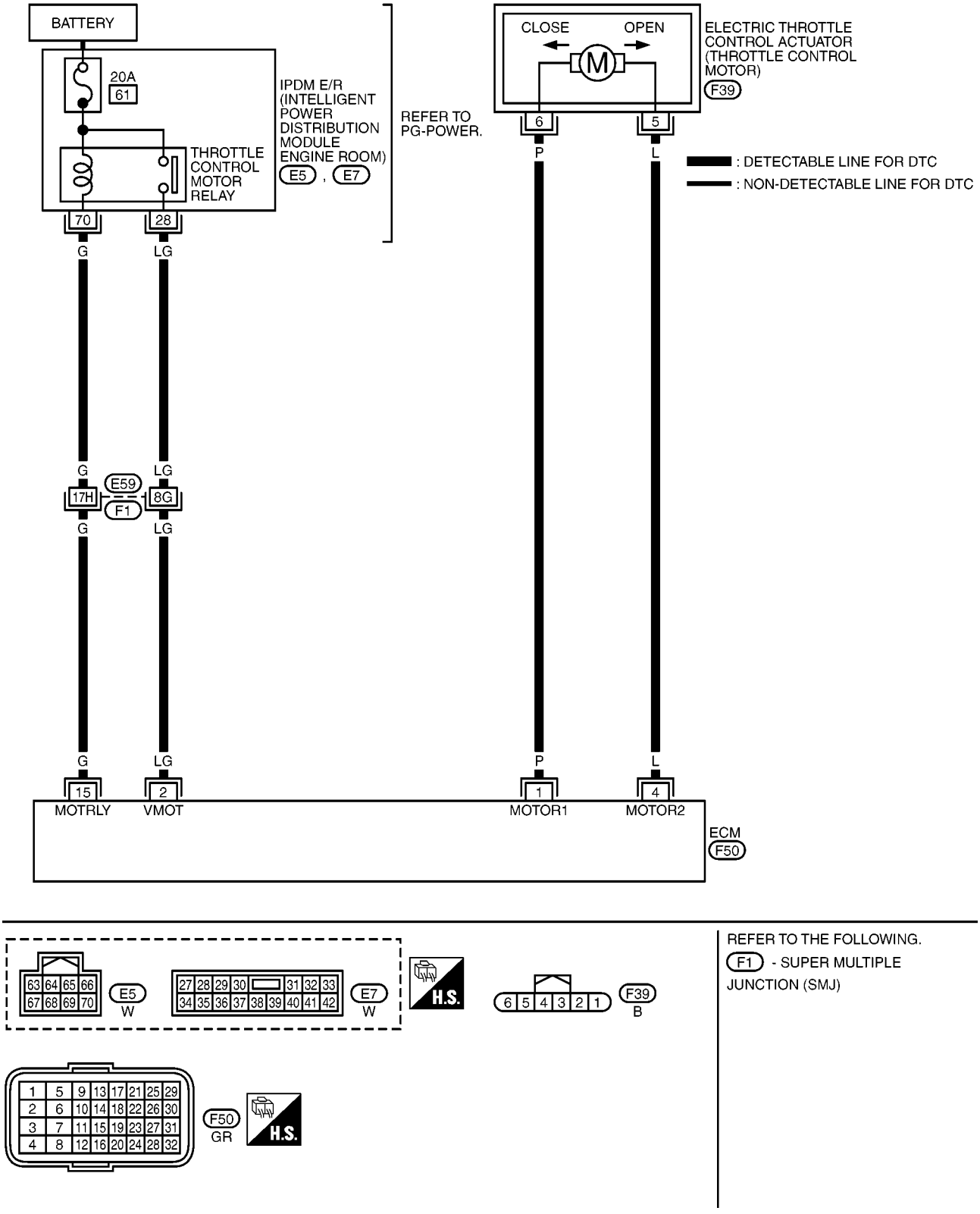

MBWA1472E

Specification data are reference values and are measured between each terminal and ground.
Pulse signal is measured by CONSULT-II.

CAUTION:

Do not use ECM ground terminals when measuring input/output voltage. Doing so may result in damage to the ECM's transistor. Use a ground other than ECM terminals, such as the ground.

TERMINAL NO.	WIRE COLOR	ITEM	CONDITION	DATA (DC Voltage)
1	P	Throttle control motor (Open)	**[Ignition switch: ON]** ● Engine stopped ● Shift lever: D (A/T), 1st (M/T) ● Accelerator pedal: Fully depressed	0 - 14V★ 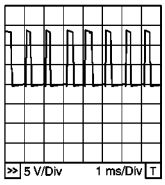 PBIB1105E
2	LG	Throttle control motor relay power supply	**[Ignition switch: ON]**	BATTERY VOLTAGE (11 - 14V)
4	L	Throttle control motor (Close)	**[Ignition switch: ON]** ● Engine stopped ● Shift lever: D (A/T), 1st (M/T) ● Accelerator pedal: Released	0 - 14V★ 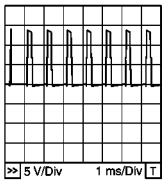 PBIB1104E
15	G	Throttle control motor relay	**[Ignition switch: OFF]**	BATTERY VOLTAGE (11 - 14V)
			[Ignition switch: ON]	0 - 1.0V

★: Average voltage for pulse signal (Actual pulse signal can be confirmed by oscilloscope.)

Diagnostic Procedure

BBS004FF

1. CHECK GROUND CONNECTIONS

1. Turn ignition switch OFF.
2. Loosen and retighten ground screws on the body.
   Refer to EC-924, "Ground Inspection" .

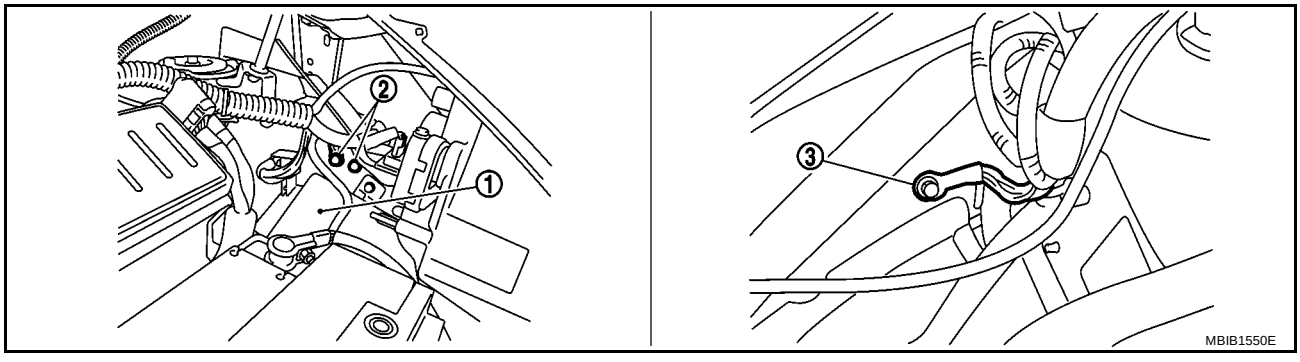

1. IPDM E/R
2. Body ground
3. Body ground

OK or NG

OK >> GO TO 2.
NG >> Repair or replace ground connections.

2. CHECK THROTTLE CONTROL MOTOR RELAY INPUT SIGNAL CIRCUIT-I

Check voltage between ECM terminal 2 and ground under the following conditions with CONSULT-II or tester.

Ignition switch	Voltage
OFF	Approximately 0V
ON	Battery voltage (11 - 14V)

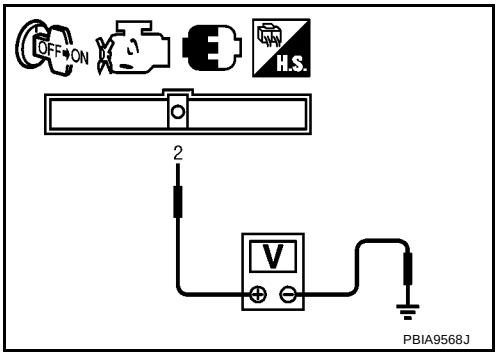

OK or NG

OK >> GO TO 10.
NG >> GO TO 3.

3. CHECK THROTTLE CONTROL MOTOR RELAY POWER SUPPLY CIRCUIT-I

1. Turn ignition switch OFF.
2. Check voltage between ECM terminal 15 and ground with CONSULT-II or tester.

Voltage: Battery voltage

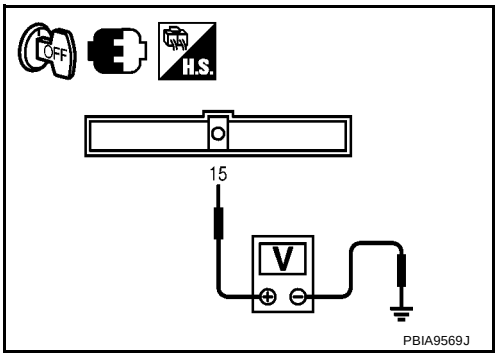

OK or NG

OK >> GO TO 7.
NG >> GO TO 4.

4. CHECK THROTTLE CONTROL MOTOR RELAY POWER SUPPLY CIRCUIT-II

1. Disconnect ECM harness connector.
2. Disconnect IPDM E/R harness connector E5.
3. Check harness continuity between ECM terminal 15 and IPDM E/R terminal 70. Refer to Wiring Diagram.

Continuity should exist.

4. Also check harness for short to ground and short to power.

OK or NG

OK >> GO TO 6.
NG >> GO TO 5.

5. DETECT MALFUNCTIONING PART

Check the following.

- Harness connectors E59, F1
- Harness for open or short between ECM and IPDM E/R

>> Repair open circuit or short to ground or short to power in harness or connectors.

6. CHECK FUSE

1. Disconnect 20A fuse.
2. Check 20A fuse for blown.

OK or NG

OK >> GO TO 9.
NG >> Replace 20A fuse.

7. CHECK THROTTLE CONTROL MOTOR RELAY INPUT SIGNAL CIRCUIT-II

1. Disconnect ECM harness connector.
2. Disconnect IPDM E/R harness connector E7.
3. Check harness continuity between ECM terminal 2 and IPDM E/R terminal 28.
   Refer to Wiring Diagram.

   Continuity should exist.

4. Also check harness for short to ground and short to power.

OK or NG

OK >> GO TO 9.
NG >> GO TO 8.

8. DETECT MALFUNCTIONING PART

Check the following.

- Harness connectors E59, F1
- Harness for open or short between ECM and IPDM E/R

>> Repair open circuit or short to ground or short to power in harness or connectors.

9. CHECK INTERMITTENT INCIDENT

Refer to EC-917, "TROUBLE DIAGNOSIS FOR INTERMITTENT INCIDENT" .

OK or NG

OK >> Replace IPDM E/R. Refer to PG-18, "IPDM E/R (INTELLIGENT POWER DISTRIBUTION MODULE ENGINE ROOM)" .
NG >> Repair or replace harness or connectors.

10. CHECK THROTTLE CONTROL MOTOR OUTPUT SIGNAL CIRCUIT FOR OPEN OR SHORT

1. Turn ignition switch OFF.
2. Disconnect electric throttle control actuator (1) harness connector.

– ⇦: Vehicle front

3. Disconnect ECM harness connector.
4. Check harness continuity between the following terminals.
   Refer to Wiring Diagram.

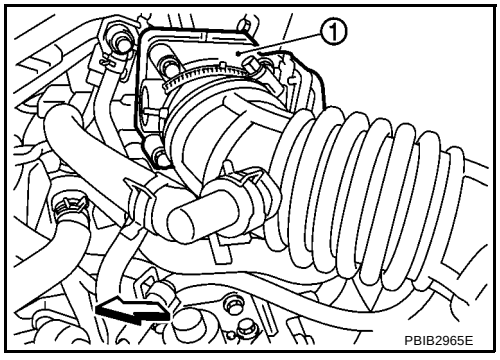

Electric throttle control actuator terminal	ECM terminal	Continuity
5	1	Should not exist
	4	Should exist
6	1	Should exist
	4	Should not exist

5. Also check harness for short to ground and short to power.

OK or NG

OK >> GO TO 11.
NG >> Repair or replace.

11. CHECK ELECTRIC THROTTLE CONTROL ACTUATOR VISUALLY

1. Remove the intake air duct.
2. Check if foreign matter is caught between the throttle valve (1) and the housing.

– ⇦: Vehicle front
– Illustration shows the view with intake air duct removed.

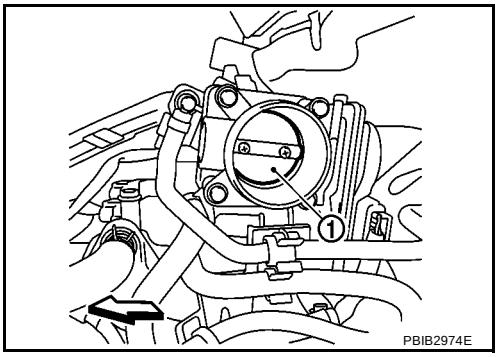

OK or NG

OK >> GO TO 12.
NG >> Remove the foreign matter and clean the electric throttle control actuator inside.

12. CHECK THROTTLE CONTROL MOTOR

Refer to EC-1089, "Component Inspection" .

OK or NG

OK >> GO TO 13.
NG >> GO TO 14.

13. CHECK INTERMITTENT INCIDENT

Refer to EC-917, "TROUBLE DIAGNOSIS FOR INTERMITTENT INCIDENT" .

OK or NG

OK >> GO TO 14.
NG >> Repair or replace harness or connectors.

14. REPLACE ELECTRIC THROTTLE CONTROL ACTUATOR

1. Replace the electric throttle control actuator.
2. Perform EC-857, "Throttle Valve Closed Position Learning" .
3. Perform EC-858, "Idle Air Volume Learning" .

>> **INSPECTION END**

Component Inspection

BBS004FG

THROTTLE CONTROL MOTOR

1. Disconnect electric throttle control actuator harness connector.
2. Check resistance between terminals 5 and 6.

Resistance: Approximately 1 - 15 Ω [at 25 °C (77°F)]

3. If NG, replace electric throttle control actuator and go to next step.
4. Perform EC-857, "Throttle Valve Closed Position Learning" .
5. Perform EC-858, "Idle Air Volume Learning" .

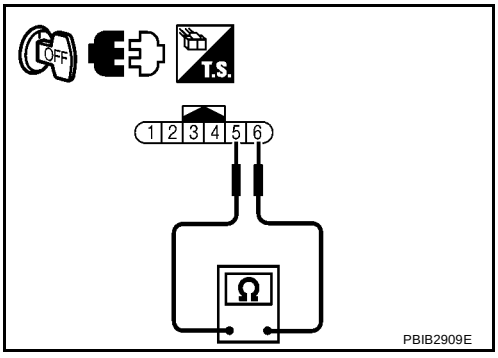

Removal and Installation

BBS004FH

ELECTRIC THROTTLE CONTROL ACTUATOR

Refer to EM-120, "INTAKE MANIFOLD" .

DTC P1124, P1126 THROTTLE CONTROL MOTOR RELAY

PFP:16119

Component Description

BBS004FI

Power supply for the throttle control motor is provided to the ECM via throttle control motor relay. The throttle control motor relay is ON/OFF controlled by the ECM. When the ignition switch is turned ON, the ECM sends an ON signal to throttle control motor relay and battery voltage is provided to the ECM. When the ignition switch is turned OFF, the ECM sends an OFF signal to throttle control motor relay and battery voltage is not provided to the ECM.

CONSULT-II Reference Value in Data Monitor Mode

BBS004FJ

Specification data are reference values.

MONITOR ITEM	CONDITION	SPECIFICATION
THRTL RELAY	● Ignition switch: ON	ON

On Board Diagnosis Logic

BBS004FK

These self-diagnoses have the one trip detection logic.

DTC No.	Trouble diagnosis name	DTC detecting condition	Possible cause
P1124 1124	Throttle control motor relay circuit short	ECM detect the throttle control motor relay is stuck ON.	● Harness or connectors (Throttle control motor relay circuit is shorted) ● Throttle control motor relay
P1126 1126	Throttle control motor relay circuit open	ECM detects a voltage of power source for throttle control motor is excessively low.	● Harness or connectors (Throttle control motor relay circuit is open) ● Throttle control motor relay

FAIL-SAFE MODE

When the malfunction is detected, ECM enters fail-safe mode and the MI lights up.

Engine operating condition in fail-safe mode
ECM stops the electric throttle control actuator control, throttle valve is maintained at a fixed opening (approx. 5 degrees) by the return spring.

DTC Confirmation Procedure

BBS004FL

NOTE:
If DTC Confirmation Procedure has been previously conducted, always turn ignition switch OFF and wait at least 10 seconds before conducting the next test.

PROCEDURE FOR DTC P1124

With CONSULT-II

1. Turn ignition switch ON and wait at least 1 seconds.
2. Select “DATA MONITOR” mode with CONSULT-II.
3. If DTC is detected, go to EC-1093, "Diagnostic Procedure" .

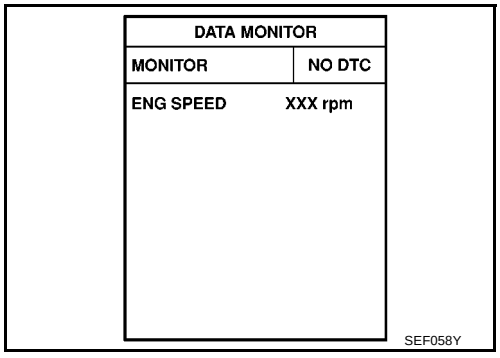

With GST

Follow the procedure “With CONSULT-II” above.

PROCEDURE FOR DTC P1126

TESTING CONDITION:
Before performing the following procedure, confirm that battery voltage is more than 8V.

With CONSULT-II

1. Turn ignition switch ON and wait at least 2 second.
2. Select “DATA MONITOR” mode with CONSULT-II.
3. Start engine and let it idle for 5 seconds.
4. If DTC is detected, go to EC-1093, "Diagnostic Procedure" .

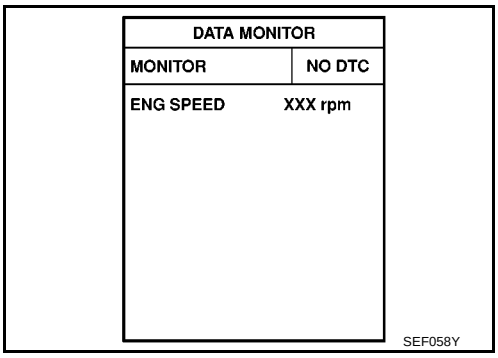

With GST

Follow the procedure “With CONSULT-II” above.

Wiring Diagram

BBS004FM

EC-ETC2-01

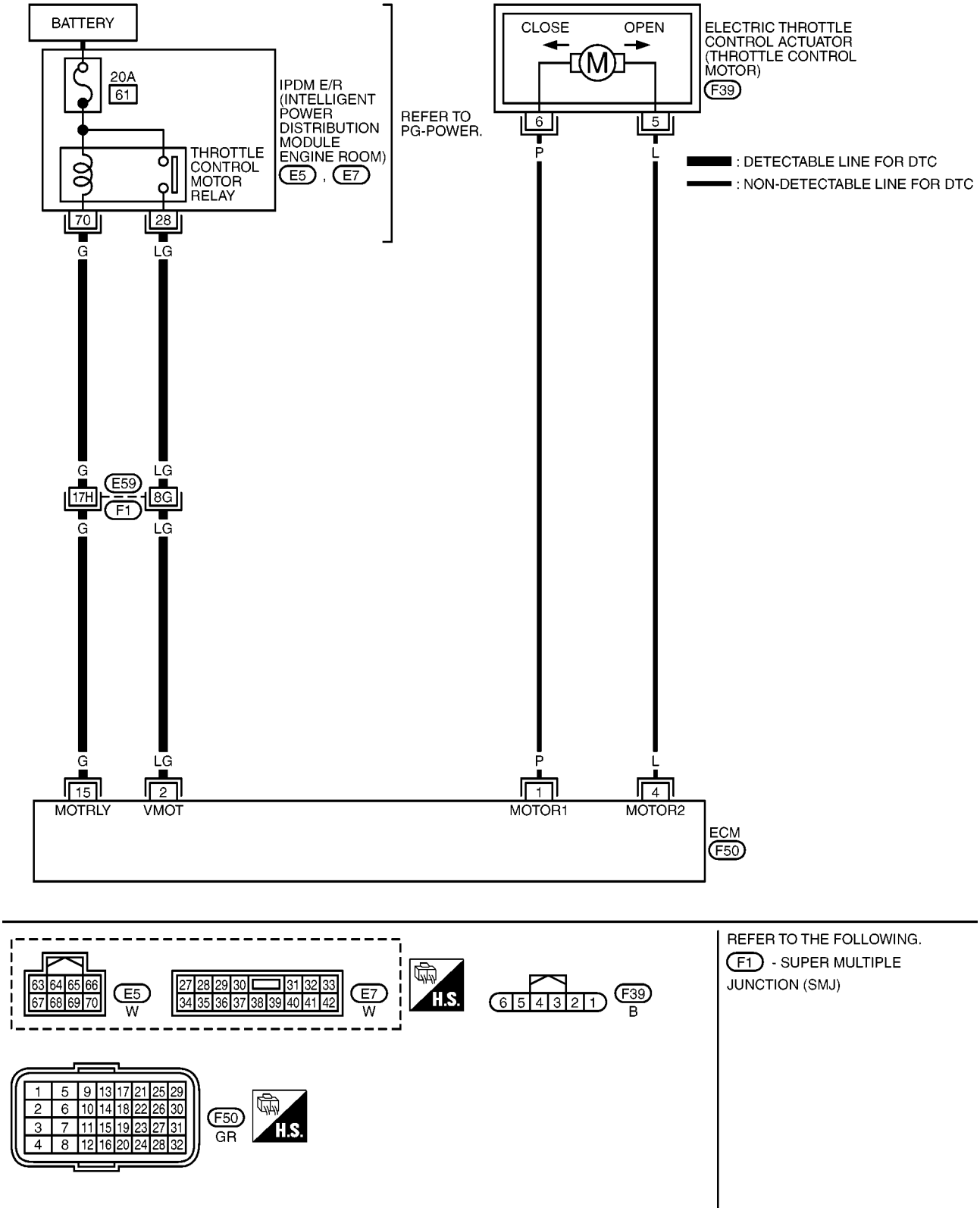

Specification data are reference values and are measured between each terminal and ground.
Pulse signal is measured by CONSULT-II.

CAUTION:
Do not use ECM ground terminals when measuring input/output voltage. Doing so may result in damage to the ECM's transistor. Use a ground other than ECM terminals, such as the ground.

TERMINAL NO.	WIRE COLOR	ITEM	CONDITION	DATA (DC Voltage)
1	P	Throttle control motor (Open)	**[Ignition switch: ON]** ● Engine stopped ● Shift lever: D (A/T), 1st (M/T) ● Accelerator pedal: Fully depressed	0 - 14V★ 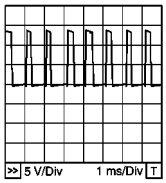 PBIB1105E
2	LG	Throttle control motor relay power supply	**[Ignition switch: ON]**	BATTERY VOLTAGE (11 - 14V)
4	L	Throttle control motor (Close)	**[Ignition switch: ON]** ● Engine stopped ● Shift lever: D (A/T), 1st (M/T) ● Accelerator pedal: Released	0 - 14V★ 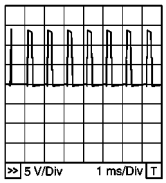 PBIB1104E
15	G	Throttle control motor relay	**[Ignition switch: OFF]**	BATTERY VOLTAGE (11 - 14V)
			[Ignition switch: ON]	0 - 1.0V

★: Average voltage for pulse signal (Actual pulse signal can be confirmed by oscilloscope.)

Diagnostic Procedure

BBS004FN

1. CHECK THROTTLE CONTROL MOTOR RELAY POWER SUPPLY CIRCUIT-I

1. Turn ignition switch OFF.
2. Check voltage between ECM terminal 15 and ground with CONSULT-II or tester.

Voltage: Battery voltage

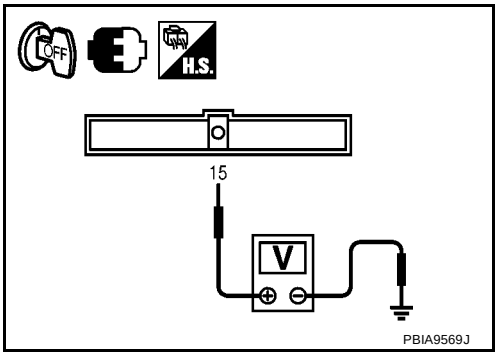

PBIA9569J

OK or NG

OK >> GO TO 5.
NG >> GO TO 2.

2. CHECK THROTTLE CONTROL MOTOR RELAY POWER SUPPLY CIRCUIT-II

1. Disconnect ECM harness connector.
2. Disconnect IPDM E/R harness connector E5.
3. Check continuity between ECM terminal 15 and IPDM E/R terminal 70.
   Refer to Wiring Diagram.

   Continuity should exist.

4. Also check harness for short to ground and short to power.

OK or NG

OK >> GO TO 4.
NG >> GO TO 3.

3. DETECT MALFUNCTIONING PART

Check the following.

- Harness connectors E59, F1
- Harness for open or short between ECM and IPDM E/R

>> Repair open circuit or short to ground or short to power in harness or connectors.

4. CHECK FUSE

1. Disconnect 20A fuse.
2. Check 20A fuse for blown.

OK or NG

OK >> GO TO 8.
NG >> Replace 20A fuse.

5. CHECK THROTTLE CONTROL MOTOR RELAY INPUT SIGNAL CIRCUIT-I

1. Check voltage between ECM terminal 2 and ground under the following conditions with CONSULT-II or tester.

Ignition switch	Voltage
OFF	Approximately 0V
ON	Battery voltage (11 - 14V)

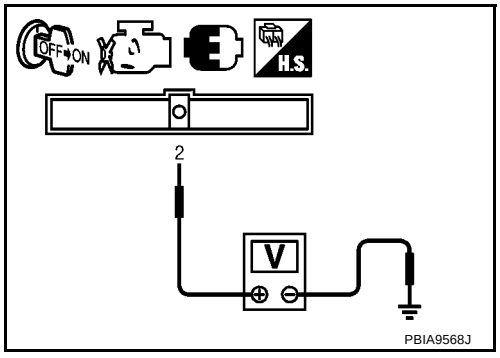

OK or NG

OK >> GO TO 8.
NG >> GO TO 6.

6. CHECK THROTTLE CONTROL MOTOR RELAY INPUT SIGNAL CIRCUIT-II

1. Turn ignition switch OFF.
2. Disconnect ECM harness connector.
3. Disconnect IPDM E/R harness connector E7.
4. Check continuity between ECM terminal 2 and IPDM E/R terminal 28.
   Refer to Wiring Diagram.

   Continuity should exist.

5. Also check harness for short to ground and short to power.

OK or NG

OK >> GO TO 8.
NG >> GO TO 7.

7. DETECT MALFUNCTIONING PART

Check the following.

- Harness connectors E59, F1
- Harness for open or short between ECM and IPDM E/R

>> Repair open circuit or short to ground or short to power in harness or connectors.

8. CHECK INTERMITTENT INCIDENT

Refer to EC-917, "TROUBLE DIAGNOSIS FOR INTERMITTENT INCIDENT" .

OK or NG

OK >> Replace IPDM E/R. Refer to PG-18, "IPDM E/R (INTELLIGENT POWER DISTRIBUTION MODULE ENGINE ROOM)" .

NG >> Repair or replace harness or connectors.

DTC P1128 THROTTLE CONTROL MOTOR

PFP:16119

Component Description

BBS004FO

The throttle control motor is operated by the ECM and it opens and closes the throttle valve.
The current opening angle of the throttle valve is detected by the throttle position sensor and it provides feedback to the ECM to control the throttle control motor to make the throttle valve opening angle properly in response to driving condition.

On Board Diagnosis Logic

BBS004FP

This self-diagnosis has the one trip detection logic.

DTC No.	Trouble diagnosis name	DTC detecting condition	Possible cause
P1128 1128	Throttle control motor circuit short	ECM detects short in both circuits between ECM and throttle control motor.	● Harness or connectors (Throttle control motor circuit is shorted.) ● Electric throttle control actuator (Throttle control motor)

FAIL-SAFE MODE

When the malfunction is detected, ECM enters fail-safe mode and the MI lights up.

Engine operating condition in fail-safe mode
ECM stops the electric throttle control actuator control, throttle valve is maintained at a fixed opening (approx. 5 degrees) by the return spring.

DTC Confirmation Procedure

BBS004FQ

NOTE:
If DTC Confirmation Procedure has been previously conducted, always turn ignition switch OFF and wait at least 10 seconds before conducting the next test.

WITH CONSULT-II

1. Turn ignition switch ON and wait at least 2 seconds.
2. Select “DATA MONITOR” mode with CONSULT-II.
3. Start engine and let it idle for 5 seconds.
4. If DTC is detected, go to EC-1098, "Diagnostic Procedure" .

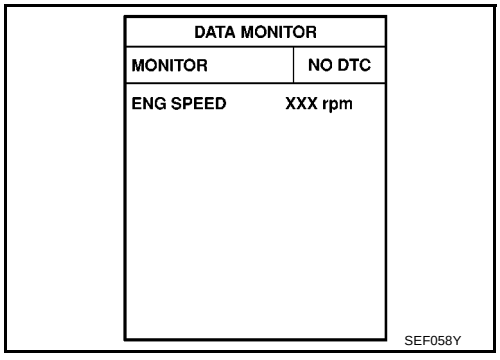

WITH GST

Follow the procedure “WITH CONSULT-II” above.

Wiring Diagram

BBS004FR

EC-ETC3-01

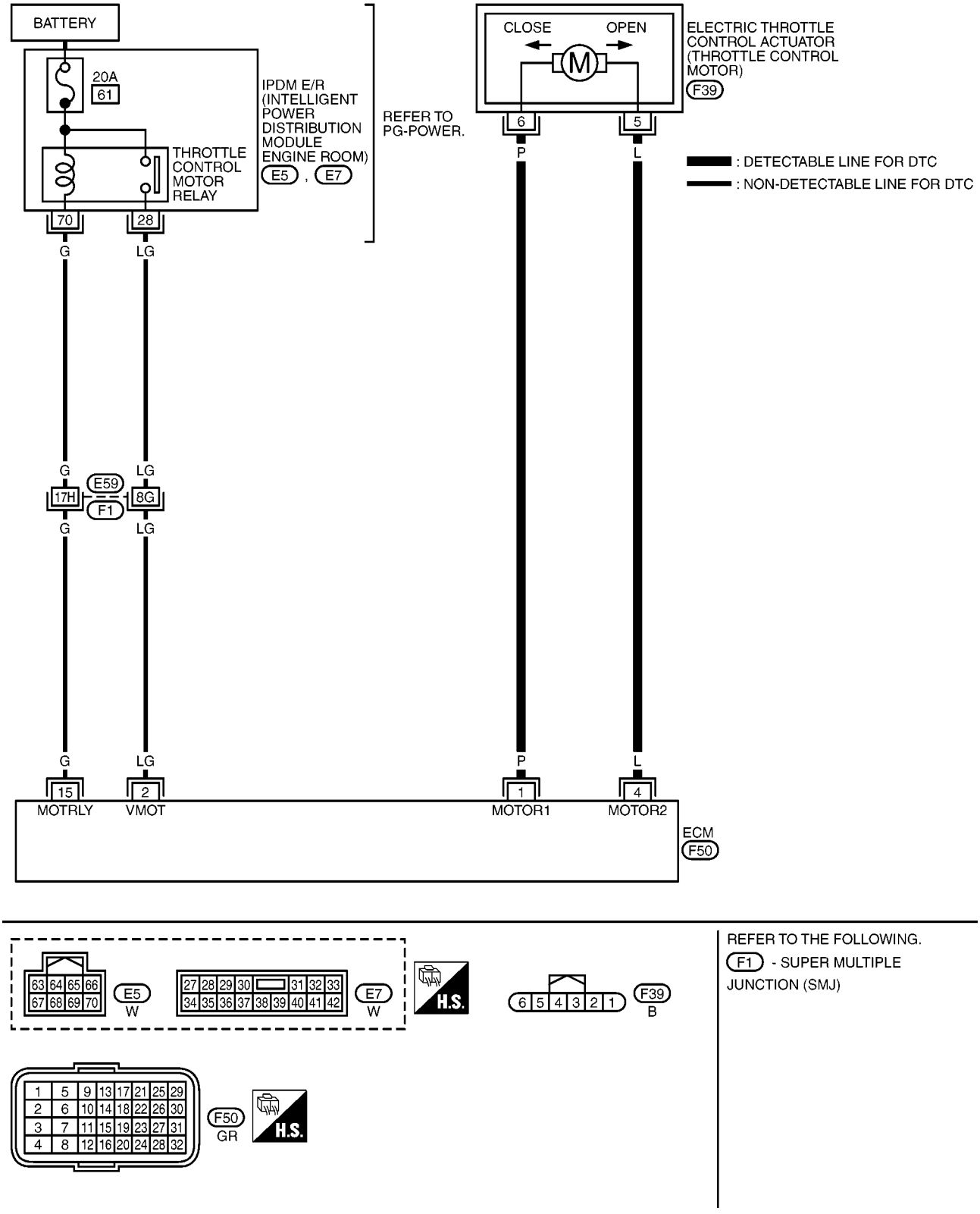

Specification data are reference values and are measured between each terminal and ground.
Pulse signal is measured by CONSULT-II.

CAUTION:

Do not use ECM ground terminals when measuring input/output voltage. Doing so may result in damage to the ECM's transistor. Use a ground other than ECM terminals, such as the ground.

TERMINAL NO.	WIRE COLOR	ITEM	CONDITION	DATA (DC Voltage)
1	P	Throttle control motor (Open)	**[Ignition switch: ON]** ● Engine stopped ● Shift lever: D (A/T), 1st (M/T) ● Accelerator pedal: Fully depressed	0 - 14V★ 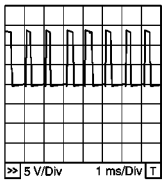 PBIB1105E
2	LG	Throttle control motor relay power supply	**[Ignition switch: ON]**	BATTERY VOLTAGE (11 - 14V)
4	L	Throttle control motor (Close)	**[Ignition switch: ON]** ● Engine stopped ● Shift lever: D (A/T), 1st (M/T) ● Accelerator pedal: Released	0 - 14V★ 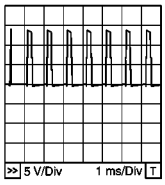 PBIB1104E
15	G	Throttle control motor relay	**[Ignition switch: OFF]**	BATTERY VOLTAGE (11 - 14V)
			[Ignition switch: ON]	0 - 1.0V

★: Average voltage for pulse signal (Actual pulse signal can be confirmed by oscilloscope.)

Diagnostic Procedure

BBS004FS

1. CHECK GROUND CONNECTIONS

1. Turn ignition switch OFF.
2. Loosen and retighten ground screws on the body.
   Refer to EC-924, "Ground Inspection" .

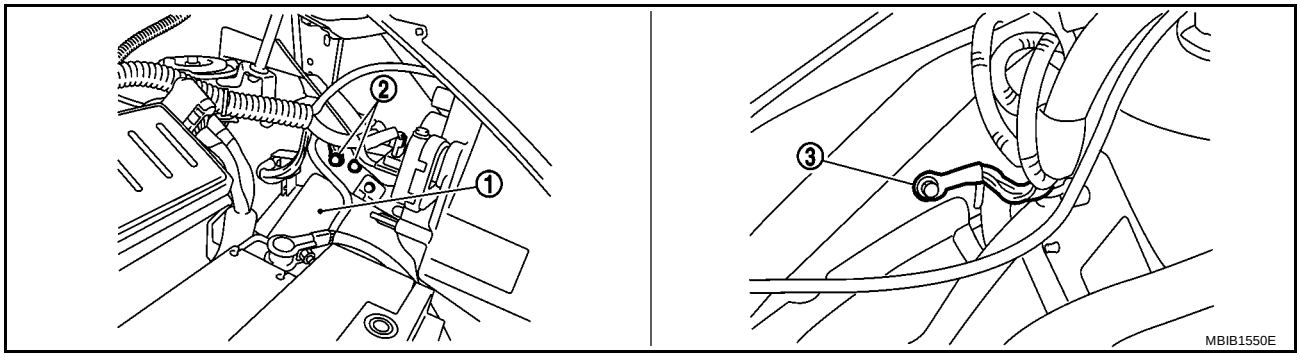

1. IPDM E/R
2. Body ground
3. Body ground

OK or NG

OK >> GO TO 2.
NG >> Repair or replace ground connections.

2. CHECK THROTTLE CONTROL MOTOR OUTPUT SIGNAL CIRCUIT FOR OPEN AND SHORT

1. Disconnect electric throttle control actuator (1) harness connector.

– ⇦: Vehicle front

2. Disconnect ECM harness connector.
3. Check harness continuity between the following terminals. Refer to Wiring Diagram.

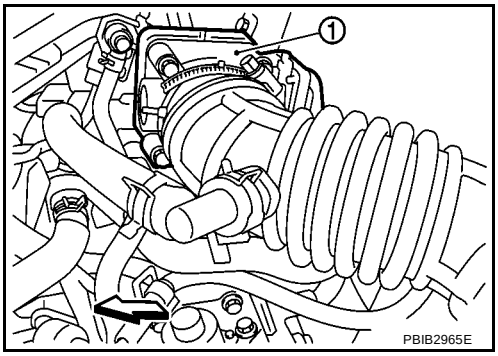

Electric throttle control actuator terminal	ECM terminal	Continuity
5	1	Should not exist
	4	Should exist
6	1	Should exist
	4	Should not exist

4. Also check harness for short to ground and short to power.

OK or NG

OK >> GO TO 3.
NG >> Repair or replace.

3. CHECK THROTTLE CONTROL MOTOR

Refer to EC-1100, "Component Inspection" .

OK or NG

OK >> GO TO 4.
NG >> GO TO 5.

4. CHECK INTERMITTENT INCIDENT

Refer to EC-917, "TROUBLE DIAGNOSIS FOR INTERMITTENT INCIDENT" .

OK or NG

OK >> GO TO 5.
NG >> Repair or replace harness or connectors.

5. REPLACE ELECTRIC THROTTLE CONTROL ACTUATOR

1. Replace the electric throttle control actuator.
2. Perform EC-857, "Throttle Valve Closed Position Learning" .
3. Perform EC-858, "Idle Air Volume Learning" .

>> **INSPECTION END**

Component Inspection

BBS004FT

THROTTLE CONTROL MOTOR

1. Disconnect electric throttle control actuator harness connector.
2. Check resistance between terminals 5 and 6.

Resistance: Approximately 1 - 15 Ω [at 25 °C (77°F)]

3. If NG, replace electric throttle control actuator and go to next step.
4. Perform EC-857, "Throttle Valve Closed Position Learning" .
5. Perform EC-858, "Idle Air Volume Learning" .

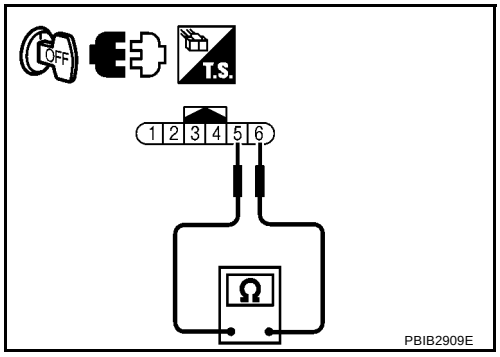

Removal and Installation

BBS004FU

ELECTRIC THROTTLE CONTROL ACTUATOR

Refer to EM-120, "INTAKE MANIFOLD" .

DTC P1143 HO2S1

PFP:22690

Component Description

BBS004FV

The heated oxygen sensor 1 is placed into the exhaust manifold. It detects the amount of oxygen in the exhaust gas compared to the outside air. The heated oxygen sensor 1 has a closed-end tube made of ceramic zirconia. The zirconia generates voltage from approximately 1V in richer conditions to 0V in leaner conditions. The heated oxygen sensor 1 signal is sent to the ECM. The ECM adjusts the injection pulse duration to achieve the ideal air-fuel ratio. The ideal air-fuel ratio occurs near the radical change from 1V to 0V.

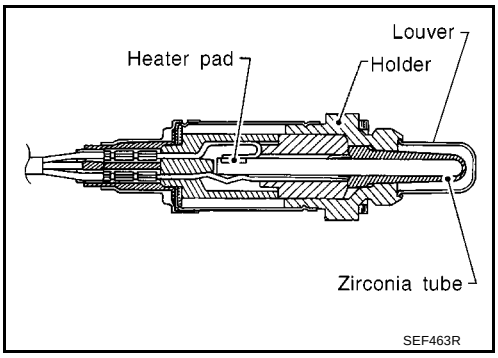

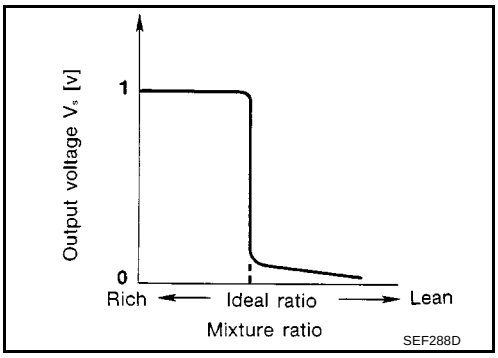

CONSULT-II Reference Value in Data Monitor Mode

BBS004FW

Specification data are reference values.

MONITOR ITEM	CONDITION		SPECIFICATION
HO2S1 (B1)	● Engine: After warming up	Maintaining engine speed at 2,000 rpm	0 - 0.3V ←→ Approx. 0.6 - 1.0V
HO2S1 MNTR (B1)			LEAN ←→ RICH Changes more than 5 times during 10 seconds.

On Board Diagnosis Logic

BBS004FX

To judge the malfunction, the output from the heated oxygen sensor 1 is monitored to determine whether the “rich” output is sufficiently high and whether the “lean” output is sufficiently low. When both the outputs are shifting to the lean side, the malfunction will be detected.

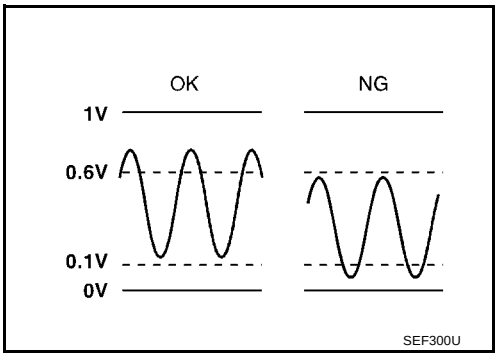

DTC No.	Trouble diagnosis name	DTC detecting condition	Possible cause
P1143 1143	Heated oxygen sensor 1 lean shift monitoring	The maximum and minimum voltage from the sensor are not reached to the specified voltages.	● Heated oxygen sensor 1 ● Heated oxygen sensor 1 heater ● Fuel pressure ● Fuel injector ● Intake air leaks

DTC Confirmation Procedure

BBS004FY

CAUTION:

Always drive vehicle at a safe speed.

NOTE:

If DTC Confirmation Procedure has been previously conducted, always turn ignition switch OFF and wait at least 10 seconds before conducting the next test.

TESTING CONDITION:

- **Always perform at a temperature above –10°C (14°F).**
- **Before performing following procedure, confirm that battery voltage is more than 11V at idle.**

WITH CONSULT-II

1. Start engine and warm it up to normal operating temperature.
2. Stop engine and wait at least 10 seconds.
3. Turn ignition switch ON and select “HO2S1 (B1) P1143” of “HO2S1” in “DTC WORK SUPPORT” mode with CONSULT-II.
4. Touch “START”.
5. Start engine and let it idle for at least 3 minutes.

   NOTE:
   Never raise engine speed above 3,600 rpm after this step. If the engine speed limit is exceeded, return to step 5.

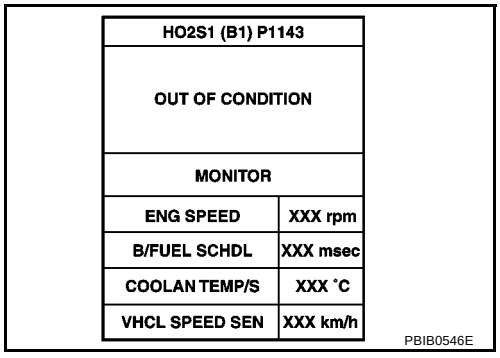

6. When the following conditions are met, “TESTING” will be displayed on the CONSULT-II screen. Maintain the conditions continuously until “TESTING” changes to “COMPLETED”. (It will take approximately 50 seconds or more.)

ENG SPEED	A/T: 1,300 - 2,800 rpm M/T: 1,500 - 3,600 rpm
VHCL SPEED SE	Less than 100 km/h (62 MPH)
B/FUEL SCHDL	A/T: 2.8 - 11.2 msec M/T: 2.0 - 11.2 msec
Shift lever	Suitable position

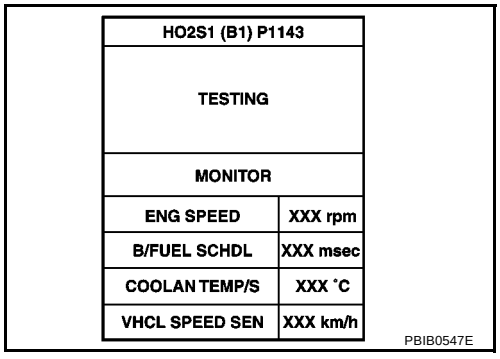

If “TESTING” is not displayed after 5 minutes, retry from step 2.

7. Make sure that “OK” is displayed after touching “SELF-DIAG RESULTS”. If “NG” is displayed, refer to EC-1103, "Diagnostic Procedure" .

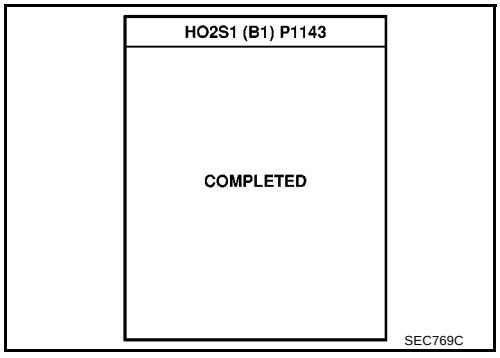

Overall Function Check

BBS004FZ

Use this procedure to check the overall function of the heated oxygen sensor 1 circuit. During this check, a 1st trip DTC might not be confirmed.

WITH GST

1. Start engine and warm it up to normal operating temperature.
2. Set voltmeter probes between ECM terminal 49 (HO2S1 signal) and ground.
3. Check one of the following with engine speed held at 2,000 rpm constant under no load.

- The maximum voltage is over 0.6V at least 1 time.
- The minimum voltage is over 0.1V at least 1 time.

4. If NG, go to EC-1103, "Diagnostic Procedure" .

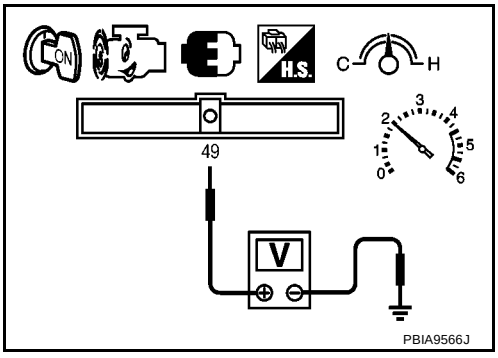

Diagnostic Procedure

BBS004G0

1. CHECK GROUND CONNECTIONS

1. Turn ignition switch OFF.
2. Loosen and retighten ground screws on the body.
   Refer to EC-924, "Ground Inspection" .

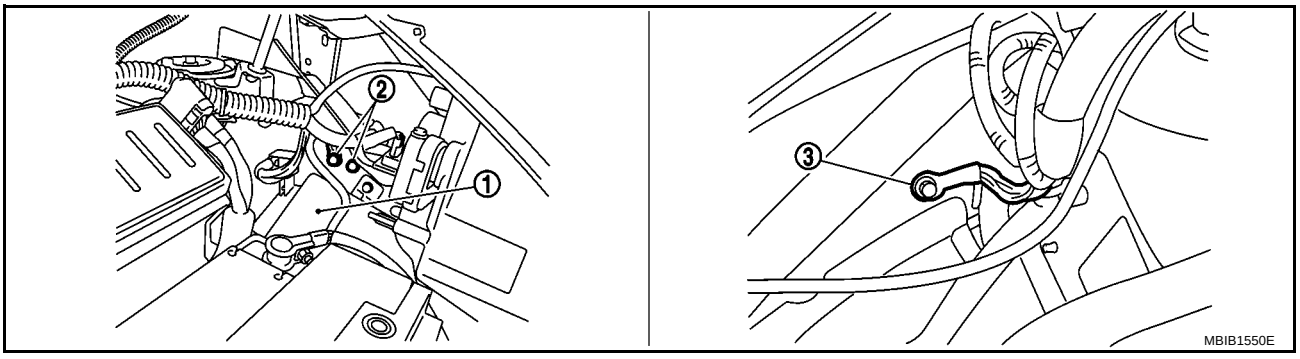

1. IPDM E/R
2. Body ground
3. Body ground

OK or NG

OK >> GO TO 2.
NG >> Repair or replace ground connections.

2. RETIGHTEN HEATED OXYGEN SENSOR 1

Loosen and retighten heated oxygen sensor 1 (1).

- ⇦: Vehicle front
- Exhaust manifold (2)

Tightening torque: 50 N·m (5.1 kg-m, 37 ft-lb)

>> GO TO 3.

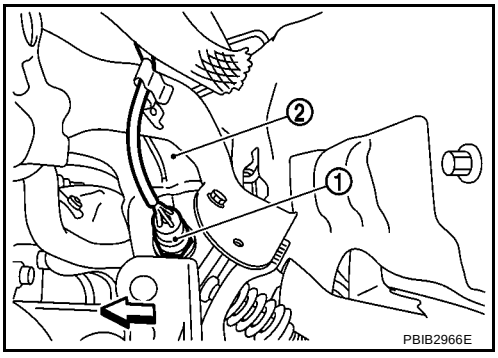

3. CLEAR THE SELF-LEARNING DATA

With CONSULT-II

1. Start engine and warm it up to normal operating temperature.
2. Select “SELF-LEARNING CONT” in “WORK SUPPORT” mode with CONSULT-II.
3. Clear the self-learning control coefficient by touching “CLEAR”.
4. Run engine for at least 10 minutes at idle speed.
   Is the 1st trip DTC P0171 detected?
   Is it difficult to start engine?

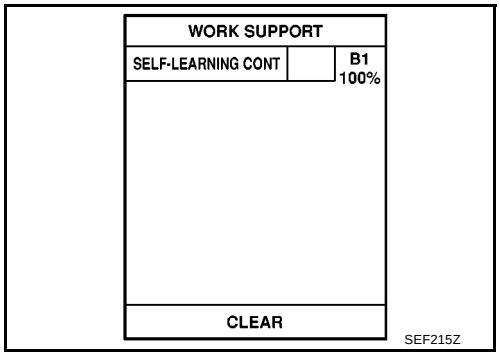

Without CONSULT-II

1. Start engine and warm it up to normal operating temperature.
2. Turn ignition switch OFF.
3. Disconnect mass air flow sensor (1) harness connector, and restart and run engine for at least 5 seconds at idle speed.
4. Stop engine and reconnect mass air flow sensor harness connector.
5. Make sure that DTC P0102 is displayed.
6. Erase the DTC memory. Refer to EC-841, "HOW TO ERASE EMISSION-RELATED DIAGNOSTIC INFORMATION" .
7. Make sure that DTC P0000 is displayed.
8. Run engine for at least 10 minutes at idle speed.
   Is the 1st trip DTC P0171 detected?
   Is it difficult to start engine?

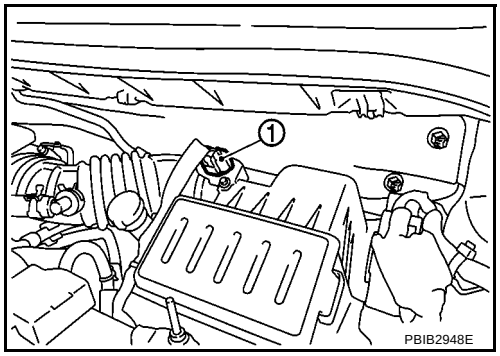

Yes or No

Yes >> Perform trouble diagnosis for DTC P0171. Refer to EC-1012, "DTC P0171 FUEL INJECTION SYSTEM FUNCTION" .
No >> GO TO 4.

4. CHECK HEATED OXYGEN SENSOR 1 HEATER

Refer to EC-990, "Component Inspection" .

OK or NG

OK >> GO TO 5.
NG >> Replace heated oxygen sensor 1.

5. CHECK HEATED OXYGEN SENSOR 1

Refer to EC-975, "Component Inspection" .

OK or NG

OK >> GO TO 6.
NG >> Replace heated oxygen sensor 1.

6. CHECK INTERMITTENT INCIDENT

Refer to EC-917, "TROUBLE DIAGNOSIS FOR INTERMITTENT INCIDENT" .
For circuit, refer to EC-970, "Wiring Diagram" .

>> **INSPECTION END**

Component Inspection

BBS004G1

HEATED OXYGEN SENSOR 1

With CONSULT-II

1. Start engine and warm it up to normal operating temperature.
2. Select “MANU TRIG” and adjust “TRIGGER POINT” to 100% in “DATA MONITOR” mode with CONSULT-II.
3. Select “HO2S1 (B1)” and “HO2S1 MNTR (B1)”.
4. Hold engine speed at 2,000 rpm under no load during the following steps.
5. Touch “RECORD” on CONSULT-II screen.

DATA MONITOR	
MONITOR	NO DTC
ENG SPEED	XXX rpm
MAS A/F SE-B1	XXX V
COOLAN TEMP/S	XXX °C
HO2S1 (B1)	XXX V
HO2S1 MNTR (B1)	LEAN

SEF646Y

6. Check the following.
   - “HO2S1 MNTR (B1)” in “DATA MONITOR” mode changes from “RICH” to “LEAN” to “RICH” more than 5 times in 10 seconds.
     5 times (cycles) are counted as shown in the figure.
   - “HO2S1 (B1)” voltage goes above 0.6V at least once.
   - “HO2S1 (B1)” voltage goes below 0.3V at least once.
   - “HO2S1 (B1)” voltage never exceeds 1.0V.

cycle	1	2	3	4	5
HO2S1 MNTR (B1)	R-L-R-L-R-L-R-L-R-L-R				

R means HO2S1 MNTR (B1) indicates RICH
L means HO2S1 MNTR (B1) indicates LEAN

SEF217YA

Trigger	ENG SPEED	HO2S1 (B1)
	rpm	V
XXX	XXX	XXX
XXX	XXX	XXX
XXX	XXX	XXX
XXX	XXX	XXX
XXX	XXX	XXX
XXX	XXX	XXX
XXX	XXX	XXX
XXX	XXX	XXX
XXX	XXX	XXX
XXX	XXX	XXX
XXX	XXX	XXX
XXX	XXX	XXX

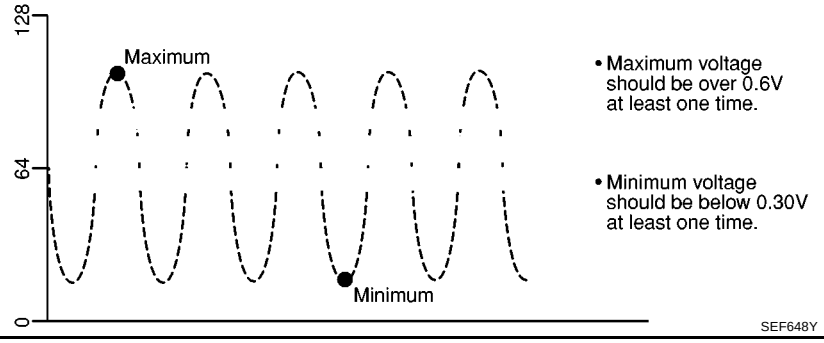

CAUTION:

- **Discard any heated oxygen sensor which has been dropped from a height of more than 0.5 m (19.7 in) onto a hard surface such as a concrete floor; use a new one.**
- **Before installing new oxygen sensor, clean exhaust system threads using Oxygen Sensor Thread Cleaner tool and approved anti-seize lubricant.**

Without CONSULT-II

1. Start engine and warm it up to normal operating temperature.
2. Set voltmeter probes between ECM terminal 49 (HO2S1 signal) and ground.

3. Check the following with engine speed held at 2,000 rpm constant under no load.
   - The voltage fluctuates between 0 to 0.3V and 0.6 to 1.0V more than 5 times within 10 seconds.
   - The maximum voltage is over 0.6V at least 1 time.
   - The minimum voltage is below 0.3V at least 1 time.
   - The voltage never exceeds 1.0V.

   1 time: 0 - 0.3V → 0.6 - 1.0V → 0 - 0.3V
   2 times: 0 - 0.3V → 0.6 - 1.0V → 0 - 0.3V → 0.6 - 1.0V → 0 - 0.3V

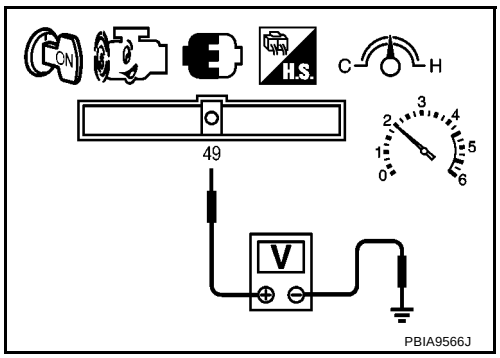

CAUTION:

- **Discard any heated oxygen sensor which has been dropped from a height of more than 0.5 m (19.7 in) onto a hard surface such as a concrete floor; use a new one.**
- **Before installing new oxygen sensor, clean exhaust system threads using Oxygen Sensor Thread Cleaner tool and approved anti-seize lubricant.**

Removal and Installation

BBS004G2

HEATED OXYGEN SENSOR 1

Refer to EM-124, "EXHAUST MANIFOLD" .

DTC P1144 HO2S1

PFP:22690

Component Description

BBS004G3

The heated oxygen sensor 1 is placed into the exhaust manifold. It detects the amount of oxygen in the exhaust gas compared to the outside air. The heated oxygen sensor 1 has a closed-end tube made of ceramic zirconia. The zirconia generates voltage from approximately 1V in richer conditions to 0V in leaner conditions. The heated oxygen sensor 1 signal is sent to the ECM. The ECM adjusts the injection pulse duration to achieve the ideal air-fuel ratio. The ideal air-fuel ratio occurs near the radical change from 1V to 0V.

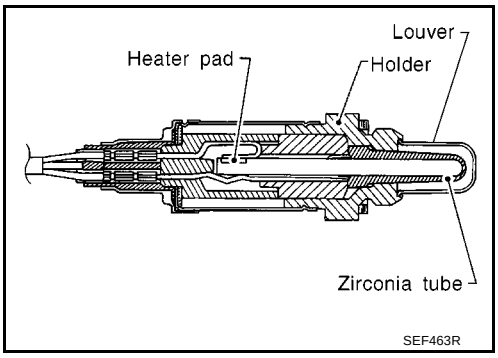

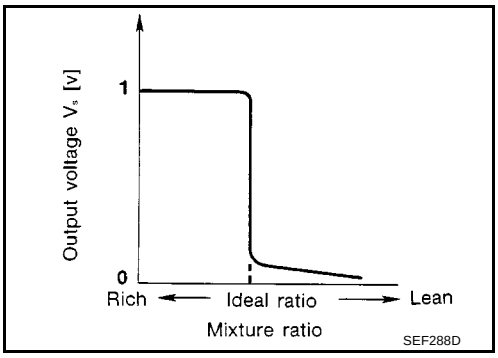

CONSULT-II Reference Value in Data Monitor Mode

BBS004G4

Specification data are reference values.

MONITOR ITEM	CONDITION		SPECIFICATION
HO2S1 (B1)	● Engine: After warming up	Maintaining engine speed at 2,000 rpm	0 - 0.3V ←→ Approx. 0.6 - 1.0V
HO2S1 MNTR (B1)			LEAN ←→ RICH Changes more than 5 times during 10 seconds.

On Board Diagnosis Logic

BBS004G5

To judge the malfunction, the output from the heated oxygen sensor 1 is monitored to determine whether the “rich” output is sufficiently high and “lean” output is sufficiently low. When both the outputs are shifting to the rich side, the malfunction will be detected.

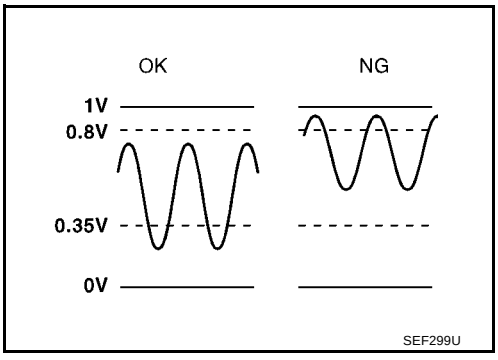

DTC No.	Trouble diagnosis name	DTC detecting condition	Possible cause
P1144 1144	Heated oxygen sensor 1 rich shift monitoring	The maximum and minimum voltages from the sensor are beyond the specified voltages.	● Heated oxygen sensor 1 ● Heated oxygen sensor 1 heater ● Fuel pressure ● Fuel injector

DTC Confirmation Procedure

BBS004G6

CAUTION:

Always drive vehicle at a safe speed.

NOTE:

If DTC Confirmation Procedure has been previously conducted, always turn ignition switch OFF and wait at least 10 seconds before conducting the next test.

TESTING CONDITION:

- **Always perform at a temperature above –10°C (14°F).**
- **Before performing the following procedure, confirm that battery voltage is more than 11V at idle.**

WITH CONSULT-II

1. Start engine and warm it up to normal operating temperature.
2. Stop engine and wait at least 5 seconds.
3. Turn ignition switch ON and select “HO2S1 (B1) P1144” of “HO2S1” in “DTC WORK SUPPORT” mode with CONSULT-II.
4. Touch “START”.
5. Start engine and let it idle for at least 3 minutes.

   NOTE:
   Never raise engine speed above 3,600 rpm after this step. If the engine speed limit is exceeded, return to step 5.

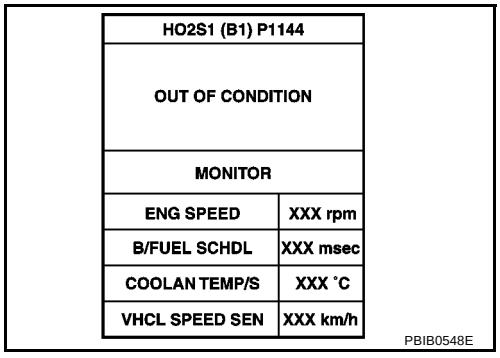

6. When the following conditions are met, “TESTING” will be displayed on the CONSULT-II screen. Maintain the conditions continuously until “TESTING” changes to “COMPLETED”. (It will take approximately 50 seconds or more.)

ENG SPEED	A/T: 1,300 - 2,800 rpm M/T: 1,500 - 3,600 rpm
VHCL SPEED SE	Less than 100 km/h (62 MPH)
B/FUEL SCHDL	A/T: 2.8 - 11.2 msec M/T: 2.0 - 11.2 msec
Shift lever	Suitable position

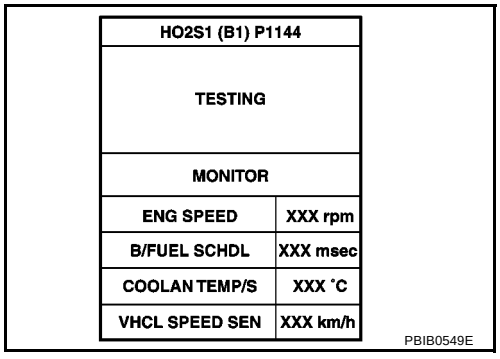

If “TESTING” is not displayed after 5 minutes, retry from step 2.

7. Make sure that “OK” is displayed after touching “SELF-DIAG RESULTS”. If “NG” is displayed, refer to EC-1109, "Diagnostic Procedure" .

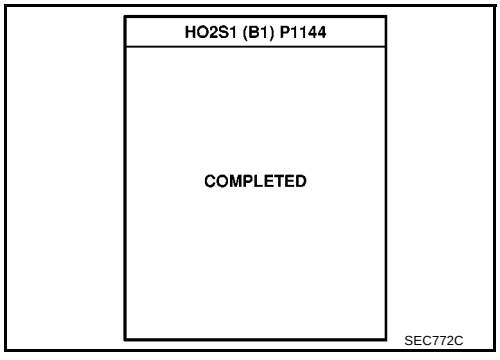

Overall Function Check

BBS004G7

Use this procedure to check the overall function of the heated oxygen sensor 1 circuit. During this check, a 1st trip DTC might not be confirmed.

WITH GST

1. Start engine and warm it up to normal operating temperature.
2. Set voltmeter probes between ECM terminal 49 (HO2S1 signal) and ground.
3. Check one of the following with engine speed held at 2,000 rpm constant under no load.

- The maximum voltage is below 0.8V at least 1 time.
- The minimum voltage is below 0.35V at least 1 time.

4. If NG, go to EC-1109, "Diagnostic Procedure" .

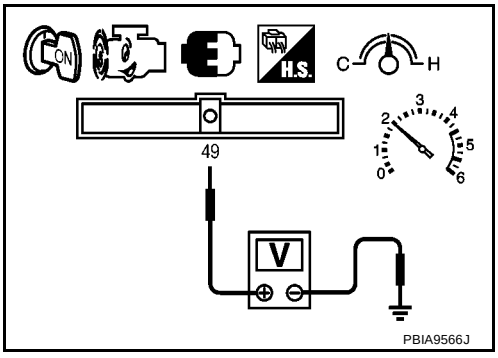

Diagnostic Procedure

BBS004G8

1. CHECK GROUND CONNECTIONS

1. Turn ignition switch OFF.
2. Loosen and retighten ground screws on the body.
   Refer to EC-924, "Ground Inspection" .

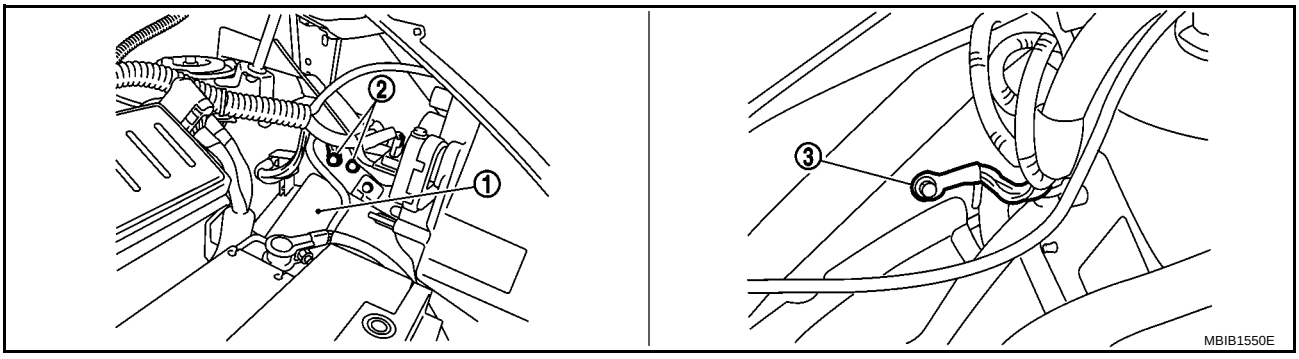

1. IPDM E/R
2. Body ground
3. Body ground

OK or NG

OK >> GO TO 2.
NG >> Repair or replace ground connections.

2. RETIGHTEN HEATED OXYGEN SENSOR 1

Loosen and retighten heated oxygen sensor 1 (1).

- ⇦: Vehicle front
- Exhaust manifold (2)

Tightening torque: 50 N·m (5.1 kg-m, 37 ft-lb)

>> GO TO 3.

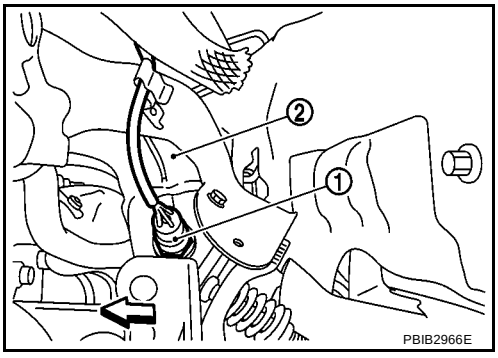

3. CLEAR THE SELF-LEARNING DATA

With CONSULT-II

1. Start engine and warm it up to normal operating temperature.
2. Select “SELF-LEARNING CONT” in “WORK SUPPORT” mode with CONSULT-II.
3. Clear the self-learning control coefficient by touching “CLEAR”.
4. Run engine for at least 10 minutes at idle speed.
   Is the 1st trip DTC P0172 detected?
   Is it difficult to start engine?

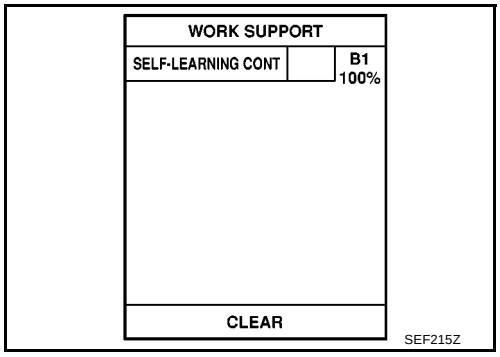

Without CONSULT-II

1. Start engine and warm it up to normal operating temperature.
2. Turn ignition switch OFF.
3. Disconnect mass air flow sensor (1) harness connector, and restart and run engine for at least 5 seconds at idle speed.
4. Stop engine and reconnect mass air flow sensor harness connector.
5. Make sure that DTC P0102 is displayed.
6. Erase the DTC memory. Refer to EC-841, "HOW TO ERASE EMISSION-RELATED DIAGNOSTIC INFORMATION" .
7. Make sure that DTC P0000 is displayed.
8. Run engine for at least 10 minutes at idle speed.
   Is the 1st trip DTC P0172 detected?
   Is it difficult to start engine?

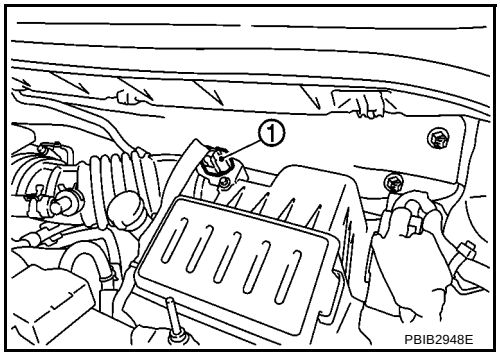

Yes or No

Yes >> Perform trouble diagnosis for DTC P0172. Refer to EC-1019, "DTC P0172 FUEL INJECTION SYSTEM FUNCTION" .

No >> GO TO 4.

4. CHECK HO2S1 CONNECTOR FOR WATER

1. Turn ignition switch OFF.
2. Disconnect heated oxygen sensor 1 harness connector (1).

– ⇦: Vehicle front

3. Check connectors for water.

Water should not exist.

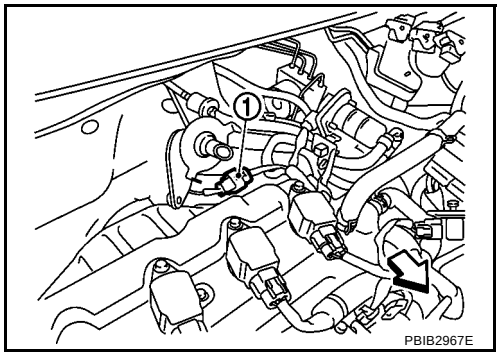

OK or NG

OK >> GO TO 5.

NG >> Repair or replace harness or connectors.

5. CHECK HEATED OXYGEN SENSOR 1 HEATER

Refer to EC-990, "Component Inspection" .

OK or NG

OK >> GO TO 6.
NG >> Replace heated oxygen sensor 1.

6. CHECK HEATED OXYGEN SENSOR 1

Refer to EC-975, "Component Inspection" .

OK or NG

OK >> GO TO 7.
NG >> Replace heated oxygen sensor 1.

7. CHECK INTERMITTENT INCIDENT

Refer to EC-917, "TROUBLE DIAGNOSIS FOR INTERMITTENT INCIDENT" .
For circuit, refer to EC-970, "Wiring Diagram" .

>> **INSPECTION END**

Component Inspection

BBS004G9

HEATED OXYGEN SENSOR 1

With CONSULT-II

1. Start engine and warm it up to normal operating temperature.
2. Select “MANU TRIG” and adjust “TRIGGER POINT” to 100% in “DATA MONITOR” mode with CONSULT-II.
3. Select “HO2S1 (B1)” and “HO2S1 MNTR (B1)”.
4. Hold engine speed at 2,000 rpm under no load during the following steps.
5. Touch “RECORD” on CONSULT-II screen.

DATA MONITOR	
MONITOR	NO DTC
ENG SPEED	XXX rpm
MAS A/F SE-B1	XXX V
COOLAN TEMP/S	XXX °C
HO2S1 (B1)	XXX V
HO2S1 MNTR (B1)	LEAN

SEF646Y

6. Check the following.
   - “HO2S1 MNTR (B1)” in “DATA MONITOR” mode changes from “RICH” to “LEAN” to “RICH” more than 5 times in 10 seconds.
     5 times (cycles) are counted as shown in the figure.
   - “HO2S1 (B1)” voltage goes above 0.6V at least once.
   - “HO2S1 (B1)” voltage goes below 0.3V at least once.
   - “HO2S1 (B1)” voltage never exceeds 1.0V.

cycle	1	2	3	4	5
HO2S1 MNTR (B1)	R-L-R-L-R-L-R-L-R-L-R				

R means HO2S1 MNTR (B1) indicates RICH
L means HO2S1 MNTR (B1) indicates LEAN

SEF217YA

Trigger	ENG SPEED	HO2S1 (B1)
	rpm	V
XXX	XXX	XXX
XXX	XXX	XXX
XXX	XXX	XXX
XXX	XXX	XXX
XXX	XXX	XXX
XXX	XXX	XXX
XXX	XXX	XXX
XXX	XXX	XXX
XXX	XXX	XXX
XXX	XXX	XXX
XXX	XXX	XXX
XXX	XXX	XXX

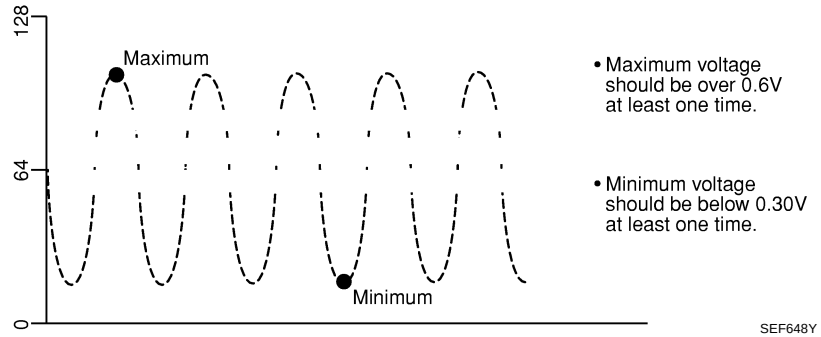

CAUTION:

- **Discard any heated oxygen sensor which has been dropped from a height of more than 0.5 m (19.7 in) onto a hard surface such as a concrete floor; use a new one.**
- **Before installing new oxygen sensor, clean exhaust system threads using Oxygen Sensor Thread Cleaner tool and approved anti-seize lubricant.**

Without CONSULT-II

1. Start engine and warm it up to normal operating temperature.
2. Set voltmeter probes between ECM terminal 49 (HO2S1 signal) and ground.
3. Check the following with engine speed held at 2,000 rpm constant under no load.
   - The voltage fluctuates between 0 to 0.3V and 0.6 to 1.0V more than 5 times within 10 seconds.
   - The maximum voltage is over 0.6V at least 1 time.
   - The minimum voltage is below 0.3V at least 1 time.
   - The voltage never exceeds 1.0V.

   1 time: 0 - 0.3V → 0.6 - 1.0V → 0 - 0.3V
   2 times: 0 - 0.3V → 0.6 - 1.0V → 0 - 0.3V → 0.6 - 1.0V → 0 - 0.3V

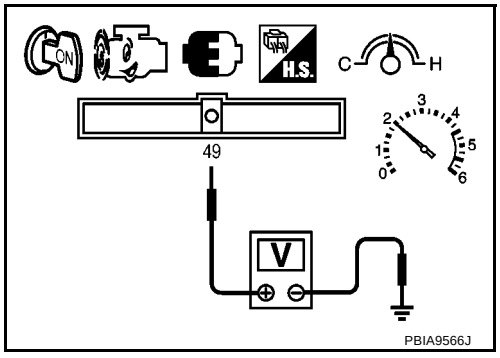

CAUTION:

- **Discard any heated oxygen sensor which has been dropped from a height of more than 0.5 m (19.7 in) onto a hard surface such as a concrete floor; use a new one.**
- **Before installing new oxygen sensor, clean exhaust system threads using Oxygen Sensor Thread Cleaner tool and approved anti-seize lubricant.**

Removal and Installation

BBS004GA

HEATED OXYGEN SENSOR 1

Refer to EM-124, "EXHAUST MANIFOLD" .

DTC P1146 HO2S2

PFP:226A0

Component Description

BBS004GB

The heated oxygen sensor 2, after three way catalyst (manifold), monitors the oxygen level in the exhaust gas.
Even if switching characteristics of the heated oxygen sensor 1 are shifted, the air-fuel ratio is controlled to stoichiometric, by the signal from the heated oxygen sensor 2.
This sensor is made of ceramic zirconia. The zirconia generates voltage from approximately 1V in richer conditions to 0V in leaner conditions.
Under normal conditions the heated oxygen sensor 2 is not used for engine control operation.

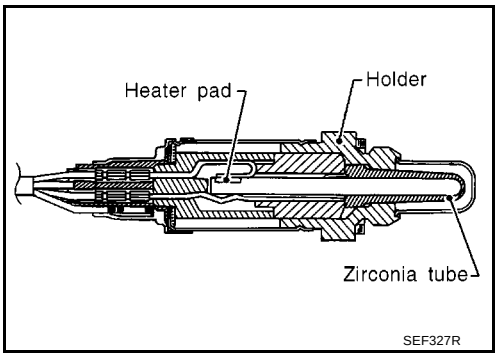

CONSULT-II Reference Value in Data Monitor Mode

BBS004GC

Specification data are reference values.

MONITOR ITEM	CONDITION	SPECIFICATION
HO2S2 (B1)	● Revving engine from idle to 3,000 rpm quickly after the following conditions are met. – Engine: After warming up – Keep the engine speed between 3,500 rpm and 4,000 rpm for 1 minute and idle for 1 minute under no load	0 - 0.3V ←→ Approx. 0.6 - 1.0V
HO2S2 MNTR (B1)		LEAN ←→ RICH

On Board Diagnosis Logic

BBS004GD

The heated oxygen sensor 2 has a much longer switching time between rich and lean than the heated oxygen sensor 1. The oxygen storage capacity of the three way catalyst (manifold) causes the longer switching time. To judge the malfunctions of heated oxygen sensor 2, ECM monitors whether the minimum voltage of sensor is sufficiently low during the various driving condition such as fuel-cut.

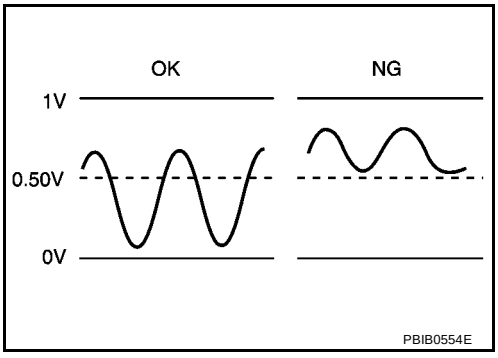

DTC No.	Trouble diagnosis name	DTC detecting condition	Possible cause
P1146 1146	Heated oxygen sensor 2 minimum voltage monitoring	The minimum voltage from the sensor is not reached to the specified voltage.	● Harness or connectors (The sensor circuit is open or shorted.) ● Heated oxygen sensor 2 ● Fuel pressure ● Fuel injector

DTC Confirmation Procedure

BBS004GE

CAUTION:

Always drive vehicle at a safe speed.

NOTE:

- **"COMPLETED" will appear on CONSULT-II screen when all tests "COND1", "COND2" and "COND3" are completed.**
- If DTC confirmation Procedure has been previously conducted, always turn ignition switch OFF and wait at least 10 seconds before conducting the next test.

TESTING CONDITION:

Never stop engine during this procedure. If the engine is stopped, retry procedure from step 2 in Procedure for COND1

WITH CONSULT-II

Procedure for COND1

For the best results, perform "DTC WORK SUPPORT" at a temperature of 0 to 30°C(32 to 86°F).

1. Start engine and warm it up to normal operating temperature.
2. Turn ignition switch OFF and wait at least 10 seconds.
3. Start engine and keep the engine speed between 3,500 and 4,000 rpm for at least 1 minute under no load.
4. Let engine idle 1 minute.
5. Select "HO2S2 (B1) P1146" of "HO2S2" in "DTC WORK SUPPORT" mode with CONSULT-II.
6. Touch "START".
7. Start engine and let it idle for at least 30 seconds.
8. Rev engine up to 2,000 rpm two or three times quickly under no load.
   If "COMPLETED" appears on CONSULT-II screen, go to step 2 in Procedure for COND3".
   If "COMPLETED" does not appear on CONSULT-II screen, go to the following step.
9. When the following conditions are met, "TESTING" will be displayed at "COND1" on the CONSULT-II screen. Maintain the conditions continuously until "TESTING" changes to "COMPLETED". (It will take approximately 60 seconds.)

ENG SPEED	1,000 - 3,600 rpm
B/FUEL SCHDL	More than 1.0 msec
COOLAN TEMP/S	70 - 119°C (158 - 246°F)
Shift lever	Suitable position

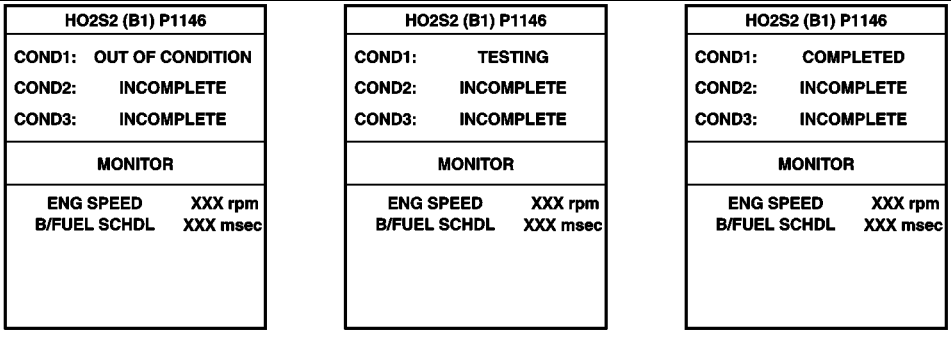

PBIB0555E

NOTE:

- **If "TESTING" is not displayed after 5 minutes, retry from step 2 in Procedure for COND1.**
- **If "COMPLETED" already appears at "COND2" on CONSULT-II screen before Procedure for COND2 is conducted, it is unnecessary to conduct step 1 in Procedure for COND2.**

Procedure for COND2

1. While driving, release accelerator pedal completed with “OD” OFF (A/T) from the above condition [step 9] until “INCOMPLETE” at “COND2” on CONSULT-II screen has turned to “COMPLETED” (It will take approximately 4 seconds.)

   NOTE:
   If “COMPLETE” already appears at “COND3” on CONSULT-II screen before Procedure for COND3 is conducted, it is unnecessary to conduct step 1 in Procedure for COND3.

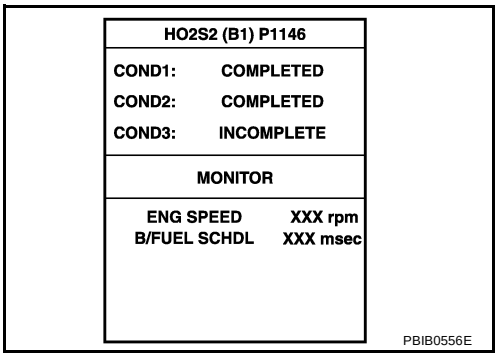

Procedure for COND3

1. Stop vehicle and let it idle until “INCOMPLETE” of “COND3” on CONSULT-II screen has turned to “COMPLETED”. (It will take a maximum of approximately 6 minutes.)
2. Make sure that “OK” is displayed after touching “SELF-DIAG RESULTS”.
   If “NG” is displayed, refer to EC-1117, "Diagnostic Procedure" .
   If “CAN NOT BE DIAGNOSED” is displayed, performed the following.

a. Turn ignition switch OFF and leave the vehicle in a cool place (soak the vehicle).
b. Turn ignition switch ON and select “COOLAN TEMP/S” in “DATA MONITOR” mode with CONSULT-II.
c. Start engine and warm it up while monitoring “COOLAN TEMP/S” indication on CONSULT-II.
d. When “COOLAN TEMP/S” indication reaches to 70°C(158°F), go to Procedure for COND1 step 3.

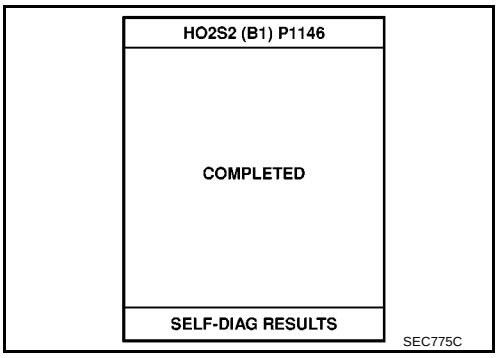

Overall Function Check

BBS004GF

Use this procedure to check the overall function of the heated oxygen sensor 2 circuit. During this check, a 1st trip DTC might not be confirmed.

WITH GST

1. Start engine and warm it up to the operating temperature.
2. Turn ignition switch OFF and wait at least 10 seconds.
3. Start engine and keep the engine speed between 3,500 and 4,000 rpm for at least 1 minute under no load.
4. Let engine idle for 1 minute.
5. Set voltmeter probes between ECM terminal 50 (HO2S2 signal) and ground.
6. Check the voltage when revving up to 4,000 rpm under no load at least 10 times.
   (Depress and release accelerator pedal as soon as possible.)
   The voltage should be below 0.50V at least once during this procedure.
   If the voltage can be confirmed in step 6, step 7 is not necessary.
7. Keep vehicle at idling for 10 minutes, then check the voltage. Or check the voltage when coasting from 80 km/h (50 MPH) in D position with “OD” OFF (A/T), 3rd gear position (M/T).
   The voltage should be below 0.50V at least once during this procedure.
8. If NG, go to EC-1117, "Diagnostic Procedure" .

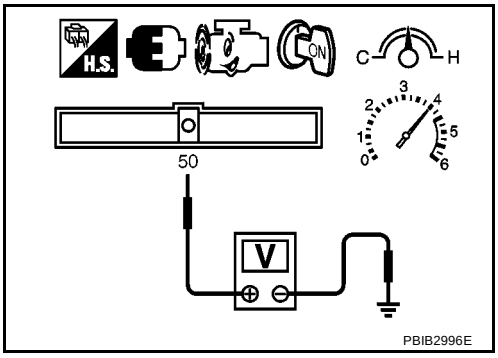

Wiring Diagram

BBS004GG

EC-HO2S2-01

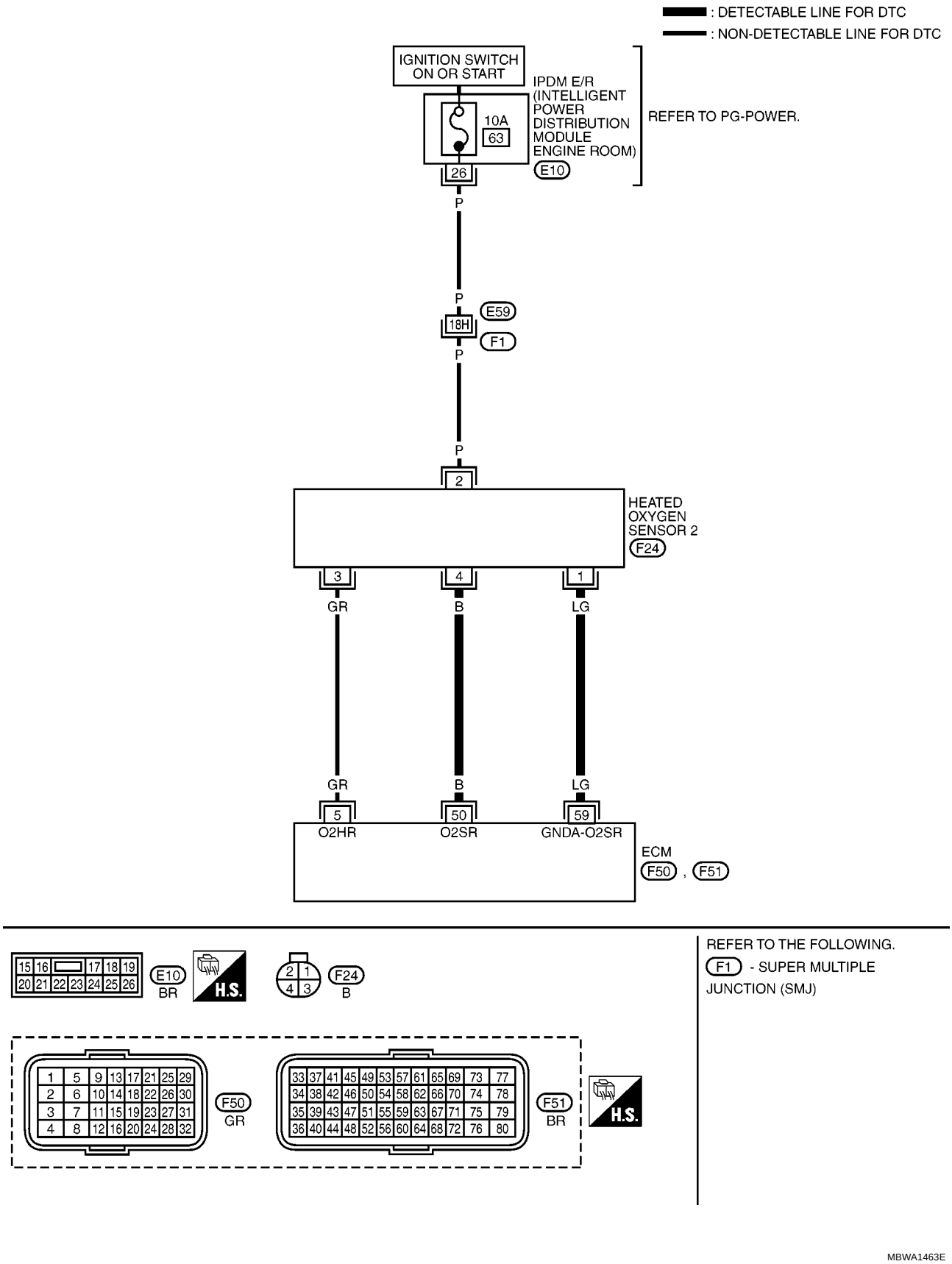

MBWA1463E

Specification data are reference values and are measured between each terminal and ground.
Pulse signal is measured by CONSULT-II.

CAUTION:
Do not use ECM ground terminals when measuring input/output voltage. Doing so may result in damage to the ECM's transistor. Use a ground other than ECM terminals, such as the ground.

TERMINAL NO.	WIRE COLOR	ITEM	CONDITION	DATA (DC Voltage)
5	GR	Heated oxygen sensor 2 heater	**[Engine is running]** ● Below 3,600 rpm after the following conditions are met. – Engine: After warming up – Keeping the engine speed between 3,500 and 4,000 rpm for 1 minute and at idle for 1 minute under no load	Approximately 10V★ 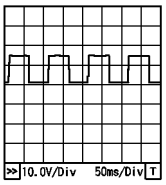 PBIA8148J
			[Ignition switch: ON] ● Engine stopped **[Engine is running]** ● Engine speed: Above 3,600 rpm	BATTERY VOLTAGE (11 - 14V)
50	B	Heated oxygen sensor 2	**[Engine is running]** ● Revving engine from idle to 3,000 rpm quickly after the following conditions are met. – Engine: After warming up – Keeping the engine speed between 3,500 and 4,000 rpm for 1 minute and at idle for 1 minute under no load.	0 - Approximately 1.0V
59	LG	Sensor ground (Heated oxygen sensor 2)	**[Engine is running]** ● **Warm-up condition** ● Idle speed	Approximately 0V

★: Average voltage for pulse signal (Actual pulse signal can be confirmed by oscilloscope.)

Diagnostic Procedure

BBS004GH

1. CHECK GROUND CONNECTIONS

1. Turn ignition switch OFF.
2. Loosen and retighten ground screws on the body.
   Refer to EC-924, "Ground Inspection" .

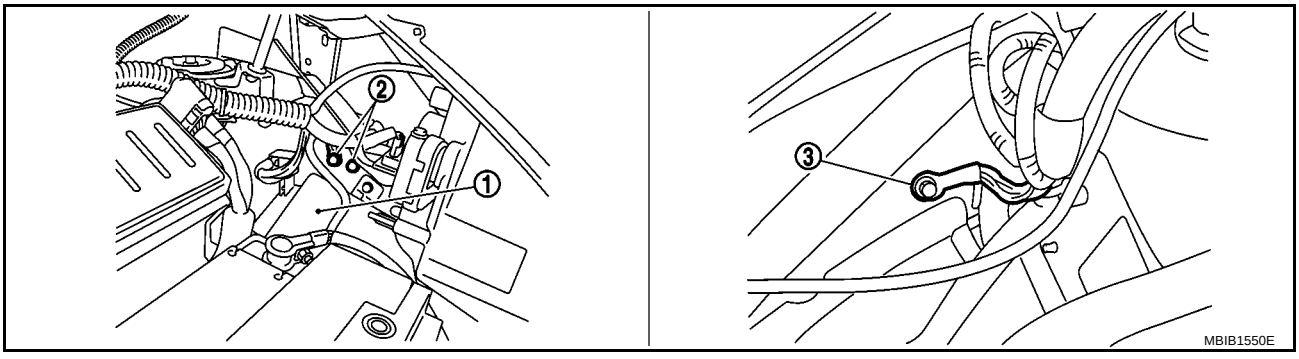

1. IPDM E/R
2. Body ground
3. Body ground

OK or NG

OK >> GO TO 2.
NG >> Repair or replace ground connections.

2. CLEAR THE SELF-LEARNING DATA

With CONSULT-II

1. Start engine and warm it up to normal operating temperature.
2. Select “SELF-LEARNING CONT” in “WORK SUPPORT” mode with CONSULT-II.
3. Clear the self-learning control coefficient by touching “CLEAR”.
4. Run engine for at least 10 minutes at idle speed.
   Is the 1st trip DTC P0172 detected?
   Is it difficult to start engine?

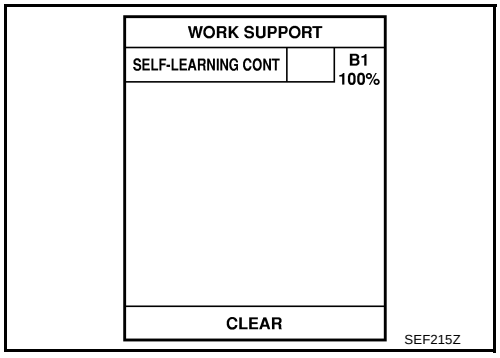

Without CONSULT-II

1. Start engine and warm it up to normal operating temperature.
2. Turn ignition switch OFF.
3. Disconnect mass air flow sensor (1) harness connector, and restart and run engine for at least 5 seconds at idle speed.
4. Stop engine and reconnect mass air flow sensor harness connector.
5. Make sure that DTC P0102 is displayed.
6. Erase the DTC memory. Refer to EC-841, "HOW TO ERASE EMISSION-RELATED DIAGNOSTIC INFORMATION" .
7. Make sure that DTC P0000 is displayed.
8. Run engine for at least 10 minutes at idle speed.
   Is the 1st trip DTC P0172 detected?
   Is it difficult to start engine?

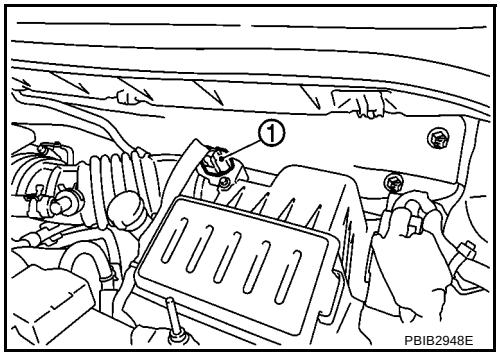

Yes or No

Yes >> Perform trouble diagnosis for DTC P0172. Refer to EC-1019, "DTC P0172 FUEL INJECTION SYSTEM FUNCTION" .

No >> GO TO 3.

3. CHECK HO2S2 GROUND CIRCUIT FOR OPEN AND SHORT

1. Turn ignition switch OFF.
2. Disconnect heated oxygen sensor 2 harness connector (2).
   – Heated oxygen sensor 2 (1)
3. Disconnect ECM harness connector.
4. Check harness continuity between HO2S2 terminal 1 and ECM terminal 59.
   Refer to Wiring Diagram.

   Continuity should exist.

5. Also check harness for short to ground and short to power.

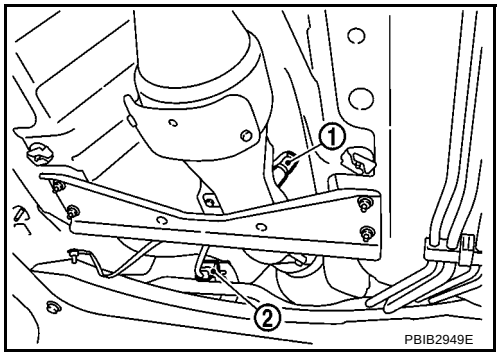

OK or NG

OK >> GO TO 4.

NG >> Repair open circuit or short to ground or short to power in harness or connectors.

4. CHECK HO2S2 INPUT SIGNAL CIRCUIT FOR OPEN AND SHORT

1. Check harness continuity between HO2S2 terminal 4 and ECM terminal 50.
   Refer to Wiring Diagram.

   Continuity should exist.

2. Check harness continuity between ECM terminal 50 or HO2S2 terminal 4 and ground.
   Refer to Wiring Diagram.

   Continuity should not exist.

3. Also check harness for short to power.

OK or NG

OK >> GO TO 5.
NG >> Repair open circuit or short to ground or short to power in harness or connectors.

5. CHECK HEATED OXYGEN SENSOR 2

Refer to EC-1119, "Component Inspection" .

OK or NG

OK >> GO TO 6.
NG >> Replace heated oxygen sensor 2.

6. CHECK INTERMITTENT INCIDENT

Refer to EC-917, "TROUBLE DIAGNOSIS FOR INTERMITTENT INCIDENT" .

>> **INSPECTION END**

Component Inspection

BBS004GI

HEATED OXYGEN SENSOR 2

With CONSULT-II

1. Start engine and warm it up to the normal operating temperature.
2. Turn ignition switch OFF and wait at least 10 seconds.
3. Start engine and keep the engine speed between 3,500 and 4,000 rpm for at least 1 minute under no load.
4. Let engine idle for 1 minute.
5. Select “FUEL INJECTION” in “ACTIVE TEST” mode, and select “HO2S2 (B1)” as the monitor item with CONSULT-II.

ACTIVE TEST	
FUEL INJECTION	25 %
MONITOR	
ENG SPEED	XXX rpm
HO2S1 (B1)	XXX V
HO2S2 (B1)	XXX V
HO2S1 MNTR (B1)	RICH
HO2S2 MNTR (B1)	RICH

SEF662Y

6. Check “HO2S2 (B1)” at idle speed when adjusting “FUEL INJECTION” to ±25%.

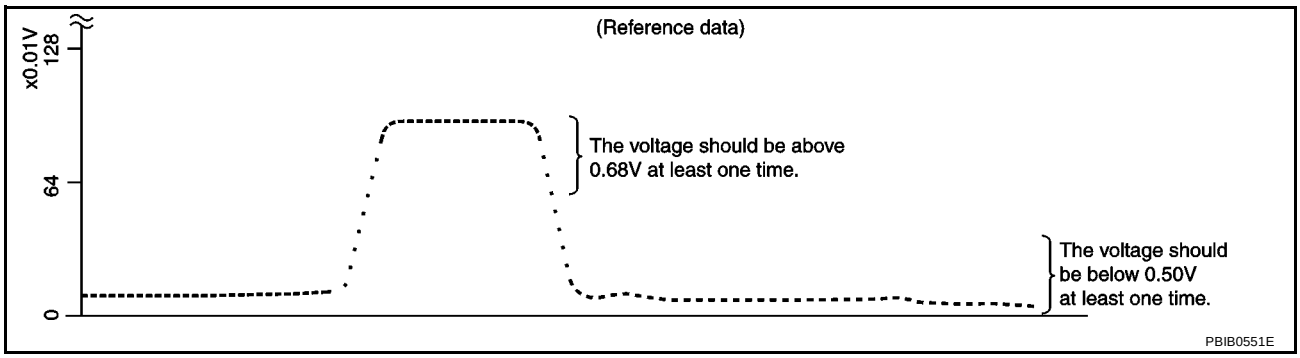

“HO2S2 (B1)” should be above 0.68V at least once when the “FUEL INJECTION” is +25%.
“HO2S2 (B1)” should be below 0.50V at least once when the “FUEL INJECTION” is –25%.

CAUTION:

- **Discard any heated oxygen sensor which has been dropped from a height of more than 0.5 m (19.7 in) onto a hard surface such as a concrete floor; use a new one.**
- **Before installing new oxygen sensor, clean exhaust system threads using Oxygen Sensor Thread Cleaner tool and approved anti-seize lubricant.**

Without CONSULT-II

1. Start engine and warm it up to the normal operating temperature.
2. Turn ignition switch OFF and wait at least 10 seconds.
3. Start engine and keep the engine speed between 3,500 and 4,000 rpm for at least 1 minute under no load.
4. Let engine idle for 1 minute.
5. Set voltmeter probes between ECM terminal 50 (HO2S2 signal) and ground.
6. Check the voltage when revving up to 4,000 rpm under no load at least 10 times.
   (Depress and release accelerator pedal as soon as possible.)
   The voltage should be above 0.68V at least once during this procedure.
   If the voltage is above 0.68V at step 6, step 7 is not necessary.
7. Keep vehicle at idling for 10 minutes, then check voltage. Or check the voltage when coasting from 80 km/h (50 MPH) in D position with “OD” OFF (A/T), 3rd gear position (M/T).
   The voltage should be below 0.50V at least once during this procedure.

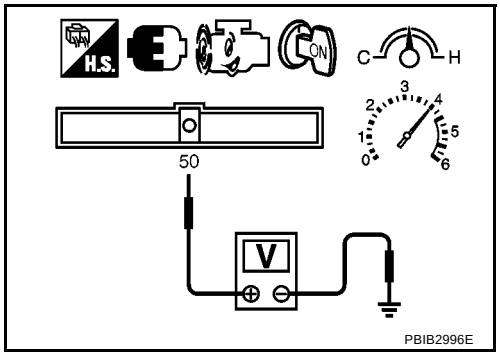

8. If NG, replace heated oxygen sensor 2.

CAUTION:

- **Discard any heated oxygen sensor which has been dropped from a height of more than 0.5 m (19.7 in) onto a hard surface such as a concrete floor; use a new one.**
- **Before installing new oxygen sensor, clean exhaust system threads using Oxygen Sensor Thread Cleaner tool and approved anti-seize lubricant.**

Removal and Installation

BBS004GJ

HEATED OXYGEN SENSOR 2

Refer to EX-3, "EXHAUST SYSTEM" .

DTC P1147 HO2S2

PFP:226A0

Component Description

BBS004GK

The heated oxygen sensor 2, after three way catalyst (manifold), monitors the oxygen level in the exhaust gas.
Even if switching characteristics of the heated oxygen sensor 1 are shifted, the air-fuel ratio is controlled to stoichiometric, by the signal from the heated oxygen sensor 2.
This sensor is made of ceramic zirconia. The zirconia generates voltage from approximately 1V in richer conditions to 0V in leaner conditions.
Under normal conditions the heated oxygen sensor 2 is not used for engine control operation.

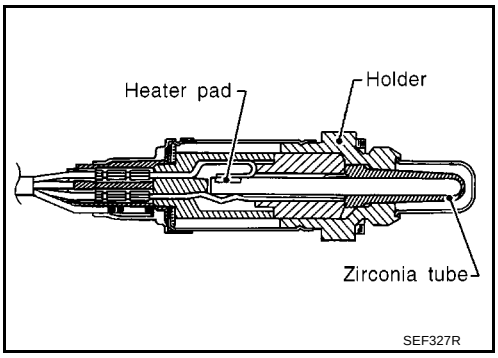

CONSULT-II Reference Value in Data Monitor Mode

BBS004GL

Specification data are reference values.

MONITOR ITEM	CONDITION	SPECIFICATION
HO2S2 (B1)	● Revving engine from idle to 3,000 rpm quickly after the following conditions are met. – Engine: After warming up – Keep the engine speed between 3,500 rpm and 4,000 rpm for 1 minute and idle for 1 minute under no load	0 - 0.3V ←→ Approx. 0.6 - 1.0V
HO2S2 MNTR (B1)		LEAN ←→ RICH

On Board Diagnosis Logic

BBS004GM

The heated oxygen sensor 2 has a much longer switching time between rich and lean than the heated oxygen sensor 1. The oxygen storage capacity before the three way catalyst (manifold) causes the longer switching time. To judge the malfunctions of heated oxygen sensor 2, ECM monitors whether the maximum voltage of the sensor is sufficiently high during the various driving condition such as fuel-cut.

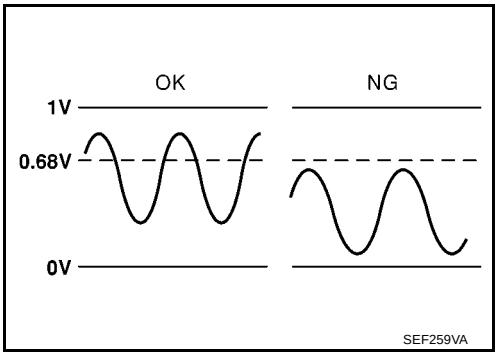

DTC No.	Trouble diagnosis name	DTC detecting condition	Possible cause
P1147 1147	Heated oxygen sensor 2 maximum voltage monitoring	The maximum voltage from the sensor is not reached to the specified voltage.	● Harness or connectors (The sensor circuit open or shorted.) ● Heated oxygen sensor 2 ● Fuel pressure ● Fuel injector ● Intake air leaks

DTC Confirmation Procedure

BBS004GN

CAUTION:
Always drive vehicle at a safe speed.

NOTE:
- **"COMPLETED" will appear on CONSULT-II screen when all tests "COND1", "COND2" and "COND3" are completed.**
- If DTC confirmation Procedure has been previously conducted, always turn ignition switch OFF and wait at least 10 seconds before conducting the next test.

TESTING CONDITION:
Never stop engine during this procedure. If the engine is stopped, retry procedure from step 2 in "Procedure for COND1"

WITH CONSULT-II

Procedure for COND1

For the best results, perform "DTC WORK SUPPORT" at a temperature of 0 to 30°C(32 to 86°F).

1. Start engine and warm it up to normal operating temperature.
2. Turn ignition switch OFF and wait at least 10 seconds.
3. Start engine and keep the engine speed between 3,500 and 4,000 rpm for at least 1 minute under no load.
4. Let engine idle 1 minute.
5. Select "HO2S2 (B1) P1147" of "HO2S2" in "DTC WORK SUPPORT" mode with CONSULT-II.
6. Touch "START".
7. Start engine and let it idle for at least 30 seconds.
8. Rev engine up to 2,000 rpm two or three times quickly under no load.
   If "COMPLETED" appears on CONSULT-II screen, go to step 2 in "Procedure for COND3".
   If "COMPLETED" does not appear on CONSULT-II screen, go to the following step.
9. When the following conditions are met, "TESTING" will be displayed at COND1" on the CONSULT-II screen. Maintain the conditions continuously until "TESTING" changes to "COMPLETED". (It will take approximately 60 seconds.)

ENG SPEED	1,000 - 3,600 rpm
B/FUEL SCHDL	More than 1.0 msec
COOLAN TEMP/S	70 - 119°C (158 - 246°F)
Shift lever	Suitable position

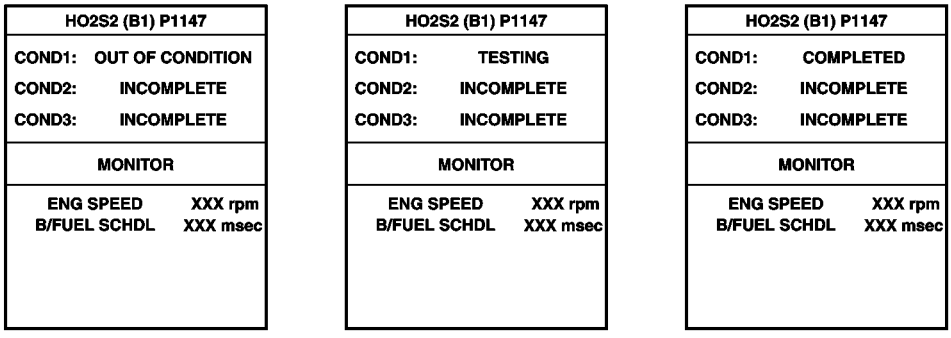

PBIB0557E

NOTE:
- **If "TESTING" is not displayed after 5 minutes, retry from step 2 in Procedure for COND1.**
- **If "COMPLETED" already appears at "COND2" on CONSULT-II screen before Procedure for COND2 is conducted, it is unnecessary to conduct step 1 in Procedure for COND2.**

Procedure for COND2

1. While driving, release accelerator pedal completed with “OD” OFF (A/T) from the above condition [step 9] until “INCOMPLETE” at “COND2” on CONSULT-II screen has turned to “COMPLETED” (It will take approximately 4 seconds.)

   NOTE:
   If “COMPLETE” already appears at “COND3” on CONSULT-II screen before Procedure for COND3 is conducted, it is unnecessary to conduct step 1 in “Procedure for COND3”.

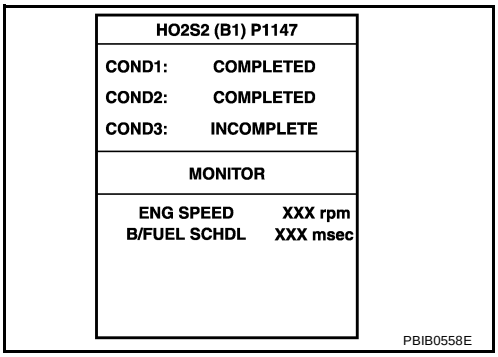

Procedure for COND3

1. Stop vehicle and let it idle until “INCOMPLETE” of “COND3” on CONSULT-II screen has turned to “COMPLETED”. (It will take a maximum of approximately 6 minutes.)
2. Make sure that “OK” is displayed after touching “SELF-DIAG RESULTS”.
   If “NG” is displayed, refer to EC-1125, "Diagnostic Procedure" .
   If “CAN NOT BE DIAGNOSED” is displayed, perform the following.

a. Turn ignition switch OFF and leave the vehicle in a cool place (soak the vehicle).
b. Turn ignition switch ON and select “COOLAN TEMP/S” in “DATA MONITOR” mode with CONSULT-II.
c. Start engine and warm it up while monitoring “COOLAN TEMP/S” indication on CONSULT-II.
d. When “COOLAN TEMP/S” indication reaches to 70°C(158°F), go to Procedure for COND1 step 3.

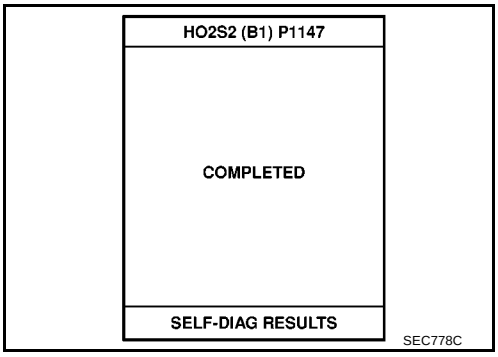

Overall Function Check

BBS004GO

Use this procedure to check the overall function of the heated oxygen sensor 2 circuit. During this check, a 1st trip DTC might not be confirmed.

WITH GST

1. Start engine and warm it up to the normal operating temperature.
2. Turn ignition switch OFF and wait at least 10 seconds.
3. Start engine and keep the engine speed between 3,500 and 4,000 rpm for at least 1 minute under no load.
4. Let engine idle for 1 minute.
5. Set voltmeter probes between ECM terminal 50 (HO2S2 signal) and ground.
6. Check the voltage when revving up to 4,000 rpm under no load at least 10 times.
   (Depress and release accelerator pedal as soon as possible.)
   The voltage should be above 0.68V at least once during this procedure.
   If the voltage can be confirmed in step 6, step 7 is not necessary.
7. Keep vehicle idling for 10 minutes, then check the voltage. Or check the voltage when coasting from 80 km/h (50 MPH) in D position with “OD” OFF (A/T), 3rd gear position (M/T).
   The voltage should be above 0.68V at least once during this procedure.
8. If NG, go to EC-1125, "Diagnostic Procedure" .

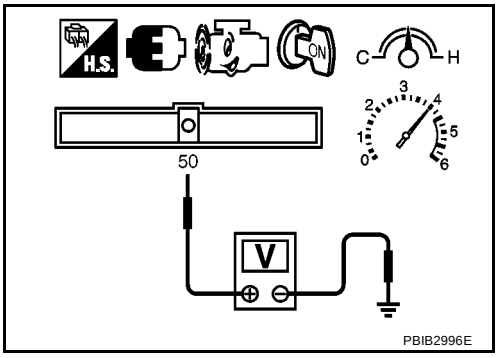

Wiring Diagram

BBS004GP

EC-HO2S2-01

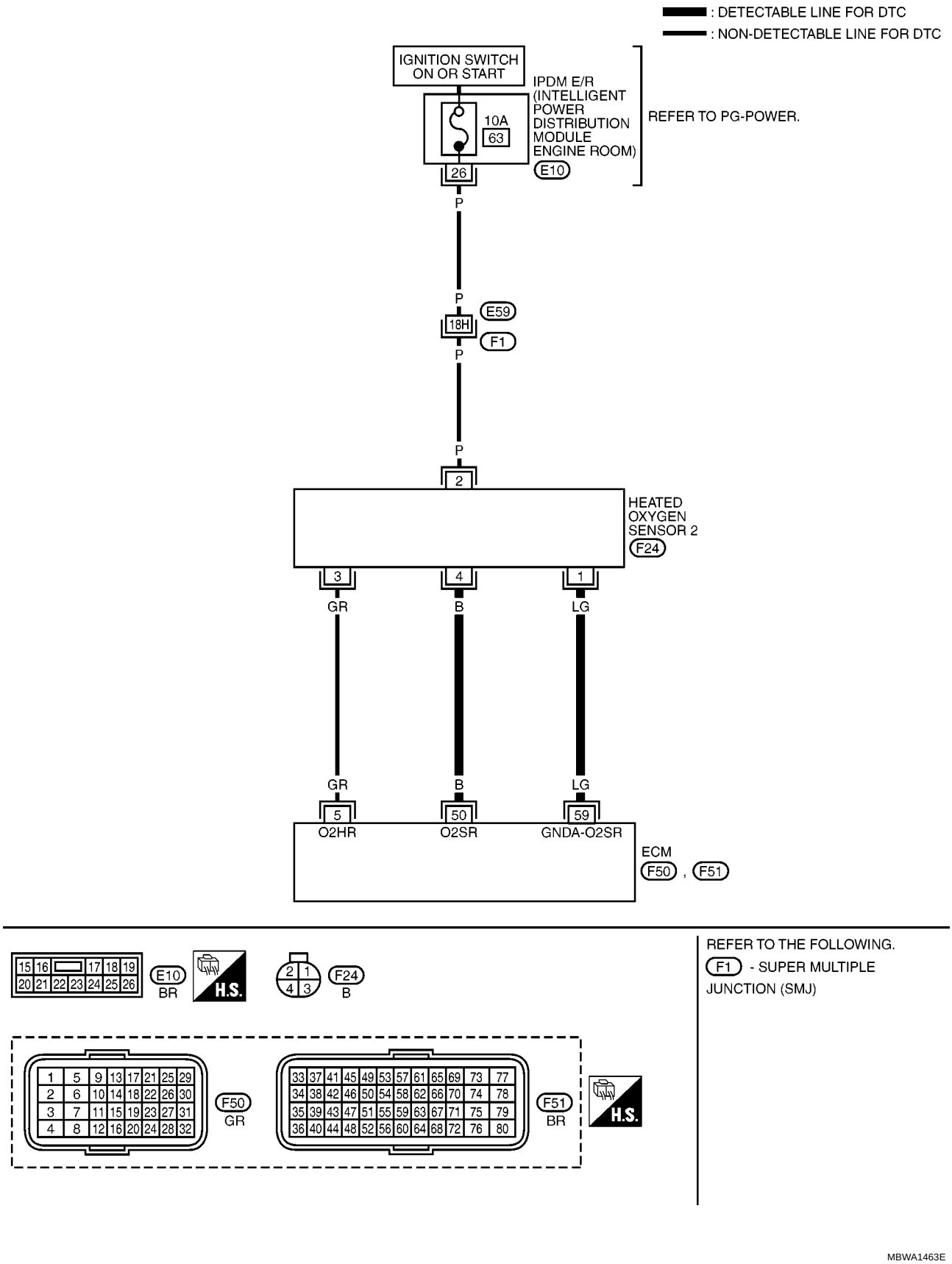

Specification data are reference values and are measured between each terminal and ground.
Pulse signal is measured by CONSULT-II.

CAUTION:
Do not use ECM ground terminals when measuring input/output voltage. Doing so may result in damage to the ECM's transistor. Use a ground other than ECM terminals, such as the ground.

TERMINAL NO.	WIRE COLOR	ITEM	CONDITION	DATA (DC Voltage)
5	GR	Heated oxygen sensor 2 heater	**[Engine is running]** ● Below 3,600 rpm after the following conditions are met. – Engine: After warming up – Keeping the engine speed between 3,500 and 4,000 rpm for 1 minute and at idle for 1 minute under no load	Approximately 10V★ 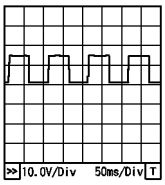 PBIA8148J
			[Ignition switch: ON] ● Engine stopped **[Engine is running]** ● Engine speed: Above 3,600 rpm	BATTERY VOLTAGE (11 - 14V)
50	B	Heated oxygen sensor 2	**[Engine is running]** ● Revving engine from idle to 3,000 rpm quickly after the following conditions are met. – Engine: After warming up – Keeping the engine speed between 3,500 and 4,000 rpm for 1 minute and at idle for 1 minute under no load.	0 - Approximately 1.0V
59	LG	Sensor ground (Heated oxygen sensor 2)	**[Engine is running]** ● **Warm-up condition** ● Idle speed	Approximately 0V

★: Average voltage for pulse signal (Actual pulse signal can be confirmed by oscilloscope.)

Diagnostic Procedure

BBS004GQ

1. CHECK GROUND CONNECTIONS

1. Turn ignition switch OFF.
2. Loosen and retighten ground screws on the body.
   Refer to EC-924, "Ground Inspection" .

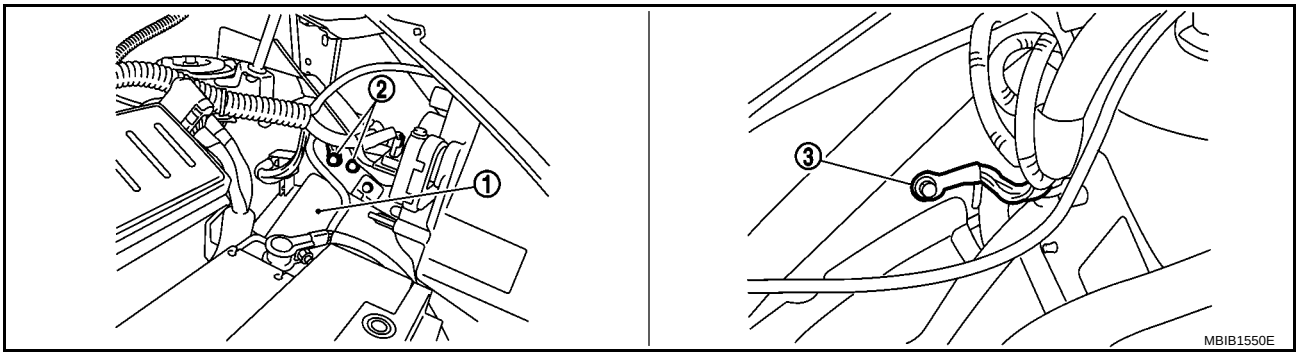

1. IPDM E/R
2. Body ground
3. Body ground

OK or NG

OK >> GO TO 2.
NG >> Repair or replace ground connections.

2. CLEAR THE SELF-LEARNING DATA

With CONSULT-II

1. Start engine and warm it up to normal operating temperature.
2. Select “SELF-LEARNING CONT” in “WORK SUPPORT” mode with CONSULT-II.
3. Clear the self-learning control coefficient by touching “CLEAR”.
4. Run engine for at least 10 minutes at idle speed.
   Is the 1st trip DTC P0171 detected?
   Is it difficult to start engine?

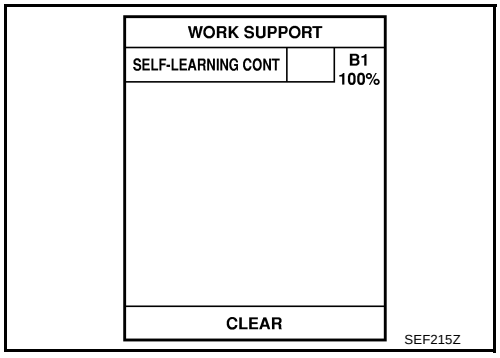

Without CONSULT-II

1. Start engine and warm it up to normal operating temperature.
2. Turn ignition switch OFF.
3. Disconnect mass air flow sensor (1) harness connector, and restart and run engine for at least 5 seconds at idle speed.
4. Stop engine and reconnect mass air flow sensor harness connector.
5. Make sure that DTC P0102 is displayed.
6. Erase the DTC memory. Refer to EC-841, "HOW TO ERASE EMISSION-RELATED DIAGNOSTIC INFORMATION" .
7. Make sure that DTC P0000 is displayed.
8. Run engine for at least 10 minutes at idle speed.
   Is the 1st trip DTC P0171 detected?
   Is it difficult to start engine?

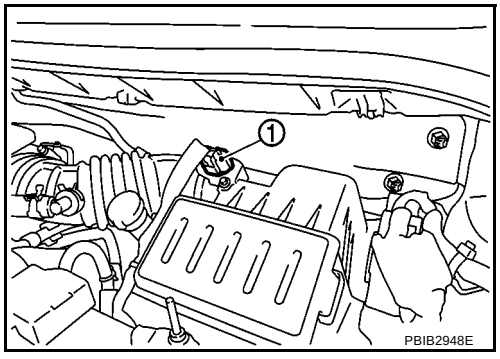

Yes or No

Yes >> Perform trouble diagnosis for DTC P0171. Refer to EC-1012, "DTC P0171 FUEL INJECTION SYSTEM FUNCTION" .

No >> GO TO 3.

3. CHECK HO2S2 GROUND CIRCUIT FOR OPEN AND SHORT

1. Turn ignition switch OFF.
2. Disconnect heated oxygen sensor 2 harness connector (2).
   – Heated oxygen sensor 2 (1)
3. Disconnect ECM harness connector.
4. Check harness continuity between HO2S2 terminal 1 and ECM terminal 59.
   Refer to Wiring Diagram.

   Continuity should exist.

5. Also check harness for short to ground and short to power.

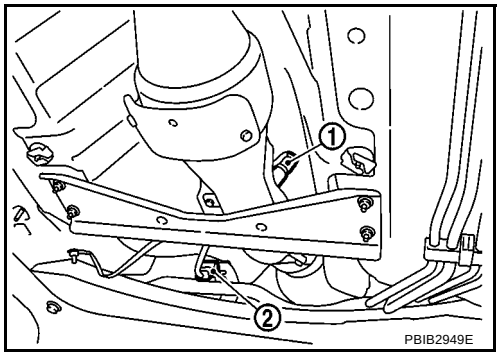

OK or NG

OK >> GO TO 4.

NG >> Repair open circuit or short to ground or short to power in harness or connectors.

4. CHECK HO2S2 INPUT SIGNAL CIRCUIT FOR OPEN AND SHORT

1. Check harness continuity between HO2S2 terminal 4 and ECM terminal 50.
   Refer to Wiring Diagram.

   Continuity should exist.

2. Check harness continuity between ECM terminal 50 or HO2S2 terminal 4 and ground.
   Refer to Wiring Diagram.

   Continuity should not exist.

3. Also check harness for short to power.

OK or NG

OK >> GO TO 5.
NG >> Repair open circuit or short to ground or short to power in harness or connectors.

5. CHECK HEATED OXYGEN SENSOR 2

Refer to EC-1127, "Component Inspection" .

OK or NG

OK >> GO TO 6.
NG >> Replace heated oxygen sensor 2.

6. CHECK INTERMITTENT INCIDENT

Refer to EC-917, "TROUBLE DIAGNOSIS FOR INTERMITTENT INCIDENT" .

>> **INSPECTION END**

Component Inspection

BBS004GR

HEATED OXYGEN SENSOR 2

With CONSULT-II

1. Start engine and warm it up to the normal operating temperature.
2. Turn ignition switch OFF and wait at least 10 seconds.
3. Start engine and keep the engine speed between 3,500 and 4,000 rpm for at least 1 minute under no load.
4. Let engine idle for 1 minute.
5. Select “FUEL INJECTION” in “ACTIVE TEST” mode, and select “HO2S2 (B1)” as the monitor item with CONSULT-II.

ACTIVE TEST	
FUEL INJECTION	25 %
MONITOR	
ENG SPEED	XXX rpm
HO2S1 (B1)	XXX V
HO2S2 (B1)	XXX V
HO2S1 MNTR (B1)	RICH
HO2S2 MNTR (B1)	RICH

SEF662Y

6. Check “HO2S2 (B1)” at idle speed when adjusting “FUEL INJECTION” to ±25%.

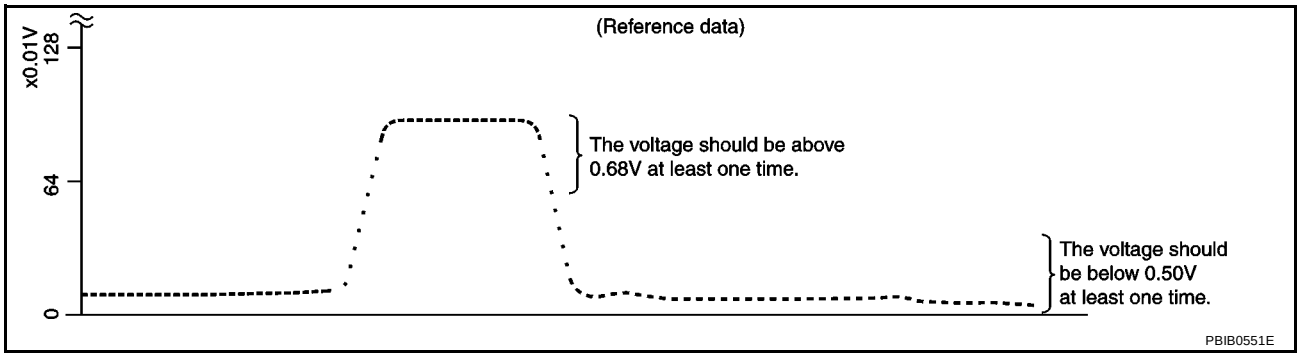

“HO2S2 (B1)” should be above 0.68V at least once when the “FUEL INJECTION” is +25%.
“HO2S2 (B1)” should be below 0.50V at least once when the “FUEL INJECTION” is –25%.

CAUTION:

- **Discard any heated oxygen sensor which has been dropped from a height of more than 0.5 m (19.7 in) onto a hard surface such as a concrete floor; use a new one.**
- **Before installing new oxygen sensor, clean exhaust system threads using Oxygen Sensor Thread Cleaner tool and approved anti-seize lubricant.**

Without CONSULT-II

1. Start engine and warm it up to the normal operating temperature.
2. Turn ignition switch OFF and wait at least 10 seconds.
3. Start engine and keep the engine speed between 3,500 and 4,000 rpm for at least 1 minute under no load.
4. Let engine idle for 1 minute.
5. Set voltmeter probes between ECM terminal 50 (HO2S2 signal) and ground.
6. Check the voltage when revving up to 4,000 rpm under no load at least 10 times.
   (Depress and release accelerator pedal as soon as possible.)
   The voltage should be above 0.68V at least once during this procedure.
   If the voltage is above 0.68V at step 6, step 7 is not necessary.
7. Keep vehicle idling for 10 minutes, then check voltage. Or check the voltage when coasting from 80 km/h (50 MPH) in D position with “OD” OFF (A/T), 3rd gear position (M/T).
   The voltage should be below 0.50V at least once during this procedure.

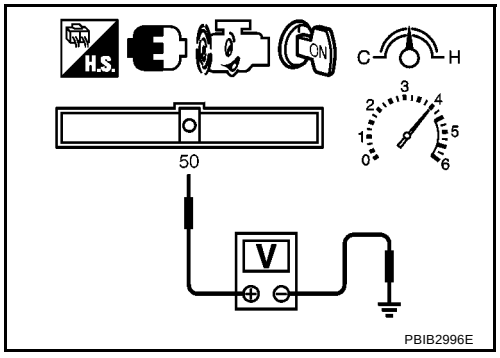

8. If NG, replace heated oxygen sensor 2.

CAUTION:

- **Discard any heated oxygen sensor which has been dropped from a height of more than 0.5 m (19.7 in) onto a hard surface such as a concrete floor; use a new one.**
- **Before installing new oxygen sensor, clean exhaust system threads using Oxygen Sensor Thread Cleaner tool and approved anti-seize lubricant.**

Removal and Installation

BBS004GS

HEATED OXYGEN SENSOR 2

Refer to EX-3, "EXHAUST SYSTEM" .

DTC P1212 TCS COMMUNICATION LINE

PFP:47850

Description

BBS004GX

NOTE:

- **If DTC P1212 is displayed with DTC U1000 or U1001, first perform the trouble diagnosis for DTC U1000, U1001. Refer to EC-925, "DTC U1000, U1001 CAN COMMUNICATION LINE" .**
- **If DTC P1212 is displayed with DTC U1010, first perform the trouble diagnosis for DTC U1010. Refer to EC-928, "DTC U1010 CAN COMMUNICATION" .**

This CAN communication line is used to control the smooth engine operation during the TCS operation. Pulse signals are exchanged between ECM and “ABS actuator and electric unit (control unit)”.
Be sure to erase the malfunction information such as DTC not only for “ABS actuator and electric unit (control unit)” but also for ECM after TCS related repair.

On Board Diagnosis Logic

BBS004GY

The MI will not light up for this self-diagnosis.
Freeze frame data is not stored in the ECM for this self-diagnosis.

DTC No.	Trouble diagnosis name	DTC detecting condition	Possible cause
P1212 1212	TCS communication line	ECM can not receive the information from “ABS actuator and electric unit (control unit)” continuously.	● Harness or connectors (The CAN communication line is open or shorted.) ● ABS actuator and electric unit (control unit) ● Dead (Weak) battery

DTC Confirmation Procedure

BBS004GZ

TESTING CONDITION:
Before performing the following procedure, confirm that battery voltage is more than 10.5V at idle.

WITH CONSULT-II

1. Turn ignition switch ON.
2. Select “DATA MONITOR” mode with CONSULT-II.
3. Start engine and let it idle for at least 10 seconds.
4. If 1st trip DTC is detected, go to EC-1129, "Diagnostic Procedure" .

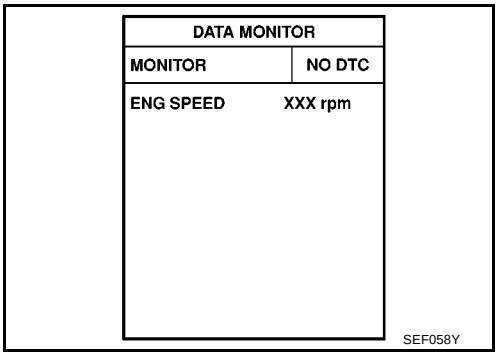

WITH GST

Follow the procedure “WITH CONSULT-II” above.

Diagnostic Procedure

BBS004H0

BRC-49, "TROUBLE DIAGNOSIS"

DTC P1217 ENGINE OVER TEMPERATURE

PFP:00000

System Description

BBS004V3

SYSTEM DESCRIPTION

NOTE:

- **If DTC P1217 is displayed with DTC U1000 or U1001, first perform the trouble diagnosis for DTC U1000, U1001. Refer to EC-925, "DTC U1000, U1001 CAN COMMUNICATION LINE" .**
- **If DTC P1217 is displayed with DTC U1010, first perform the trouble diagnosis for DTC U1010. Refer to EC-928, "DTC U1010 CAN COMMUNICATION" .**

Cooling Fan Control

Sensor	Input Signal to ECM	ECM function	Actuator
Crankshaft position sensor (POS) Camshaft position sensor (PHASE)	Engine speed*1	Cooling fan control	IPDM E/R (Cooling fan relays)
Battery	Battery voltage*1		
Wheel sensor	Vehicle speed*2		
Engine coolant temperature sensor	Engine coolant temperature		
Air conditioner switch*3	Air conditioner ON signal*2		
Refrigerant pressure sensor*3	Refrigerant pressure		

*1: The ECM determines the start signal status by the signals of engine speed and battery voltage.
*2: This signal is sent to ECM through CAN communication line.
*3: Models with air conditioner

The ECM controls the cooling fan corresponding to the vehicle speed, engine coolant temperature, refrigerant pressure, and air conditioner ON signal. The control system has 3-step control [HIGH/LOW/OFF] (Models with A/C) or 2-step control [ON/OFF] (Models without A/C).

Cooling Fan Operation

Models with A/C

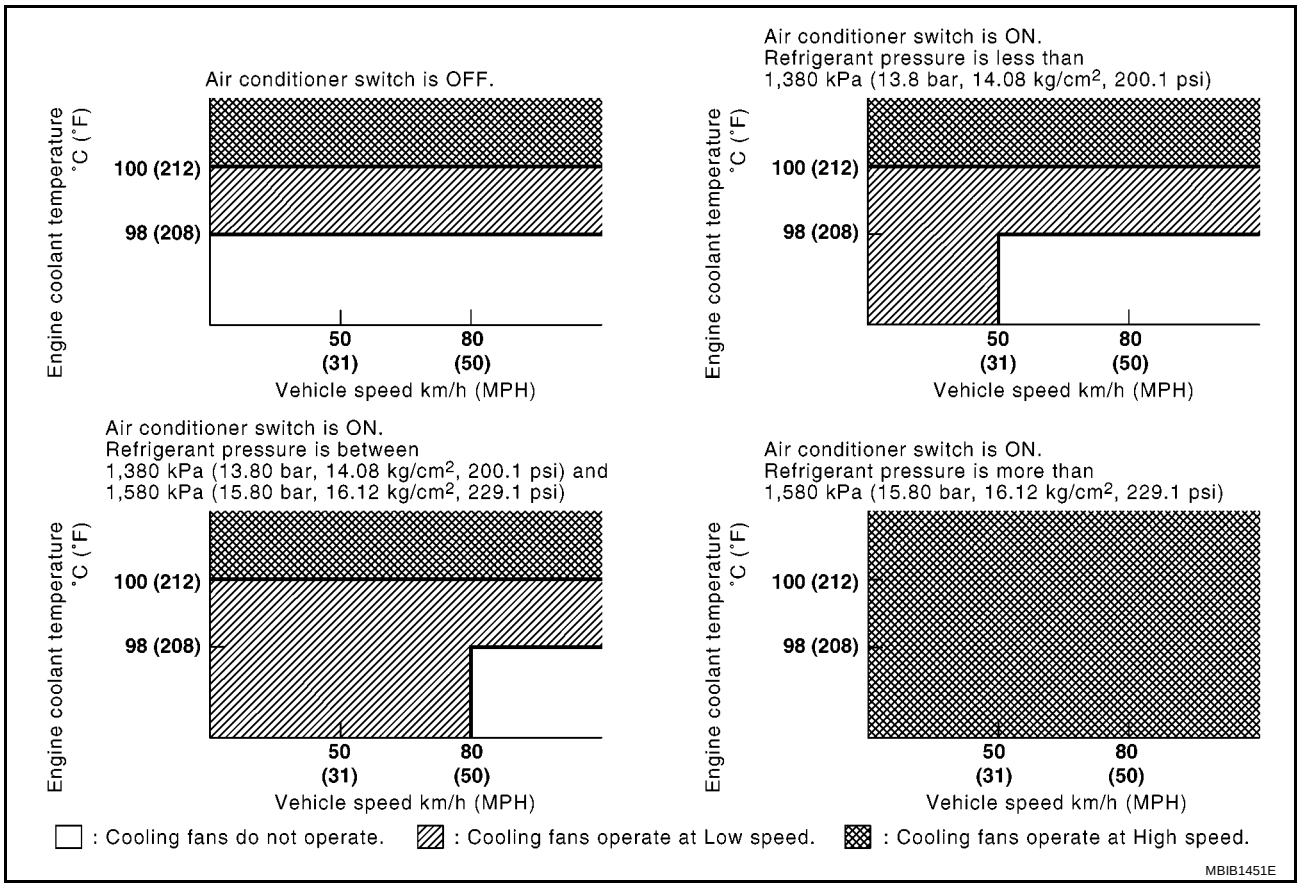

Models without A/C

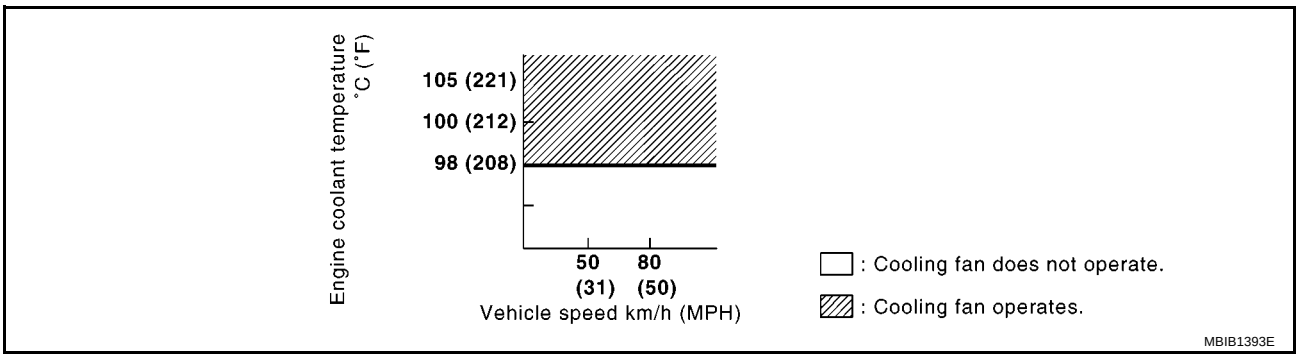

Cooling Fan Relay Operation

The ECM controls cooling fan relays in the IPDM E/R through CAN communication line.

Cooling fan speed	Cooling fan relay	
	LO	HI
Stop (OFF)	OFF	OFF
Low (LOW)	ON	OFF
High (HI)	OFF	ON

CONSULT-II Reference Value in Data Monitor Mode

BBS004V4

Specification data are reference values.

MONITOR ITEM	CONDITION		SPECIFICATION
AIR COND SIG	● Engine: After warming up, idle the engine	Air conditioner switch: OFF	OFF
		Air conditioner switch: ON (Compressor operates.)	ON
COOLING FAN	● Engine: After warming up, idle the engine ● Air conditioner switch: OFF	Engine coolant temperature is 97°C (207°F) or less	OFF
		Engine coolant temperature is between 98°C (208°F) and 99°C (210°F) or more	LOW*
		Engine coolant temperature is 100°C (212°F) or more	HIGH*

*: Models without air conditioner, cooling fan operates only ON and OFF operation, but CONSULT-II display will change OFF, LOW and HI depends on engine coolant temperature.

On Board Diagnosis Logic

BBS004V5

If the cooling fan or another component in the cooling system malfunctions, engine coolant temperature will rise. When the engine coolant temperature reaches an abnormally high temperature condition, a malfunction is indicated.

This self-diagnosis has the one trip detection logic.

DTC No.	Trouble diagnosis name	DTC detecting condition	Possible cause
P1217 1217	Engine over temperature (Overheat)	● Cooling fan does not operate properly (Overheat). ● Cooling fan system does not operate properly (Overheat). ● Engine coolant was not added to the system using the proper filling method. ● Engine coolant is not within the specified range.	● Harness or connectors (The cooling fan circuit is open or shorted.) ● Cooling fan ● IPDM E/R (Cooling fan relays) ● Radiator hose ● Radiator ● Reservoir tank (M/T models with A/C) ● Reservoir tank cap (M/T models with A/C) ● Radiator cap (M/T models without A/C and A/T models) ● Water pump ● Thermostat For more information, refer to EC-1144, "Main 12 Causes of Overheating" .

CAUTION:
When a malfunction is indicated, be sure to replace the coolant. Refer to MA-39, "Changing Engine Coolant" . Also, replace the engine oil. Refer to MA-45, "Changing Engine Oil" .

1. **Fill radiator with coolant up to specified level with a filling speed of 2 liters per minute. Be sure to use coolant with the proper mixture ratio. Refer to MA-26, "Engine Coolant Mixture Ratio" .**
2. **After refilling coolant, run engine to ensure that no water-flow noise is emitted.**

Overall Function Check

BBS004V6

Use this procedure to check the overall function of the cooling fan. During this check, a DTC might not be confirmed.

WARNING:
Never remove the reservoir tank cap (M/T models with A/C) or the radiator cap (M/T models without A/C and A/T models) when the engine is hot. Serious burns could be caused by high pressure fluid escaping from the reservoir tank or the radiator.
Wrap a thick cloth around cap. Carefully remove the cap by turning it a quarter turn to allow built-up pressure to escape. Then turn the cap all the way off.

WITH CONSULT-II

1. Check the coolant level in the reservoir tank and radiator.
   Allow engine to cool before checking coolant level.
   If the coolant level in the reservoir tank and/or radiator is below the proper range, skip the following steps and go to EC-1137, "PROCEDURE FOR MODELS WITH AIR CONDITIONER" or EC-1141, "PROCEDURE FOR MODELS WITHOUT AIR CONDITIONER" .
2. Confirm whether customer filled the coolant or not. If customer filled the coolant, skip the following steps and go to EC-1137, "PROCEDURE FOR MODELS WITH AIR CONDITIONER" or EC-1141, "PROCEDURE FOR MODELS WITHOUT AIR CONDITIONER" .
3. Turn ignition switch ON.

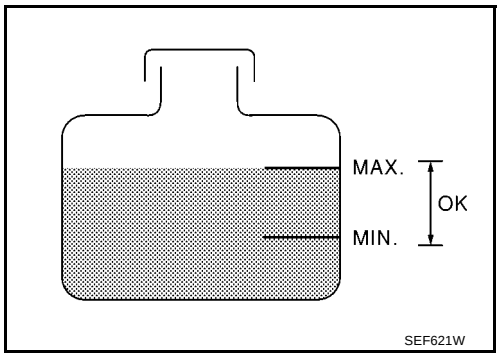

4. Perform “COOLING FAN” in “ACTIVE TEST” mode with CONSULT-II.
5. If the results are NG, go to EC-1137, "PROCEDURE FOR MODELS WITH AIR CONDITIONER" or EC-1141, "PROCEDURE FOR MODELS WITHOUT AIR CONDITIONER" .

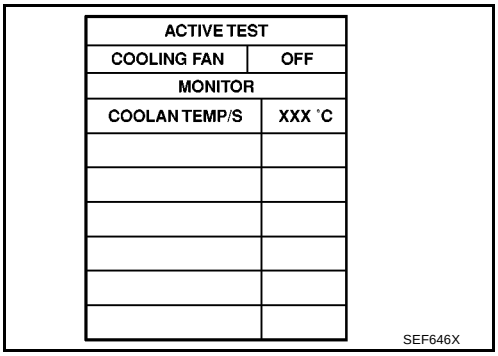

ACTIVE TEST	
COOLING FAN	OFF
MONITOR	
COOLAN TEMP/S	XXX °C

SEF646X

WITH GST

Models with Air Conditioner

1. Check the coolant level in the reservoir tank and radiator.
   Allow engine to cool before checking coolant level.
   If the coolant level in the reservoir tank and/or radiator is below the proper range, skip the following steps and go to EC-1137, "PROCEDURE FOR MODELS WITH AIR CONDITIONER" .
2. Confirm whether customer filled the coolant or not. If customer filled the coolant, skip the following steps and go to EC-1137, "PROCEDURE FOR MODELS WITH AIR CONDITIONER" .
3. Start engine.
   CAUTION:
   Be careful not to overheat engine.
4. Set temperature control switch to full cold position.
5. Turn air conditioner switch ON.
6. Turn blower fan switch ON.
7. Run engine at idle for a few minutes with air conditioner operating.
   CAUTION:
   Be careful not to overheat engine.
8. Make sure that cooling fans operates at low speed.
   If NG, go to EC-1137, "PROCEDURE FOR MODELS WITH AIR CONDITIONER" or .
   If OK, go to the following step.
9. Turn ignition switch OFF.
10. Turn air conditioner switch and blower fan switch OFF.
11. Disconnect engine coolant temperature sensor harness connector.
12. Connect 150Ω resistor to engine coolant temperature sensor harness connector.

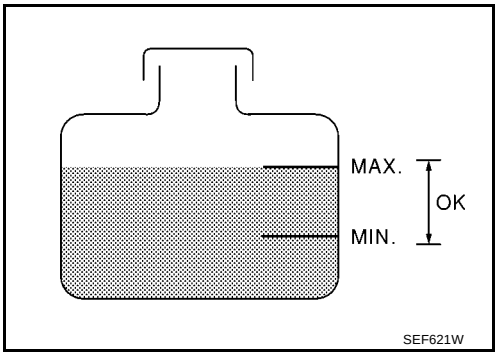

SEF621W

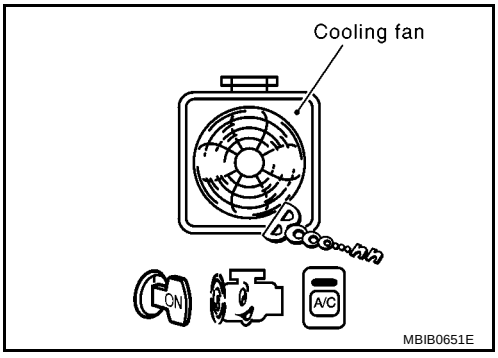

MBIB0651E

13. Restart engine and make sure that cooling fan operates at higher speed than low speed.
    CAUTION:
    Be careful not to overheat engine.
14. If NG, go to EC-1137, "PROCEDURE FOR MODELS WITH AIR CONDITIONER" .

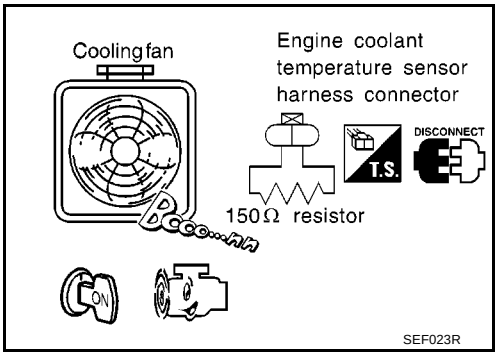

SEF023R

Models without Air Conditioner

1. Check the coolant level in the reservoir tank and radiator.
   Allow engine to cool before checking coolant level.
   If the coolant level in the reservoir tank and/or radiator is below the proper range, skip the following steps and go to EC-1141, "PROCEDURE FOR MODELS WITHOUT AIR CONDITIONER".
2. Confirm whether customer filled the coolant or not. If customer filled the coolant, skip the following steps and go to EC-1141, "PROCEDURE FOR MODELS WITHOUT AIR CONDITIONER".
3. Disconnect engine coolant temperature sensor harness connector.

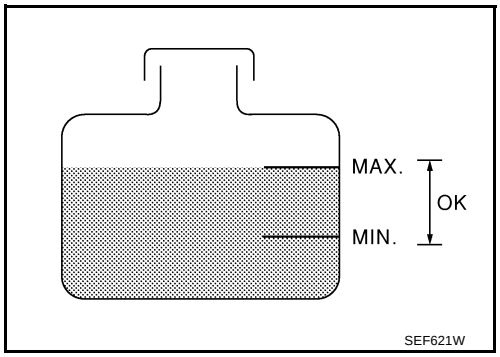

4. Connect 150Ω resistor to engine coolant temperature sensor harness connector.
5. Start engine and make that cooling fan operates. Be careful not to overheat engine.
6. If NG, go to EC-1141, "PROCEDURE FOR MODELS WITHOUT AIR CONDITIONER".

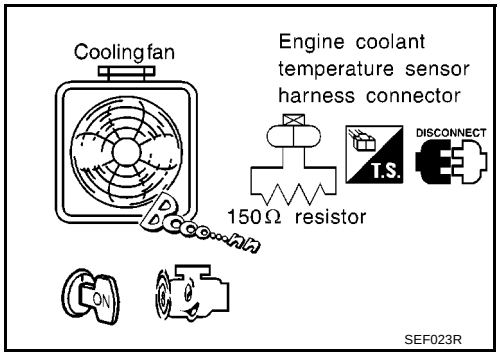

Wiring Diagram
MODELS WITH AIR CONDITIONER

BBS004V7

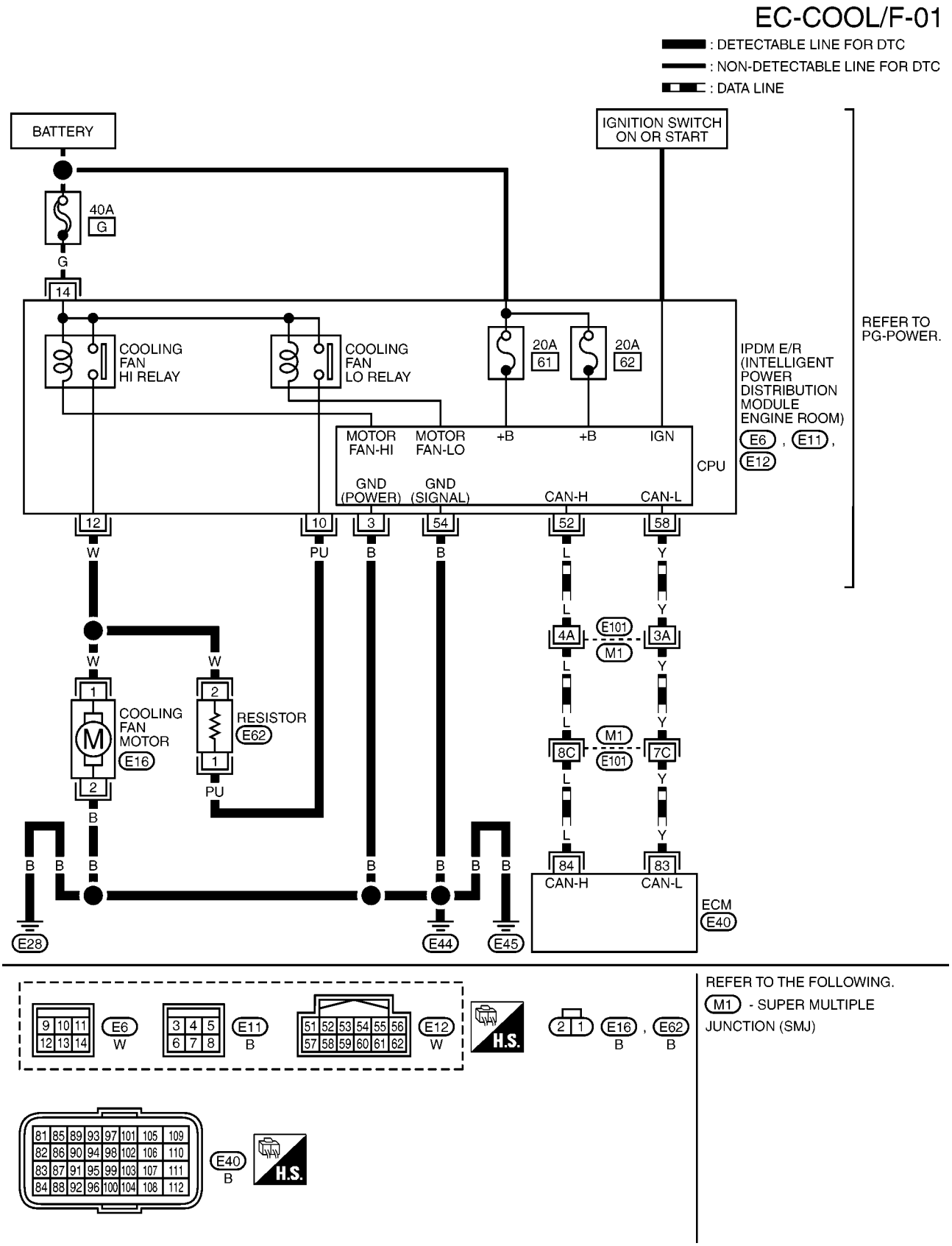

MBWA1475E

MODELS WITHOUT AIR CONDITIONER

EC-COOL/F-02

: DETECTABLE LINE FOR DTC
: NON-DETECTABLE LINE FOR DTC
: DATA LINE

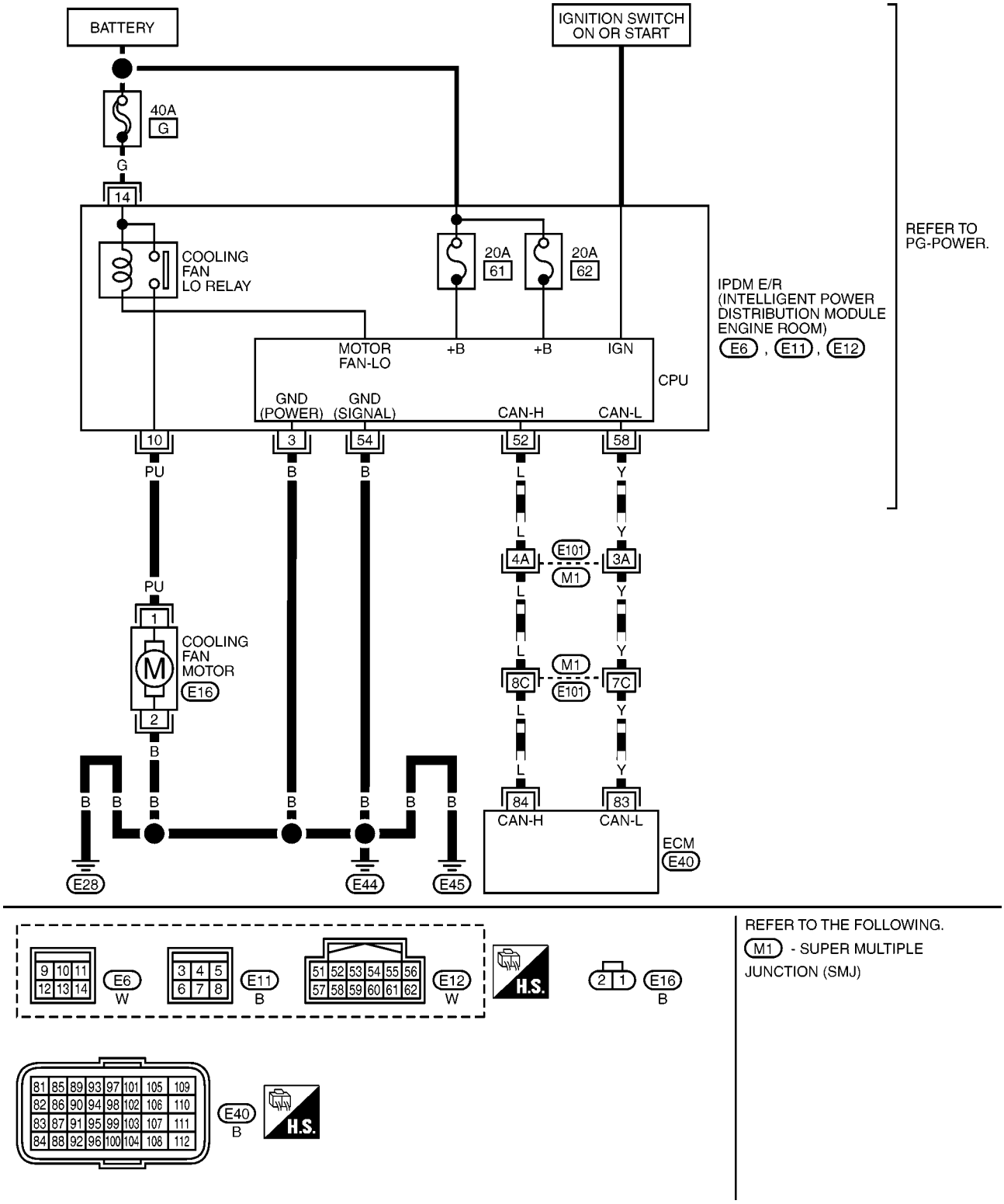

MBWA1476E

Diagnostic Procedure

BBS004V8

PROCEDURE FOR MODELS WITH AIR CONDITIONER

1. INSPECTION START

Do you have CONSULT-II?

Yes or No

Yes >> GO TO 2.
No >> GO TO 4.

2. CHECK COOLING FAN LOW SPEED OPERATION

With CONSULT-II

1. Turn ignition switch ON.
2. Perform “COOLING FAN” in “ACTIVE TEST” mode with CONSULT-II and touch “LOW” on the CONSULT-II screen.
3. Make sure that cooling fan operates at low speed.

OK or NG

OK >> GO TO 3.
NG >> Check cooling fan control circuit. (Go to EC-1139, "PROCEDURE A" .)

ACTIVE TEST	
COOLING FAN	LOW
MONITOR	
COOLAN TEMP/S	XXX °C

SEF784Z

3. CHECK COOLING FAN HIGH SPEED OPERATION

With CONSULT-II

1. Touch “HIGH” on the CONSULT-II screen.
2. Make sure that cooling fan operates at higher speed than low speed.

OK or NG

OK >> GO TO 6.
NG >> Check cooling fan control circuit. (Go to EC-1139, "PROCEDURE A" .)

ACTIVE TEST	
COOLING FAN	HIGH
MONITOR	
COOLAN TEMP/S	XXX °C

SEF785Z

4. CHECK COOLING FAN LOW SPEED OPERATION

Without CONSULT-II

1. Start engine and let it idle.
2. Turn air conditioner switch ON.
3. Turn blower fan switch ON.
4. Make sure that cooling fan operates at low speed.

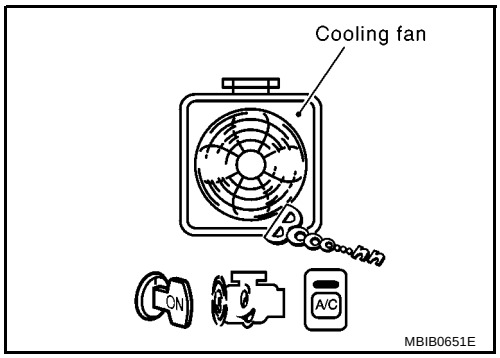

OK or NG

OK >> GO TO 5.
NG >> Check cooling fan low speed control circuit. (Go to EC-1139, "PROCEDURE A" .)

5. CHECK COOLING FAN HIGH SPEED OPERATION

Without CONSULT-II

1. Turn ignition switch OFF.
2. Turn air conditioner switch and blower fan switch OFF.
3. Disconnect engine coolant temperature sensor harness connector.
4. Connect 150Ω resistor to engine coolant temperature sensor harness connector.
5. Restart engine and make sure that cooling fan operates at higher speed than low speed.

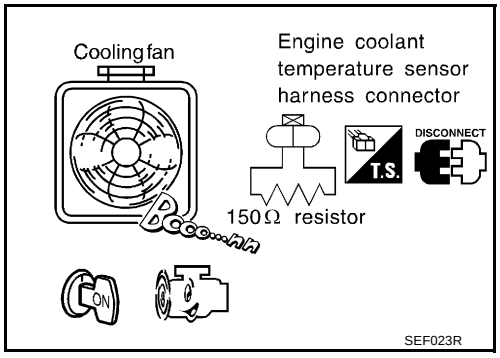

OK or NG

OK >> GO TO 6.
NG >> Check cooling fan high speed control circuit. (Go to EC-1139, "PROCEDURE A" .)

6. CHECK COOLING SYSTEM FOR LEAK

Refer to CO-27, "ENGINE COOLANT" .

OK or NG

OK >> GO TO 8.
NG >> GO TO 7.

7. DETECT MALFUNCTIONING PART

Check the following for leak.

- Hose
- Radiator
- Water pump (Refer to CO-36, "WATER PUMP" .)
- Reservoir tank

>> Repair or replace.

8. CHECK RESERVOIR TANK CAP (M/T MODELS) OR RADIATOR CAP (A/T MODELS)

Refer to CO-35, "Checking Reservoir Tank Cap (M/T with A/C Models)" or CO-34, "Checking Radiator Cap (All Models Except M/T with A/C)" .

OK or NG

OK >> GO TO 9.
NG >> Replace reservoir tank cap (M/T models) or radiator cap (A/T models).

9. CHECK THERMOSTAT

Refer to CO-38, "THERMOSTAT" .

OK or NG

OK >> GO TO 10.
NG >> Replace thermostat.

10. CHECK ENGINE COOLANT TEMPERATURE SENSOR

Refer to EC-951, "Component Inspection" .

OK or NG

OK >> GO TO 11.
NG >> Replace engine coolant temperature sensor.

11. CHECK MAIN 12 CAUSES

If the cause cannot be isolated, go to EC-1144, "Main 12 Causes of Overheating" .

>> **INSPECTION END**

PROCEDURE A

1. CHECK POWER SUPPLY CIRCUIT

1. Turn ignition switch OFF.
2. Disconnect IPDM E/R harness connector E6.
3. Check voltage between IPDM E/R terminal 14 and ground with CONSULT-II or tester.

Voltage: Battery voltage

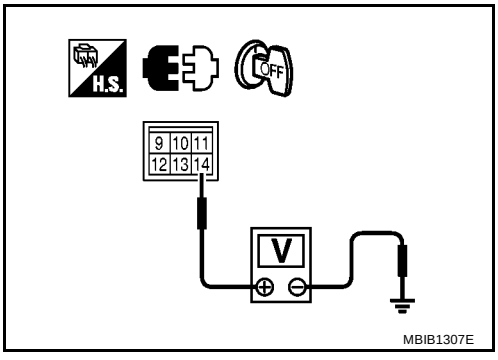

OK or NG

OK >> GO TO 3.
NG >> GO TO 2.

2. DETECT MALFUNCTIONING PART

Check the following.

- 40A fusible link
- Harness for open or short between IPDM E/R and battery

>> Repair open circuit or short to ground or short to power in harness or connectors.

3. CHECK COOLING FAN MOTOR CIRCUIT

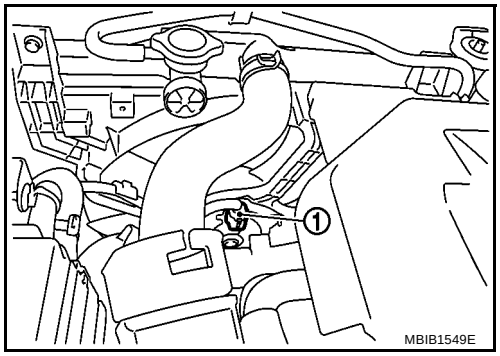

1. Disconnect cooling fan motor harness connector (1).
- ⇦: Vehicle front
2. Disconnect IPDM E/R harness connectors E11 and E12.
3. Check harness continuity between cooling fan motor terminal 1 and IPDM E/R terminal 10, cooling fan motor terminal 2 and ground.
   Refer to wiring diagram.

   Continuity should exist.
4. Also check harness for short to ground and short to power.
5. Check harness continuity between IPDM E/R terminal 12 and cooling fan motor terminal 1.
   Refer to wiring diagram.

   Continuity should exist.
6. Also check harness for short to ground and short to power.
7. Check harness continuity between IPDM E/R terminals 3, 53 and ground.
   Refer to Wiring Diagram.

   Continuity should exist.
8. Also check harness for short to ground and short to power.

OK or NG

OK >> GO TO 5.
NG >> GO TO 4.

4. DETECT MALFUNCTIONING PART

Check the following.

- Harness for open or short between cooling fan motor and IPDM E/R
- Harness for open or short between cooling fan motor and ground
- Harness for open or short between resistor and IPDM E/R
- Harness for open or short between resistor and cooling fan motor
- Resistor E62

>> Repair open circuit or short to ground or short to power in harness or connectors.

5. CHECK COOLING FAN MOTOR

Refer to EC-1145, "Component Inspection" .

OK or NG

OK >> GO TO 6.
NG >> Replace cooling fan motor.

6. CHECK INTERMITTENT INCIDENT

Perform EC-917, "TROUBLE DIAGNOSIS FOR INTERMITTENT INCIDENT" .

OK or NG

OK >> Replace IPDM E/R. Refer to PG-18, "IPDM E/R (INTELLIGENT POWER DISTRIBUTION MODULE ENGINE ROOM)" .
NG >> Repair or replace harness or connector.

PROCEDURE FOR MODELS WITHOUT AIR CONDITIONER

1. INSPECTION START

Do you have CONSULT-II?

Yes or No

Yes >> GO TO 2.
No >> GO TO 3.

2. CHECK COOLING FAN OPERATION

With CONSULT-II

1. Turn ignition switch ON.
2. Perform “COOLING FAN” in “ACTIVE TEST” mode with CONSULT-II and touch “LOW” on the CONSULT-II screen.
3. Make sure that cooling fan operates.

OK or NG

OK >> GO TO4.
NG >> Check cooling fan control circuit. (Go to EC-1142, "PROCEDURE B" .)

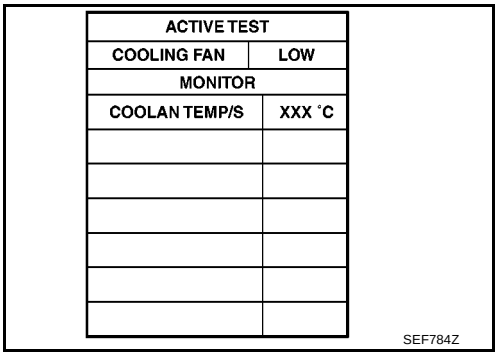

3. CHECK COOLING FAN OPERATION

Without CONSULT-II

1. Turn ignition switch OFF.
2. Disconnect engine coolant temperature sensor harness connector.
3. Connect 150Ω resistor to engine coolant temperature sensor harness connector.
4. Restart engine and make sure that cooling fan operates.

OK or NG

OK >> GO TO 4.
NG >> Check cooling fan speed control circuit. (Go to EC-1142, "PROCEDURE B" .)

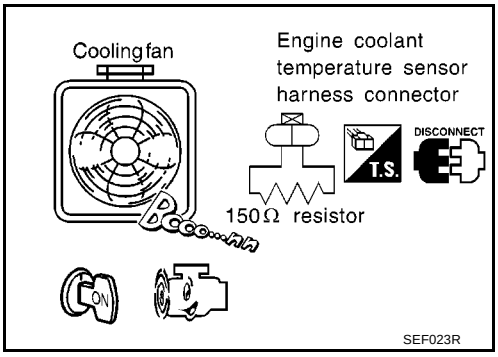

4. CHECK COOLING SYSTEM FOR LEAK

Refer to CO-27, "ENGINE COOLANT" .

OK or NG

OK >> GO TO 6.
NG >> GO TO 5.

5. DETECT MALFUNCTIONING PART

Check the following for leak.

- Hose
- Radiator
- Water pump (Refer to CO-36, "WATER PUMP" .)

>> Repair or replace.

6. CHECK RADIATOR CAP

Refer to CO-34, "Checking Radiator Cap (All Models Except M/T with A/C)" .

OK or NG

OK >> GO TO 7.
NG >> Replace radiator cap.

7. CHECK THERMOSTAT

Refer to CO-38, "THERMOSTAT" .

OK or NG

OK >> GO TO 8.
NG >> Replace thermostat.

8. CHECK ENGINE COOLANT TEMPERATURE SENSOR

Refer to EC-170, "Component Inspection" .

OK or NG

OK >> GO TO 9.
NG >> Replace engine coolant temperature sensor.

9. CHECK MAIN 12 CAUSES

If the cause cannot be isolated, go to EC-1144, "Main 12 Causes of Overheating" .

>> **INSPECTION END**

PROCEDURE B

1. CHECK POWER SUPPLY CIRCUIT

1. Turn ignition switch OFF.
2. Disconnect IPDM E/R harness connector E6.
3. Check voltage between IPDM E/R terminal 14 and ground with CONSULT-II or tester.

Voltage: Battery voltage

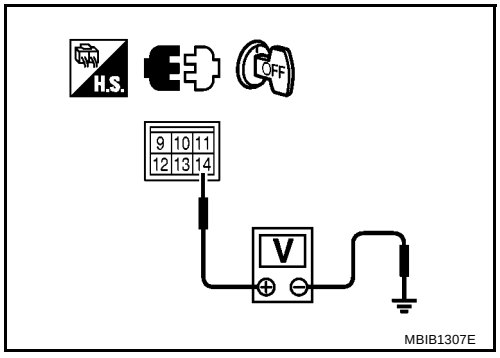

OK or NG

OK >> GO TO 3.
NG >> GO TO 2.

2. DETECT MALFUNCTIONING PART

Check the following.

- 40A fusible link
- Harness for open or short between IPDM E/R and battery

>> Repair open circuit or short to ground or short to power in harness or connectors.

3. CHECK COOLING FAN MOTORS CIRCUIT

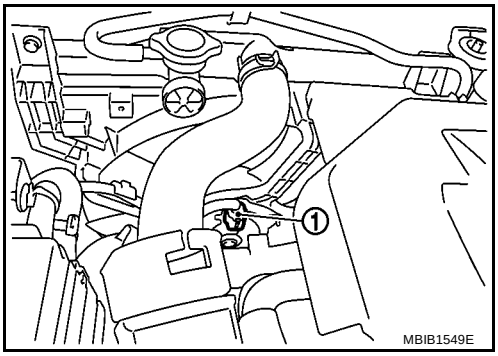

1. Disconnect cooling fan motor harness connector (1).

– ⇦: Vehicle front

2. Disconnect IPDM E/R harness connectors E11 and E12.
3. Check harness continuity between cooling fan motor terminal 1 and IPDM E/R terminal 10, cooling fan motor terminal 2 and ground.
   Refer to wiring diagram.

   Continuity should exist.

4. Also check harness for short to ground and short to power.
5. Check harness continuity between IPDM E/R terminals 3, 53 and ground.
   Refer to Wiring Diagram.

   Continuity should exist.

6. Also check harness for short to ground and short to power.

OK or NG

OK >> GO TO 5.
NG >> GO TO 4.

4. DETECT MALFUNCTIONING PART

Check the following.

- Harness for open or short between cooling fan motor and IPDM E/R
- Harness for open or short between cooling fan motor and ground

>> Repair open circuit or short to ground or short to power in harness or connectors.

5. CHECK COOLING FAN MOTOR

Refer to EC-1145, "Component Inspection" .

OK or NG

OK >> GO TO 6.
NG >> Replace cooling fan motor.

6. CHECK INTERMITTENT INCIDENT

Perform EC-917, "TROUBLE DIAGNOSIS FOR INTERMITTENT INCIDENT" .

OK or NG

OK >> Replace IPDM E/R. Refer to PG-18, "IPDM E/R (INTELLIGENT POWER DISTRIBUTION MODULE ENGINE ROOM)" .
NG >> Repair or replace harness or connector.

Main 12 Causes of Overheating

BBS004V9

Engine	Step	Inspection item	Equipment	Standard	Reference page
OFF	1	● Blocked radiator ● Blocked condenser ● Blocked radiator grille ● Blocked bumper	● Visual	No blocking	—
	2	● Coolant mixture	● Coolant tester	50 - 50% coolant mixture	See MA-26, "Engine Coolant Mixture Ratio" .
	3	● Coolant level	● Visual	Coolant up to MAX level in reservoir tank and radiator filler neck	See CO-27, "LEVEL CHECK" .
	4*5	● Radiator cap	● Pressure tester	59 - 98 kPa (0.59 - 0.98 bar, 0.6 - 1.0 kg/cm^2 , 9 - 14 psi) (Limit)	See CO-34, "Checking Radiator Cap (All Models Except M/T with A/C)" .
	4*6	● Reservoir tank cap	● Pressure tester	88 kPa (0.88 bar, 0.90 kg/cm^2 , 12.8psi)	See CO-35, "Checking Reservoir Tank Cap (M/T with A/C Models)" .
ON*2	5	● Coolant leaks	● Visual	No leaks	See CO-27, "LEAK CHECK" .
ON*2	6	● Thermostat	● Touch the upper and lower radiator hoses	Both hoses should be hot	See CO-38, "THERMOSTAT" , and CO-31, "RADIATOR" .
ON*1	7	● Cooling fan	● CONSULT-II	Operating	See trouble diagnosis for DTC P1217 (EC-1137, "Diagnostic Procedure").
OFF	8	● Combustion gas leak	● Color checker chemical tester 4 Gas analyzer	Negative	—
ON*3	9	● Coolant temperature gauge	● Visual	Gauge less than 3/4 when driving	—
		● Coolant overflow to reservoir tank	● Visual	No overflow during driving and idling	See MA-39, "Changing Engine Coolant" .
OFF*4	10	● Coolant return from reservoir tank to radiator	● Visual	Should be initial level in reservoir tank	See CO-27, "LEVEL CHECK" .
OFF	11	● Cylinder head	● Straight gauge feeler gauge	0.1 mm (0.004 in) Maximum distortion (warping)	See EM-173, "CYLINDER HEAD" .
	12	● Cylinder block and pistons	● Visual	No scuffing on cylinder walls or piston	See EM-189, "CYLINDER BLOCK" .

*1: Turn the ignition switch ON.
*2: Engine running at 3,000 rpm for 10 minutes.
*3: Drive at 90 km/h (55 MPH) for 30 minutes and then let idle for 10 minutes.
*4: After 60 minutes of cool down time.
*5: M/T models without A/C and A/T models.
*6: M/T models with A/C.
For more information, refer to CO-24, "OVERHEATING CAUSE ANALYSIS" .

Component Inspection

BBS004VA

COOLING FAN MOTOR

1. Disconnect cooling fan motor harness connectors.
2. Supply cooling fan motor terminals with battery voltage and check operation.

	Terminals	
	(+)	(-)
Cooling fan motor	1	2

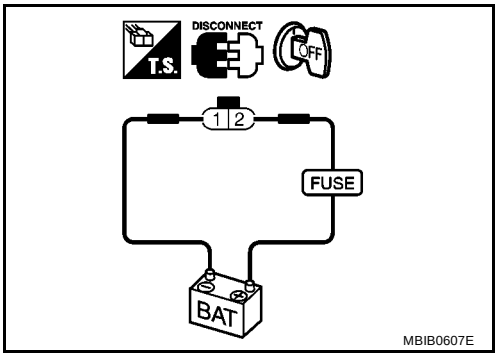

DTC P1225 TP SENSOR

PFP:16119

Component Description

BBS004H9

Electric throttle control actuator consists of throttle control motor, throttle position sensor, etc. The throttle position sensor responds to the throttle valve movement.
The throttle position sensor has the two sensors. These sensors are a kind of potentiometers which transform the throttle valve position into output voltage, and emit the voltage signal to the ECM. In addition, these sensors detect the opening and closing speed of the throttle valve and feed the voltage signals to the ECM. The ECM judges the current opening angle of the throttle valve from these signals and the ECM controls the throttle control motor to make the throttle valve opening angle properly in response to driving condition.

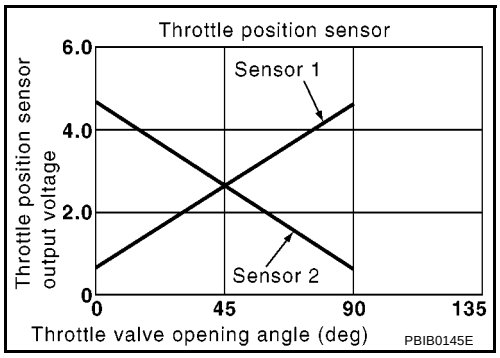

On Board Diagnosis Logic

BBS004HA

The MI will not light up for this diagnosis.

DTC No.	Trouble diagnosis name	DTC detecting condition	Possible cause
P1225 1225	Closed throttle position learning performance	Closed throttle position learning value is excessively low.	● Electric throttle control actuator (TP sensor 1 and 2)

DTC Confirmation Procedure

BBS004HB

NOTE:
If DTC Confirmation Procedure has been previously conducted, always turn ignition switch OFF and wait at least 10 seconds before conducting the next test.
TESTING CONDITION:
Before performing the following procedure, confirm that battery voltage is more than 10V at idle.

WITH CONSULT-II

1. Turn ignition switch ON.
2. Select “DATA MONITOR” mode with CONSULT-II.
3. Turn ignition switch OFF and wait at least 10 seconds.
4. Turn ignition switch ON.
5. If 1st trip DTC is detected, go to EC-1147, "Diagnostic Procedure" .

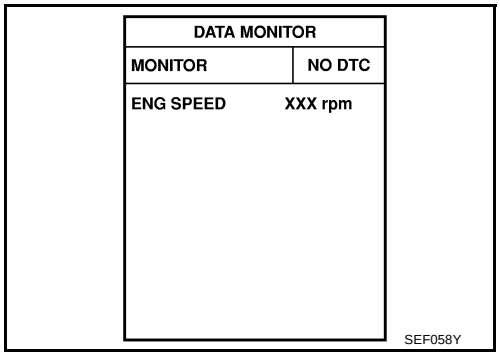

WITH GST

Follow the procedure “WITH CONSULT-II” above.

Diagnostic Procedure

BBS004HC

1. CHECK ELECTRIC THROTTLE CONTROL ACTUATOR VISUALLY

1. Turn ignition switch OFF.
2. Remove the intake air duct.
3. Check if foreign matter is caught between the throttle valve (1) and the housing.

– ⇦: Vehicle front
– Illustration shows the view with intake air duct removed.

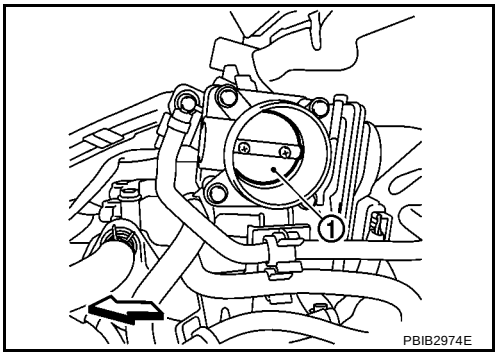

OK or NG

OK >> GO TO 2.
NG >> Remove the foreign matter and clean the electric throttle control actuator inside.

2. REPLACE ELECTRIC THROTTLE CONTROL ACTUATOR

1. Replace the electric throttle control actuator.
2. Perform EC-857, "Throttle Valve Closed Position Learning" .
3. Perform EC-858, "Idle Air Volume Learning" .

>> **INSPECTION END**

Removal and Installation

BBS004HD

ELECTRIC THROTTLE CONTROL ACTUATOR

Refer to EM-120, "INTAKE MANIFOLD" .

DTC P1226 TP SENSOR

PFP:16119

Component Description

BBS004HE

Electric throttle control actuator consists of throttle control motor, throttle position sensor, etc. The throttle position sensor responds to the throttle valve movement.
The throttle position sensor has the two sensors. These sensors are a kind of potentiometers which transform the throttle valve position into output voltage, and emit the voltage signal to the ECM. In addition, these sensors detect the opening and closing speed of the throttle valve and feed the voltage signals to the ECM. The ECM judges the current opening angle of the throttle valve from these signals and the ECM controls the throttle control motor to make the throttle valve opening angle properly in response to driving condition.

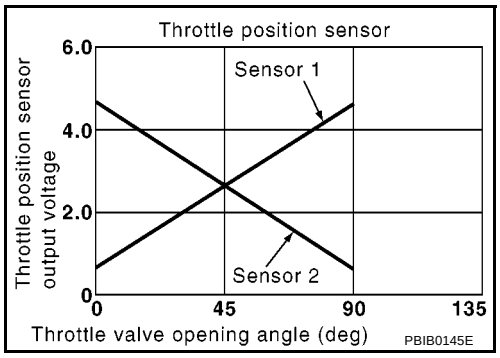

On Board Diagnosis Logic

BBS004HF

The MI will not light up for this diagnosis.

DTC No.	Trouble diagnosis name	DTC detecting condition	Possible cause
P1226 1226	Closed throttle position learning performance	Closed throttle position learning is not performed successfully, repeatedly.	● Electric throttle control actuator (TP sensor 1 and 2)

DTC Confirmation Procedure

BBS004HG

NOTE:
If DTC Confirmation Procedure has been previously conducted, always turn ignition switch OFF and wait at least 10 seconds before conducting the next test.
TESTING CONDITION:
Before performing the following procedure, confirm that battery voltage is more than 10V at idle.

WITH CONSULT-II

1. Turn ignition switch ON.
2. Select “DATA MONITOR” mode with CONSULT-II.
3. Turn ignition switch OFF and wait at least 10 seconds.
4. Turn ignition switch ON.
5. Repeat steps 3 and 4 for 32 times.
6. If 1st trip DTC is detected, go to EC-1149, "Diagnostic Procedure" .

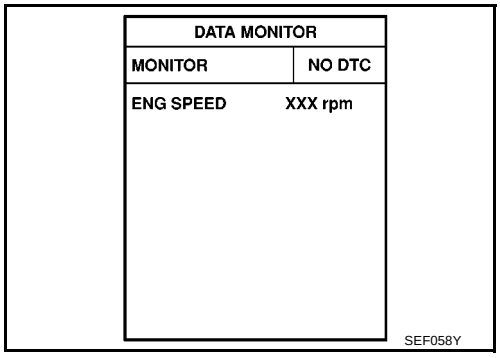

WITH GST

Follow the procedure “WITH CONSULT-II” above.

Diagnostic Procedure

BBS004HH

1. CHECK ELECTRIC THROTTLE CONTROL ACTUATOR VISUALLY

1. Turn ignition switch OFF.
2. Remove the intake air duct.
3. Check if foreign matter is caught between the throttle valve (1) and the housing.

– ⇦: Vehicle front
– Illustration shows the view with intake air duct removed.

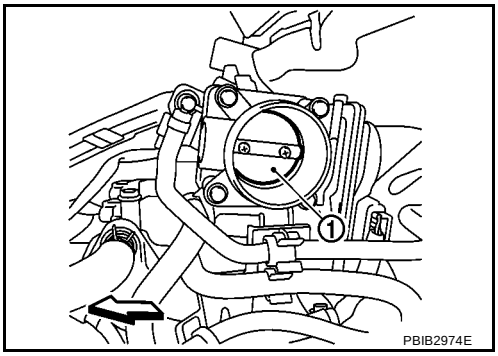

OK or NG

OK >> GO TO 2.
NG >> Remove the foreign matter and clean the electric throttle control actuator inside.

2. REPLACE ELECTRIC THROTTLE CONTROL ACTUATOR

1. Replace the electric throttle control actuator.
2. Perform EC-857, "Throttle Valve Closed Position Learning" .
3. Perform EC-858, "Idle Air Volume Learning" .

>> **INSPECTION END**

Removal and Installation

BBS004HI

ELECTRIC THROTTLE CONTROL ACTUATOR

Refer to EM-120, "INTAKE MANIFOLD" .

DTC P1229 SENSOR POWER SUPPLY

PFP:16119

On Board Diagnosis Logic

BBS004HJ

This self-diagnosis has the one trip detection logic.

DTC No.	Trouble diagnosis name	DTC detecting condition	Possible cause
P1229 1229	Sensor power supply circuit short	ECM detects a voltage of power source for sensor is excessively low or high.	● Harness or connectors (APP sensor 1 circuit is shorted.) (Throttle position sensor circuit is shorted.) [Camshaft position sensor (PHASE) circuit is shorted.] ● Accelerator pedal position sensor ● Throttle position sensor ● Camshaft position sensor (PHASE)

FAIL-SAFE MODE

When the malfunction is detected, ECM enters fail-safe mode and the MI lights up.

Engine operation condition in fail-safe mode
ECM stops the electric throttle control actuator control, throttle valve is maintained at a fixed opening (approx. 5 degrees) by the return spring.

DTC Confirmation Procedure

BBS004HK

NOTE:
If DTC Confirmation Procedure has been previously conducted, always turn ignition switch OFF and wait at least 10 seconds before conducting the next test.
TESTING CONDITION:
Before performing the following procedure, confirm that battery voltage is more than 10V at idle.

WITH CONSULT-II

1. Turn ignition switch ON.
2. Select “DATA MONITOR” mode with CONSULT-II.
3. Start engine and let it idle for 1 second.
4. If DTC is detected, go to EC-1155, "Diagnostic Procedure" .

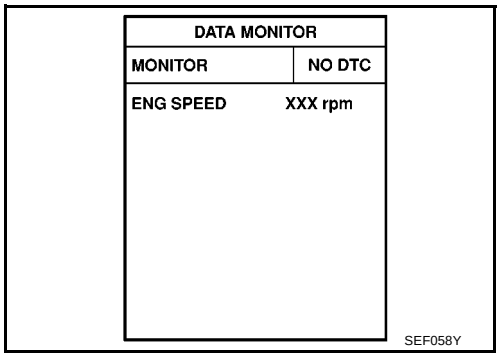

WITH GST

Follow the procedure “WITH CONSULT-II” above.

Wiring Diagram
LHD MODELS

BBS004HL

EC-SEN/PW-01

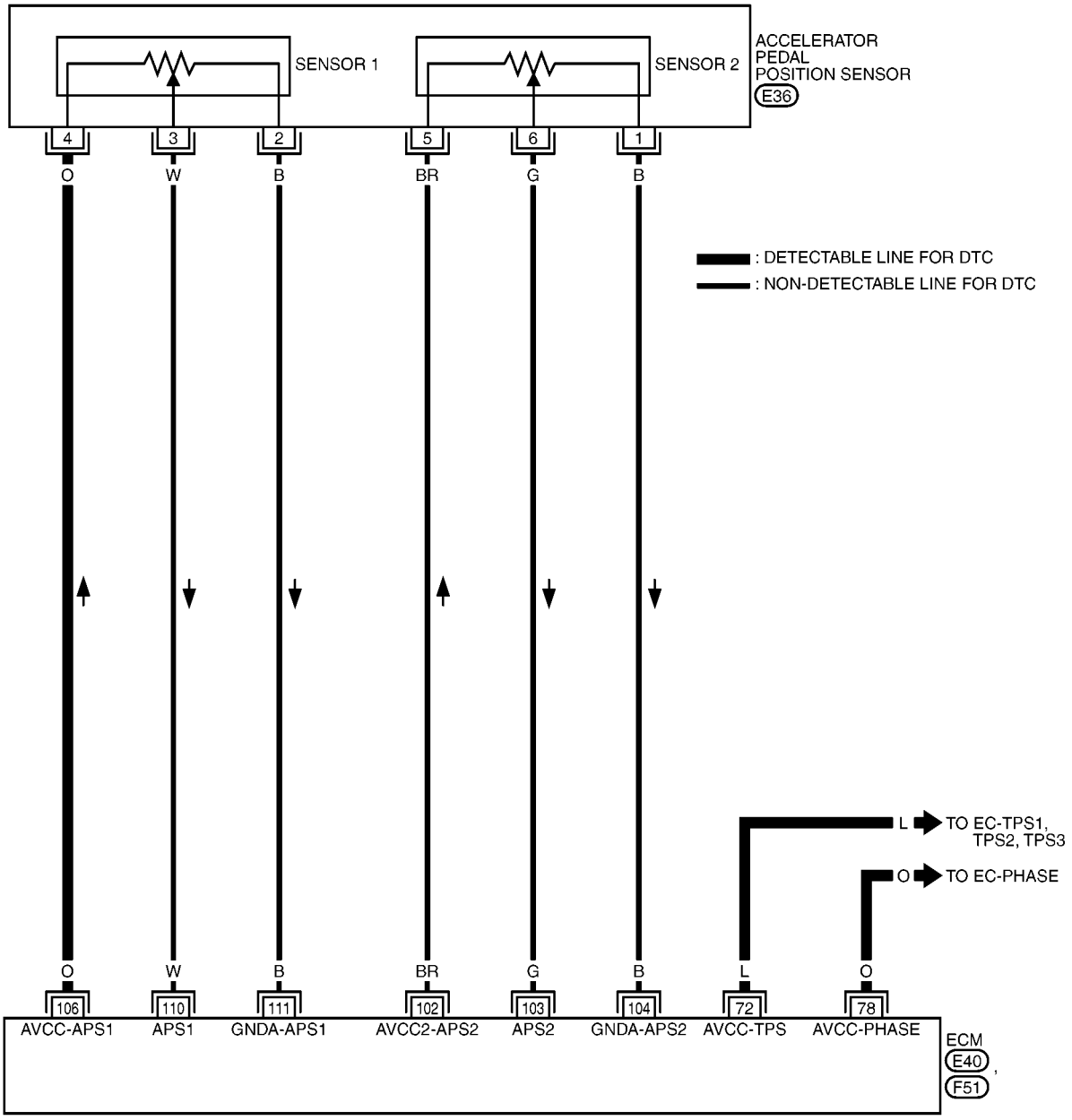

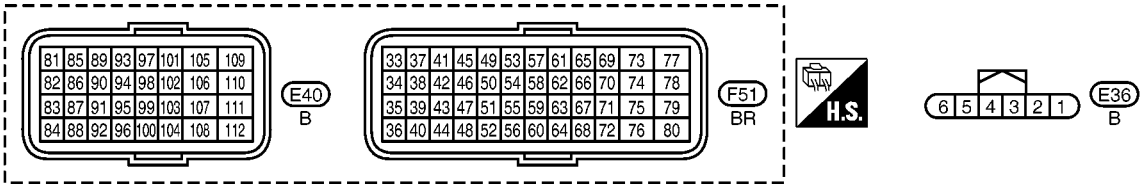

MBWA1477E

Specification data are reference values and are measured between each terminal and ground.

CAUTION:

Do not use ECM ground terminals when measuring input/output voltage. Doing so may result in damage to the ECM's transistor. Use a ground other than ECM terminals, such as the ground.

TERMINAL NO.	WIRE COLOR	ITEM	CONDITION	DATA (DC Voltage)
72	L	Sensor power supply (Throttle position sensor)	**[Ignition switch: ON]**	Approximately 5V
78	O	Sensor power supply [Camshaft position sensor (PHASE)]	**[Ignition switch: ON]**	Approximately 5V
102	BR	Sensor power supply (APP sensor 2)	**[Ignition switch: ON]**	Approximately 5V
103	G	Accelerator pedal position sensor 2	**[Ignition switch: ON]** ● Engine stopped ● Accelerator pedal: Fully released	0.3 - 0.6V
			[Ignition switch: ON] ● Engine stopped ● Accelerator pedal: Fully depressed	1.95 - 2.4V
104	B	Sensor ground (APP sensor 2)	**[Engine is running]** ● **Warm-up condition** ● Idle speed	Approximately 0V
106	O	Sensor power supply (APP sensor 1)	**[Ignition switch: ON]**	Approximately 5V
110	W	Accelerator pedal position sensor 1	**[Ignition switch: ON]** ● Engine stopped ● Accelerator pedal: Fully released	0.6 - 0.9V
			[Ignition switch: ON] ● Engine stopped ● Accelerator pedal: Fully depressed	3.9 - 4.7V
111	B	Sensor ground (APP sensor 1)	**[Engine is running]** ● **Warm-up condition** ● Idle speed	Approximately 0V

RHD MODELS

EC-SEN/PW-02

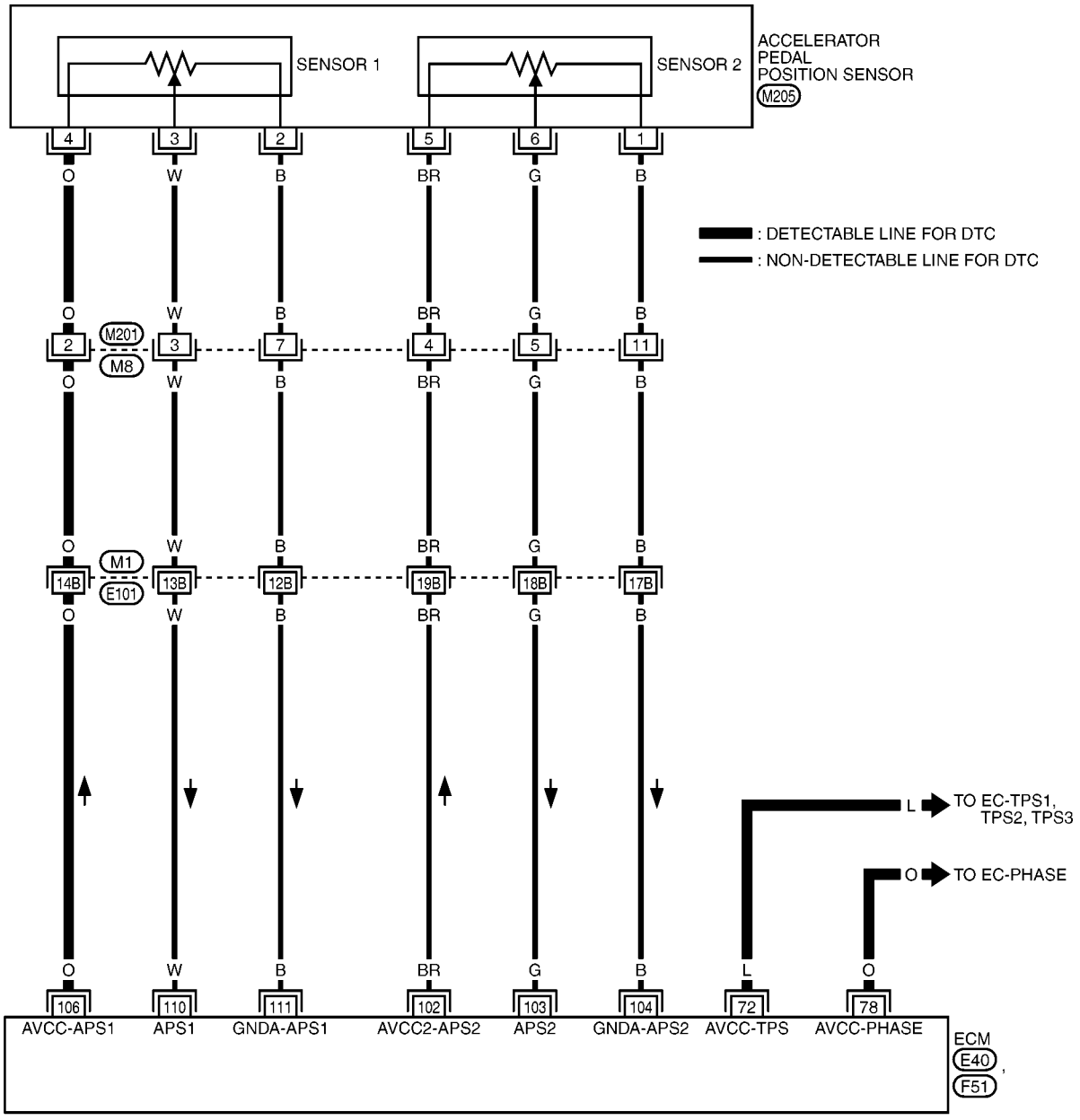

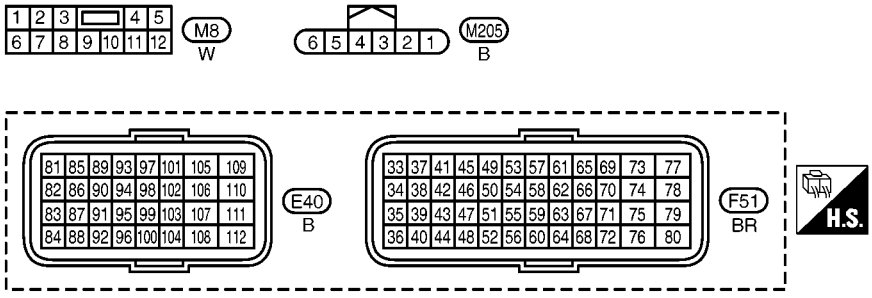

REFER TO THE FOLLOWING.
M1 - SUPER MULTIPLE JUNCTION (SMJ)

MBWA1478E

Specification data are reference values and are measured between each terminal and ground.

CAUTION:

Do not use ECM ground terminals when measuring input/output voltage. Doing so may result in damage to the ECM's transistor. Use a ground other than ECM terminals, such as the ground.

TERMINAL NO.	WIRE COLOR	ITEM	CONDITION	DATA (DC Voltage)
72	L	Sensor power supply (Throttle position sensor)	**[Ignition switch: ON]**	Approximately 5V
78	O	Sensor power supply [Camshaft position sensor (PHASE)]	**[Ignition switch: ON]**	Approximately 5V
102	BR	Sensor power supply (APP sensor 2)	**[Ignition switch: ON]**	Approximately 5V
103	G	Accelerator pedal position sensor 2	**[Ignition switch: ON]** ● Engine stopped ● Accelerator pedal: Fully released	0.3 - 0.6V
			[Ignition switch: ON] ● Engine stopped ● Accelerator pedal: Fully depressed	1.95 - 2.4V
104	B	Sensor ground (APP sensor 2)	**[Engine is running]** ● **Warm-up condition** ● Idle speed	Approximately 0V
106	O	Sensor power supply (APP sensor 1)	**[Ignition switch: ON]**	Approximately 5V
110	W	Accelerator pedal position sensor 1	**[Ignition switch: ON]** ● Engine stopped ● Accelerator pedal: Fully released	0.6 - 0.9V
			[Ignition switch: ON] ● Engine stopped ● Accelerator pedal: Fully depressed	3.9 - 4.7V
111	B	Sensor ground (APP sensor 1)	**[Engine is running]** ● **Warm-up condition** ● Idle speed	Approximately 0V

Diagnostic Procedure

BBS004HM

1. CHECK GROUND CONNECTIONS

1. Turn ignition switch OFF.
2. Loosen and retighten ground screws on the body.
   Refer to EC-924, "Ground Inspection" .

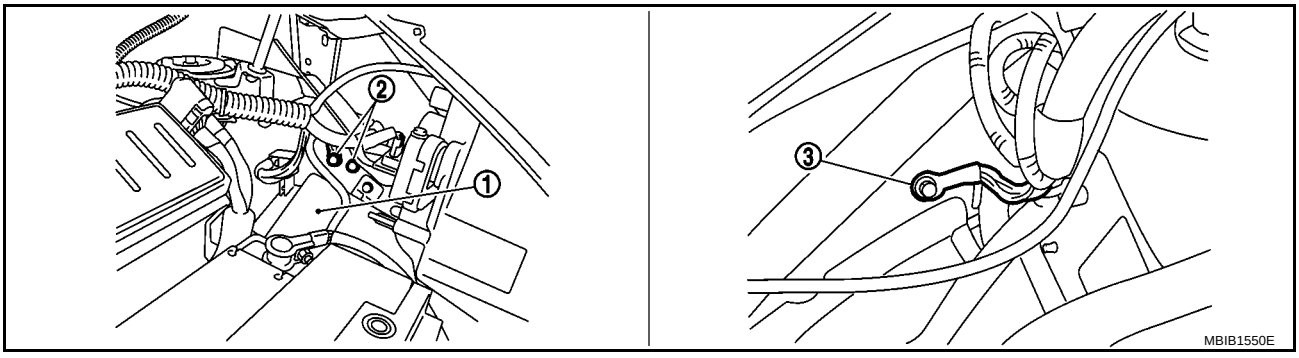

1. IPDM E/R
2. Body ground
3. Body ground

OK or NG

OK >> GO TO 2.
NG >> Repair or replace ground connections.

2. CHECK ACCELERATOR PEDAL POSITION SENSOR 1 POWER SUPPLY CIRCUIT

1. Disconnect accelerator pedal position (APP) sensor harness connector (1).
   - Accelerator pedal position sensor (2)
   - Accelerator pedal (3)
2. Turn ignition switch ON.

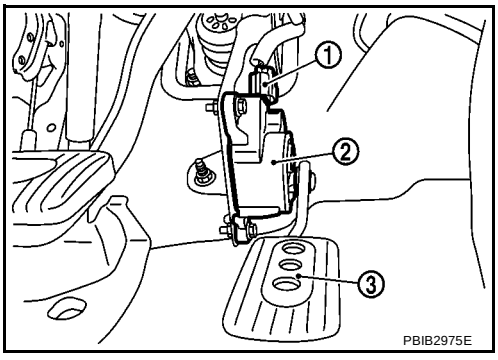

3. Check voltage between APP sensor terminal 4 and ground with CONSULT-II or tester.

   Voltage: Approximately 5V

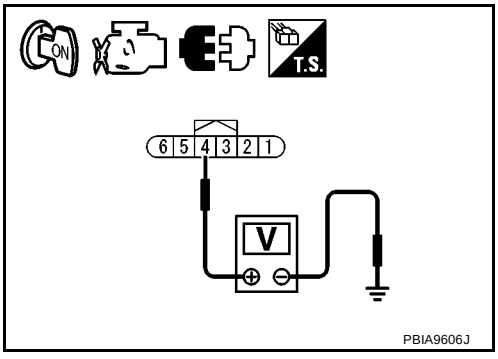

OK or NG

OK >> GO TO 7.
NG >> GO TO 3.

3. CHECK ACCELERATOR PEDAL POSITION SENSOR 1 POWER SUPPLY CIRCUIT-II

1. Turn ignition switch OFF.
2. Disconnect ECM harness connector.
3. Check harness continuity between APP sensor terminal 4 and ECM terminal 106.
   Refer to Wiring Diagram.

Continuity should exist.

OK or NG

OK >> GO TO 5.
NG >> GO TO 4.

4. DETECT MALFUNCTIONING PART

Check the following.

- Harness connectors M201, M8 (RHD models)
- Harness connectors M1, E101 (RHD models)
- Harness for open or short between APP sensor and ECM

>> Repair open circuit.

5. CHECK SENSOR POWER SUPPLY CIRCUITS

Check harness for short to power and short to ground, between the following terminals.

ECM terminal	Sensor terminal	Reference Wiring Diagram
72	Throttle position sensor terminal 1	EC-1193, "Wiring Diagram"
78	Camshaft position sensor (PHASE) terminal 1	EC-1051, "Wiring Diagram"
106	APP sensor terminal 4	EC-1151, "Wiring Diagram"

OK or NG

OK >> GO TO 6.
NG >> Repair short to ground or short to power in harness or connectors.

6. CHECK COMPONENTS

Check the following.

- Throttle position sensor (Refer to EC-1196, "Component Inspection" .)
- Camshaft position sensor (PHASE) (Refer to EC-1054, "Component Inspection" .)

OK or NG

OK >> GO TO 7.
NG >> Replace malfunctioning component.

7. CHECK APP SENSOR

Refer to EC-1206, "Component Inspection" .

OK or NG

OK >> GO TO 9.
NG >> GO TO 8.

8. REPLACE ACCELERATOR PEDAL ASSEMBLY

1. Replace accelerator pedal assembly.
2. Perform EC-857, "Accelerator Pedal Released Position Learning" .
3. Perform EC-857, "Throttle Valve Closed Position Learning" .
4. Perform EC-858, "Idle Air Volume Learning" .

>> **INSPECTION END**

9. CHECK INTERMITTENT INCIDENT

Refer to EC-917, "TROUBLE DIAGNOSIS FOR INTERMITTENT INCIDENT" .

>> **INSPECTION END**

DTC P1706 PNP SWITCH

PFP:32006

Component Description

BBS004HN

When the shift lever position is P or N (A/T), Neutral (M/T), park/neutral position (PNP) switch is ON.
ECM detects the position because the continuity of the line (the ON signal) exists.

CONSULT-II Reference Value in Data Monitor Mode

BBS004HO

Specification data are reference values.

MONITOR ITEM	CONDITION		SPECIFICATION
P/N POSI SW	● Ignition switch: ON	Shift lever: P or N (A/T), Neutral (M/T)	ON
		Shift lever: Except above	OFF

On Board Diagnosis Logic

BBS004HP

DTC No.	Trouble diagnosis name	DTC detecting condition	Possible cause
P1706 1706	Park/neutral position switch	The signal of the park/neutral position (PNP) switch is not changed in the process of engine starting and driving.	● Harness or connectors (PNP switch circuit is open or shorted.) ● Park/neutral position (PNP) switch

DTC Confirmation Procedure

BBS004HQ

CAUTION:
Always drive vehicle at a safe speed.

NOTE:
If DTC Confirmation Procedure has been previously conducted, always turn ignition switch OFF and wait at least 10 seconds before conducting the next test.

WITH CONSULT-II

1. Turn ignition switch ON.
2. Select “P/N POSI SW” in “DATA MONITOR” mode with CONSULT-II. Then check the “P/N POSI SW” signal under the following conditions.

Position (Shift lever)	Known-good signal
N or P position (A/T) Neutral position (M/T)	ON
Except above position	OFF

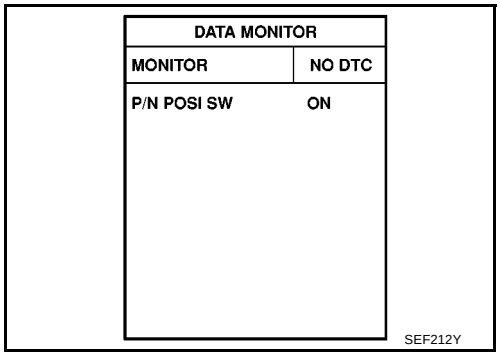

If NG, go to EC-1163, "Diagnostic Procedure" .
If OK, go to following step.

3. Select “DATA MONITOR” mode with CONSULT-II.
4. Start engine and warm it up to normal operating temperature.
5. Maintain the following conditions for at least 60 consecutive seconds.

ENG SPEED	A/T: 1,650 - 6,375 rpm M/T: 1,925 - 6,375 rpm
COOLAN TEMP/S	More than 70°C (158°F)
B/FUEL SCHDL	A/T: 3.5 - 31.8 msec M/T: 2.5 - 31.8 msec
VHCL SPEED SE	More than 64km/h (29 MPH)
Shift lever	Suitable position

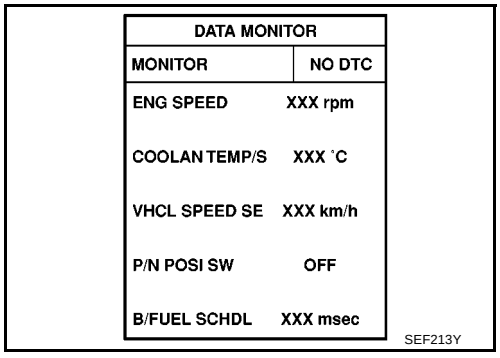

6. If 1st trip DTC is detected, go to EC-1163, "Diagnostic Procedure" .

Overall Function Check

BBS004HR

Use this procedure to check the overall function of the park/neutral position (PNP) switch circuit. During this check, a 1st trip DTC might not be confirmed.

WITH GST

1. Turn ignition switch ON.
2. Check voltage between ECM terminal 70 (PNP switch signal) and ground under the following conditions.

Condition (Shift lever)	Voltage V (Known-good data)
P or N position (A/T) Neutral position (M/T)	Approx. 0
Except above position	BATTERY VOLTAGE (11 - 14V)

3. If NG, go to EC-1163, "Diagnostic Procedure" .

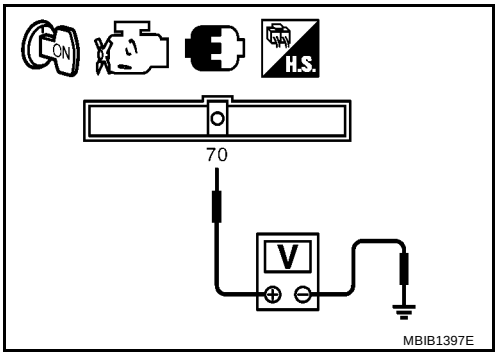

Wiring Diagram
A/T MODELS

BBS004HS

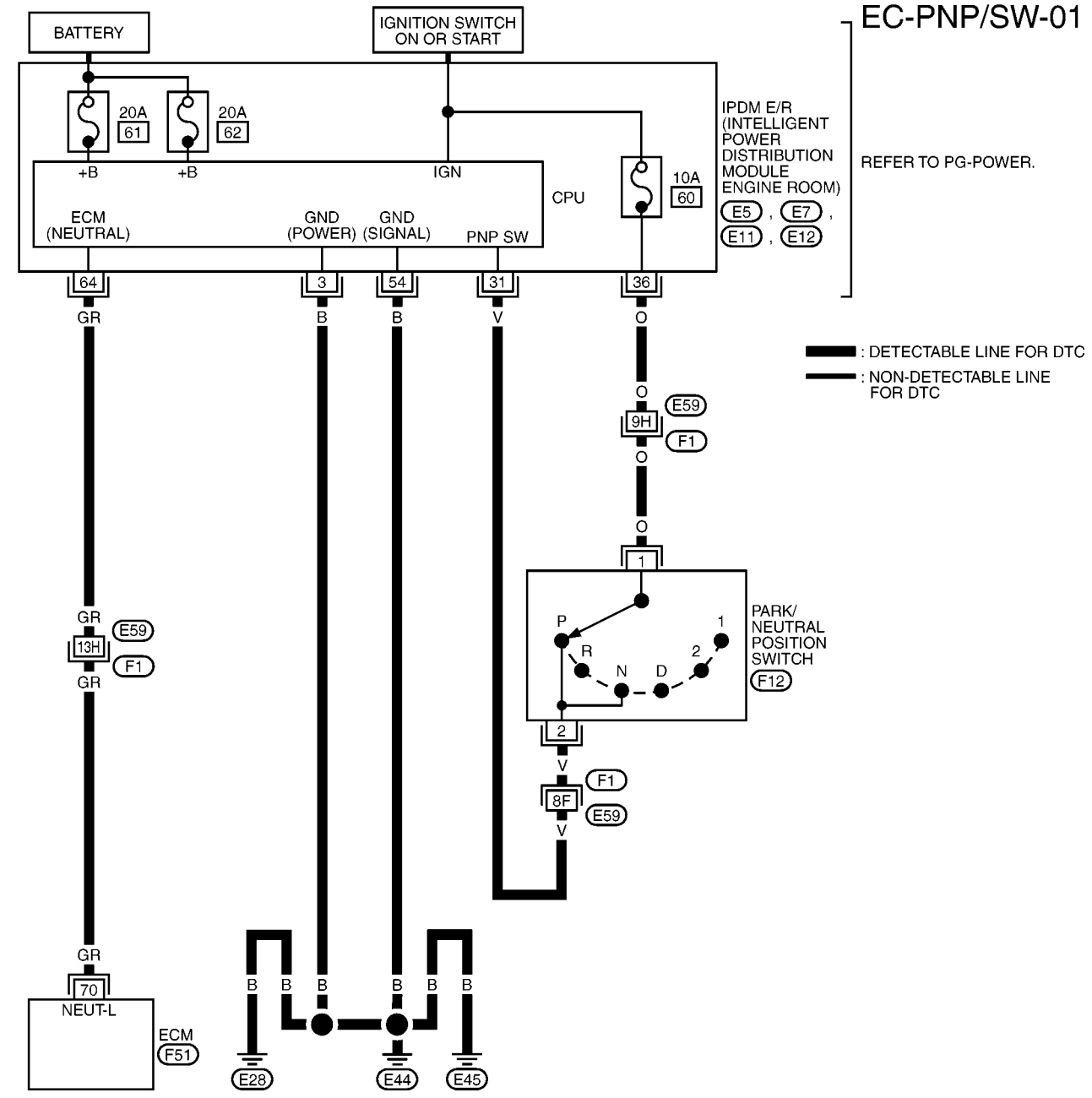

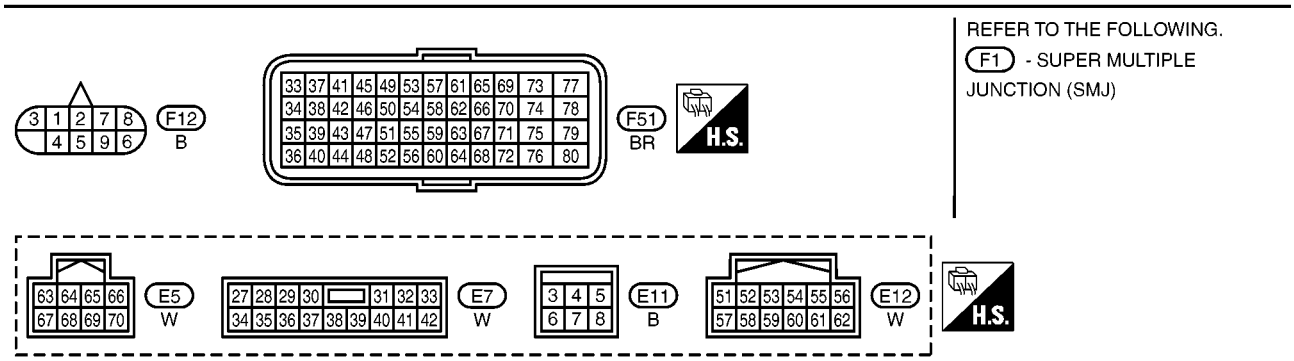

MBWA1479E

Specification data are reference values and are measured between each terminal and ground.

CAUTION:

Do not use ECM ground terminals when measuring input/output voltage. Doing so may result in damage to the ECM's transistor. Use a ground other than ECM terminals, such as the ground.

TERMINAL NO.	WIRE COLOR	ITEM	CONDITION	DATA (DC Voltage)
70	GR	Park/Neutral position (PNP) switch	**[Ignition switch: ON]** ● Shift lever: P or N (A/T models) ● Shift lever: Neutral (M/T models)	Approximately 0V
			[Ignition switch: ON] ● Except above position	BATTERY VOLTAGE (11 - 14V)

M/T MODELS

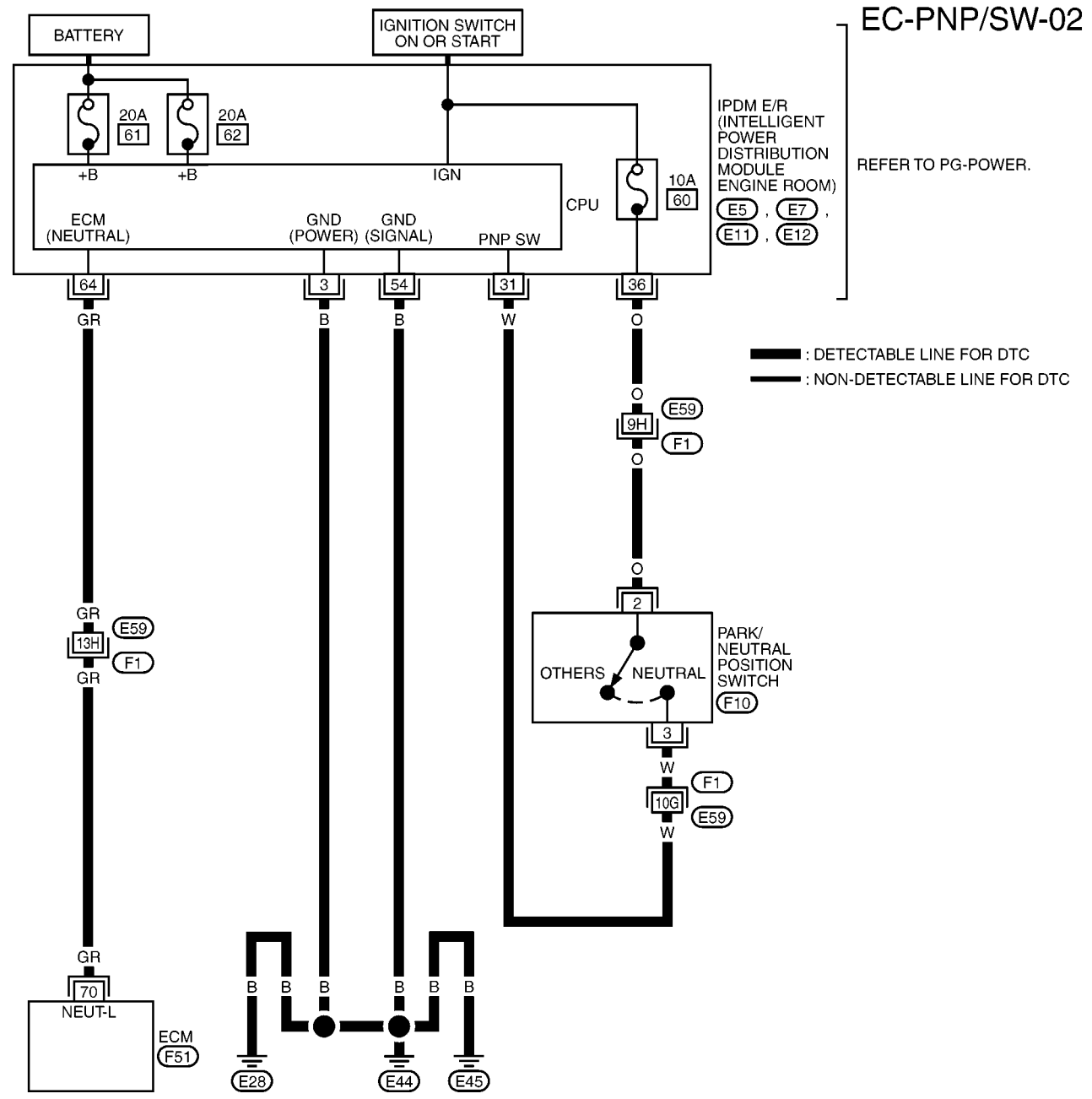

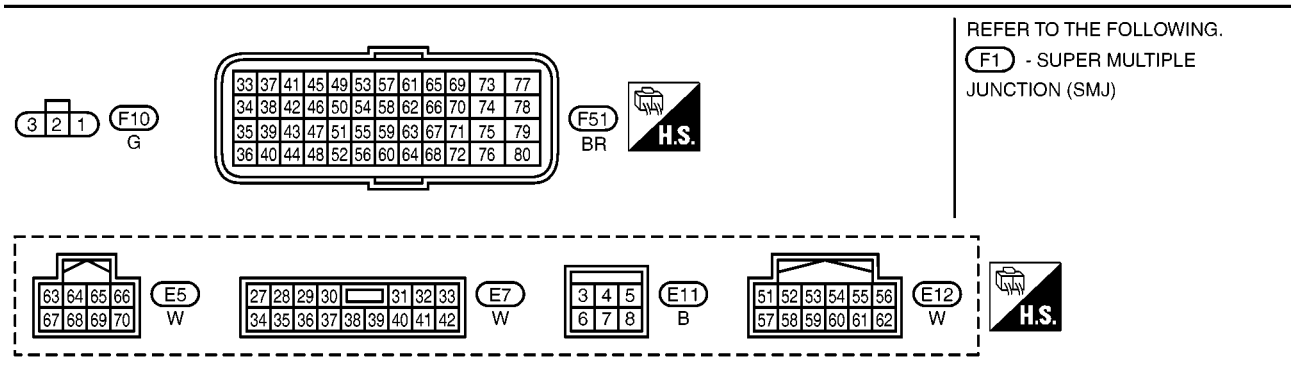

MBWA1480E

Specification data are reference values and are measured between each terminal and ground.

CAUTION:

Do not use ECM ground terminals when measuring input/output voltage. Doing so may result in damage to the ECM's transistor. Use a ground other than ECM terminals, such as the ground.

TERMINAL NO.	WIRE COLOR	ITEM	CONDITION	DATA (DC Voltage)
70	GR	Park/Neutral position (PNP) switch	**[Ignition switch: ON]** ● Shift lever: P or N (A/T models) ● Shift lever: Neutral (M/T models)	Approximately 0V
			[Ignition switch: ON] ● Except above position	BATTERY VOLTAGE (11 - 14V)

Diagnostic Procedure

BBS004HT

1. CHECK PNP SWITCH CIRCUIT

1. Turn ignition switch ON.
2. Check voltage between IPDM E/R terminal 31 and ground under following condition.

Shift lever position	Voltage
P or N (A/T models) Neutral (M/T models)	Battery voltage (11- 14V)
Except above position	Approximately 0V

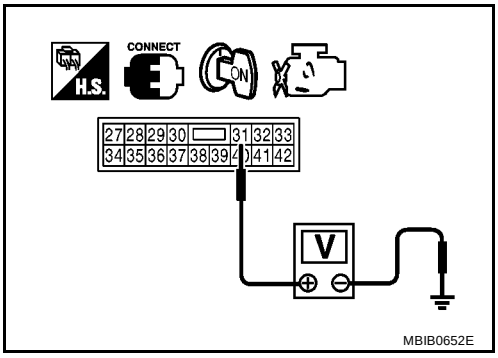

OK or NG

OK >> GO TO 8.
NG >> GO TO 2.

2. CHECK PNP SWITCH POWER SUPPLY CIRCUIT

1. Turn ignition switch OFF.
2. Disconnect PNP switch harness connector.
3. Turn ignition switch ON.
4. Check voltage between PNP switch terminal 1 (A/T models), 2 (M/T models) and ground with CONSULT-II or tester.

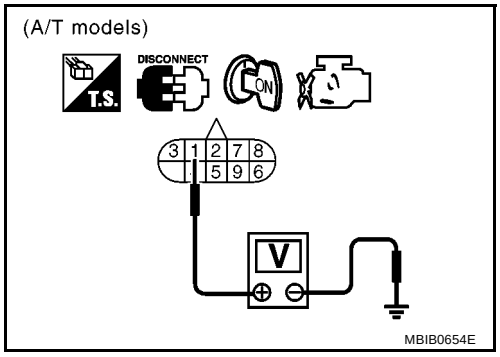

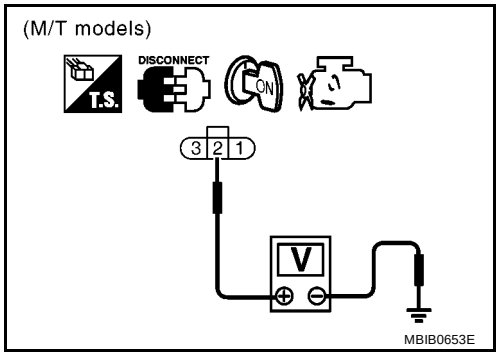

Voltage: Battery voltage

OK or NG

OK >> GO TO 4.
NG >> GO TO 3.

3. DETECT MALFUNCTIONING PARTS

Check the following.

- 10A fuse
- Harness connectors E59, F1
- IPDM E/R connector E7
- Harness for short or open between PNP switch and fuse

>> Repair or replace harness or connectors.

4. CHECK HARNESS CONTINUTY BETWEEN PNP SWITCH AND IPDM E/R

1. Turn ignition switch OFF.
2. Disconnect IPDM E/R harness connector E7.
3. Check harness continuity between IPDM E/R terminal 31 and PNP switch terminal 2 (A/T models), 3 (M/T models).Refer to Wiring Diagram.

Continuity should exist.

4. Also check harness for short to ground and short to power.

OK or NG

OK >> GO TO 6.
NG >> GO TO 5.

5. DETECT MALFUNCTIONING PART

Check the following.

- Harness connectors E59, F1
- Harness for open or short between IPDM E/R and PNP switch

>> Repair open circuit or short to ground or short to power in harness or connectors.

6. CHECK PNP SWITCH

Refer to AT-109, "Component Inspection" (A/T models) or MT-16, "Park/Neutral Position Switch" (M/T models).

OK or NG

OK >> GO TO 7.
NG >> Replace PNP switch.

7. CHECK INTERMITTENT INCIDENT

Refer to EC-917, "TROUBLE DIAGNOSIS FOR INTERMITTENT INCIDENT" .

>> **INSPECTION END**

8. CHECK PNP SWITCH GROUND CIRCUIT FOR OPEN AND SHORT

1. Turn ignition switch OFF.
2. Disconnect IPDM E/R harness connectors E11 and E12.
3. Check harness continuity between IPDM E/R terminal 3, 54 and ground.
   Refer to Wiring Diagram.

Continuity should exist.

4. Also check harness for short to power.

OK or NG

OK >> GO TO 9.
NG >> Repair open circuit or short to power in harness or connectors.

9. CHECK PNP SWITCH INPUT SIGNAL CIRCUIT FOR OPEN AND SHORT

1. Disconnect IPDM E/R harness connector E5
2. Disconnect ECM harness connector.
3. Check harness continuity between ECM terminal 70 and IPDM E/R terminal 64.
   Refer to Wiring Diagram.

   Continuity should exist.

4. Also check harness for short to ground and short to power.

OK or NG

OK >> GO TO 10.
NG >> Repair open circuit or short to ground or short to power in harness or connectors.

10. CHECK INTERMITTENT INCIDENT

Refer to EC-917, "TROUBLE DIAGNOSIS FOR INTERMITTENT INCIDENT" .

OK or NG

OK >> Replace IPDM E/R. Refer to PG-18, "IPDM E/R (INTELLIGENT POWER DISTRIBUTION MODULE ENGINE ROOM)" .
NG >> Repair or replace.

DTC P1805 BRAKE SWITCH

PFP:25320

Description

BBS004HU

Brake switch signal is applied to the ECM through the stop lamp switch when the brake pedal is depressed. This signal is used mainly to decrease the engine speed when the vehicle is driving.

CONSULT-II Reference Value in Data Monitor Mode

BBS004HV

Specification data are reference values.

MONITOR ITEM	CONDITION		SPECIFICATION
BRAKE SW	● Ignition switch: ON	Brake pedal: Fully released	OFF
		Brake pedal: Slightly depressed	ON

On Board Diagnosis Logic

BBS004HW

The MI will not light up for this self-diagnosis.

DTC No.	Trouble diagnosis name	DTC detecting condition	Possible cause
P1805 1805	Brake switch	A brake switch signal is not sent to ECM for extremely long time while the vehicle is driving.	● Harness or connectors (Stop lamp switch circuit is open or shorted.) ● Stop lamp switch

FAIL-SAFE MODE

BBS004HX

When the malfunction is detected, the ECM enters in fail-safe mode.

Engine operation condition in fail-fail safe mode	
ECM controls the electric throttle control actuator by regulating the throttle opening to a small range. Therefore, acceleration will be poor.	
Vehicle condition	Driving condition
When engine is idling	Normal
When accelerating	Poor acceleration

DTC Confirmation Procedure

BBS004HY

WITH CONSULT-II

1. Turn ignition switch ON.
2. Fully depress the brake pedal for at least 5 seconds.
3. Erase the DTC with CONSULT-II.
4. Select “DATA MONITOR” mode with CONSULT-II.
5. If 1st trip DTC is detected, go to EC-1169, "Diagnostic Procedure" .

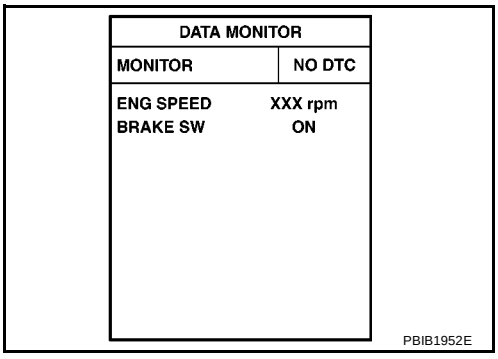

WITH GST

Follow the procedure “WITH CONSULT-II” above.

Wiring Diagram

BBS004HZ

EC-BRK/SW-01

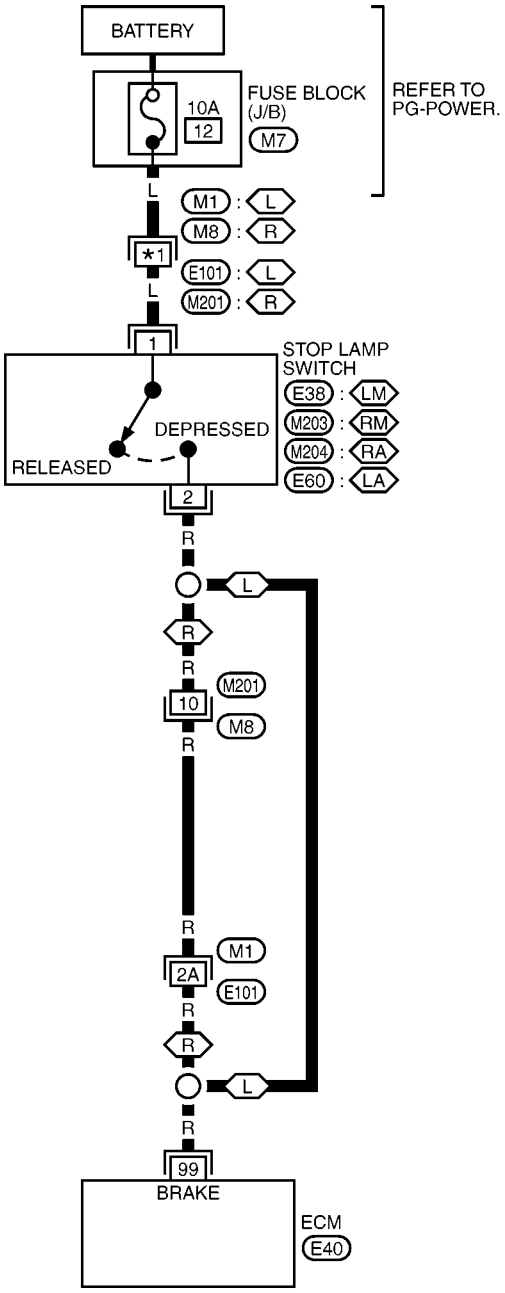

: DETECTABLE LINE FOR DTC
: NON-DETECTABLE LINE FOR DTC
L : LHD MODELS
R : RHD MODELS
LM : LHD MODELS WITH M/T
RM : RHD MODELS WITH M/T
LA : LHD MODELS WITH A/T
RA : RHD MODELS WITH A/T

*1 7A : L
9 : R

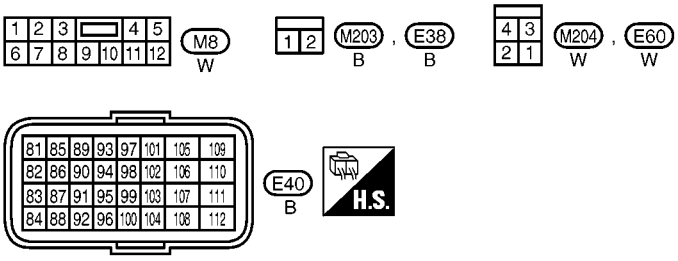

REFER TO THE FOLLOWING.
M1 - SUPER MULTIPLE JUNCTION (SMJ)
M7 - FUSE BLOCK - JUNCTION BOX (J/B)

MBWA1481E

Specification data are reference values and are measured between each terminal and ground.

CAUTION:
Do not use ECM ground terminals when measuring input/output voltage. Doing so may result in damage to the ECM's transistor. Use a ground other than ECM terminals, such as the ground.

TERMINAL NO.	WIRE COLOR	ITEM	CONDITION	DATA (DC Voltage)
99	R	Stop lamp switch	**[Ignition switch: OFF]** ● Brake pedal: Fully released	Approximately 0V
			[Ignition switch: OFF] ● Brake pedal: Slightly depressed	BATTERY VOLTAGE (11 - 14V)

Diagnostic Procedure

BBS004I0

1. CHECK STOP LAMP SWITCH CIRCUIT

1. Turn ignition switch OFF.
2. Check the stop lamp when depressing and releasing the brake pedal.

Brake pedal	Stop lamp
Fully released	Not illuminated
Slightly depressed	Illuminated

OK or NG

OK >> GO TO 4.
NG >> GO TO 2.

2. CHECK STOP LAMP SWITCH POWER SUPPLY CIRCUIT

1. Disconnect stop lamp switch (1) harness connector.
– Brake pedal (2)

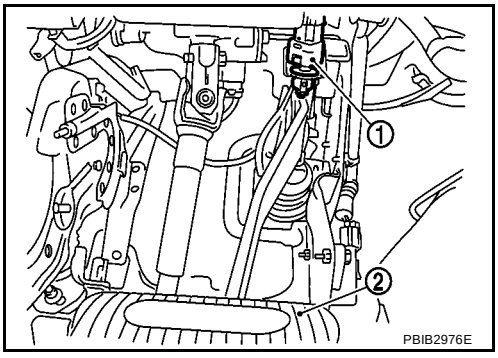

2. Check voltage between stop lamp switch terminal 1 and ground with CONSULT-II or tester.

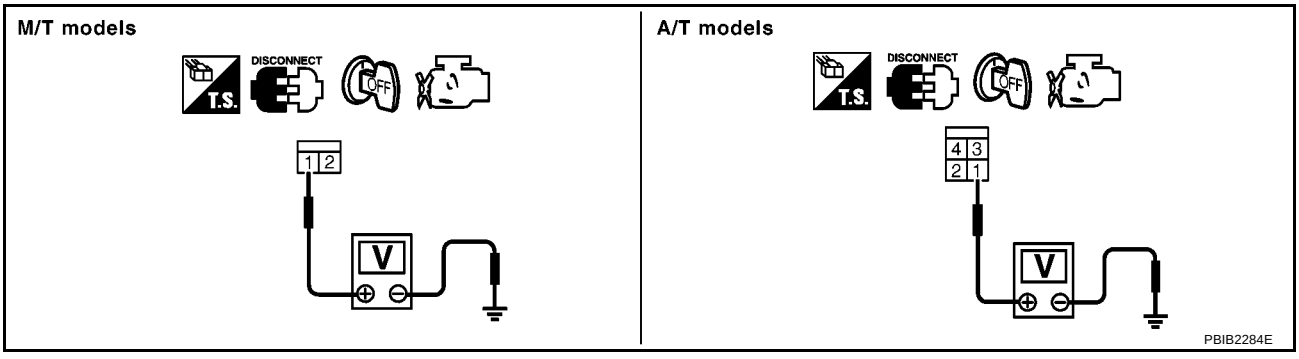

Voltage: Battery voltage

OK or NG

OK >> GO TO 4.
NG >> GO TO 3.

3. DETECT MALFUNCTIONING PART

Check the following.

- Harness connectors M1, E101 (LHD models)
- Harness connectors M8, M201 (RHD models)
- 10A fuse
- Harness for open and short between stop lamp switch and battery

>> Repair open circuit or short to ground or short to power in harness or connectors.

4. CHECK STOP LAMP SWITCH INPUT SIGNAL CIRCUIT FOR OPEN AND SHORT

1. Disconnect stop lamp switch (1) harness connector.
– Brake pedal (2)
2. Disconnect ECM harness connector.
3. Check harness continuity between stop lamp switch terminal 2 and ECM terminal 99.
Refer to Wiring Diagram.

Continuity should exist.

4. Also check harness for short to ground and short to power.

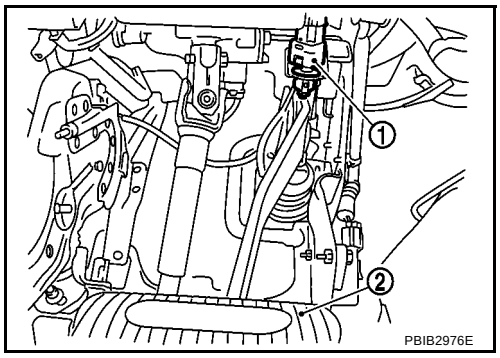

OK or NG

OK >> GO TO 6.
NG >> GO TO 5.

5. DETECT MALFUNCTIONING PART

Check the following.

- Harness connectors M8, M201 (RHD models)
- Harness connectors M1, E101 (RHD models)
- Harness for open and short between stop lamp switch and ECM

>> Repair open circuit or short to ground or short to power in harness connectors.

6. CHECK STOP LAMP SWITCH

Refer to EC-1171, "Component Inspection" .

OK or NG

OK >> GO TO 7.
NG >> Replace stop lamp switch.

7. CHECK INTERMITTENT INCIDENT

Refer to EC-917, "TROUBLE DIAGNOSIS FOR INTERMITTENT INCIDENT" .

>> **INSPECTION END**

Component Inspection

BBS004I1

STOP LAMP SWITCH

1. Turn ignition switch OFF.
2. Disconnect stop lamp switch harness connector.
3. Check continuity between stop lamp switch terminals 1 and 2 under the following conditions.

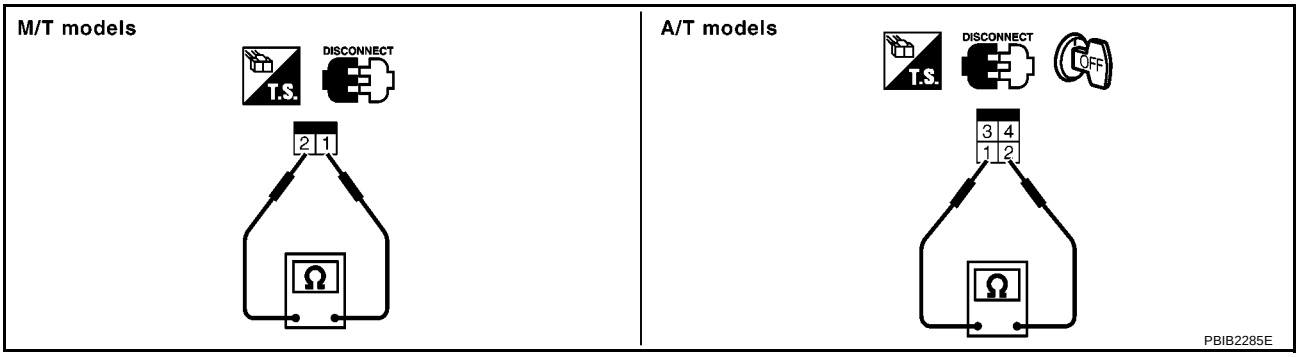

Condition	Continuity
Brake pedal: Fully released.	Should not exist.
Brake pedal: Slightly depressed.	Should exist.

If NG, adjust stop lamp switch installation, refer to BR-6, "BRAKE PEDAL" , and perform step 3 again.

DTC P2122, P2123 APP SENSOR

PFP:18002

Component Description

BBS004I2

The accelerator pedal position sensor is installed on the upper end of the accelerator pedal assembly. The sensor detects the accelerator position and sends a signal to the ECM.
Accelerator pedal position sensor has two sensors. These sensors are a kind of potentiometers which transform the accelerator pedal position into output voltage, and emit the voltage signal to the ECM. In addition, these sensors detect the opening and closing speed of the accelerator pedal and feed the voltage signals to the ECM. The ECM judges the current opening angle of the accelerator pedal from these signals and controls the throttle control motor based on these signals.

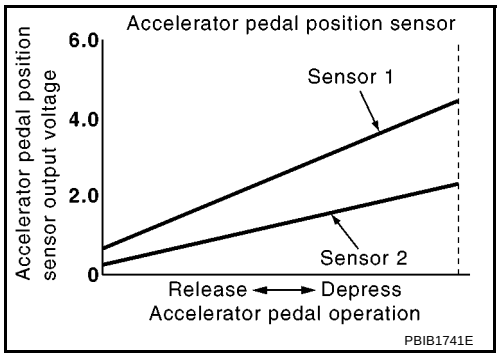

Idle position of the accelerator pedal is determined by the ECM receiving the signal from the accelerator pedal position sensor. The ECM uses this signal for the engine operation such as fuel cut.

CONSULT-II Reference Value in Data Monitor Mode

BBS004I3

Specification data are reference values.

MONITOR ITEM	CONDITION		SPECIFICATION
ACCEL SEN 1	● Ignition switch: ON (Engine stopped)	Accelerator pedal: Fully released	0.6 - 0.9V
		Accelerator pedal: Fully depressed	4.0 - 4.8V
ACCEL SEN 2*	● Ignition switch: ON (Engine stopped)	Accelerator pedal: Fully released	0.6 - 0.9V
		Accelerator pedal: Fully depressed	3.9 - 4.8V
CLSD THL POS	● Ignition switch: ON (Engine stopped)	Accelerator pedal: Fully released	ON
		Accelerator pedal: Slightly depressed	OFF

*: Accelerator pedal position sensor 2 signal is converted by ECM internally. Thus, it differs from ECM terminal voltage.

On Board Diagnosis Logic

BBS004I4

These self-diagnoses have the one trip detection logic.

NOTE:
If DTC P2122 or P2123 is displayed with DTC P1229, first perform the trouble diagnosis for DTC P1229. Refer to EC-1150, "DTC P1229 SENSOR POWER SUPPLY" .

DTC No.	Trouble diagnosis name	DTC detecting condition	Possible cause
P2122 2122	Accelerator pedal position sensor 1 circuit low input	An excessively low voltage from the APP sensor 1 is sent to ECM.	● Harness or connectors (APP sensor 1 circuit is open or shorted.) ● Accelerator pedal position sensor (APP sensor 1)
P2123 2123	Accelerator pedal position sensor 1 circuit high input	An excessively high voltage from the APP sensor 1 is sent to ECM.	

FAIL-SAFE MODE

When the malfunction is detected, ECM enters fail-safe mode and the MI lights up.

Engine operating condition in fail-safe mode
The ECM controls the electric throttle control actuator in regulating the throttle opening in order for the idle position to be within +10 degrees. The ECM regulates the opening speed of the throttle valve to be slower than the normal condition. So, the acceleration will be poor.

DTC Confirmation Procedure

BBS004I5

NOTE:
If DTC Confirmation Procedure has been previously conducted, always turn ignition switch OFF and wait at least 10 seconds before conducting the next test.
TESTING CONDITION:
Before performing the following procedure, confirm that battery voltage is more than 10V at idle.

WITH CONSULT-II

1. Turn ignition switch ON.
2. Select “DATA MONITOR” mode with CONSULT-II.
3. Start engine and let it idle for 1 second.
4. If DTC is detected, go to EC-1177, "Diagnostic Procedure" .

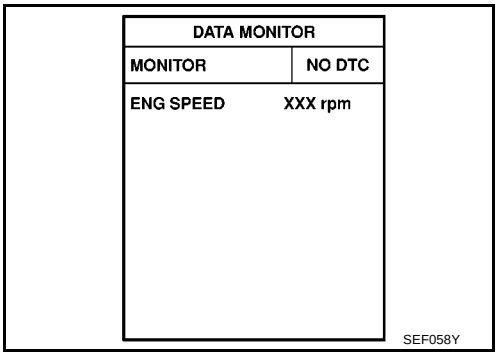

WITH GST

Follow the procedure “WITH CONSULT-II” above.

Wiring Diagram
LHD MODELS

BBS004I6

EC-APPS1-01

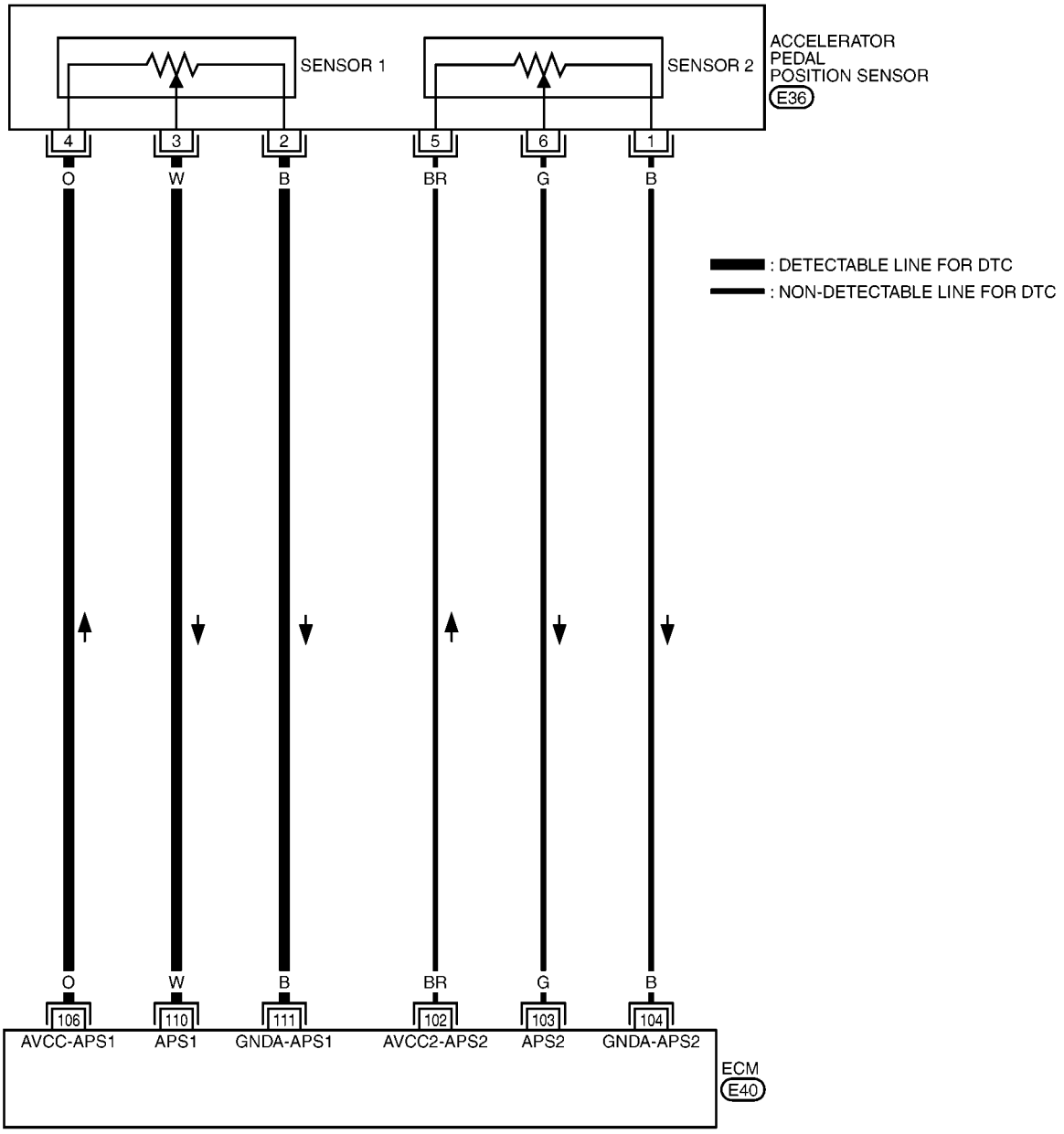

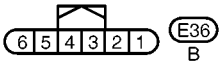

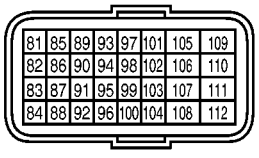

MBWA1482E

Specification data are reference values and are measured between each terminal and ground.

CAUTION:

Do not use ECM ground terminals when measuring input/output voltage. Doing so may result in damage to the ECM's transistor. Use a ground other than ECM terminals, such as the ground.

TERMINAL NO.	WIRE COLOR	ITEM	CONDITION	DATA (DC Voltage)
102	BR	Sensor power supply (APP sensor 2)	**[Ignition switch: ON]**	Approximately 5V
103	G	Accelerator pedal position sensor 2	**[Ignition switch: ON]** ● Engine stopped ● Accelerator pedal: Fully released	0.3 - 0.6V
			[Ignition switch: ON] ● Engine stopped ● Accelerator pedal: Fully depressed	1.95 - 2.4V
104	B	Sensor ground (APP sensor 2)	**[Engine is running]** ● **Warm-up condition** ● Idle speed	Approximately 0V
106	O	Sensor power supply (APP sensor 1)	**[Ignition switch: ON]**	Approximately 5V
110	W	Accelerator pedal position sensor 1	**[Ignition switch: ON]** ● Engine stopped ● Accelerator pedal: Fully released	0.6 - 0.9V
			[Ignition switch: ON] ● Engine stopped ● Accelerator pedal: Fully depressed	3.9 - 4.7V
111	B	Sensor ground (APP sensor 1)	**[Engine is running]** ● **Warm-up condition** ● Idle speed	Approximately 0V

RHD MODELS

EC-APPS1-02

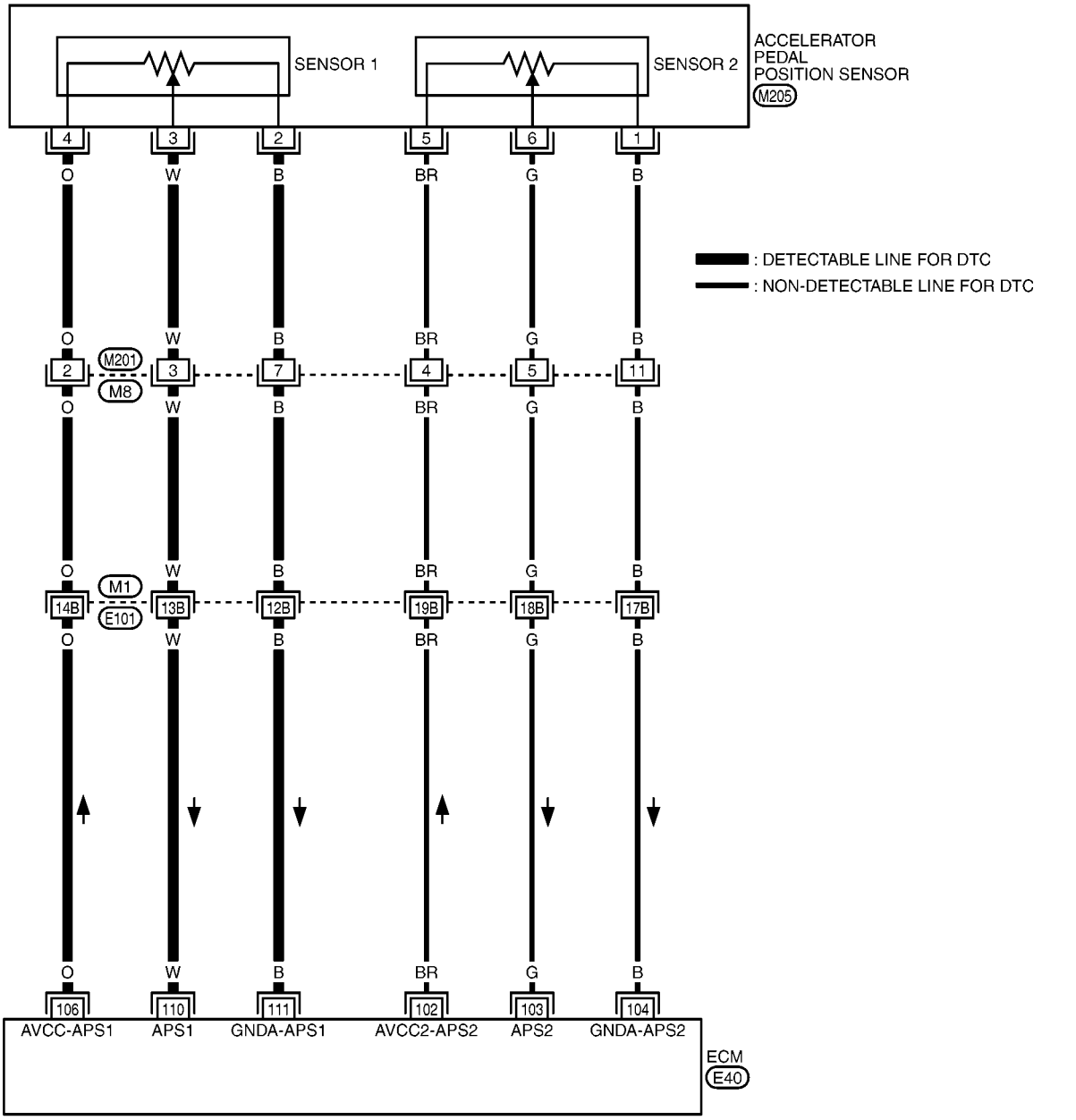

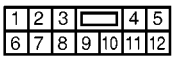

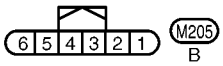

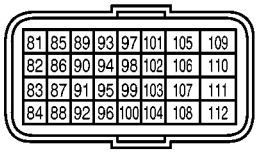

REFER TO THE FOLLOWING.
M1 - SUPER MULTIPLE JUNCTION (SMJ)

MBWA1483E

Specification data are reference values and are measured between each terminal and ground.

CAUTION:
Do not use ECM ground terminals when measuring input/output voltage. Doing so may result in damage to the ECM's transistor. Use a ground other than ECM terminals, such as the ground.

TERMINAL NO.	WIRE COLOR	ITEM	CONDITION	DATA (DC Voltage)
102	BR	Sensor power supply (APP sensor 2)	**[Ignition switch: ON]**	Approximately 5V
103	G	Accelerator pedal position sensor 2	**[Ignition switch: ON]** ● Engine stopped ● Accelerator pedal: Fully released	0.3 - 0.6V
			[Ignition switch: ON] ● Engine stopped ● Accelerator pedal: Fully depressed	1.95 - 2.4V
104	B	Sensor ground (APP sensor 2)	**[Engine is running]** ● **Warm-up condition** ● Idle speed	Approximately 0V
106	O	Sensor power supply (APP sensor 1)	**[Ignition switch: ON]**	Approximately 5V
110	W	Accelerator pedal position sensor 1	**[Ignition switch: ON]** ● Engine stopped ● Accelerator pedal: Fully released	0.6 - 0.9V
			[Ignition switch: ON] ● Engine stopped ● Accelerator pedal: Fully depressed	3.9 - 4.7V
111	B	Sensor ground (APP sensor 1)	**[Engine is running]** ● **Warm-up condition** ● Idle speed	Approximately 0V

Diagnostic Procedure

BBS004I7

1. CHECK GROUND CONNECTIONS

1. Turn ignition switch OFF.
2. Loosen and retighten ground screws on the body.
   Refer to EC-924, "Ground Inspection" .

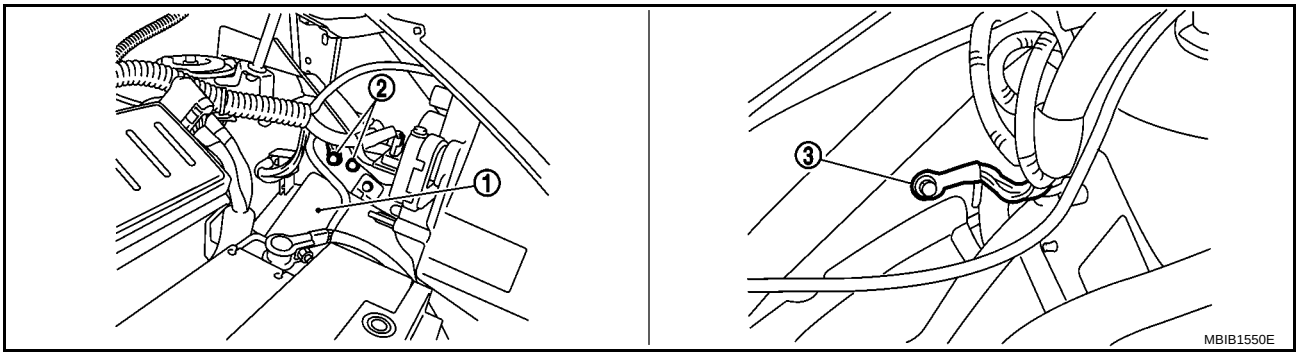

1. IPDM E/R
2. Body ground
3. Body ground

OK or NG

OK >> GO TO 2.
NG >> Repair or replace ground connections.

2. CHECK APP SENSOR 1 POWER SUPPLY CIRCUIT

1. Disconnect accelerator pedal position (APP) sensor harness connector (1).
- Accelerator pedal position sensor (2)
- Accelerator pedal (3)
2. Turn ignition switch ON.

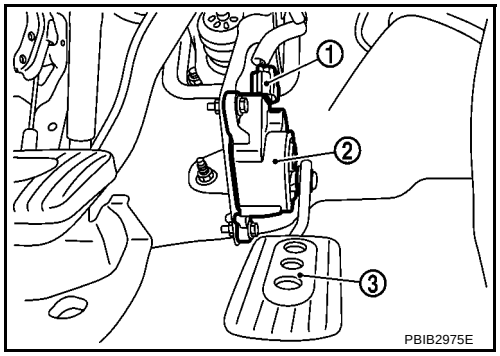

3. Check voltage between APP sensor terminal 4 and ground with CONSULT-II or tester.

Voltage: Approximately 5V

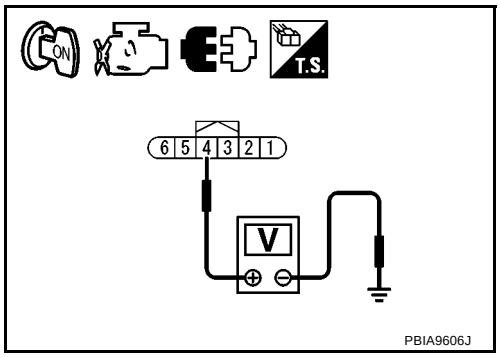

OK or NG

OK >> GO TO 4.
NG >> GO TO 3.

3. DETECT MALFUNCTIONING PART

Check the following.
- Harness connectors M201, M8 (RHD models)
- Harness connectors M1, E101 (RHD models)
- Harness for open or short between APP sensor and ECM

>> Repair open circuit or short to ground or short to power in harness or connectors.

4. CHECK APP SENSOR 1 GROUND CIRCUIT FOR OPEN AND SHORT

1. Turn ignition switch OFF.
2. Disconnect ECM harness connector.
3. Check harness continuity between ECM terminal 111 and APP sensor terminal 2.
Refer to Wiring Diagram.

Continuity should exist.

4. Also check harness for short to ground and short to power.

OK or NG

OK >> GO TO 6.
NG >> GO TO 5.

5. DETECT MALFUNCTIONING PART

Check the following.
- Harness connectors M201, M8 (RHD models)
- Harness connectors M1, E101 (RHD models)
- Harness for open or short between APP sensor and ECM

>> Repair open circuit or short to ground or short to power in harness or connectors.

6. CHECK APP SENSOR 1 INPUT SIGNAL CIRCUIT FOR OPEN AND SHORT

1. Check harness continuity between ECM terminal 110 and APP sensor terminal 3.
   Refer to Wiring Diagram.

   Continuity should exist.

2. Also check harness for short to ground and short to power.

OK or NG

OK >> GO TO 8.
NG >> GO TO 7.

7. DETECT MALFUNCTIONING PART

Check the following.

- Harness connectors M201, M8 (RHD models)
- Harness connectors M1, E101 (RHD models)
- Harness for open or short between APP sensor and ECM

>> Repair open circuit or short to ground or short to power in harness or connectors.

8. CHECK APP SENSOR

Refer to EC-1180, "Component Inspection" .

OK or NG

OK >> GO TO 10.
NG >> GO TO 9.

9. REPLACE ACCELERATOR PEDAL ASSEMBLY

1. Replace accelerator pedal assembly.
2. Perform EC-857, "Accelerator Pedal Released Position Learning" .
3. Perform EC-857, "Throttle Valve Closed Position Learning" .
4. Perform EC-858, "Idle Air Volume Learning" .

>> **INSPECTION END**

10. CHECK INTERMITTENT INCIDENT

Refer to EC-917, "TROUBLE DIAGNOSIS FOR INTERMITTENT INCIDENT" .

>> **INSPECTION END**

Component Inspection

BBS004I8

ACCELERATOR PEDAL POSITION SENSOR

1. Reconnect all harness connectors disconnected.
2. Turn ignition switch ON.
3. Check voltage between ECM terminals 110 (APP sensor 1 signal), 103 (APP sensor 2 signal) and ground under the following conditions.

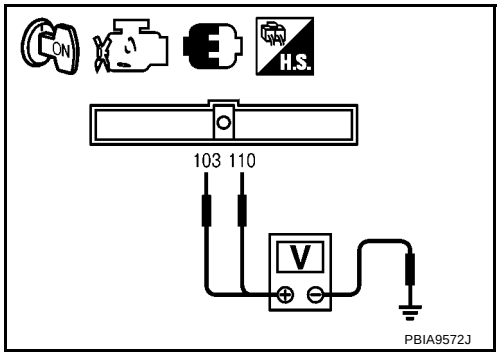

Terminal	Accelerator pedal	Voltage
110 (Accelerator pedal position sensor 1)	Fully released	0.6 - 0.9V
	Fully depressed	3.9 - 4.7V
103 (Accelerator pedal position sensor 2)	Fully released	0.3 - 0.6V
	Fully depressed	1.95 - 2.4V

4. If NG, replace accelerator pedal assembly and go to next step.
5. Perform EC-857, "Accelerator Pedal Released Position Learning" .
6. Perform EC-857, "Throttle Valve Closed Position Learning" .
7. Perform EC-858, "Idle Air Volume Learning" .

Removal and Installation

BBS004I9

ACCELERATOR PEDAL

Refer to ACC-2, "ACCELERATOR CONTROL SYSTEM" .

DTC P2127, P2128 APP SENSOR

PFP:18002

Component Description

BBS004IA

The accelerator pedal position sensor is installed on the upper end of the accelerator pedal assembly. The sensor detects the accelerator position and sends a signal to the ECM.
Accelerator pedal position sensor has two sensors. These sensors are a kind of potentiometers which transform the accelerator pedal position into output voltage, and emit the voltage signal to the ECM. In addition, these sensors detect the opening and closing speed of the accelerator pedal and feed the voltage signals to the ECM. The ECM judges the current opening angle of the accelerator pedal from these signals and controls the throttle control motor based on these signals.

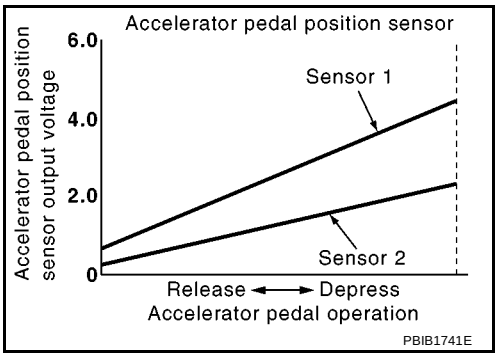

Idle position of the accelerator pedal is determined by the ECM receiving the signal from the accelerator pedal position sensor. The ECM uses this signal for the engine operation such as fuel cut.

CONSULT-II Reference Value in Data Monitor Mode

BBS004IB

Specification data are reference values.

MONITOR ITEM	CONDITION		SPECIFICATION
ACCEL SEN 1	● Ignition switch: ON (Engine stopped)	Accelerator pedal: Fully released	0.6 - 0.9V
		Accelerator pedal: Fully depressed	4.0 - 4.8V
ACCEL SEN 2*	● Ignition switch: ON (Engine stopped)	Accelerator pedal: Fully released	0.6 - 0.9V
		Accelerator pedal: Fully depressed	3.9 - 4.8V
CLSD THL POS	● Ignition switch: ON (Engine stopped)	Accelerator pedal: Fully released	ON
		Accelerator pedal: Slightly depressed	OFF

*: Accelerator pedal position sensor 2 signal is converted by ECM internally. Thus, it differs from ECM terminal voltage.

On Board Diagnosis Logic

BBS004IC

These self-diagnoses have the one trip detection logic.

DTC No.	Trouble diagnosis name	DTC detecting condition	Possible cause
P2127 2127	Accelerator pedal position sensor 2 circuit low input	An excessively low voltage from the APP sensor 2 is sent to ECM.	● Harness or connectors (APP sensor 2 circuit is open or shorted.) [Crankshaft position sensor (POS) circuit is shorted.] (Refrigerant pressure sensor circuit is shorted.) ● Accelerator pedal position sensor (APP sensor 2) ● Crankshaft position sensor (POS) ● Refrigerant pressure sensor
P2128 2128	Accelerator pedal position sensor 2 circuit high input	An excessively high voltage from the APP sensor 2 is sent to ECM.	

FAIL-SAFE MODE

When the malfunction is detected, ECM enters fail-safe mode and the MI lights up.

Engine operating condition in fail-safe mode
The ECM controls the electric throttle control actuator in regulating the throttle opening in order for the idle position to be within +10 degrees. The ECM regulates the opening speed of the throttle valve to be slower than the normal condition. So, the acceleration will be poor.

DTC Confirmation Procedure

BBS004ID

NOTE:
If DTC Confirmation Procedure has been previously conducted, always turn ignition switch OFF and wait at least 10 seconds before conducting the next test.
TESTING CONDITION:
Before performing the following procedure, confirm that battery voltage is more than 10V at idle.

WITH CONSULT-II

1. Turn ignition switch ON.
2. Select “DATA MONITOR” mode with CONSULT-II.
3. Start engine and let it idle for 1 second.
4. If DTC is detected, go to EC-1187, "Diagnostic Procedure" .

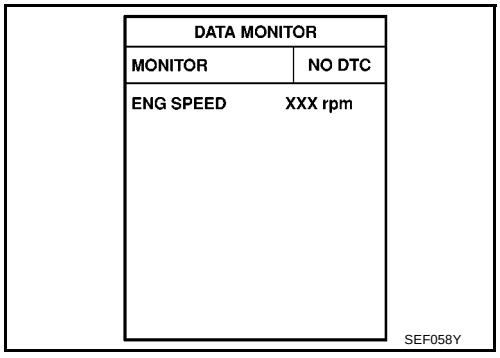

WITH GST

Follow the procedure “WITH CONSULT-II” above.

Wiring Diagram
LHD MODELS

BBS004IE

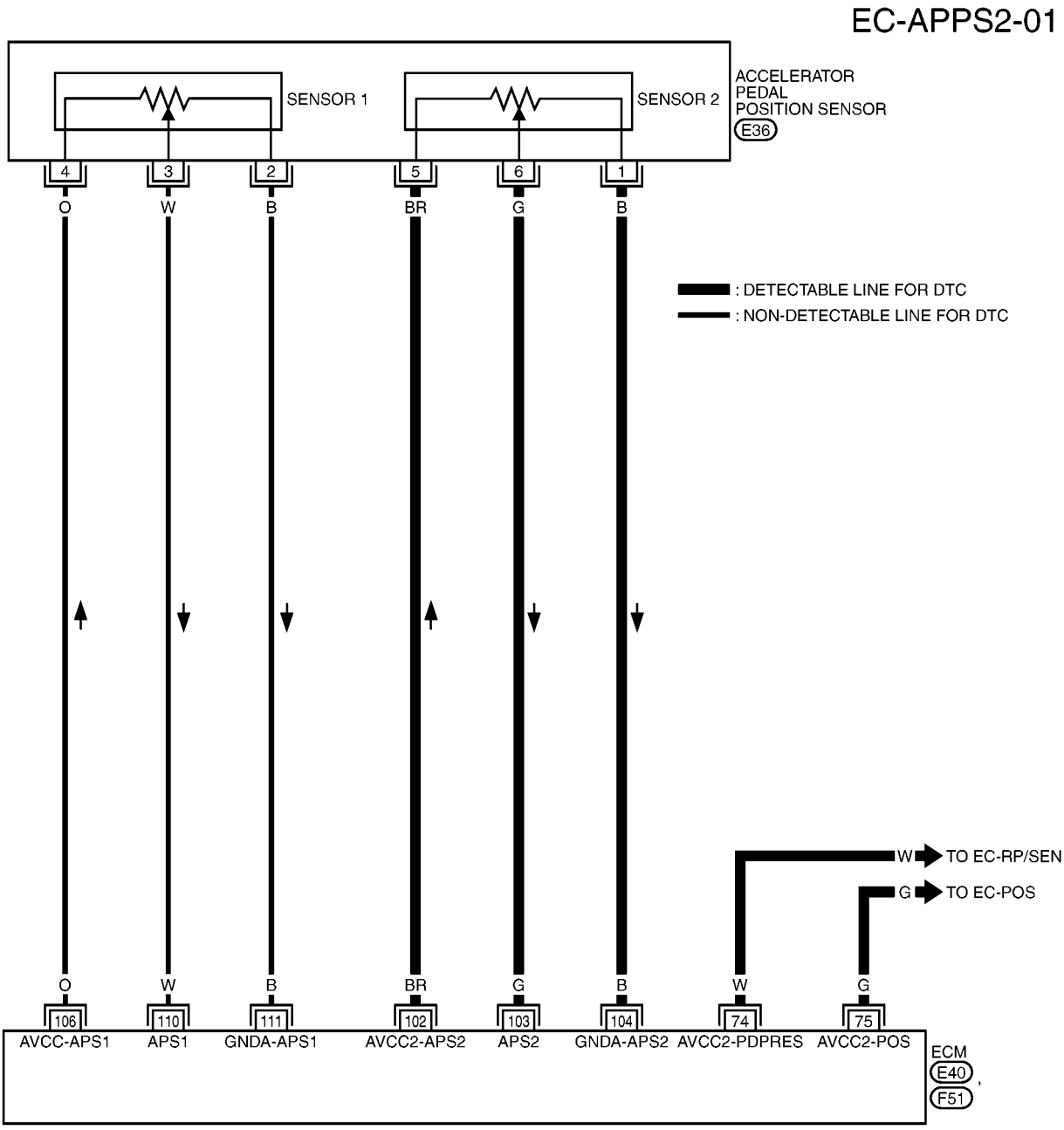

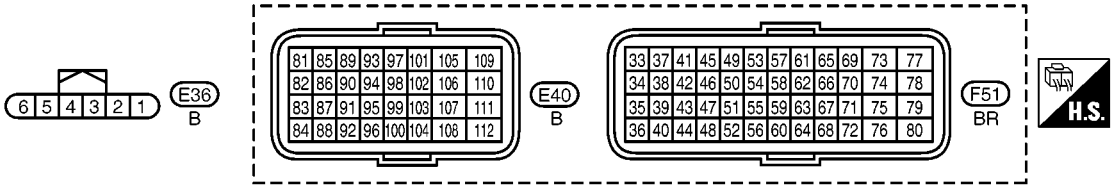

MBWA1484E

Specification data are reference values and are measured between each terminal and ground.

CAUTION:

Do not use ECM ground terminals when measuring input/output voltage. Doing so may result in damage to the ECM's transistor. Use a ground other than ECM terminals, such as the ground.

TERMINAL NO.	WIRE COLOR	ITEM	CONDITION	DATA (DC Voltage)
74	W	Sensor power supply (Refrigerant pressure sensor)	**[Ignition switch: ON]**	Approximately 5V
75	G	Sensor power supply [Crankshaft position sensor (POS)]	**[Ignition switch: ON]**	Approximately 5V
102	B	Sensor power supply (APP sensor 2)	**[Ignition switch: ON]**	Approximately 5V
103	G	Accelerator pedal position sensor 2	**[Ignition switch: ON]** ● Engine stopped ● Accelerator pedal: Fully released	0.3 - 0.6V
			[Ignition switch: ON] ● Engine stopped ● Accelerator pedal: Fully depressed	1.95 - 2.4V
104	B	Sensor ground (APP sensor 2)	**[Engine is running]** ● **Warm-up condition** ● Idle speed	Approximately 0V
106	O	Sensor power supply (APP sensor 1)	**[Ignition switch: ON]**	Approximately 5V
110	W	Accelerator pedal position sensor 1	**[Ignition switch: ON]** ● Engine stopped ● Accelerator pedal: Fully released	0.6 - 0.9V
			[Ignition switch: ON] ● Engine stopped ● Accelerator pedal: Fully depressed	3.9 - 4.7V
111	B	Sensor ground (APP sensor 1)	**[Engine is running]** ● **Warm-up condition** ● Idle speed	Approximately 0V

RHD MODELS

EC-APPS2-02

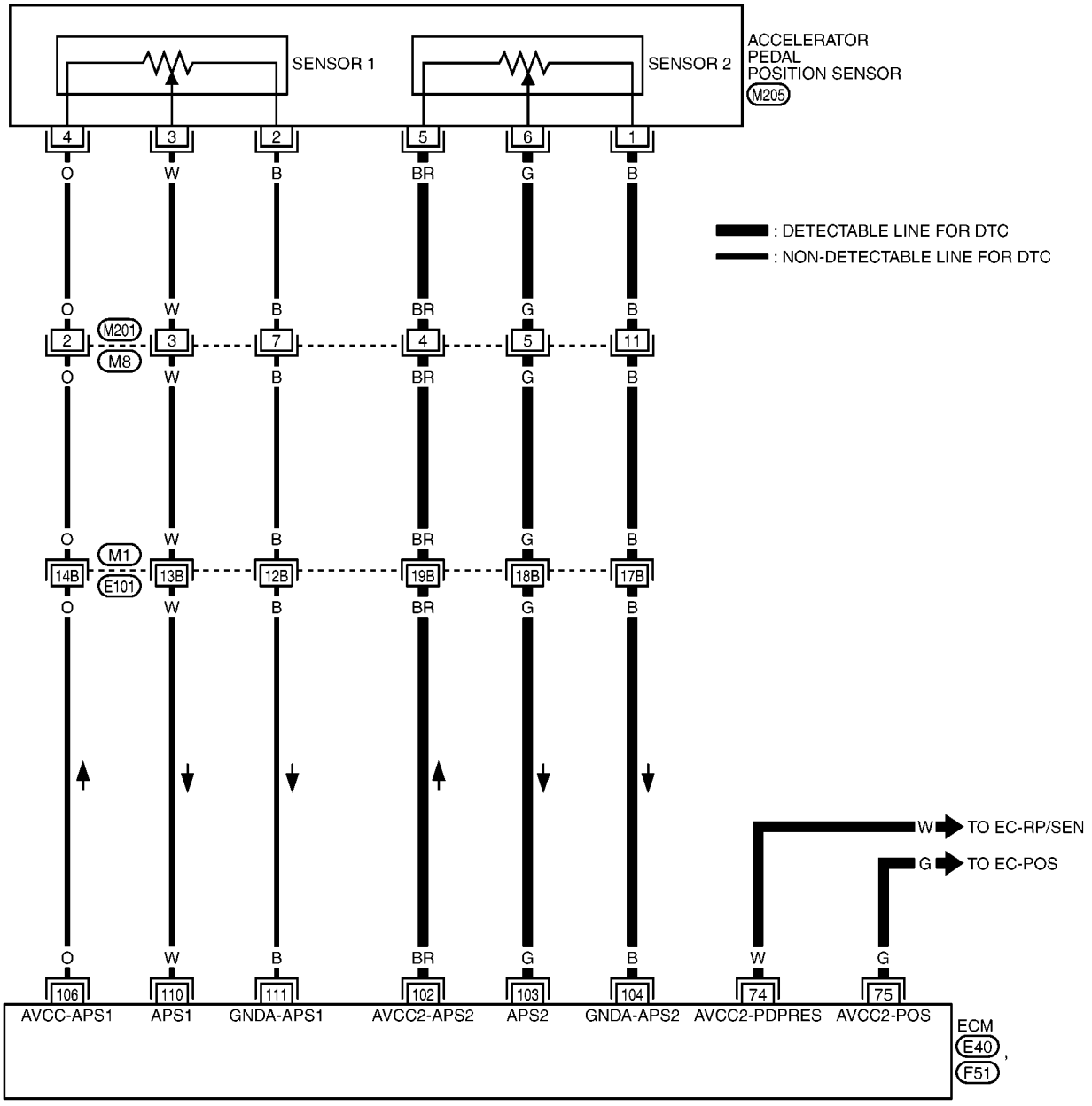

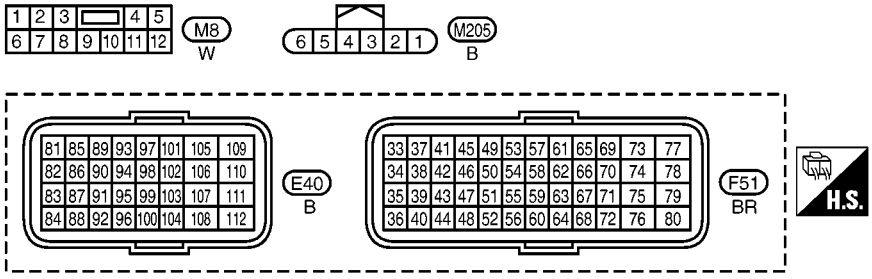

REFER TO THE FOLLOWING.
M1 - SUPER MULTIPLE JUNCTION (SMJ)

MBWA1485E

Specification data are reference values and are measured between each terminal and ground.

CAUTION:

Do not use ECM ground terminals when measuring input/output voltage. Doing so may result in damage to the ECM's transistor. Use a ground other than ECM terminals, such as the ground.

TERMINAL NO.	WIRE COLOR	ITEM	CONDITION	DATA (DC Voltage)
74	W	Sensor power supply (Refrigerant pressure sensor)	**[Ignition switch: ON]**	Approximately 5V
75	G	Sensor power supply [Crankshaft position sensor (POS)]	**[Ignition switch: ON]**	Approximately 5V
102	B	Sensor power supply (APP sensor 2)	**[Ignition switch: ON]**	Approximately 5V
103	G	Accelerator pedal position sensor 2	**[Ignition switch: ON]** ● Engine stopped ● Accelerator pedal: Fully released	0.3 - 0.6V
			[Ignition switch: ON] ● Engine stopped ● Accelerator pedal: Fully depressed	1.95 - 2.4V
104	B	Sensor ground (APP sensor 2)	**[Engine is running]** ● **Warm-up condition** ● Idle speed	Approximately 0V
106	O	Sensor power supply (APP sensor 1)	**[Ignition switch: ON]**	Approximately 5V
110	W	Accelerator pedal position sensor 1	**[Ignition switch: ON]** ● Engine stopped ● Accelerator pedal: Fully released	0.6 - 0.9V
			[Ignition switch: ON] ● Engine stopped ● Accelerator pedal: Fully depressed	3.9 - 4.7V
111	B	Sensor ground (APP sensor 1)	**[Engine is running]** ● **Warm-up condition** ● Idle speed	Approximately 0V

Diagnostic Procedure

BBS004IF

1. CHECK GROUND CONNECTIONS

1. Turn ignition switch OFF.
2. Loosen and retighten ground screws on the body.
   Refer to EC-924, "Ground Inspection" .

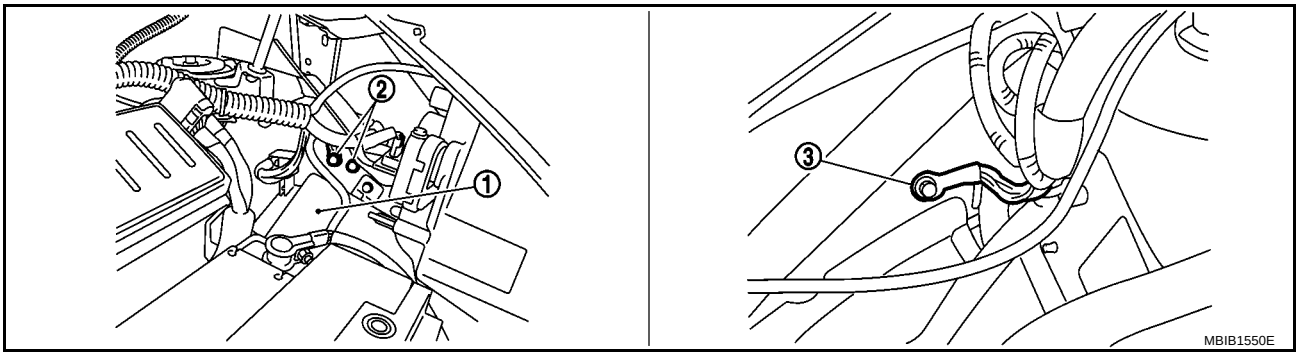

1. IPDM E/R
2. Body ground
3. Body ground

OK or NG

OK >> GO TO 2.
NG >> Repair or replace ground connections.

2. CHECK APP SENSOR 2 POWER SUPPLY CIRCUIT-I

1. Disconnect accelerator pedal position (APP) sensor harness connector (1).
   - Accelerator pedal position sensor (2)
   - Accelerator pedal (3)
2. Turn ignition switch ON.

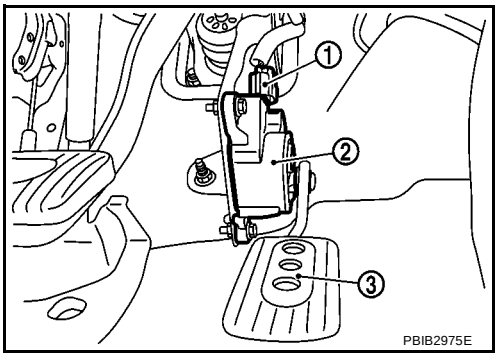

3. Check voltage between APP sensor terminal 5 and ground with CONSULT-II or tester.

   Voltage: Approximately 5V

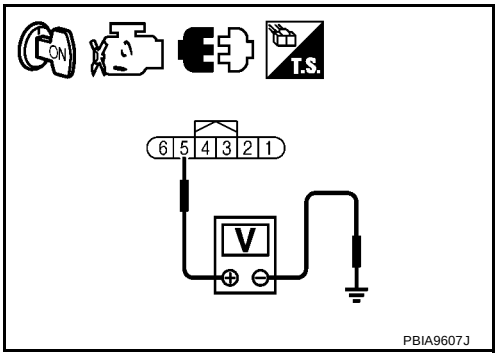

OK or NG

OK >> GO TO 7.
NG >> GO TO 3.

3. CHECK APP SENSOR 2 POWER SUPPLY CIRCUIT-II

1. Turn ignition switch OFF.
2. Disconnect ECM harness connector.
3. Check harness continuity between APP sensor terminal 5 and ECM terminal 102.
   Refer to Wiring Diagram.

Continuity should exist.

OK or NG

OK >> GO TO 5.
NG >> GO TO 4.

4. DETECT MALFUNCTIONING PART

Check the following.

- Harness connectors M201, M8 (RHD models)
- Harness connectors M1, E101 (RHD models)
- Harness for open or short between APP sensor and ECM

>> Repair open circuit in harness or connectors.

5. CHECK APP SENSOR 2 POWER SUPPLY CIRCUIT-III

Check harness for short to power and short to ground, between the following terminals.

ECM terminal	Sensor terminal	Reference Wiring Diagram
74	Refrigerant pressure sensor terminal 3	EC-1232, "Wiring Diagram"
75	Crankshaft position sensor (POS) terminal 1	EC-1044, "Wiring Diagram"
102	APP sensor terminal 5	EC-1183, "Wiring Diagram"

OK or NG

OK >> GO TO 6.
NG >> Repair short to ground or short to power in harness or connectors.

6. CHECK COMPONENTS

Check the following.

- Crankshaft position sensor (POS) (Refer to EC-1048, "Component Inspection" .)
- Refrigerant pressure sensor (Refer to ATC-85, "Refrigerant Pressure Sensor" .)

OK or NG

OK >> GO TO 13.
NG >> Replace malfunctioning component.

7. CHECK APP SENSOR 2 GROUND CIRCUIT FOR OPEN AND SHORT

1. Turn ignition switch OFF.
2. Disconnect ECM harness connector.
3. Check harness continuity between ECM terminal 104 and APP sensor terminal 1.
   Refer to Wiring Diagram.

Continuity should exist.

4. Also check harness for short to ground and short to power.

OK or NG

OK >> GO TO 9.
NG >> GO TO 8.

8. DETECT MALFUNCTIONING PART

Check the following.

- Harness connectors M201, M8 (RHD models)
- Harness connectors M1, E101 (RHD models)
- Harness for open or short between APP sensor and ECM

>> Repair open circuit or short to ground or short to power in harness or connectors.

9. CHECK APP SENSOR 2 INPUT SIGNAL CIRCUIT FOR OPEN AND SHORT

1. Check harness continuity between ECM terminal 103 and APP sensor terminal 6.
   Refer to Wiring Diagram.

   Continuity should exist.

2. Also check harness for short to ground and short to power.

OK or NG

OK >> GO TO 11.
NG >> GO TO 10.

10. DETECT MALFUNCTIONING PART

Check the following.

- Harness connectors M201, M8 (RHD models)
- Harness connectors M1, E101 (RHD models)
- Harness for open or short between APP sensor and ECM

>> Repair open circuit or short to ground or short to power in harness or connectors.

11. CHECK APP SENSOR

Refer to EC-1190, "Component Inspection" .

OK or NG

OK >> GO TO 13.
NG >> GO TO 12.

12. REPLACE ACCELERATOR PEDAL ASSEMBLY

1. Replace accelerator pedal assembly.
2. Perform EC-857, "Accelerator Pedal Released Position Learning" .
3. Perform EC-857, "Throttle Valve Closed Position Learning" .
4. Perform EC-858, "Idle Air Volume Learning" .

>> **INSPECTION END**

13. CHECK INTERMITTENT INCIDENT

Refer to EC-917, "TROUBLE DIAGNOSIS FOR INTERMITTENT INCIDENT" .

>> **INSPECTION END**

Component Inspection

BBS004IG

ACCELERATOR PEDAL POSITION SENSOR

1. Reconnect all harness connectors disconnected.
2. Turn ignition switch ON.
3. Check voltage between ECM terminals 110 (APP sensor 1 signal), 103 (APP sensor 2 signal) and ground under the following conditions.

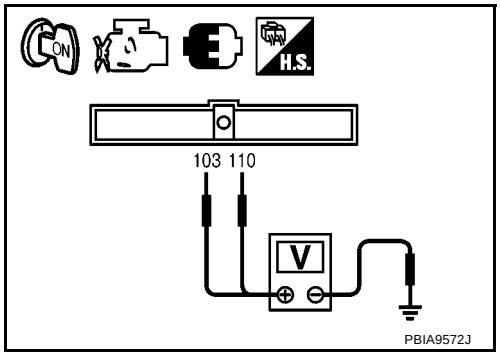

Terminal	Accelerator pedal	Voltage
110 (Accelerator pedal position sensor 1)	Fully released	0.6 - 0.9V
	Fully depressed	3.9 - 4.7V
103 (Accelerator pedal position sensor 2)	Fully released	0.3 - 0.6V
	Fully depressed	1.95 - 2.4V

4. If NG, replace accelerator pedal assembly and go to next step.
5. Perform EC-857, "Accelerator Pedal Released Position Learning" .
6. Perform EC-857, "Throttle Valve Closed Position Learning" .
7. Perform EC-858, "Idle Air Volume Learning" .

Removal and Installation

BBS004IH

ACCELERATOR PEDAL

Refer to ACC-2, "ACCELERATOR CONTROL SYSTEM" .

DTC P2135 TP SENSOR

PFP:16119

Component Description

BBS004II

Electric throttle control actuator consists of throttle control motor, throttle position sensor, etc. The throttle position sensor responds to the throttle valve movement.
The throttle position sensor has the two sensors. These sensors are a kind of potentiometers which transform the throttle valve position into output voltage, and emit the voltage signal to the ECM. In addition, these sensors detect the opening and closing speed of the throttle valve and feed the voltage signals to the ECM. The ECM judges the current opening angle of the throttle valve from these signals and the ECM controls the throttle control motor to make the throttle valve opening angle properly in response to driving condition.

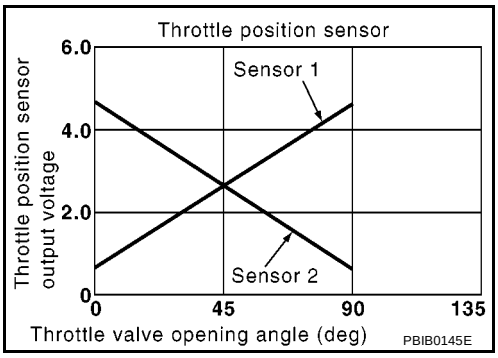

CONSULT-II Reference Value in Data Monitor Mode

BBS004IJ

Specification data are reference values.

MONITOR ITEM	CONDITION		SPECIFICATION
THRTL SEN 1 THRTL SEN 2*	● Ignition switch: ON (Engine stopped)	Accelerator pedal: Fully released	More than 0.36V
	● Shift lever: D (A/T), 1st (M/T)	Accelerator pedal: Fully depressed	Less than 4.75V

*: Throttle position sensor 2 signal is converted by ECM internally. Thus, it differs from ECM terminal voltage signal.

On Board Diagnosis Logic

BBS004IK

This self-diagnosis has the one trip detection logic.

NOTE:
If DTC P2135 is displayed with DTC P1229, first perform the trouble diagnosis for DTC P1229. Refer to **EC-1150, "DTC P1229 SENSOR POWER SUPPLY"** **.**

DTC No.	Trouble diagnosis name	DTC detecting condition	Possible cause
P2135 2135	Throttle position sensor circuit range/performance	Rationally incorrect voltage is sent to ECM compared with the signals from TP sensor 1 and TP sensor 2.	● Harness or connector (TP sensor 1 and 2 circuit is open or shorted.) ● Electric throttle control actuator (TP sensor 1 and 2)

FAIL-SAFE MODE

When the malfunction is detected, the ECM enters fail-safe mode and the MI lights up.

Engine operation condition in fail-safe mode
The ECM controls the electric throttle control actuator in regulating the throttle opening in order for the idle position to be within +10 degrees. The ECM regulates the opening speed of the throttle valve to be slower than the normal condition. So, the acceleration will be poor.

DTC Confirmation Procedure

BBS004IL

NOTE:
If DTC Confirmation Procedure has been previously conducted, always turn ignition switch OFF and wait at least 10 seconds before conducting the next test.
TESTING CONDITION:
Before performing the following procedure, confirm that battery voltage is more than 10V at idle.

WITH CONSULT-II

1. Turn ignition switch ON.
2. Select “DATA MONITOR” mode with CONSULT-II.
3. Start engine and let it idle for 1 second.
4. If DTC is detected, go to EC-1194, "Diagnostic Procedure" .

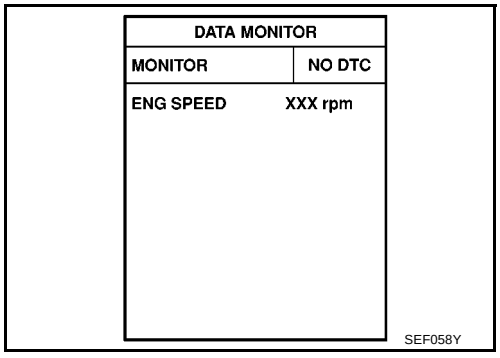

WITH GST

Follow the procedure “WITH CONSULT-II” above.

Wiring Diagram

BBS004IM

EC-TPS3-01

: DETECTABLE LINE FOR DTC
: NON-DETECTABLE LINE FOR DTC

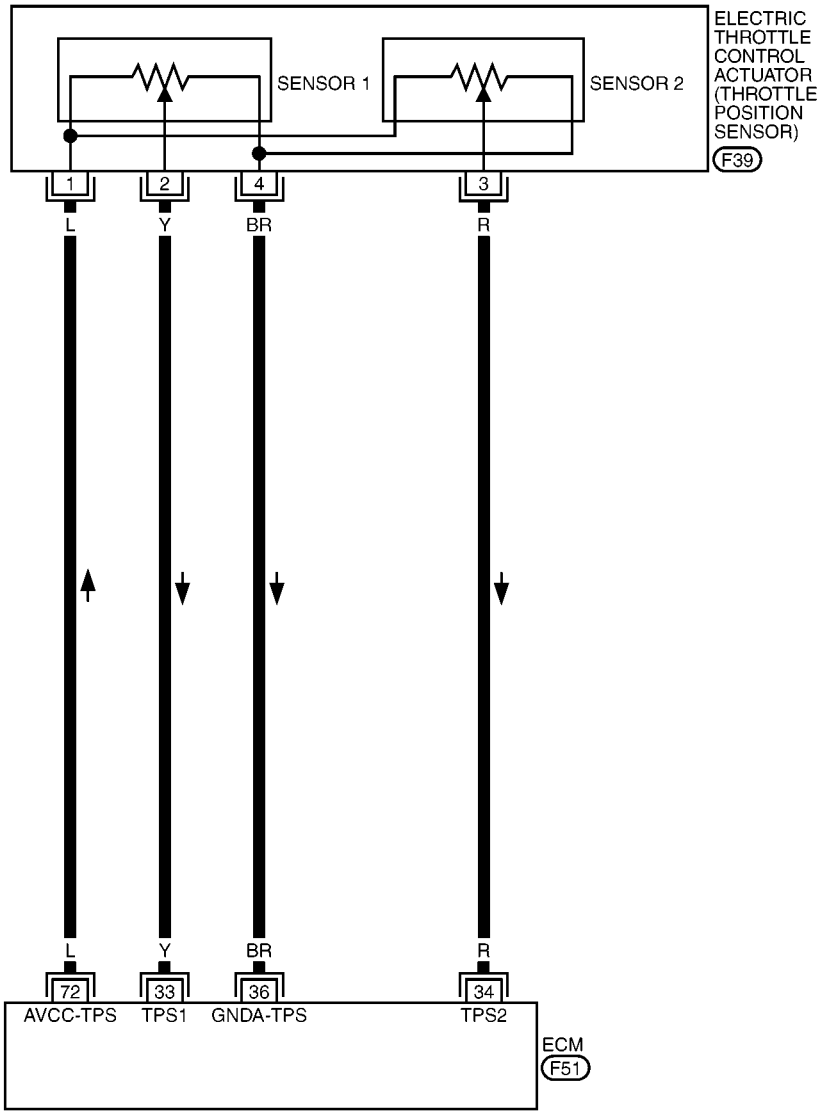

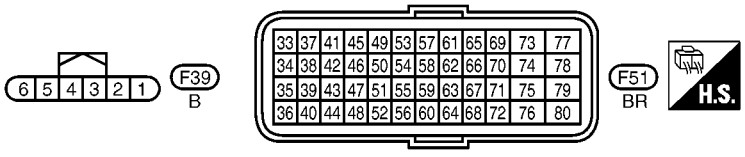

MBWA1486E

Specification data are reference values and are measured between each terminal and ground.

CAUTION:

Do not use ECM ground terminals when measuring input/output voltage. Doing so may result in damage to the ECM's transistor. Use a ground other than ECM terminals, such as the ground.

TERMINAL NO.	WIRE COLOR	ITEM	CONDITION	DATA (DC Voltage)
33	Y	Throttle position sensor 1	**[Ignition switch: ON]** ● Engine stopped ● Shift lever: D (A/T), 1st (M/T) ● Accelerator pedal: Fully released	More than 0.36V
			[Ignition switch: ON] ● Engine stopped ● Shift lever: D (A/T), 1st (M/T) ● Accelerator pedal: Fully depressed	Less than 4.75V
34	R	Throttle position sensor 2	**[Ignition switch: ON]** ● Engine stopped ● Shift lever: D (A/T), 1st (M/T) ● Accelerator pedal: Fully released	Less than 4.75V
			[Ignition switch: ON] ● Engine stopped ● Shift lever: D (A/T), 1st (M/T) ● Accelerator pedal: Fully depressed	More than 0.36V
36	BR	Sensor ground (Throttle position sensor)	**[Engine is running]** ● **Warm-up condition** ● Idle speed	Approximately 0V
72	L	Sensor power supply (Throttle position sensor)	**[Ignition switch: ON]**	Approximately 5V

Diagnostic Procedure

BBS004IN

1. CHECK GROUND CONNECTIONS

1. Turn ignition switch OFF.
2. Loosen and retighten ground screws on the body.
   Refer to EC-924, "Ground Inspection" .

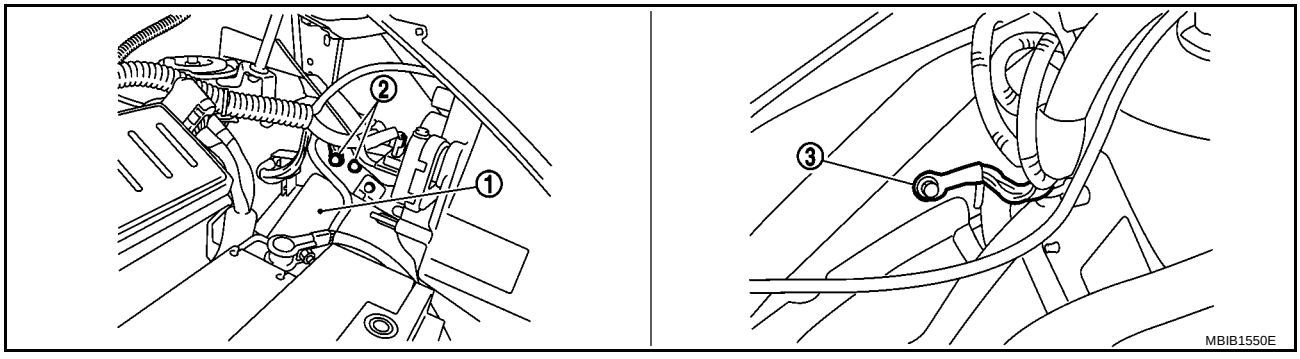

1. IPDM E/R
2. Body ground
3. Body ground

OK or NG

OK >> GO TO 2.
NG >> Repair or replace ground connections.

2. CHECK THROTTLE POSITION SENSOR POWER SUPPLY CIRCUIT

1. Disconnect electric throttle control actuator (1) harness connector.
   ⇦: Vehicle front
2. Turn ignition switch ON.

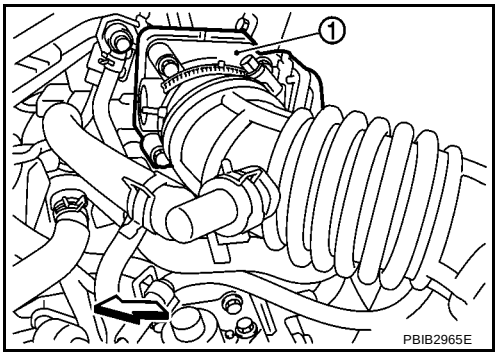

3. Check voltage between electric throttle control actuator terminal 1 and ground with CONSULT-II or tester.

   Voltage: Approximately 5V

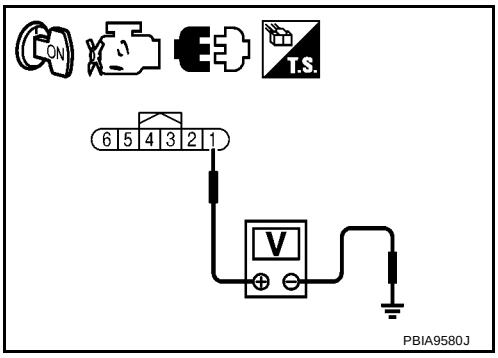

OK or NG

OK >> GO TO 3.
NG >> Repair open circuit or short to ground or short to power in harness or connectors.

3. CHECK THROTTLE POSITION SENSOR GROUND CIRCUIT FOR OPEN AND SHORT

1. Turn ignition switch OFF.
2. Disconnect ECM harness connector.
3. Check harness continuity between electric throttle control actuator terminal 4 and ECM terminal 36.
   Refer to Wiring Diagram.

   Continuity should exist.

4. Also check harness for short to ground and short to power.

OK or NG

OK >> GO TO 4.
NG >> Repair open circuit or short to ground or short to power in harness or connectors.

4. CHECK THROTTLE POSITION SENSOR INPUT SIGNAL CIRCUIT FOR OPEN AND SHORT

1. Check harness continuity between electric throttle control actuator terminal 2 and ECM terminal 33, electric throttle control actuator terminal 3 and ECM terminal 34.
   Refer to Wiring Diagram.

   Continuity should exist.

2. Also check harness for short to ground and short to power.

OK or NG

OK >> GO TO 5.
NG >> Repair open circuit or short to ground or short to power in harness or connectors.

5. CHECK THROTTLE POSITION SENSOR

Refer to EC-1196, "Component Inspection" .

OK or NG

OK >> GO TO 7.
NG >> GO TO 6.

6. REPLACE ELECTRIC THROTTLE CONTROL ACTUATOR

1. Replace the electric throttle control actuator.
2. Perform EC-857, "Throttle Valve Closed Position Learning" .
3. Perform EC-858, "Idle Air Volume Learning" .

>> **INSPECTION END**

7. CHECK INTERMITTENT INCIDENT

Refer to EC-917, "TROUBLE DIAGNOSIS FOR INTERMITTENT INCIDENT" .

>> **INSPECTION END**

Component Inspection

BBS004IO

THROTTLE POSITION SENSOR

1. Reconnect all harness connectors disconnected.
2. Perform EC-857, "Throttle Valve Closed Position Learning" .
3. Turn ignition switch ON.
4. Set shift lever to D position (A/T) or 1st position (M/T).
5. Check voltage between ECM terminals 33 (TP sensor 1 signal), 34 (TP sensor 2 signal) and ground under the following conditions.

Terminal	Accelerator pedal	Voltage
33 (Throttle position sensor 1)	Fully released	More than 0.36V
	Fully depressed	Less than 4.75V
34 (Throttle position sensor 2)	Fully released	Less than 4.75V
	Fully depressed	More than 0.36V

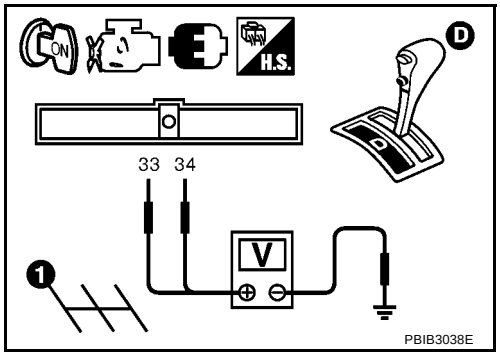

6. If NG, replace electric throttle control actuator and go to the next step.
7. Perform EC-857, "Throttle Valve Closed Position Learning" .
8. Perform EC-858, "Idle Air Volume Learning" .

Removal and Installation

BBS004IP

ELECTRIC THROTTLE CONTROL ACTUATOR

Refer to EM-120, "INTAKE MANIFOLD" .

DTC P2138 APP SENSOR

PFP:18002

Component Description

BBS004IQ

The accelerator pedal position sensor is installed on the upper end of the accelerator pedal assembly. The sensor detects the accelerator position and sends a signal to the ECM.
Accelerator pedal position sensor has two sensors. These sensors are a kind of potentiometers which transform the accelerator pedal position into output voltage, and emit the voltage signal to the ECM. In addition, these sensors detect the opening and closing speed of the accelerator pedal and feed the voltage signals to the ECM. The ECM judges the current opening angle of the accelerator pedal from these signals and controls the throttle control motor based on these signals.

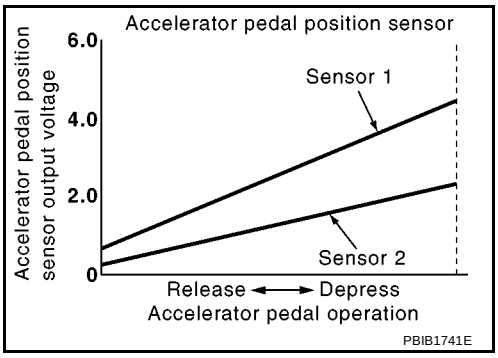

Idle position of the accelerator pedal is determined by the ECM receiving the signal from the accelerator pedal position sensor. The ECM uses this signal for the engine operation such as fuel cut.

CONSULT-II Reference Value in Data Monitor Mode

BBS004IR

Specification data are reference values.

MONITOR ITEM	CONDITION		SPECIFICATION
ACCEL SEN 1	● Ignition switch: ON (Engine stopped)	Accelerator pedal: Fully released	0.6 - 0.9V
		Accelerator pedal: Fully depressed	4.0 - 4.8V
ACCEL SEN 2*	● Ignition switch: ON (Engine stopped)	Accelerator pedal: Fully released	0.6 - 0.9V
		Accelerator pedal: Fully depressed	3.9 - 4.8V
CLSD THL POS	● Ignition switch: ON (Engine stopped)	Accelerator pedal: Fully released	ON
		Accelerator pedal: Slightly depressed	OFF

*: Accelerator pedal position sensor 2 signal is converted by ECM internally. Thus, it differs from ECM terminal voltage.

On Board Diagnosis Logic

BBS004IS

This self-diagnosis has the one trip detection logic.

NOTE:
If DTC P2138 is displayed with DTC P1229, first perform the trouble diagnosis for DTC P1229. Refer to **EC-1150, "DTC P1229 SENSOR POWER SUPPLY"** **.**

DTC No.	Trouble diagnosis name	DTC detecting condition	Possible cause
P2138 2138	Accelerator pedal position sensor circuit range/performance	Rationally incorrect voltage is sent to ECM compared with the signals from APP sensor 1 and APP sensor 2.	● Harness or connector (APP sensor 1 and 2 circuit is open or shorted.) [Crankshaft position sensor (POS) circuit is shorted.] (Refrigerant pressure sensor circuit is shorted.) ● Accelerator pedal position sensor (APP sensor 1 and 2) ● Crankshaft position sensor (POS) ● Refrigerant pressure sensor

FAIL-SAFE MODE

When the malfunction is detected, ECM enters fail-safe mode and the MI lights up.

Engine operating condition in fail-safe mode
The ECM controls the electric throttle control actuator in regulating the throttle opening in order for the idle position to be within +10 degrees. The ECM regulates the opening speed of the throttle valve to be slower than the normal condition. So, the acceleration will be poor.

DTC Confirmation Procedure

BBS004IT

NOTE:
If DTC Confirmation Procedure has been previously conducted, always turn ignition switch OFF and wait at least 10 seconds before conducting the next test.
TESTING CONDITION:
Before performing the following procedure, confirm that battery voltage is more than 10V at idle.

WITH CONSULT-II

1. Turn ignition switch ON.
2. Select “DATA MONITOR” mode with CONSULT-II.
3. Start engine and let it idle for 1 second.
4. If DTC is detected, go to EC-1203, "Diagnostic Procedure" .

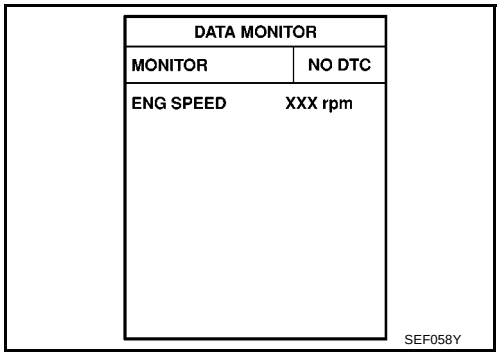

WITH GST

Follow the procedure “WITH CONSULT-II” above.

Wiring Diagram
LHD MODELS

BBS004IU

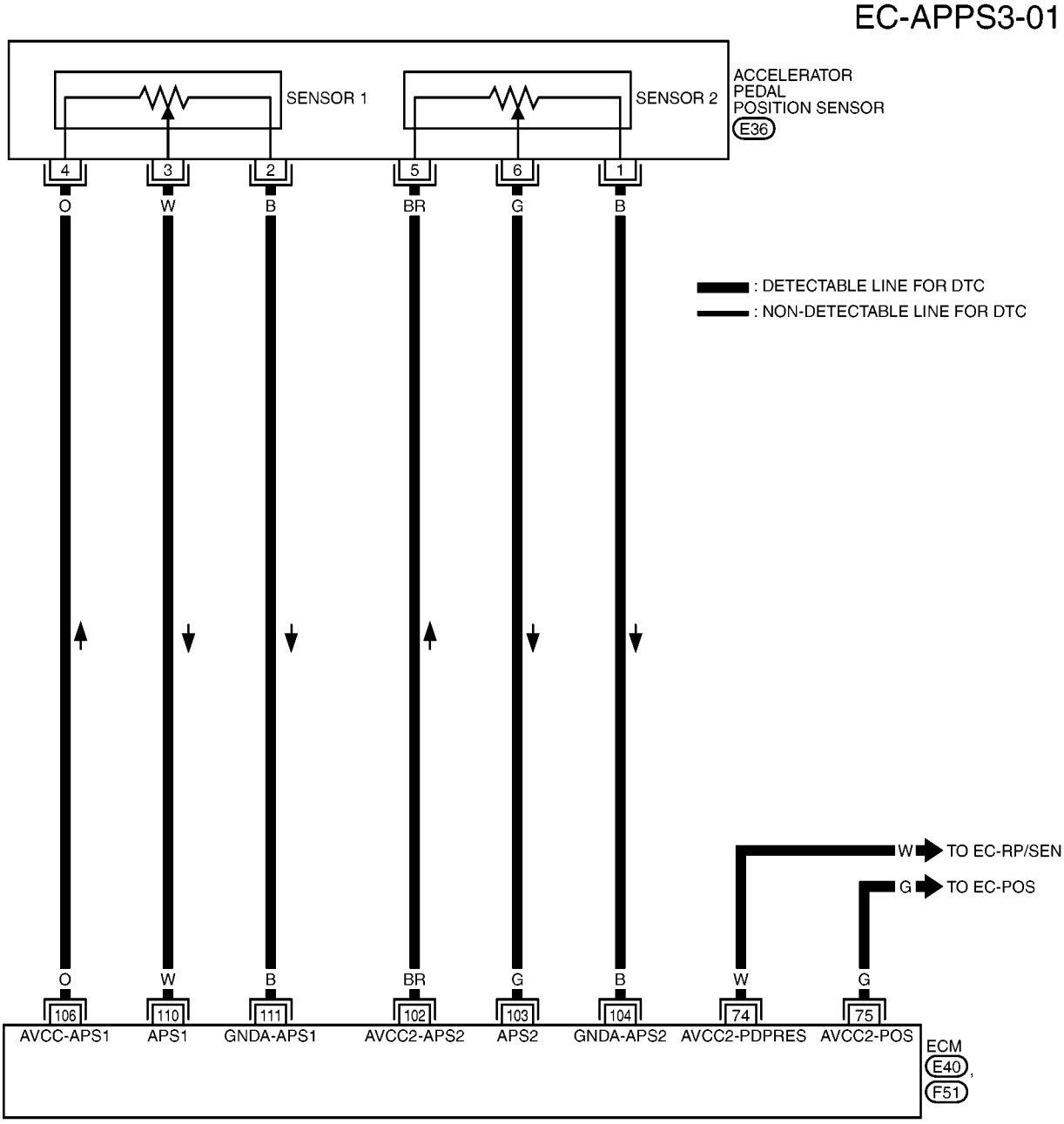

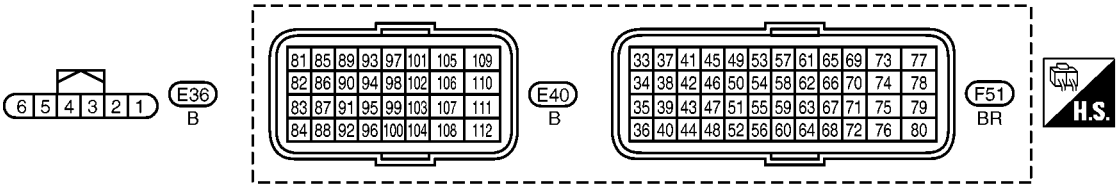

MBWA1487E

Specification data are reference values and are measured between each terminal and ground.

CAUTION:

Do not use ECM ground terminals when measuring input/output voltage. Doing so may result in damage to the ECM's transistor. Use a ground other than ECM terminals, such as the ground.

TERMINAL NO.	WIRE COLOR	ITEM	CONDITION	DATA (DC Voltage)
74	W	Sensor power supply (Refrigerant pressure sensor)	**[Ignition switch: ON]**	Approximately 5V
75	G	Sensor power supply [Crankshaft position sensor (POS)]	**[Ignition switch: ON]**	Approximately 5V
102	BR	Sensor power supply (APP sensor 2)	**[Ignition switch: ON]**	Approximately 5V
103	G	Accelerator pedal position sensor 2	**[Ignition switch: ON]** ● Engine stopped ● Accelerator pedal: Fully released	0.3 - 0.6V
			[Ignition switch: ON] ● Engine stopped ● Accelerator pedal: Fully depressed	1.95 - 2.4V
104	B	Sensor ground (APP sensor 2)	**[Engine is running]** ● **Warm-up condition** ● Idle speed	Approximately 0V
106	O	Sensor power supply (APP sensor 1)	**[Ignition switch: ON]**	Approximately 5V
110	W	Accelerator pedal position sensor 1	**[Ignition switch: ON]** ● Engine stopped ● Accelerator pedal: Fully released	0.6 - 0.9V
			[Ignition switch: ON] ● Engine stopped ● Accelerator pedal: Fully depressed	3.9 - 4.7V
111	B	Sensor ground (APP sensor 1)	**[Engine is running]** ● **Warm-up condition** ● Idle speed	Approximately 0V

RHD MODELS

EC-APPS3-02

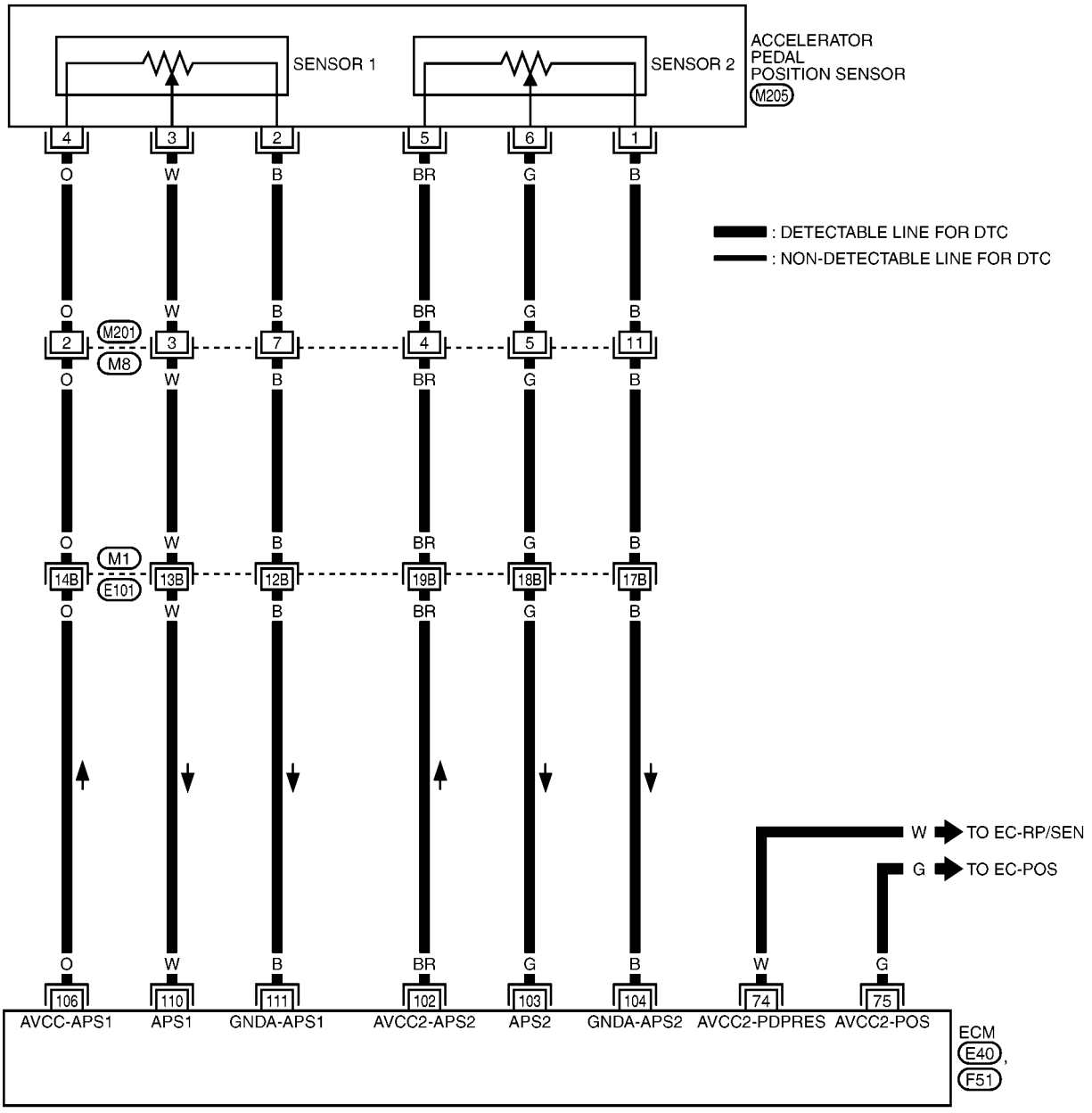

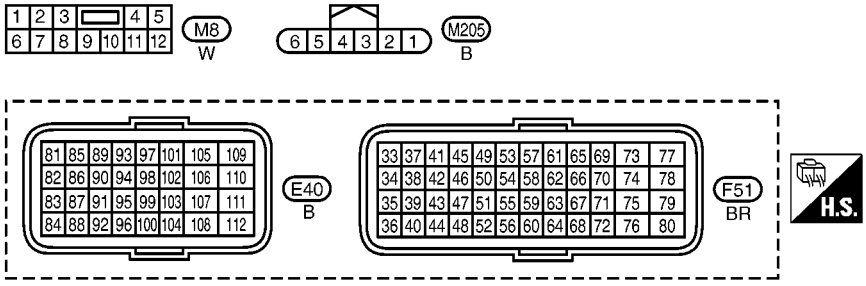

REFER TO THE FOLLOWING.
M1 - SUPER MULTIPLE JUNCTION (SMJ)

MBWA1488E

Specification data are reference values and are measured between each terminal and ground.

CAUTION:

Do not use ECM ground terminals when measuring input/output voltage. Doing so may result in damage to the ECM's transistor. Use a ground other than ECM terminals, such as the ground.

TERMINAL NO.	WIRE COLOR	ITEM	CONDITION	DATA (DC Voltage)
74	W	Sensor power supply (Refrigerant pressure sensor)	**[Ignition switch: ON]**	Approximately 5V
75	G	Sensor power supply [Crankshaft position sensor (POS)]	**[Ignition switch: ON]**	Approximately 5V
102	BR	Sensor power supply (APP sensor 2)	**[Ignition switch: ON]**	Approximately 5V
103	G	Accelerator pedal position sensor 2	**[Ignition switch: ON]** ● Engine stopped ● Accelerator pedal: Fully released	0.3 - 0.6V
			[Ignition switch: ON] ● Engine stopped ● Accelerator pedal: Fully depressed	1.95 - 2.4V
104	B	Sensor ground (APP sensor 2)	**[Engine is running]** ● **Warm-up condition** ● Idle speed	Approximately 0V
106	O	Sensor power supply (APP sensor 1)	**[Ignition switch: ON]**	Approximately 5V
110	W	Accelerator pedal position sensor 1	**[Ignition switch: ON]** ● Engine stopped ● Accelerator pedal: Fully released	0.6 - 0.9V
			[Ignition switch: ON] ● Engine stopped ● Accelerator pedal: Fully depressed	3.9 - 4.7V
111	B	Sensor ground (APP sensor 1)	**[Engine is running]** ● **Warm-up condition** ● Idle speed	Approximately 0V

Diagnostic Procedure

BBS004IV

1. CHECK GROUND CONNECTIONS

1. Turn ignition switch OFF.
2. Loosen and retighten ground screws on the body.
   Refer to EC-924, "Ground Inspection" .

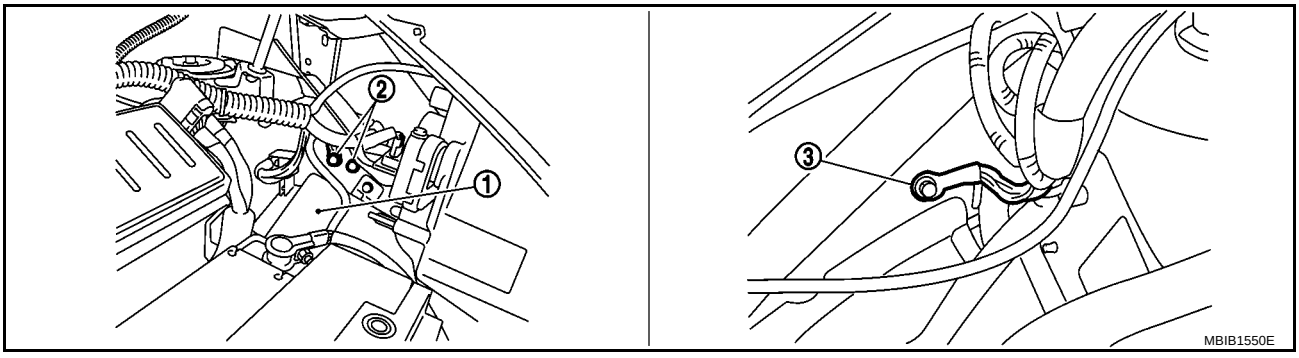

1. IPDM E/R
2. Body ground
3. Body ground

OK or NG

OK >> GO TO 2.
NG >> Repair or replace ground connections.

2. CHECK APP SENSOR 1 POWER SUPPLY CIRCUIT

1. Disconnect accelerator pedal position (APP) sensor harness connector (1).
   - Accelerator pedal position sensor (2)
   - Accelerator pedal (3)
2. Turn ignition switch ON.

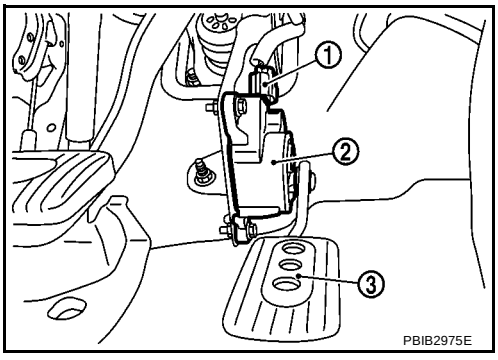

3. Check voltage between APP sensor terminal 4 and ground with CONSULT-II or tester.

   Voltage: Approximately 5V

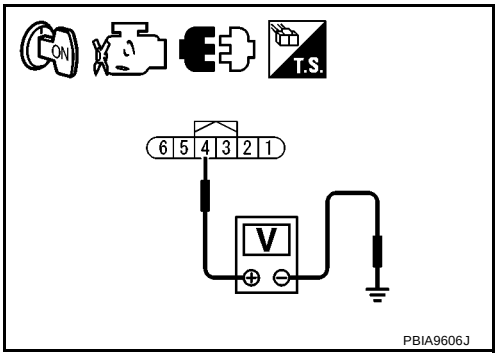

OK or NG

OK >> GO TO 4.
NG >> GO TO 3.

3. DETECT MALFUNCTIONING PART

Check the following.

- Harness connectors M201, M8 (RHD models)
- Harness connectors M1, E101 (RHD models)
- Harness for open or short between APP sensor and ECM

>> Repair open circuit or short to ground or short to power in harness or connectors.

4. CHECK APP SENSOR 2 POWER SUPPLY CIRCUIT-I

1. Turn ignition switch ON.
2. Check voltage between APP sensor terminal 5 and ground with CONSULT-II or tester.

Voltage: Approximately 5V

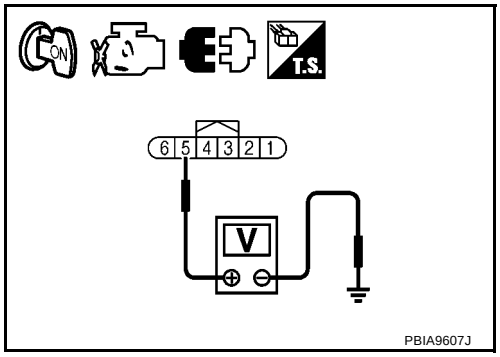

OK or NG

OK >> GO TO 9.
NG >> GO TO 5.

5. CHECK APP SENSOR 2 POWER SUPPLY CIRCUIT-II

1. Turn ignition switch OFF.
2. Disconnect ECM harness connector.
3. Check harness continuity between APP sensor terminal 5 and ECM terminal 102. Refer to Wiring Diagram.

Continuity should exist.

OK or NG

OK >> GO TO 7.
NG >> GO TO 6.

6. DETECT MALFUNCTIONING PART

Check the following.

- Harness connectors M201, M8 (RHD models)
- Harness connectors M1, E101 (RHD models)
- Harness for open between APP sensor and ECM

>> Repair open circuit in harness or connectors.

7. CHECK APP SENSOR 2 POWER SUPPLY CIRCUIT-III

Check harness for short to power and short to ground, between the following terminals.

ECM terminal	Sensor terminal	Reference Wiring Diagram
74	Refrigerant pressure sensor terminal 3	EC-1232, "Wiring Diagram"
75	Crankshaft position sensor (POS) terminal 1	EC-1044, "Wiring Diagram"
102	APP sensor terminal 5	EC-1199, "Wiring Diagram"

OK or NG

OK >> GO TO 8.
NG >> Repair short to ground or short to power in harness or connectors.

8. CHECK COMPONENTS

Check the following.

- Crankshaft position sensor (POS) (Refer to EC-1048, "Component Inspection" .)
- Refrigerant pressure sensor (Refer to ATC-85, "Refrigerant Pressure Sensor" .)

OK or NG

OK >> GO TO 15.
NG >> Replace malfunctioning component.

9. CHECK APP SENSOR GROUND CIRCUIT FOR OPEN AND SHORT

1. Turn ignition switch OFF.
2. Disconnect ECM harness connector.
3. Check harness continuity between ECM terminal 111 and APP sensor terminal 2, ECM terminal 104 and APP sensor terminal 1.
   Refer to Wiring Diagram.

   Continuity should exist.

4. Also check harness for short to ground and short to power.

OK or NG

OK >> GO TO 11.
NG >> GO TO 10.

10. DETECT MALFUNCTIONING PART

Check the following.

- Harness connectors M201, M8 (RHD models)
- Harness connectors M1, E101 (RHD models)
- Harness for open between APP sensor and ECM

>> Repair open circuit in harness or connectors.

11. CHECK APP SENSOR INPUT SIGNAL CIRCUIT FOR OPEN AND SHORT

1. Check harness continuity between ECM terminal 110 and APP sensor terminal 3, ECM terminal 103 and APP sensor terminal 6.
   Refer to Wiring Diagram.

   Continuity should exist.

2. Also check harness for short to ground and short to power.

OK or NG

OK >> GO TO 13.
NG >> GO TO 12.

12. DETECT MALFUNCTIONING PART

Check the following.

- Harness connectors M201, M8 (RHD models)
- Harness connectors M1, E101 (RHD models)
- Harness for open between APP sensor and ECM

>> Repair open circuit in harness or connectors.

13. CHECK APP SENSOR

Refer to EC-1206, "Component Inspection" .

OK or NG

OK >> GO TO 15.
NG >> GO TO 14.

14. REPLACE ACCELERATOR PEDAL ASSEMBLY

1. Replace accelerator pedal assembly.
2. Perform EC-857, "Accelerator Pedal Released Position Learning" .
3. Perform EC-857, "Throttle Valve Closed Position Learning" .
4. Perform EC-858, "Idle Air Volume Learning" .

>> **INSPECTION END**

15. CHECK INTERMITTENT INCIDENT

Refer to EC-917, "TROUBLE DIAGNOSIS FOR INTERMITTENT INCIDENT" .

>> **INSPECTION END**

Component Inspection

BBS004IW

ACCELERATOR PEDAL POSITION SENSOR

1. Reconnect all harness connectors disconnected.
2. Turn ignition switch ON.
3. Check voltage between ECM terminals 110 (APP sensor 1 signal), 103 (APP sensor 2 signal) and ground under the following conditions.

Terminal	Accelerator pedal	Voltage
110 (Accelerator pedal position sensor 1)	Fully released	0.6 - 0.9V
	Fully depressed	3.9 - 4.7V
103 (Accelerator pedal position sensor 2)	Fully released	0.3 - 0.6V
	Fully depressed	1.95 - 2.4V

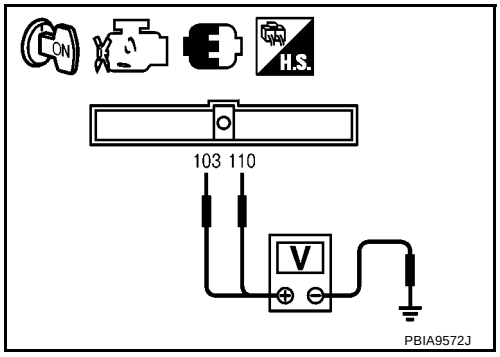

4. If NG, replace accelerator pedal assembly and go to next step.
5. Perform EC-857, "Accelerator Pedal Released Position Learning" .
6. Perform EC-857, "Throttle Valve Closed Position Learning" .
7. Perform EC-858, "Idle Air Volume Learning" .

Removal and Installation

BBS004IX

ACCELERATOR PEDAL

Refer to ACC-2, "ACCELERATOR CONTROL SYSTEM" .

ELECTRICAL LOAD SIGNAL

PFP:25350

CONSULT-II Reference Value in Data Monitor Mode

BBS004J1

Specification data are reference values.

MONITOR ITEM	CONDITION		SPECIFICATION
LOAD SIGNAL	● Ignition switch: ON	Rear window defogger switch is ON and/or lighting switch is in 2nd position.	ON
		Rear window defogger switch is OFF and lighting switch is OFF.	OFF
HEATER FAN SW	● Ignition switch: ON	Heater fan is operating.	ON
		Heater fan is not operating.	OFF

Diagnostic Procedure

BBS004J2

1. CHECK LOAD SIGNAL CIRCUIT OVERALL FUNCITION-I

1. Turn ignition switch ON.
2. Check “LOAD SIGNAL” in “DATA MONITOR” mode with CONSULT-II under the following conditions.

Condition	LOAD SIGNAL
Lighting switch: ON at 2nd position	ON
Lighting switch: OFF	OFF

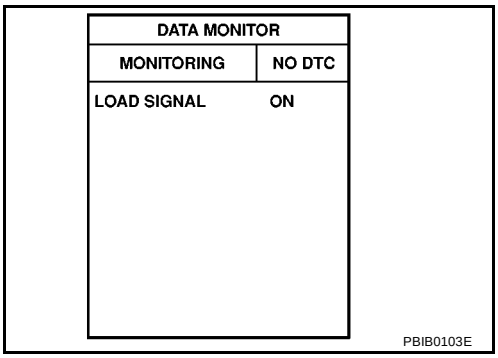

OK or NG

OK >> GO TO 2.
NG >> GO TO 4.

2. CHECK LOAD SIGNAL CIRCUIT OVERALL FUNCTION-II

Check “LOAD SIGNAL” in “DATA MONITOR” mode with CONSULT-II under the following conditions.

Condition	LOAD SIGNAL
Rear window defogger switch: ON	ON
Rear window defogger switch: OFF	OFF

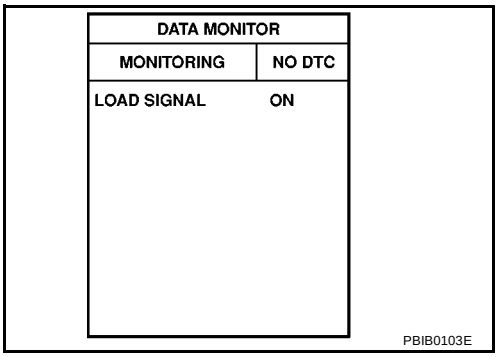

OK or NG

OK >> GO TO 3.
NG >> GO TO 5.

3. CHECK HEATER FAN SIGNAL CIRCUIT OVERALL FUNCTION

Check “HEATER FAN SW” in “DATA MONITOR” mode with CONSULT-II under the following conditions.

Condition	HEATER FAN SW
Heater fan control switch: ON	ON
Heater fan control switch: OFF	OFF

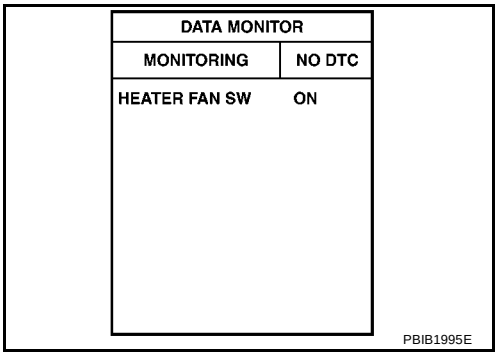

OK or NG

OK >> **INSPECTION END**.
NG >> GO TO 6.

4. CHECK HEADLAMP SYSTEM

Refer to LT-7, "HEADLAMP -CONVENTIONAL TYPE-" or LT-35, "HEADLAMP - DAYTIME LIGHT SYSTEM -" .

>> **INSPECTION END**

5. CHECK REAR WINDOW DEFOGGER SYSTEM

Refer to GW-12, "REAR WINDOW DEFOGGER" .

>> **INSPECTION END**

6. CHECK HEATER FAN CONTROL SYSTEM

Refer to ATC-26, "TROUBLE DIAGNOSIS" (models with automatic air conditioner), MTC-23, "TROUBLE DIAGNOSIS" (models with manual air conditioner).

>> **INSPECTION END**

FUEL INJECTOR

PFP:16600

Component Description

BBS004J3

The fuel injector is a small, precise solenoid valve. When the ECM supplies a ground to the fuel injector circuit, the coil in the fuel injector is energized. The energized coil pulls the ball valve back and allows fuel to flow through the fuel injector into the intake manifold. The amount of fuel injected depends upon the injection pulse duration. Pulse duration is the length of time the fuel injector remains open. The ECM controls the injection pulse duration based on engine fuel needs.

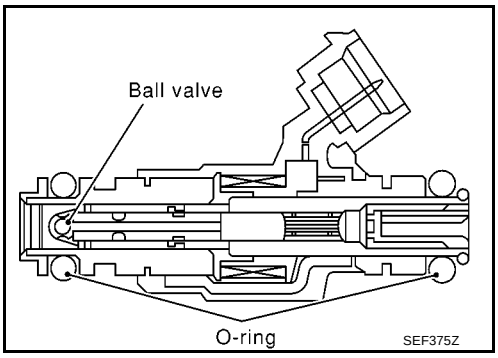

CONSULT-II Reference Value in Data Monitor Mode

BBS004J4

Specification data are reference values.

MONITOR ITEM	CONDITION		SPECIFICATION
B/FUEL SCHDL	See EC-907, "TROUBLE DIAGNOSIS - SPECIFICATION VALUE" .		
INJ PULSE-B1	● Engine: After warming up ● Air conditioner switch: OFF ● Shift lever: P or N (A/T), Neutral (M/T) ● No load	Idle	2.0 - 3.0 msec
		2,000 rpm	1.9 - 2.9 msec

Wiring Diagram

BBS004J5

EC-INJECT-01

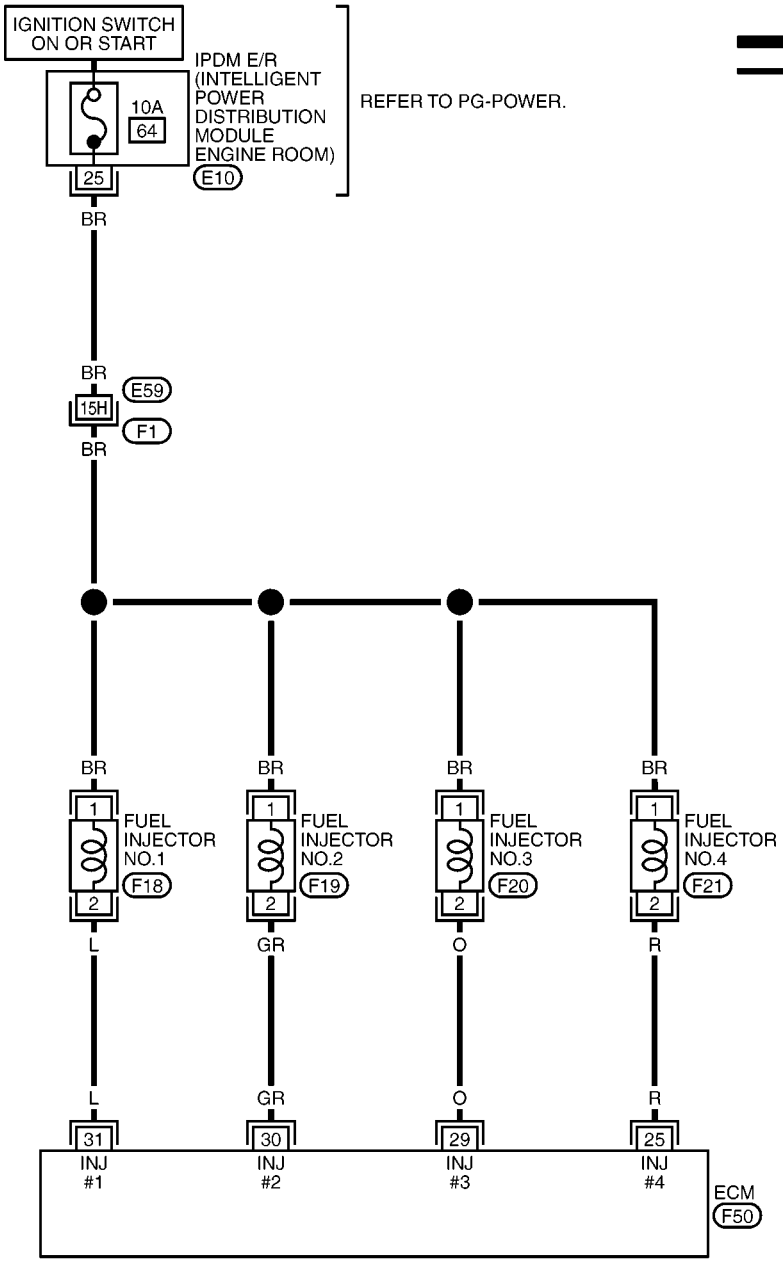

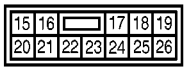

E10
BR

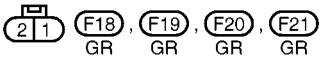

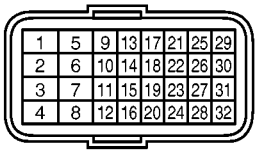

F50
BR

REFER TO THE FOLLOWING.
F1 - SUPER MULTIPLE JUNCTION (SMJ)

MBWA1489E

Specification data are reference values and are measured between each terminal and ground.
Pulse signal is measured by CONSULT-II.

CAUTION:
Do not use ECM ground terminals when measuring input/output voltage. Doing so may result in damage to the ECM's transistor. Use a ground other than ECM terminals, such as the ground.

TERMINAL NO.	WIRE COLOR	ITEM	CONDITION	DATA (DC Voltage)
25 29 30 31	R O GR L	Fuel injector No. 4 Fuel injector No. 3 Fuel injector No. 2 Fuel injector No. 1	**[Engine is running]** ● **Warm-up condition** ● Idle speed **NOTE:** The pulse cycle changes depending on rpm at idle	BATTERY VOLTAGE (11 - 14V)★ 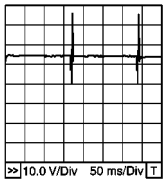 PBIB0529E
			[Engine is running] ● **Warm-up condition** ● Engine speed: 2,000 rpm	BATTERY VOLTAGE (11 - 14V)★ 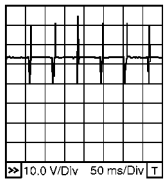 PBIA4943J

★: Average voltage for pulse signal (Actual pulse signal can be confirmed by oscilloscope.)

Diagnostic Procedure

BBS004J6

1. INSPECTION START

Turn ignition switch to START.
Is any cylinder ignited?

Yes or No

Yes >> GO TO 2.
No >> GO TO 3.

2. CHECK OVERALL FUNCTION

With CONSULT-II

1. Start engine.
2. Perform “POWER BALANCE” in “ACTIVE TEST” mode with CONSULT-II.
3. Make sure that each circuit produces a momentary engine speed drop.

ACTIVE TEST	
POWER BALANCE	
MONITOR	
ENG SPEED	XXX rpm
MAS A/F SE-B1	XXX V

PBIB0133E

Without CONSULT-II

1. Start engine.
2. Listen to each fuel injector operating sound.

   Clicking noise should be heard.

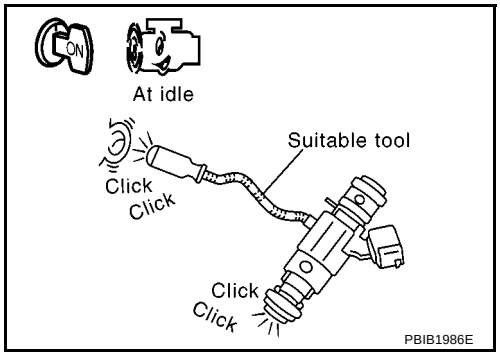

OK or NG

OK >> **INSPECTION END**
NG >> GO TO 3.

3. CHECK FUEL INJECTOR POWER SUPPLY CIRCUIT

1. Turn ignition switch OFF.
2. Disconnect fuel injector (2) harness connector.
- Ignition coil (1)
3. Turn ignition switch ON.

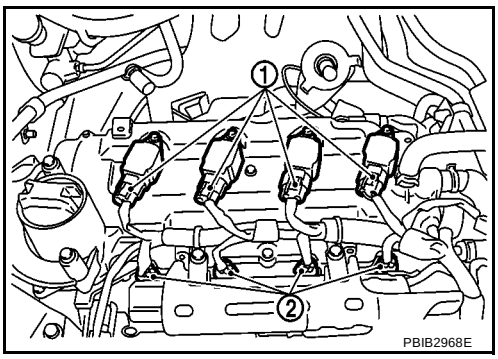

4. Check voltage between fuel injector terminal 1 and ground with CONSULT-II or tester.

Voltage: Battery voltage

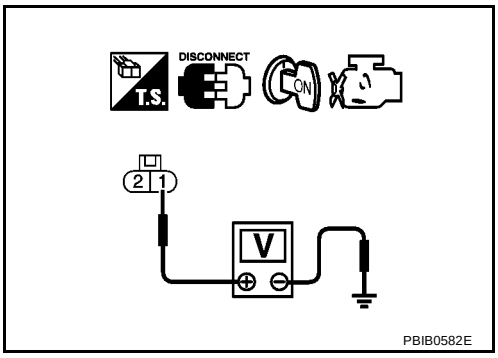

OK or NG

OK >> GO TO 5.
NG >> GO TO 4.

4. DETECT MALFUNCTIONING PART

Check the following.

- Harness connectors E59, F1
- IPDM E/R harness connector E10
- 10A fuse
- Harness for open or short between fuel injector and fuse

>> Repair open circuit or short to ground or short to power in harness or connectors.

5. CHECK FUEL INJECTOR OUTPUT SIGNAL CIRCUIT FOR OPEN AND SHORT

1. Turn ignition switch OFF.
2. Disconnect ECM harness connector.
3. Check harness continuity between fuel injector terminal 2 and ECM terminals 25, 29, 30, 31. Refer to Wiring Diagram.

Continuity should exist.

4. Also check harness for short to ground and short to power.

OK or NG

OK >> GO TO 6.
NG >> Repair open circuit or short to ground or short to power in harness or connectors.

6. CHECK FUEL INJECTOR

Refer to EC-1214, "Component Inspection" .

OK or NG

OK >> GO TO 7.
NG >> Replace fuel injector.

7. CHECK INTERMITTENT INCIDENT

Refer to EC-917, "TROUBLE DIAGNOSIS FOR INTERMITTENT INCIDENT" .

>> **INSPECTION END**

Component Inspection

BBS004J7

FUEL INJECTOR

1. Disconnect fuel injector harness connector.
2. Check resistance between terminals as shown in the figure.

Resistance: 11.1 - 14.5Ω [at 10 - 60°C (50 - 140°F)]

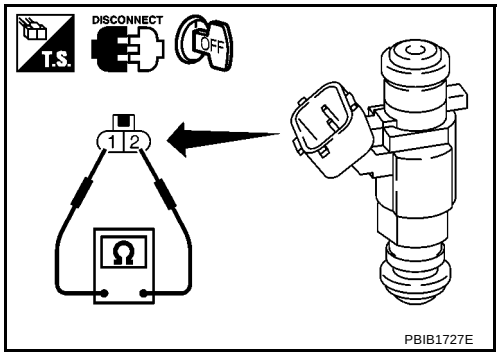

Removal and Installation

BBS004J8

FUEL INJECTOR

Refer to EM-135, "FUEL INJECTOR AND FUEL TUBE" .

FUEL PUMP

PFP:17042

Description

BBS004J9

SYSTEM DESCRIPTION

Sensor	Input Signal to ECM	ECM Function	Actuator
Crankshaft position sensor (POS) Camshaft position sensor (PHASE)	Engine speed*	Fuel pump control	Fuel pump relay
Battery	Battery voltage*		

*: ECM determines the start signal status by the signals of engine speed and battery voltage.

The ECM activates the fuel pump for several seconds after the ignition switch is turned ON to improve engine startability. If the ECM receives a engine speed signal from the crankshaft position sensor (POS) and camshaft position sensor (PHASE), it knows that the engine is rotating, and causes the pump to operate. If the engine speed signal is not received when the ignition switch is ON, the engine stalls. The ECM stops pump operation and prevents battery discharging, thereby improving safety. The ECM does not directly drive the fuel pump. It controls the ON/OFF fuel pump relay, which in turn controls the fuel pump.

Condition	Fuel pump operation
Ignition switch is turned to ON	Operates for 1 second
Engine running and cranking	Operates
When engine is stopped	Stops in 1.5 seconds
Except as shown above	Stops

COMPONENT DESCRIPTION

A turbine type design fuel pump is used in the fuel tank.

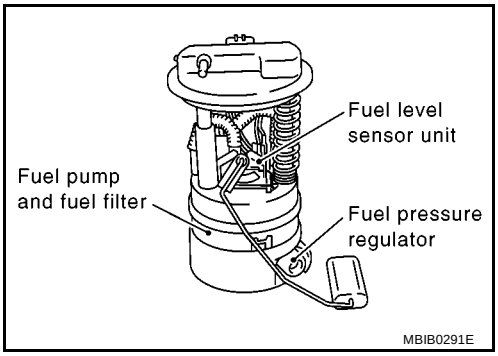

CONSULT-II Reference Value in Data Monitor Mode

BBS004JA

Specification data are reference values.

MONITOR ITEM	CONDITION	SPECIFICATION
FUEL PUMP RLY	● For 1 second after turning ignition switch ON ● Engine running or cranking	ON
	● Except above conditions	OFF

Wiring Diagram

BBS004JB

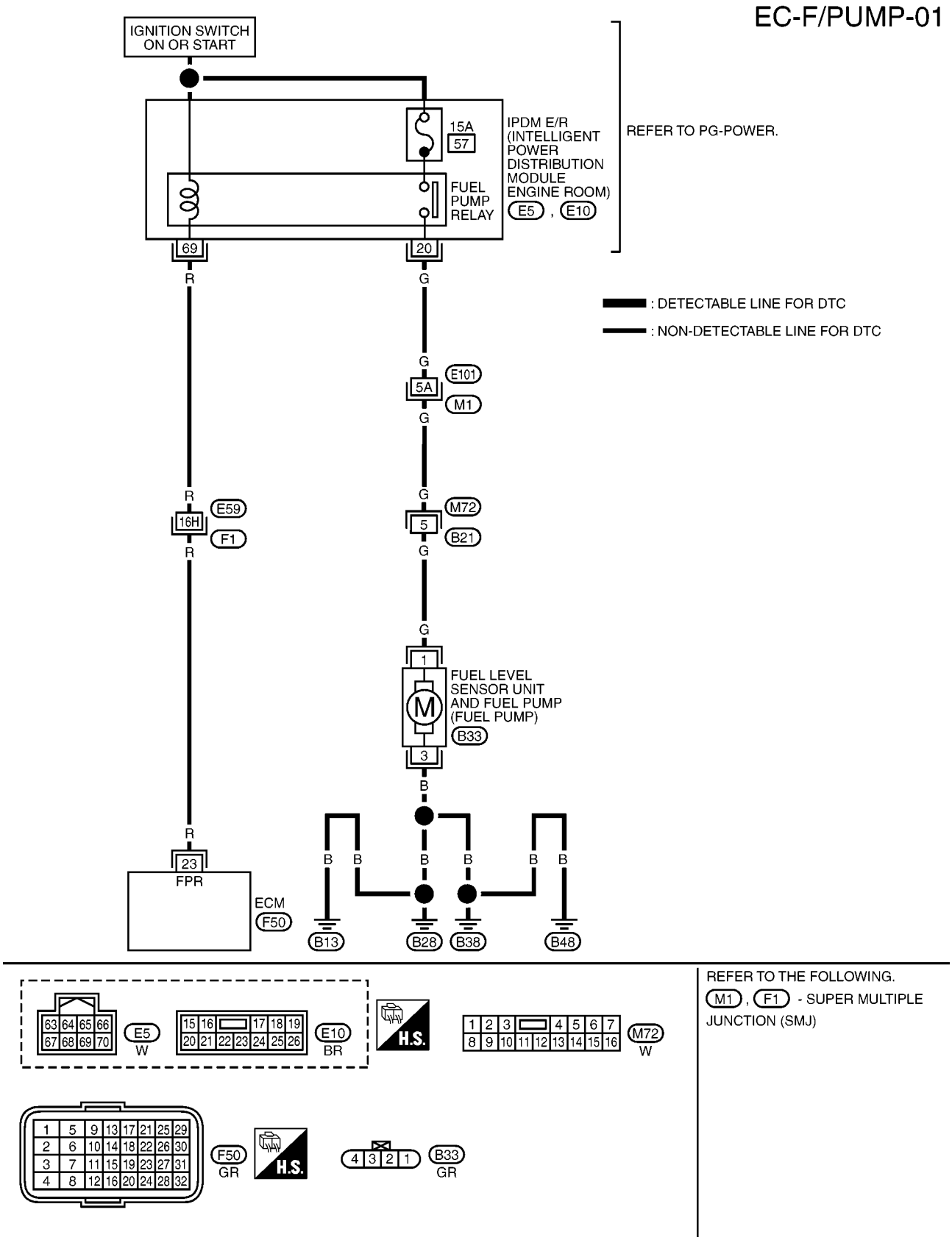

Specification data are reference values and are measured between each terminal and ground.

CAUTION:
Do not use ECM ground terminals when measuring input/output voltage. Doing so may result in damage to the ECM's transistor. Use a ground other than ECM terminals, such as the ground.

TERMINAL NO.	WIRE COLOR	ITEM	CONDITION	DATA (DC Voltage)
23	R	Fuel pump relay	**[Ignition switch: ON]** ● For 1 second after turning ignition switch ON **[Engine is running]**	0 - 1.0V
			[Ignition switch: ON] ● More than 1 second after turning ignition switch ON	BATTERY VOLTAGE (11 - 14V)

Diagnostic Procedure

BBS004JC

1. CHECK OVERALL FUNCTION

1. Turn ignition switch ON.
2. Pinch fuel feed hose (1) with two fingers.

– Illustration shows the view with intake air duct removed.

Fuel pressure pulsation should be felt on the fuel feed hose for 1 second after ignition switch is turned ON.

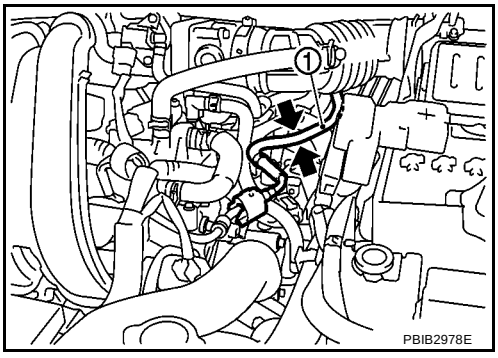

OK or NG

OK >> **INSPECTION END**
NG >> GO TO 2.

2. CHECK FUEL PUMP POWER SUPPLY CIRCUIT-I

1. Turn ignition switch OFF.
2. Disconnect ECM harness connector.
3. Turn ignition switch ON.
4. Check voltage between ECM terminal 23 and ground with CONSULT-II or tester.

Voltage: Battery voltage

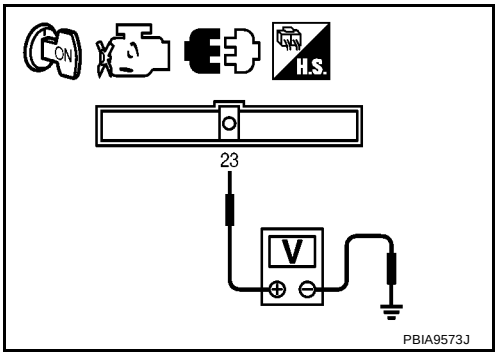

OK or NG

OK >> GO TO 5.
NG >> GO TO 3.

3. CHECK FUEL PUMP POWER SUPPLY CIRCUIT-II

1. Turn ignition switch OFF.
2. Disconnect IPDM E/R harness connector E5.
3. Check harness continuity between ECM terminal 23 and IPDM E/R terminal 69.
   Refer to Wiring Diagram.

   Continuity should exist.

4. Also check harness for short to ground and short to power.

OK or NG

OK >> GO TO 11.
NG >> GO TO 4.

4. DETECT MALFUNCTIONING PART

Check the following.

- Harness or connectors E59, F1
- Harness for open or short between IPDM E/R and ECM

>> Repair harness or connectors.

5. CHECK FUEL PUMP POWER SUPPLY CIRCUIT-III

1. Turn ignition switch OFF.
2. Reconnect all harness connectors disconnected.
3. Disconnect “fuel level sensor unit and fuel pump” harness connector.
4. Turn ignition switch ON.

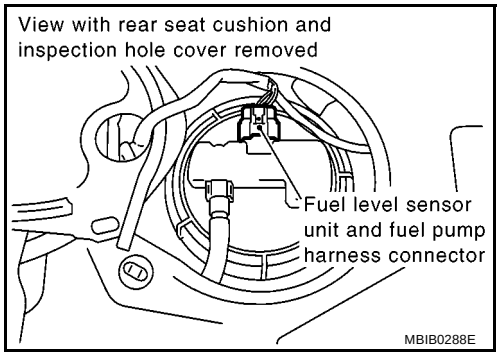

5. Check voltage between “fuel level sensor unit and fuel pump” terminal 1 and ground with CONSULT-II or tester.

   Voltage: Battery voltage should exist for 1 second after ignition switch is turned ON.

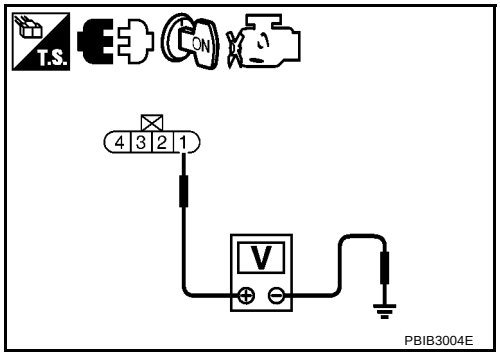

OK or NG

OK >> GO TO 9.
NG >> GO TO 6.

6. CHECK 15A FUSE

1. Turn ignition switch OFF.
2. Disconnect 15A fuse.
3. Check 15A fuse.

OK or NG

OK >> GO TO 7.
NG >> Replace fuse.

7. CHECK FUEL PUMP POWER SUPPLY CIRCUIT-IV

1. Disconnect IPDM E/R harness connector E10.
2. Check harness continuity between IPDM E/R terminal 20 and “fuel level sensor unit and fuel pump” terminal 1.
   Refer to Wiring Diagram.

   Continuity should exist.

3. Also check harness for short to ground and short to power.

OK or NG

OK >> GO TO 11.
NG >> GO TO 8.

8. DETECT MALFUNCTIONING PART

Check the following.

- Harness or connectors M1, E101
- Harness or connectors M72, B21
- Harness for open or short between IPDM E/R and “fuel level sensor unit and fuel pump”

>> Repair harness or connectors.

9. CHECK FUEL PUMP GROUND CIRCUIT

1. Check harness continuity between “fuel level sensor unit and fuel pump” terminal 3 and ground.
   Refer to Wiring Diagram.

   Continuity should exist.

2. Also check harness for short to power.

OK or NG

OK >> GO TO 10.
NG >> Repair or replace harness or connectors.

10. CHECK FUEL PUMP

Refer to EC-1220, "Component Inspection" .

OK or NG

OK >> GO TO 11.
NG >> Replace “fuel level sensor unit and fuel pump”.

11. CHECK INTERMITTENT INCIDENT

Refer to EC-917, "TROUBLE DIAGNOSIS FOR INTERMITTENT INCIDENT" .

OK or NG

OK >> Replace IPDM E/R. Refer to PG-18, "IPDM E/R (INTELLIGENT POWER DISTRIBUTION MODULE ENGINE ROOM)"
NG >> Repair or replace harness or connectors.

Component Inspection

BBS004JD

FUEL PUMP

1. Disconnect “fuel level sensor unit and fuel pump” harness connector.
2. Check resistance between “fuel level sensor unit and fuel pump” terminals 1 and 3.

Resistance: Approximately 0.2 - 5.0Ω [at 25°C (77°F)]

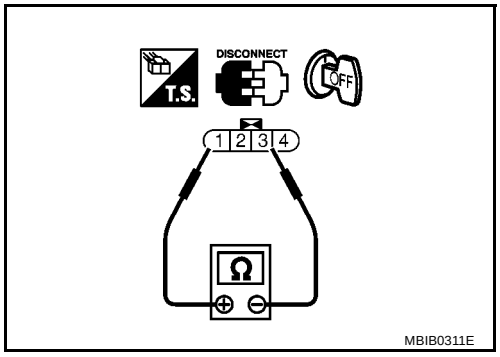

Removal and Installation

BBS004JE

FUEL PUMP

Refer to FL-15, "FUEL LEVEL SENSOR UNIT, FUEL FILTER AND FUEL PUMP ASSEMBLY" .

IGNITION SIGNAL

PFP:22448

Component Description

BBS004JF

IGNITION COIL & POWER TRANSISTOR

The ignition signal from the ECM is sent to and amplified by the power transistor. The power transistor turns ON and OFF the ignition coil (1) primary circuit. This ON/OFF operation induces the proper high voltage in the coil secondary circuit.

- Fuel injector (2)

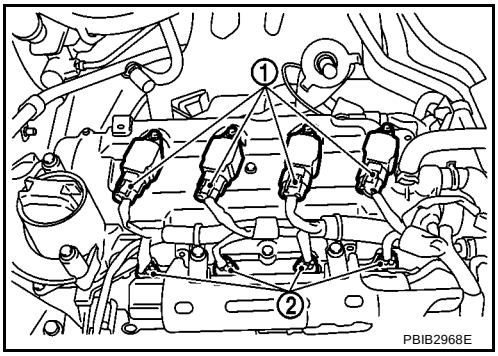

Wiring Diagram

BBS004JG

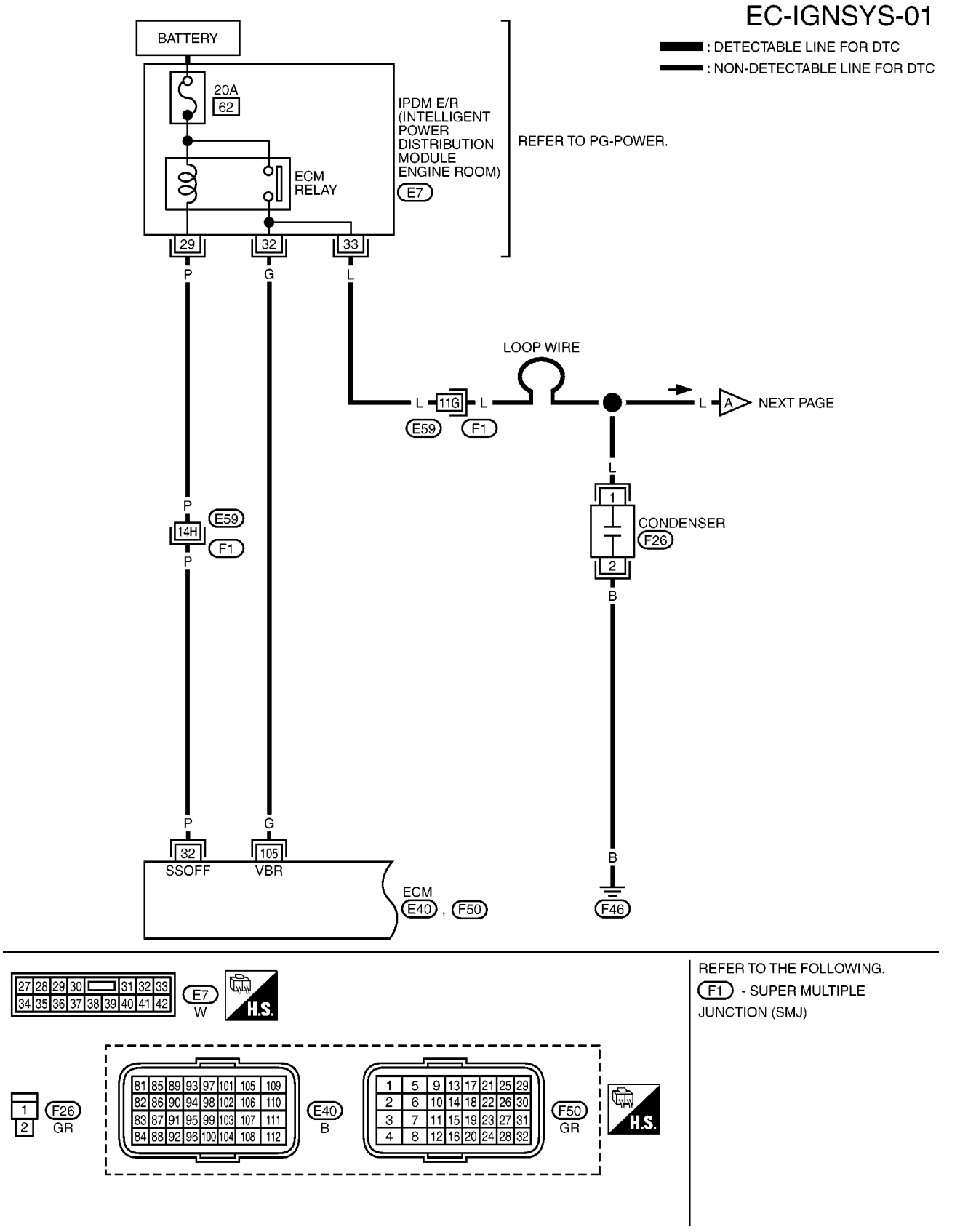

MBWA1491E

Specification data are reference values and are measured between each terminal and ground.

CAUTION:

Do not use ECM ground terminals when measuring input/output voltage. Doing so may result in damage to the ECM's transistor. Use a ground other than ECM terminals, such as the ground.

TERMINAL NO.	WIRE COLOR	ITEM	CONDITION	DATA (DC Voltage)
32	P	ECM relay (Self shut-off)	**[Engine is running]** **[Ignition switch: OFF]** ● For a few seconds after turning ignition switch OFF	0 - 1.0V
			[Ignition switch: OFF] ● More than a few seconds after turning ignition switch OFF	BATTERY VOLTAGE (11 - 14V)
105	G	Power supply for ECM	**[Ignition switch: ON]**	BATTERY VOLTAGE (11 - 14V)

EC-IGNSYS-02

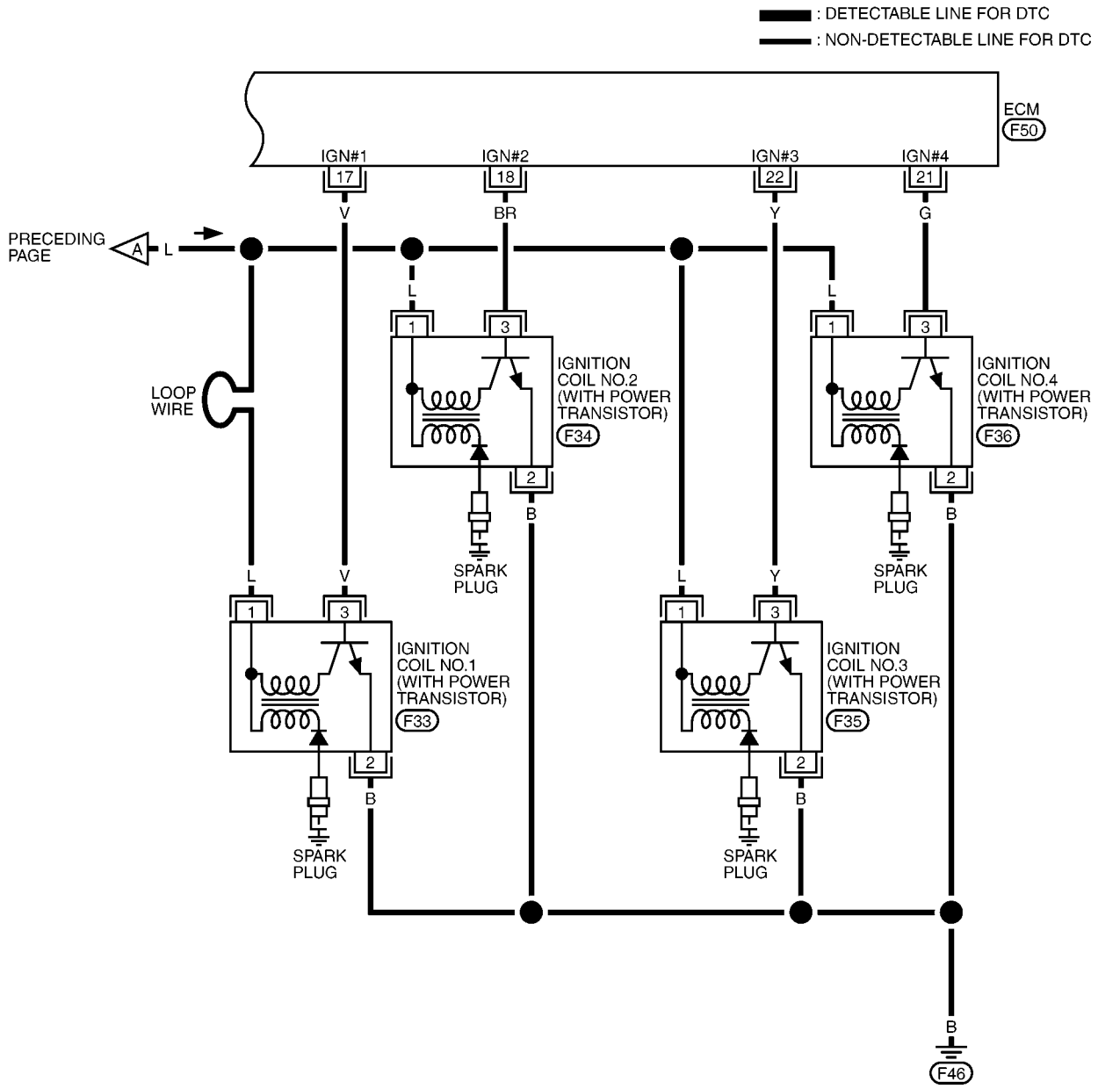

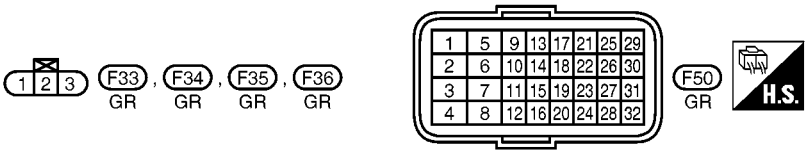

MBWA1492E

Specification data are reference values and are measured between each terminal and ground.
Pulse signal is measured by CONSULT-II.

CAUTION:
Do not use ECM ground terminals when measuring input/output voltage. Doing so may result in damage to the ECM's transistor. Use a ground other than ECM terminals, such as the ground.

TERMINAL NO.	WIRE COLOR	ITEM	CONDITION	DATA (DC Voltage)
17 18 21 22	V BR G Y	Ignition signal No. 1 Ignition signal No. 2 Ignition signal No. 4 Ignition signal No. 3	**[Engine is running]** ● **Warm-up condition** ● Idle speed **NOTE:** The pulse cycle changes depending on rpm at idle	0 - 0.3V★ 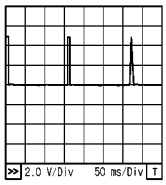 PBIA9265J
			[Engine is running] ● **Warm-up condition** ● Engine speed: 2,000 rpm	0.2 - 0.5V★ 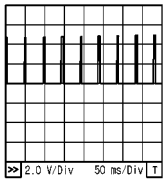 PBIA9266J

★: Average voltage for pulse signal (Actual pulse signal can be confirmed by oscilloscope.)

Diagnostic Procedure

BBS004JH

1. CHECK ENGINE START

Turn ignition switch OFF, and restart engine.
Is engine running?

Yes or No

Yes (With CONSULT-II)>>GO TO 2.
Yes (Without CONSULT-II)>>GO TO 3.
No >> GO TO 4.

2. CHECK OVERALL FUNCTION

With CONSULT-II

1. Perform “POWER BALANCE” in “ACTIVE TEST” mode with CONSULT-II.
2. Make sure that each circuit produces a momentary engine speed drop.

OK or NG

OK >> **INSPECTION END**
NG >> GO TO 10.

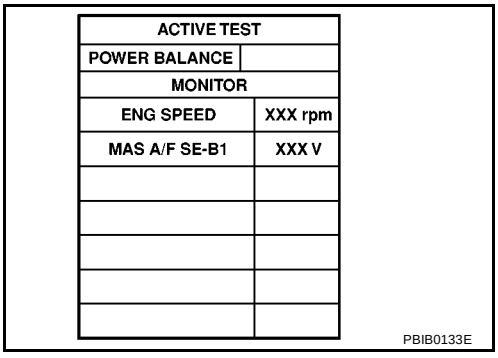

ACTIVE TEST	
POWER BALANCE	
MONITOR	
ENG SPEED	XXX rpm
MAS A/F SE-B1	XXX V

PBIB0133E

3. CHECK OVERALL FUNCTION

Without CONSULT-II

1. Let engine idle.
2. Read the voltage signal between ECM terminals 17, 18, 21, 22 and ground with an oscilloscope.
3. Verify that the oscilloscope screen shows the signal wave as shown below.

   NOTE:
   The pulse cycle changes depending on rpm at idle.

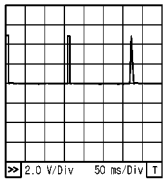

PBIA9265J

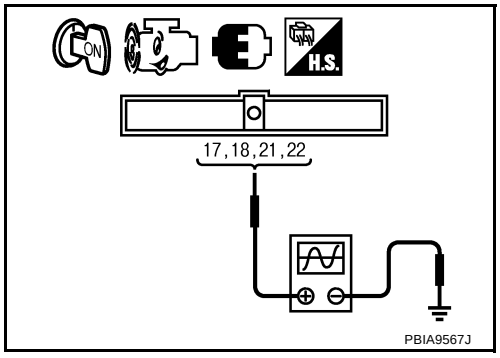

PBIA9567J

OK or NG

OK >> **INSPECTION END**
NG >> GO TO 10.

4. CHECK IGNITION COIL POWER SUPPLY CIRCUIT-I

1. Turn ignition switch OFF, wait at least 10 seconds and then turn ON.
2. Check voltage between ECM terminal 105 and ground with CONSULT-II or tester.

   Voltage: Battery voltage

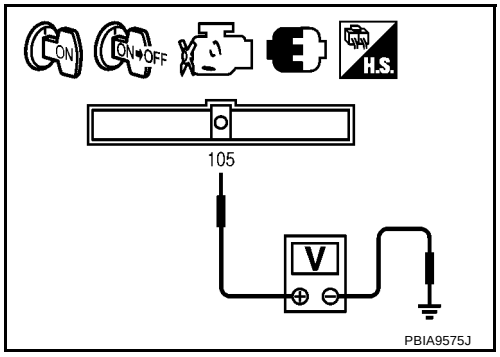

PBIA9575J

OK or NG

OK >> GO TO 5.
NG >> Go to EC-918, "POWER SUPPLY AND GROUND CIRCUIT" .

5. CHECK IGNITION COIL POWER SUPPLY CIRCUIT-II

1. Turn ignition switch OFF.
2. Disconnect condenser (1) harness connector.
- ⇦: Vehicle front
3. Turn ignition switch ON.

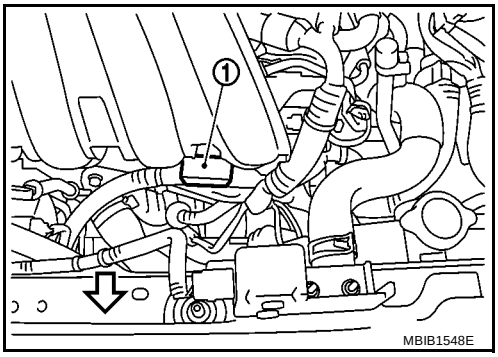

4. Check voltage between condenser terminal 1 and ground with CONSULT-II or tester.

Voltage: Battery voltage

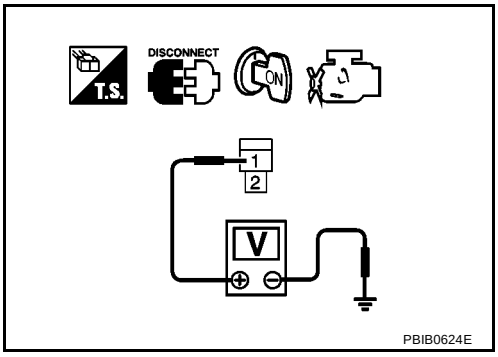

OK or NG

OK >> GO TO 8.
NG >> GO TO 6.

6. CHECK IGNITION COIL POWER SUPPLY CIRCUIT-III

1. Turn ignition switch OFF.
2. Disconnect IPDM E/R harness connector E7.
3. Check harness continuity between IPDM E/R terminal 33 and condenser terminal 1. Refer to Wiring Diagram.

Continuity should exist.

4. Also check harness for short to ground and short to power.

OK or NG

OK >> Go to EC-918, "POWER SUPPLY AND GROUND CIRCUIT" .
NG >> GO TO 7.

7. DETECT MALFUNCTIONING PART

Check the following.

- Harness connectors E59, F1
- Harness for open or short between IPDM E/R and condenser

>> Repair open circuit or short to ground or short to power in harness or connectors.

8. CHECK CONDENSER GROUND CIRCUIT FOR OPEN AND SHORT

1. Turn ignition switch OFF.
2. Check harness continuity between condenser terminal 2 and ground.
   Refer to Wiring Diagram.

   Continuity should exist.

3. Also check harness for short to power.

OK or NG

OK >> GO TO 9.
NG >> Repair open circuit or short to power in harness or connectors.

9. CHECK CONDENSER

Refer to EC-1229, "Component Inspection"

OK or NG

OK >> GO TO 10.
NG >> Replace condenser.

10. CHECK IGNITION COIL POWER SUPPLY CIRCUIT-IV

1. Turn ignition switch OFF.
2. Reconnect all harness connectors disconnected.
3. Disconnect ignition coil (1) harness connector.
   – Fuel injector (2)
4. Turn ignition switch ON.

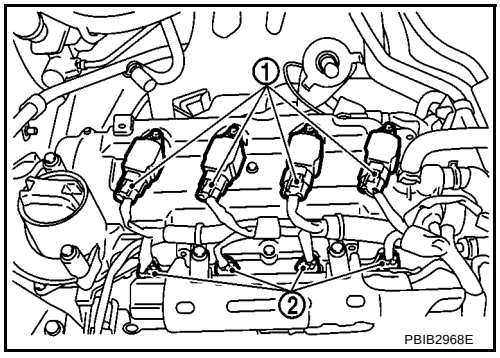

5. Check voltage between ignition coil terminal 1 and ground with CONSULT-II or tester.

   Voltage: Battery voltage

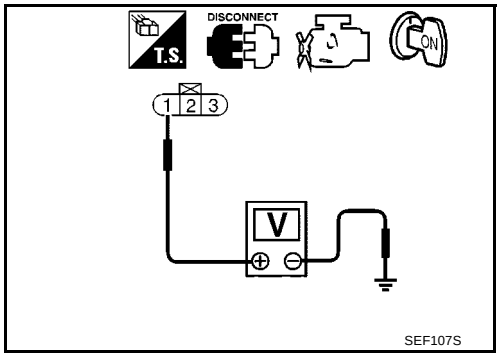

OK or NG

OK >> GO TO 12.
NG >> GO TO 11.

11. DETECT MALFUNCTIONING PART

Check the following.

- Harness connector F1
- Harness for open or short between ignition coil and harness connector F1

>> Repair or replace harness or connectors.

12. CHECK IGNITION COIL GROUND CIRCUIT FOR OPEN AND SHORT

1. Turn ignition switch OFF.
2. Check harness continuity between ignition coil terminal 2 and ground.
   Refer to Wiring Diagram.

   Continuity should exist.

3. Also check harness for short to power.

OK or NG

OK >> GO TO 13.
NG >> Repair open circuit or short to power in harness or connectors.

13. CHECK IGNITION COIL OUTPUT SIGNAL CIRCUIT FOR OPEN AND SHORT

1. Disconnect ECM harness connector.
2. Check harness continuity between ECM terminals 17, 18, 21, 22 and ignition coil terminal 3.
   Refer to Wiring Diagram.

   Continuity should exist.

3. Also check harness for short to ground and short to power.

OK or NG

OK >> GO TO 14.
NG >> Repair open circuit or short to ground or short to power in harness or connectors.

14. CHECK IGNITION COIL WITH POWER TRANSISTOR

Refer to EC-1229, "Component Inspection" .

OK or NG

OK >> GO TO 15.
NG >> Replace ignition coil with power transistor.

15. CHECK INTERMITTENT INCIDENT

Refer to EC-917, "TROUBLE DIAGNOSIS FOR INTERMITTENT INCIDENT" .

>> **INSPECTION END**

Component Inspection

BBS004JI

IGNITION COIL WITH POWER TRANSISTOR

CAUTION:

Do the following procedure in the place where ventilation is good without the combustible.

1. Turn ignition switch OFF.
2. Disconnect ignition coil harness connector.
3. Check resistance between ignition coil terminals as follows.

Terminal No. (Polarity)	Resistance Ω [at 25°C (77°F)]
1 and 2	Except 0 or ∞
1 and 3	Except 0
2 and 3	

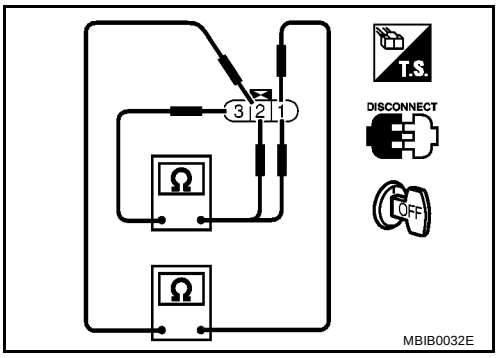

4. If NG, replace ignition coil with power transistor.
   If OK, go to next step.
5. Turn ignition switch OFF.
6. Reconnect all harness connectors disconnected.

7. Remove fuel pump fuse in IPDM E/R to release fuel pressure.

   NOTE:
   Do not use CONSULT-II to release fuel pressure, or fuel pressure applies again during the following procedure.
8. Start engine.
9. After engine stalls, crank it two or three times to release all fuel pressure.
10. Turn ignition switch OFF.
11. Remove all ignition coil harness connectors to avoid the electrical discharge from the ignition coils.
12. Remove ignition coil and spark plug of the cylinder to be checked.

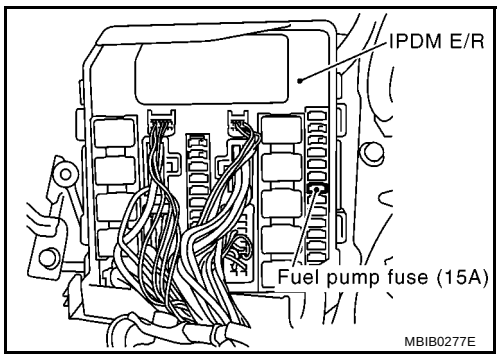

13. Crank engine for 5 seconds or more to remove combustion gas in the cylinder.
14. Connect spark plug and harness connector to ignition coil.
15. Fix ignition coil using a rope etc. with gap of 13 - 17 mm between the edge of the spark plug and grounded metal portion as shown in the figure.
16. Crank engine for about three seconds, and check whether spark is generated between the spark plug and the grounded metal portion.

    Spark should be generated.

    CAUTION:
    - **Do not approach to the spark plug and the ignition coil within 50cm. Be careful not to get an electrical shock while checking, because the electrical discharge voltage becomes 20kV or more.**
    - **It might cause to damage the ignition coil if the gap of more than 17 mm is taken.**

    NOTE:
    When the gap is less than 13 mm, the spark might be generated even if the coil is malfunctioning.

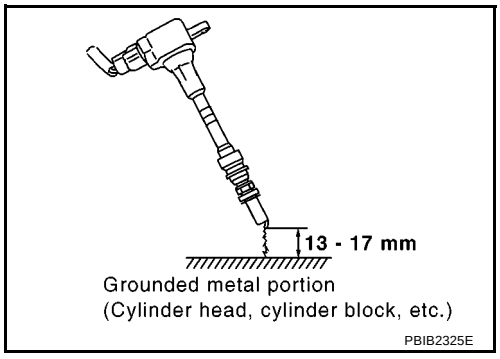

17. If NG, replace ignition coil with power transistor.

CONDENSER

1. Turn ignition switch OFF.
2. Disconnect condenser harness connector.
3. Check resistance between condenser terminals 1 and 2.

   Resistance: **Above 1 MΩ at 25°C (77°F)**

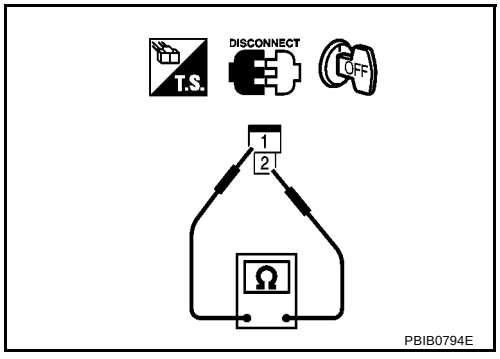

Removal and Installation

BBS004JJ

IGNITION COIL WITH POWER TRANSISTOR

Refer to EM-132, "IGNITION COIL" .

REFRIGERANT PRESSURE SENSOR

PFP:92136

Component Description

BBS004JK

The refrigerant pressure sensor (1) is installed at the condenser of the air conditioner system. The sensor uses an electrostatic volume pressure transducer to convert refrigerant pressure to voltage. The voltage signal is sent to ECM, and ECM controls cooling fan system.

- ⇦: Vehicle front

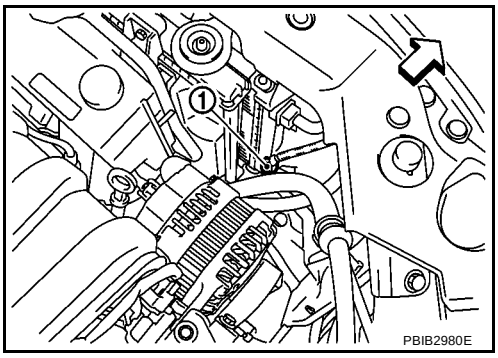

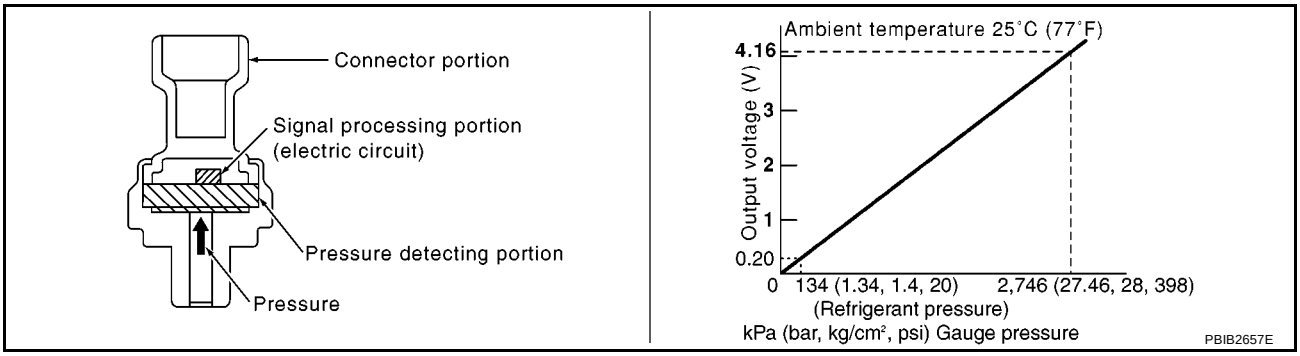

Wiring Diagram

BBS004JL

EC-RP/SEN-01

: DETECTABLE LINE FOR DTC
: NON-DETECTABLE LINE FOR DTC

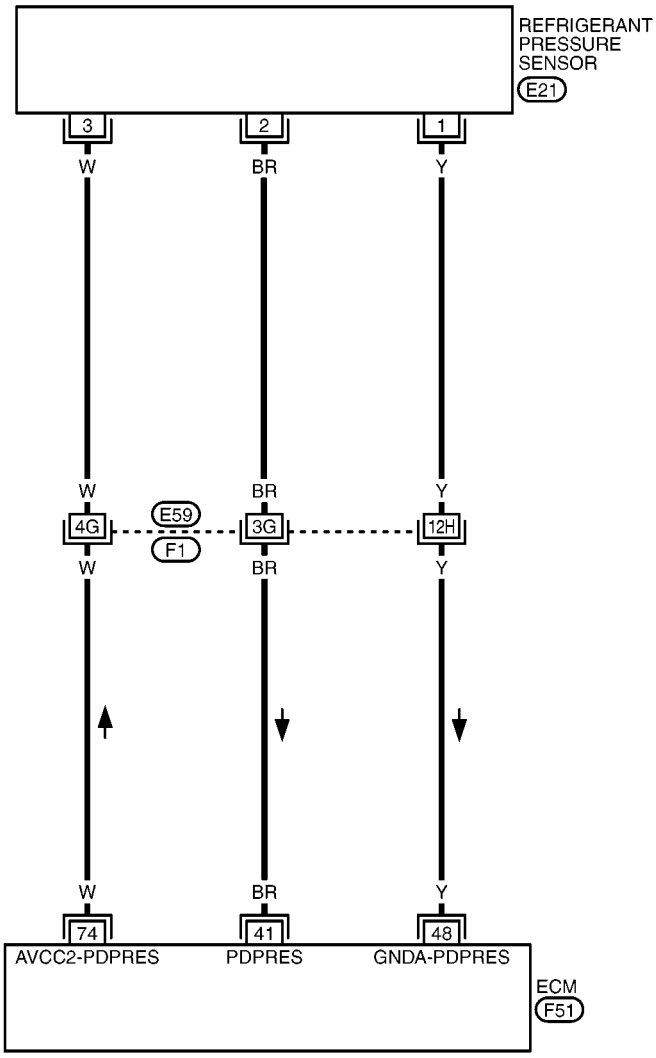

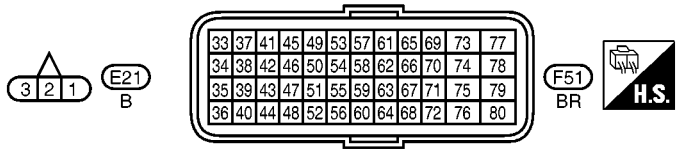

REFER TO THE FOLLOWING.
F1 - SUPER MULTIPLE JUNCTION (SMJ)

MBWA1493E

Specification data are reference values and are measured between each terminal and ground.

CAUTION:
Do not use ECM ground terminals when measuring input/output voltage. Doing so may result in damage to the ECM's transistor. Use a ground other than ECM terminals, such as the ground.

TERMINAL NO.	WIRE COLOR	ITEM	CONDITION	DATA (DC Voltage)
41	BR	Refrigerant pressure sensor	**[Engine is running]** ● **Warm-up condition** ● Both A/C switch and blower fan switch: ON (Compressor operates)	1.0 - 4.0V
48	Y	Sensor ground (Refrigerant pressure sensor)	**[Engine is running]** ● **Warm-up condition** ● Idle speed	Approximately 0V
74	W	Sensor power supply (Refrigerant pressure sensor)	**[Ignition switch: ON]**	Approximately 5V

Diagnostic Procedure

BBS004JM

1. CHECK REFRIGERANT PRESSURE SENSOR OVERALL FUNCTION

1. Start engine and warm it up to normal operating temperature.
2. Turn A/C switch and blower fan switch ON.
3. Check voltage between ECM terminal 41 and ground with CONSULT-II or tester.

Voltage: 1.0 - 4.0V

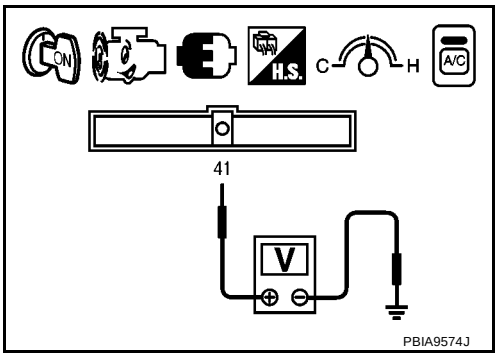

OK or NG

OK >> **INSPECTION END**
NG >> GO TO 2.

2. CHECK GROUND CONNECTIONS

1. Turn A/C switch and blower fan switch OFF.
2. Stop engine.
3. Loosen and retighten ground screws on the body.
Refer to EC-924, "Ground Inspection" .

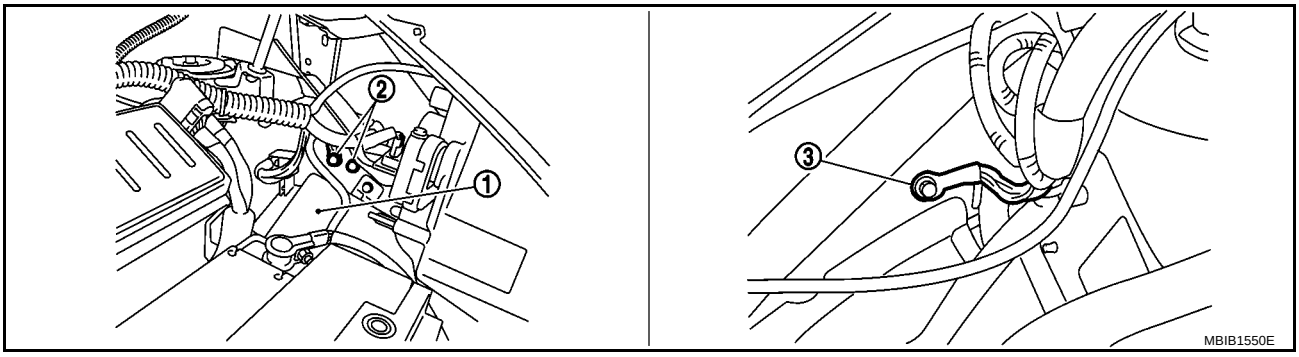

1. IPDM E/R 2. Body ground 3. Body ground

OK or NG

OK >> GO TO 3.
NG >> Repair or replace ground connections.

3. CHECK REFRIGERANT PRESSURE SENSOR POWER SUPPLY CIRCUIT

1. Disconnect refrigerant pressure sensor (1) harness connector.
- ⇦: Vehicle front
2. Turn ignition switch ON.

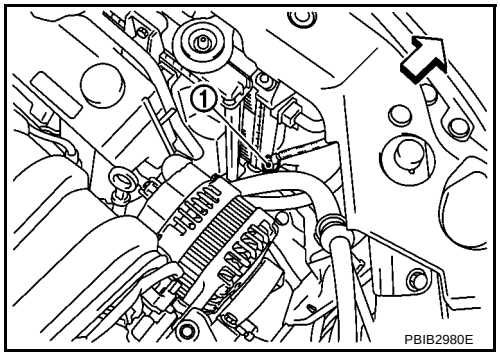

3. Check voltage between refrigerant pressure sensor terminal 3 and ground with CONSULT-II or tester.

Voltage: Approximately 5V

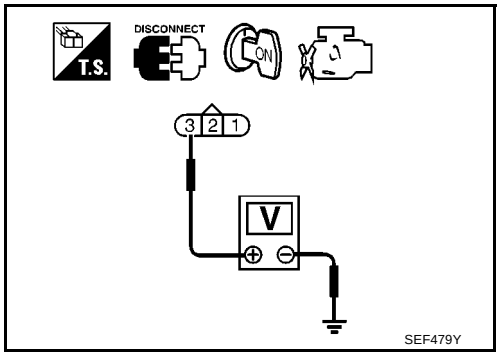

OK or NG

OK >> GO TO 5.
NG >> GO TO 4.

4. DETECT MALFUNCTIONING PART

Check the following.

- Harness connectors E59, F1
- Harness for open or short between refrigerant pressure sensor and ECM

>> Repair open circuit or short to ground or short to power in harness or connectors.

5. CHECK REFRIGERANT PRESSURE SENSOR GROUND CIRCUIT FOR OPEN AND SHORT

1. Turn ignition switch OFF.
2. Disconnect ECM harness connector.
3. Check harness continuity between refrigerant pressure sensor terminal 1 and ECM terminal 48. Refer to Wiring Diagram.

Continuity should exist.

4. Also check harness for short to ground and short to power.

OK or NG

OK >> GO TO 7.
NG >> GO TO 6.

6. DETECT MALFUNCTIONING PART

Check the following.

- Harness connectors E59, F1
- Harness for open or short between refrigerant pressure sensor and ECM

>> Repair open circuit or short to ground or short to power in harness or connectors.

7. CHECK REFRIGERANT PRESSURE SENSOR INPUT SIGNAL CIRCUIT FOR OPEN AND SHORT

1. Check harness continuity between refrigerant pressure sensor terminal 2 and ECM terminal 41. Refer to Wiring Diagram.

   Continuity should exist.

2. Also check harness for short to ground and short to power.

OK or NG

OK >> GO TO 9.
NG >> GO TO 8.

8. DETECT MALFUNCTIONING PART

Check the following.

- Harness connectors E59, F1
- Harness for open or short between refrigerant pressure sensor and ECM

>> Repair open circuit or short to ground or short to power in harness or connectors.

9. CHECK INTERMITTENT INCIDENT

Refer to EC-917, "TROUBLE DIAGNOSIS FOR INTERMITTENT INCIDENT" .

OK or NG

OK >> Replace refrigerant pressure sensor.
NG >> Repair or replace.

Removal and Installation

BBS004JN

REFRIGERANT PRESSURE SENSOR

Refer to ATC-135, "REFRIGERANT LINES" or MTC-81, "REFRIGERANT LINES" .

MI & DATA LINK CONNECTORS

PFP:24814

Wiring Diagram

BBS004JO

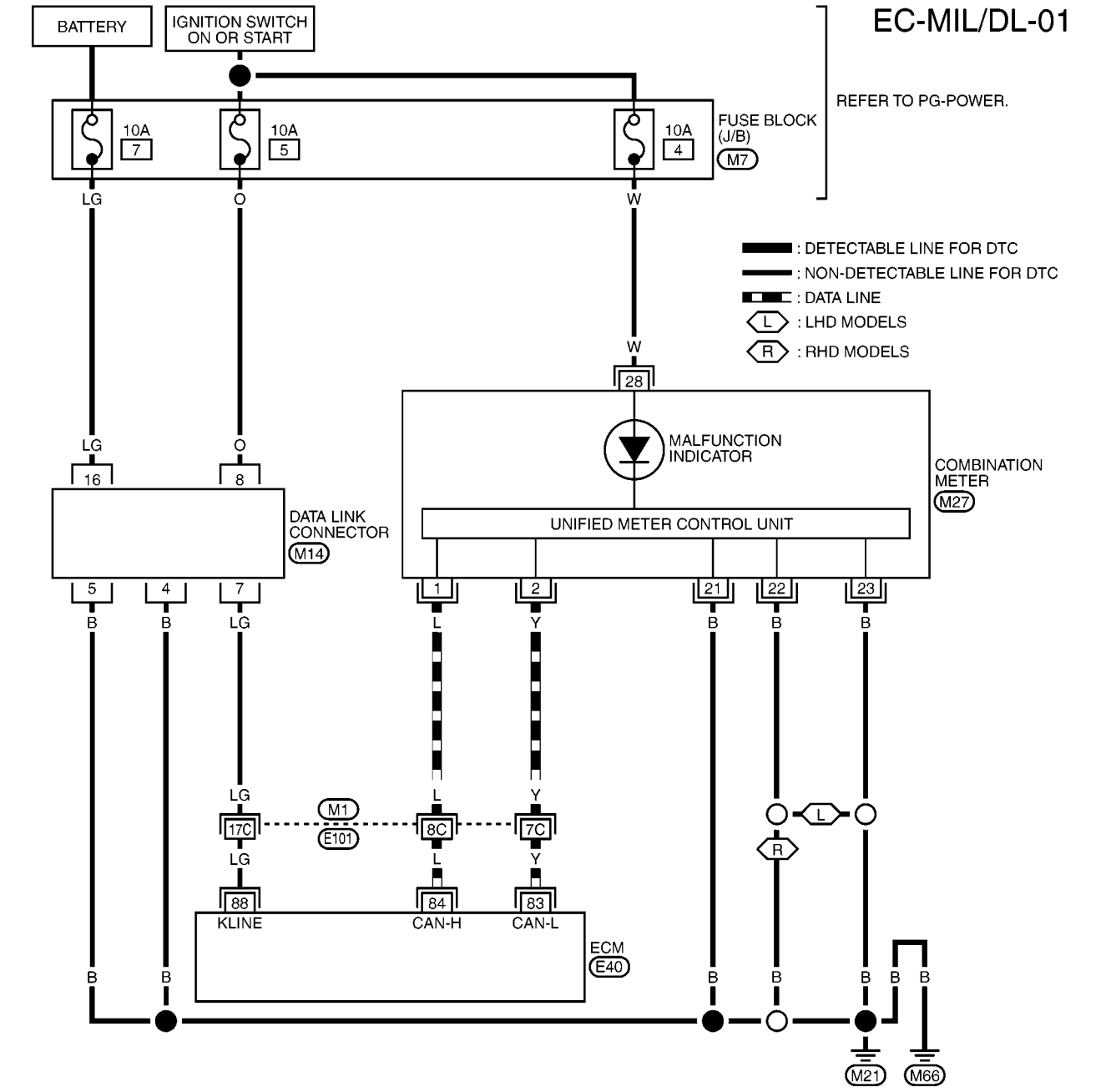

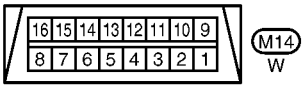

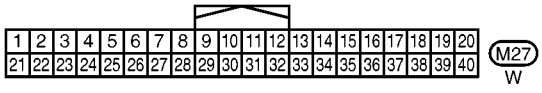

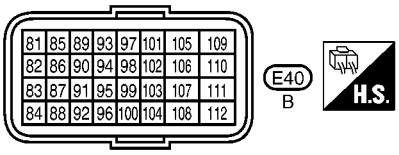

REFER TO THE FOLLOWING.
M1 - SUPER MULTIPLE JUNCTION (SMJ)
M7 - FUSE BLOCK - JUNCTION BOX (J/B)

MBWA1494E

SERVICE DATA AND SPECIFICATIONS (SDS)

PFP:00030

Fuel Pressure

BBS004JP

Fuel pressure at idle	Approximately 350 kPa (3.5 bar, 3.57 kg/cm^2 , 51 psi)

Idle Speed and Ignition Timing

BBS004JQ

Target idle speed	A/T	No load* (in P or N position)	700 ± 50 rpm
	M/T	No load* (in Neutral position)	650 ± 50 rpm
Air conditioner: ON	A/T	In P or N position	700 rpm or more
	M/T	In Neutral position	750 rpm or more
Ignition timing	A/T	In P or N position	6 ± 5° BTDC
	M/T	In Neutral position	

*: Under the following conditions:

- Air conditioner switch: OFF
- Electric load: OFF (Lights, heater fan & rear window defogger)
- Steering wheel: Kept in straight-ahead position

Calculated Load Value

BBS004JR

	Calculated load value% (Using CONSULT-II or GST)
At idle	10 - 35
At 2,500 rpm	10 - 35

Mass Air Flow Sensor

BBS004JS

Supply voltage	Battery voltage (11 - 14V)
Output voltage at idle	1.0 - 1.3*V
Mass air flow (Using CONSULT-II or GST)	1.0 - 4.0 g·m/sec at idle* 2.0 - 10.0 g·m/sec at 2,500 rpm*

*: Engine is warmed up to normal operating temperature and running under no load.

Intake Air Temperature Sensor

BBS004JT

Temperature °C (°F)	Resistance kΩ
25 (77)	1.800 - 2.200
80 (176)	0.283 - 0.359

Engine Coolant Temperature Sensor

BBS004JU

Temperature °C (°F)	Resistance kΩ
20 (68)	2.1 - 2.9
50 (122)	0.68 - 1.00
90 (194)	0.236 - 0.260

Knock Sensor

BBS00584

Resistance [at 20°C (68°F)]	Approximately 530 – 590kΩ

Heated Oxygen Sensor 1 Heater

BBS004JV

Resistance [at 25°C (77°F)]	3.4 - 4.4Ω

Heated Oxygen sensor 2 Heater

BBS004JW

Resistance [at 25°C (77°F)]	3.4 - 4.4Ω

Crankshaft Position Sensor (POS)

BBS004JX

Refer to EC-1048, "Component Inspection" .

Camshaft Position Sensor (PHASE)

BBS004JY

Refer to EC-1054, "Component Inspection" .

Intake Valve Timing Control Solenoid Valve

BBS00585

Resistance [at 20°C (68°F)]	6.7 – 7.7Ω

Throttle Control Motor

BBS004JZ

Resistance [at 25°C (77°F)]	Approximately 1 - 15Ω

Fuel Injector

BBS004K0

Resistance [at 10 - 60°C (50 - 140°F)]	11.1 - 14.5Ω

Fuel Pump

BBS004K1

Resistance [at 25°C (77°F)]	Approximately 0.2 - 5.0Ω

INDEX FOR DTC

PFP:00024

DTC No. Index

BBS004K2

NOTE:

- **If DTC U1000 or U1001 is displayed with other DTC, first perform the trouble diagnosis for DTC U1000, U1001. Refer to EC-1344, "DTC U1000, U1001 CAN COMMUNICATION LINE" .**
- **If DTC U1010 is displayed with other DTC, first perform the trouble diagnosis for DTC U1010. Refer to EC-1347, "DTC U1010 CAN COMMUNICATION" .**

DTC*1		Items (CONSULT-II screen terms)	Reference page
CONSULT-II	ECM*2		
U1000	1000*3	CAN COMM CIRCUIT	EC-1344
U1001	1001*3	CAN COMM CIRCUIT	EC-1344
U1010	1010	CONTROL UNIT(CAN)	EC-1347
P0000	Flashing*4	NO DTC IS DETECTED. FURTHER TESTING MAY BE REQUIRED.	EC-1269
P0000	**0000**	**NO DTC IS DETECTED. FURTHER TESTING MAY BE REQUIRED.**	**—**
P0011	0011	INT/V TIM CONT-B1	EC-1349
P0102	0102	MAF SEN/CIRCUIT	EC-1354
P0103	0103	MAF SEN/CIRCUIT	EC-1354
P0117	0117	ECT SEN/CIRC	EC-1361
P0118	0118	ECT SEN/CIRC	EC-1361
P0122	0122	TP SEN 2/CIRC	EC-1367
P0123	0123	TP SEN 2/CIRC	EC-1367
P0132	0132	HO2S1 (B1)	EC-1373
P0134	0134	HO2S1 (B1)	EC-1381
P0138	0138	HO2S2 (B1)	EC-1388
P0222	0222	TP SEN 1/CIRC	EC-1395
P0223	0223	TP SEN 1/CIRC	EC-1395
P0327	0327	KNOCK SEN/CIRC-B1	EC-1401
P0328	0328	KNOCK SEN/CIRC-B1	EC-1401
P0335	0335	CKP SEN/CIRCUIT	EC-1405
P0340	0340	CMP SEN/CIRC-B1	EC-1413
P0605	0605	ECM	EC-1420
P1065	1065	ECM BACK UP/CIRCUIT*5	EC-1423
P1111	1111	INT/V TIM V/CIR-B1	EC-1425
P1121	1121	ETC ACTR	EC-1430
P1122	1122	ETC FUNCTION/CIRC	EC-1433
P1124	1124	ETC MOT PWR	EC-1439
P1126	1126	ETC MOT PWR	EC-1439
P1128	1128	ETC MOT	EC-1445
P1212	1212	TCS/CIRC	EC-1450
P1217	1217	ENG OVER TEMP	EC-1451
P1225	1225	CTP LEARNING	EC-1467
P1226	1226	CTP LEARNING	EC-1469

DTC*1		Items (CONSULT-II screen terms)	Reference page
CONSULT-II	ECM*2		
P1229	1229	SENSOR POWER/CIRC	EC-1471
P1610 - P1615	1610 - 1615	NATS MALFUNCTION	BL-215
P1706	1706	P-N POS SW/CIRCUIT	EC-1479
P1805	1805	BRAKE SW/CIRCUIT	EC-1487
P2122	2122	APP SEN 1/CIRC	EC-1492
P2123	2123	APP SEN 1/CIRC	EC-1492
P2127	2127	APP SEN 2/CIRC	EC-1501
P2128	2128	APP SEN 2/CIRC	EC-1501
P2135	2135	TP SENSOR	EC-1511
P2138	2138	APP SENSOR	EC-1517

*1: 1st trip DTC No. is the same as DTC No.
*2: In Diagnostic Test Mode II (Self-diagnostic results).
*3: The troubleshooting for this DTC needs CONSULT-II.
*4: When engine is running, MI may flash. For details, refer to EC-1269, "MI Flashing Without DTC" .
*5: This self-diagnosis is not for ECM power supply circuit, even though “ECM BACK UP/CIRCUIT” is displayed on CONSULT-II screen.

Alphabetical Index

BBS004K3

NOTE:

- **If DTC U1000 or U1001 is displayed with other DTC, first perform the trouble diagnosis for DTC U1000, U1001. Refer to EC-1344, "DTC U1000, U1001 CAN COMMUNICATION LINE" .**
- **If DTC U1010 is displayed with other DTC, first perform the trouble diagnosis for DTC U1010. Refer to EC-1347, "DTC U1010 CAN COMMUNICATION" .**

Items (CONSULT-II screen terms)	DTC*1		Reference page
	CONSULT-II	ECM*2	
APP SEN 1/CIRC	P2122	2122	EC-1492
APP SEN 1/CIRC	P2123	2123	EC-1492
APP SEN 2/CIRC	P2127	2127	EC-1501
APP SEN 2/CIRC	P2128	2128	EC-1501
APP SENSOR	P2138	2138	EC-1517
BRAKE SW/CIRCUIT	P1805	1805	EC-1487
CAN COMM CIRCUIT	U1000	1000*3	EC-1344
CAN COMM CIRCUIT	U1001	1001*3	EC-1344
CONTROL UNIT(CAN)	U1010	1010	EC-1347
CKP SEN/CIRCUIT	P0335	0335	EC-1405
CMP SEN/CIRC-B1	P0340	0340	EC-1413
CTP LEARNING	P1225	1225	EC-1467
CTP LEARNING	P1226	1226	EC-1469
ECM	P0605	0605	EC-1420
ECM BACK UP/CIRCUIT*5	P1065	1065	EC-1423
ECT SEN/CIRC	P0117	0117	EC-1361
ECT SEN/CIRC	P0118	0118	EC-1361
ENG OVER TEMP	P1217	1217	EC-1451
ETC ACTR	P1121	1121	EC-1430
ETC FUNCTION/CIRC	P1122	1122	EC-1433
ETC MOT	P1128	1128	EC-1445
ETC MOT PWR	P1124	1124	EC-1439
ETC MOT PWR	P1126	1126	EC-1439
HO2S1 (B1)	P0132	0132	EC-1373
HO2S1 (B1)	P0134	0134	EC-1381
HO2S2 (B1)	P0138	0138	EC-1388
INT/V TIM CONT-B1	P0011	0011	EC-1349
INT/V TIM V/CIR-B1	P1111	1111	EC-1425
KNOCK SEN/CIRC-B1	P0327	0327	EC-1401
KNOCK SEN/CIRC-B1	P0328	0328	EC-1401
MAF SEN/CIRCUIT	P0102	0102	EC-1354
MAF SEN/CIRCUIT	P0103	0103	EC-1354
NATS MALFUNCTION	P1610 - P1615	1610 - 1615	BL-215
NO DTC IS DETECTED. FURTHER TESTING MAY BE REQUIRED.	No DTC	Flashing*4	EC-1269

Items (CONSULT-II screen terms)	DTC*1		Reference page
	CONSULT-II	ECM*2	
NO DTC IS DETECTED. FURTHER TESTING MAY BE REQUIRED.	**P0000**	**0000**	**—**
P-N POS SW/CIRCUIT	P1706	1706	EC-1479
SENSOR POWER/CIRC	P1229	1229	EC-1471
TCS/CIRC	P1212	1212	EC-1450
TP SEN 1/CIRC	P0222	0222	EC-1395
TP SEN 1/CIRC	P0223	0223	EC-1395
TP SEN 2/CIRC	P0122	0122	EC-1367
TP SEN 2/CIRC	P0123	0123	EC-1367
TP SENSOR	P2135	2135	EC-1511

*1: 1st trip DTC No. is the same as DTC No.
*2: In Diagnostic Test Mode II (Self-diagnostic results).
*3: The troubleshooting for this DTC needs CONSULT-II.
*4: When engine is running, MI may flash. For details, refer to EC-1269, "MI Flashing Without DTC" .
*5: This self-diagnosis is not for ECM power supply circuit, even though “ECM BACK UP/CIRCUIT” is displayed on CONSULT-II screen.

PRECAUTIONS

PFP:00001

Precautions for Supplemental Restraint System (SRS) “AIR BAG” and “SEAT BELT PRE-TENSIONER”

BBS004K4

The Supplemental Restraint System such as “AIR BAG” and “SEAT BELT PRE-TENSIONER”, used along with a front seat belt, helps to reduce the risk or severity of injury to the driver and front passenger for certain types of collision. Information necessary to service the system safely is included in the SRS and SB section of this Service Manual.

WARNING:

- **To avoid rendering the SRS inoperative, which could increase the risk of personal injury or death in the event of a collision which would result in air bag inflation, all maintenance must be performed by an authorized NISSAN/INFINITI dealer.**
- **Improper maintenance, including incorrect removal and installation of the SRS, can lead to personal injury caused by unintentional activation of the system. For removal of Spiral Cable and Air Bag Module, see the SRS section.**
- **Do not use electrical test equipment on any circuit related to the SRS unless instructed to in this Service Manual. SRS wiring harnesses can be identified by yellow and/or orange harnesses or harness connectors.**

Maintenance Information

BBS005AT

If any of following part is replaced, always replace with new* one.
If it's not (or fail to do so), the electrical system may not be operated properly.
*: New one means a virgin control unit that has never been energized on-board.

RHD MODELS

- BCM (Models without Intelligent Key system)
- Intelligent Key unit (Models with Intelligent Key system)
- ECM
- IPDM E/R
- Combination meter
- EPS control unit

LHD MODELS

- BCM (Models without Intelligent Key system)
- Intelligent Key unit (Models with Intelligent Key system)
- ECM

Precautions for Procedures without Cowl Top Cover

BBS00586

When performing the procedure after removing cowl top cover, cover the lower end of windshield with urethane, etc.

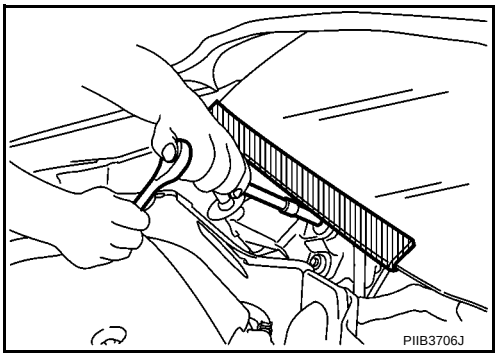

On Board Diagnostic (OBD) System of Engine

BBS004K6

The ECM has an on board diagnostic system. It will light up the malfunction indicator (MI) to warn the driver of a malfunction causing emission deterioration.

CAUTION:

- **Be sure to turn the ignition switch OFF and disconnect the negative battery cable before any repair or inspection work. The open/short circuit of related switches, sensors, solenoid valves, etc. will cause the MI to light up.**

- **Be sure to connect and lock the connectors securely after work. A loose (unlocked) connector will cause the MI to light up due to the open circuit. (Be sure the connector is free from water, grease, dirt, bent terminals, etc.)**
- **Certain systems and components, especially those related to OBD, may use a new style slide-locking type harness connector. For description and how to disconnect, refer to PG-88, "HARNESS CONNECTOR" .**
- **Be sure to route and secure the harnesses properly after work. The interference of the harness with a bracket, etc. may cause the MI to light up due to the short circuit.**
- **Be sure to erase the unnecessary malfunction information (repairs completed) from the ECM before returning the vehicle to the customer.**

Precaution

BBS004K7

- **Always use a 12 volt battery as power source.**
- **Do not attempt to disconnect battery cables while engine is running.**
- **Before connecting or disconnecting the ECM harness connector, turn ignition switch OFF and disconnect negative battery cable. Failure to do so may damage the ECM because battery voltage is applied to ECM even if ignition switch is turned OFF.**
- **Before removing parts, turn ignition switch OFF and then disconnect negative battery cable.**

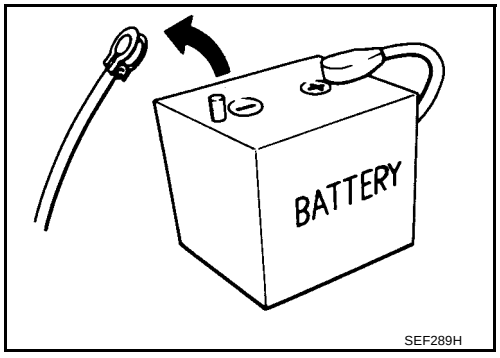

SEF289H

- **Do not disassemble ECM.**
- **If a battery cable is disconnected, the memory will return to the ECM value.**
  The ECM will now start to self-control at its initial value. Engine operation can vary slightly when the terminal is disconnected. However, this is not an indication of a malfunction. Do not replace parts because of a slight variation.
- **If the battery is disconnected, the following emission-related diagnostic information will be lost within 24 hours.**
  - **Diagnostic trouble codes**
  - **1st trip diagnostic trouble codes**
  - **Freeze frame data**
  - **1st trip freeze frame data**

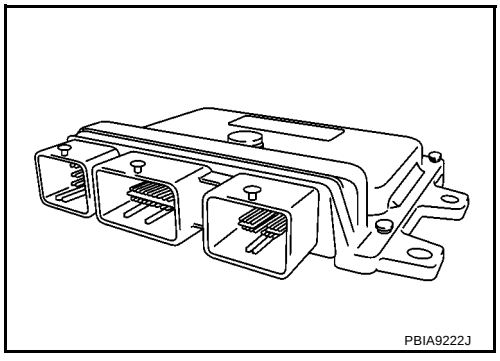
PBIA9222J

- **When connecting ECM harness connector, fasten (B) it securely with a lever (1) as far as it will go as shown in the figure.**
  - ECM (2)
  - Loosen (A)

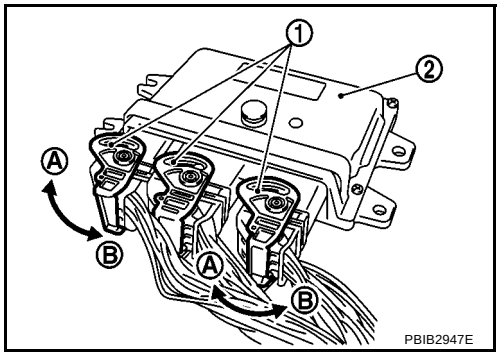

PBIB2947E

- When connecting or disconnecting pin connectors into or from ECM, take care not to damage pin terminals (bend or break).
  Make sure that there are not any bends or breaks on ECM pin terminal, when connecting pin connectors.

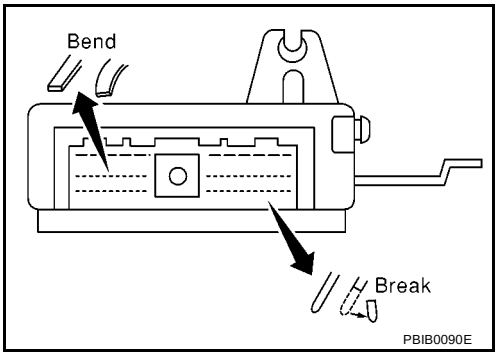

- Securely connect ECM harness connectors.
  A poor connection can cause an extremely high (surge) voltage to develop in coil and condenser, thus resulting in damage to ICs.
- Keep engine control system harness at least 10 cm (4 in) away from adjacent harness, to prevent engine control system malfunctions due to receiving external noise, degraded operation of ICs, etc.
- Keep engine control system parts and harness dry.
- Before replacing ECM, perform ECM Terminals and Reference Value inspection and make sure ECM functions properly. Refer to EC-1304, "ECM Terminals and Reference Value" .

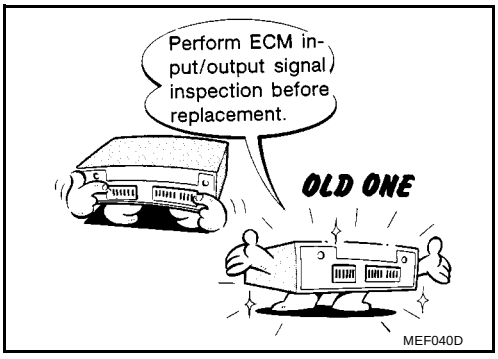

- Handle mass air flow sensor carefully to avoid damage.
- Do not clean mass air flow sensor with any type of detergent.
- Do not disassemble electric throttle control actuator.
- Even a slight leak in the air intake system can cause serious incidents.
- Do not shock or jar the camshaft position sensor (PHASE), crankshaft position sensor (POS).
- After performing each TROUBLE DIAGNOSIS, perform DTC Confirmation Procedure or Overall Function Check.
  The DTC should not be displayed in the DTC Confirmation Procedure if the repair is completed. The Overall Function Check should be a good result if the repair is completed.

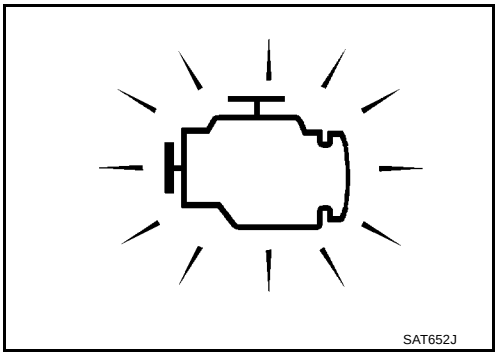

- **When measuring ECM signals with a circuit tester, never allow the two tester probes to contact.**
  Accidental contact of probes will cause a short circuit and damage the ECM power transistor.
- **Do not use ECM ground terminals when measuring input/output voltage. Doing so may result in damage to the ECM's transistor. Use a ground other than ECM terminals, such as the ground.**

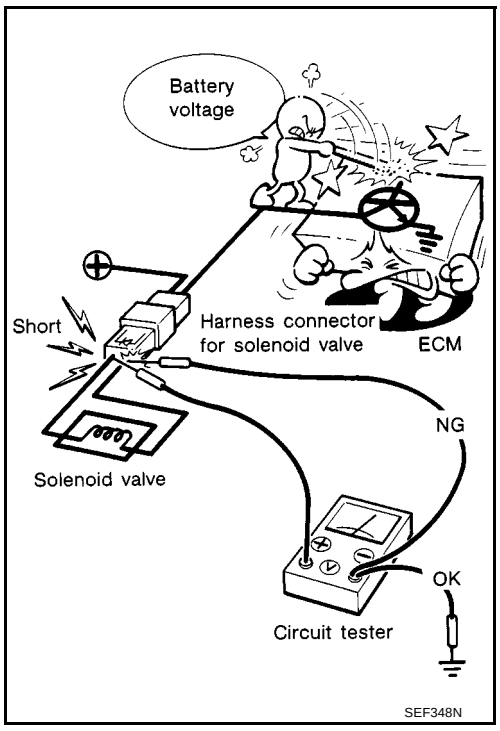

- **Do not operate fuel pump when there is no fuel in lines.**
- **Tighten fuel hose clamps to the specified torque.**

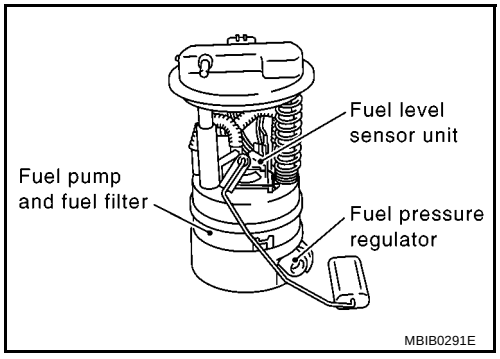

- **Do not depress accelerator pedal when starting.**
- **Immediately after starting, do not rev up engine unnecessarily.**
- **Do not rev up engine just prior to shutdown.**

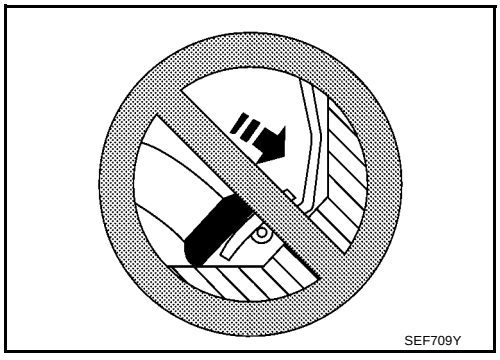

- **When installing C.B. ham radio or a mobile phone, be sure to observe the following as it may adversely affect electronic control systems depending on installation location.**
  - **Keep the antenna as far as possible from the electronic control units.**
  - **Keep the antenna feeder line more than 20 cm (8 in) away from the harness of electronic controls.**
    Do not let them run parallel for a long distance.
  - **Adjust the antenna and feeder line so that the standing-wave radio can be kept smaller.**

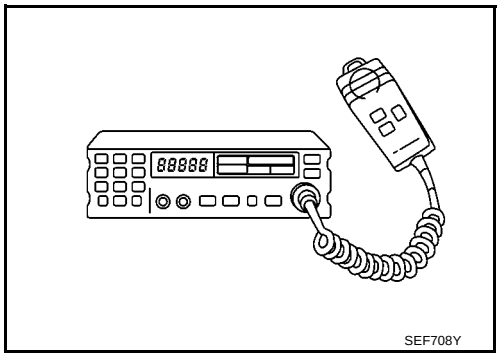

- **Be sure to ground the radio to vehicle body.**

PREPARATION

PFP:00002

Special Service Tools

BBS004K8

Tool number Tool name		Description
KV10117100 Heated oxygen sensor wrench	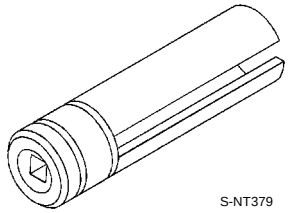 S-NT379	Loosening or tightening heated oxygen sensor with 22 mm (0.87 in) hexagon nut
KV10114400 Heated oxygen sensor wrench	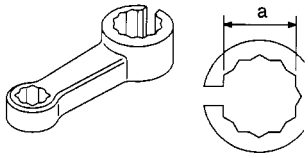 S-NT636	Loosening or tightening heated oxygen sensor **a: 22 mm (0.87 in)**
EG17650301 Radiator cap tester adapter	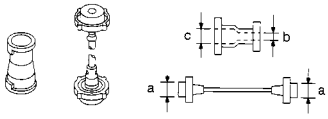 S-NT564	Adapting radiator cap tester to radiator cap and radiator filler neck **a: 28 (1.10) dia.** **b: 31.4 (1.236) dia.** **c: 41.3 (1.626) dia.** Unit: mm (in)
EG17550000 Break-out box	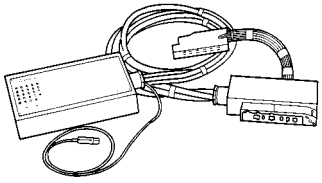 ZZA1194D	Measuring ECM signals with a circuit tester
EG17680000 Y-cable adapter	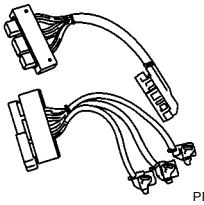 PBIA9379J	Measuring ECM signals with a circuit tester
KV10118400 Fuel tube adapter	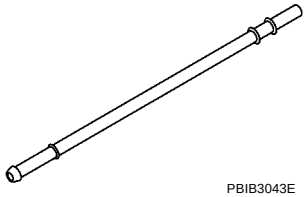 PBIB3043E	Measuring fuel pressure

Commercial Service Tools

BBS004K9

Tool name		Description
Quick connector release	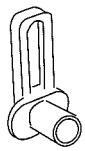 PBIC0198E	Removing fuel tube quick connectors in engine room (Available in SEC. 164 of PARTS CATALOG: Part No. 16441 6N210)
Fuel filler cap adapter	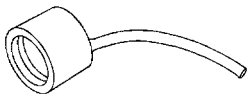 S-NT653	Checking fuel tank vacuum relief valve opening pressure
Socket wrench	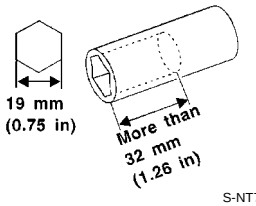 S-NT705	Removing and installing engine coolant temperature sensor
Oxygen sensor thread cleaner	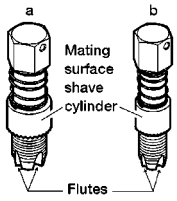 AEM488	Reconditioning the exhaust system threads before installing a new oxygen sensor. Use with anti-seize lubricant shown below. **a: 18 mm diameter with pitch 1.5 mm for Zirconia Oxygen Sensor** **b: 12 mm diameter with pitch 1.25 mm for Titania Oxygen Sensor**
Anti-seize lubricant i.e.: (Permatex™ 133AR or equivalent meeting MIL specification MIL-A-907)	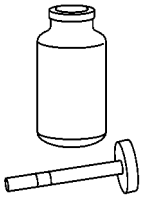 S-NT779	Lubricating oxygen sensor thread cleaning tool when reconditioning exhaust system threads.

ENGINE CONTROL SYSTEM

PFP:23710

System Diagram

BBS004KA

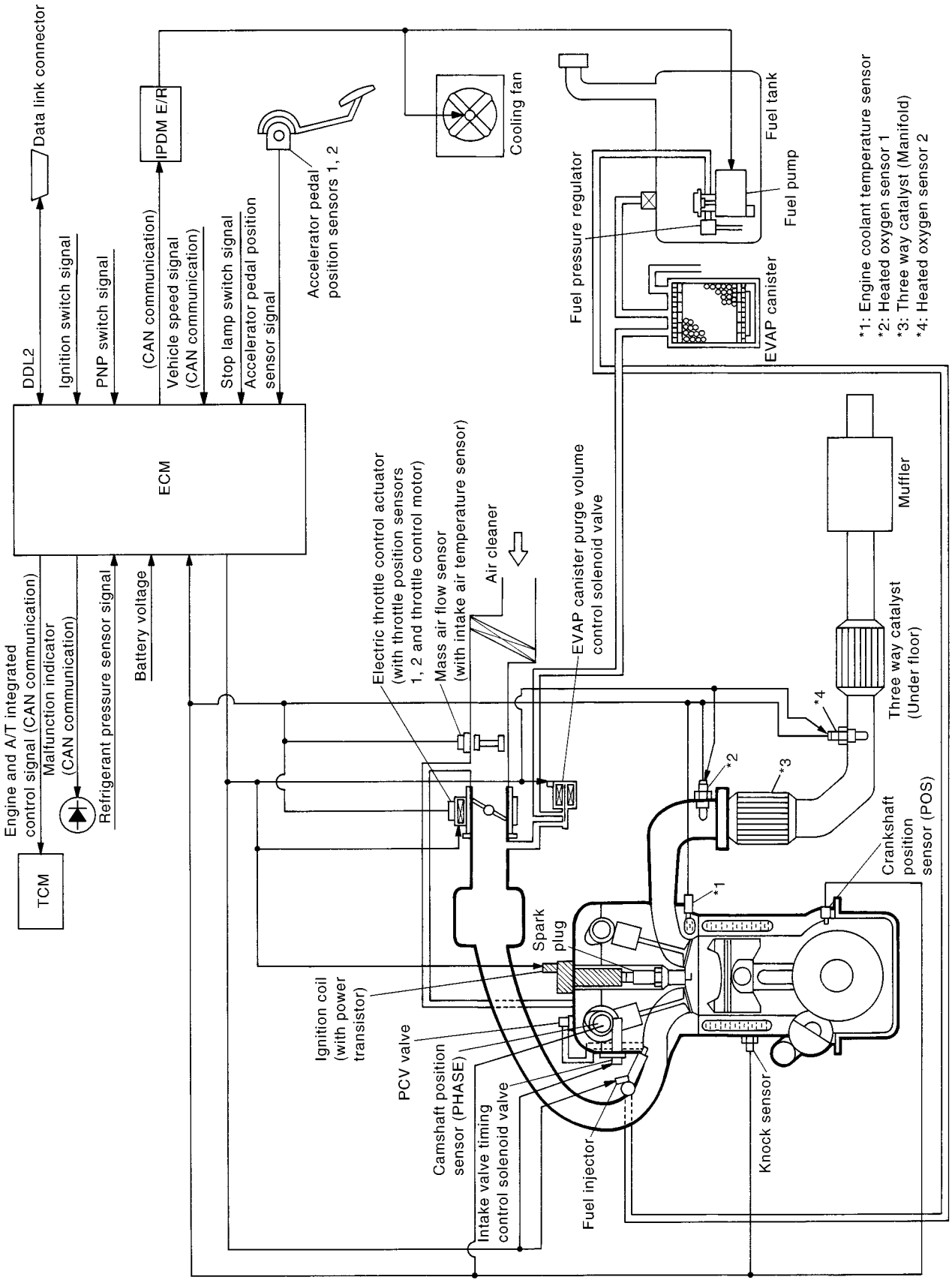

MBIB1449E

Multiport Fuel Injection (MFI) System

BBS004KB

INPUT/OUTPUT SIGNAL CHART

Sensor	Input Signal to ECM	ECM function	Actuator
Crankshaft position sensor (POS)	Engine speed*3 Piston position	Fuel injection & mixture ratio control	Fuel injector
Camshaft position sensor (PHASE)			
Mass air flow sensor	Amount of intake air		
Engine coolant temperature sensor	Engine coolant temperature		
Heated oxygen sensor 1	Density of oxygen in exhaust gas		
Throttle position sensor	Throttle position		
Accelerator pedal position sensor	Accelerator pedal position		
Park/neutral position (PNP) switch	Gear position		
Battery	Battery voltage*3		
Knock sensor	Engine knocking condition		
EPS control unit	Power steering operation*2		
Heated oxygen sensor 2*1	Density of oxygen in exhaust gas		
Air conditioner switch	Air conditioner operation*2		
Wheel sensor	Vehicle speed*2		

*1: This sensor is not used to control the engine system under normal conditions.
*2: This signal is sent to the ECM through CAN communication line.
*3: ECM determines the start signal status by the signals of engine speed and battery voltage.

SYSTEM DESCRIPTION

The amount of fuel injected from the fuel injector is determined by the ECM. The ECM controls the length of time the valve remains open (injection pulse duration). The amount of fuel injected is a program value in the ECM memory. The program value is preset by engine operating conditions. These conditions are determined by input signals (for engine speed and intake air) from the crankshaft position sensor (POS), camshaft position sensor (PHASE) and the mass air flow sensor.

VARIOUS FUEL INJECTION INCREASE/DECREASE COMPENSATION

In addition, the amount of fuel injected is compensated to improve engine performance under various operating conditions as listed below.

<Fuel increase>

- During warm-up
- When starting the engine
- During acceleration
- Hot-engine operation
- When shift lever is changed from N to D (A/T models)
- High-load, high-speed operation

<Fuel decrease>

- During deceleration
- During high engine speed operation

MIXTURE RATIO FEEDBACK CONTROL (CLOSED LOOP CONTROL)

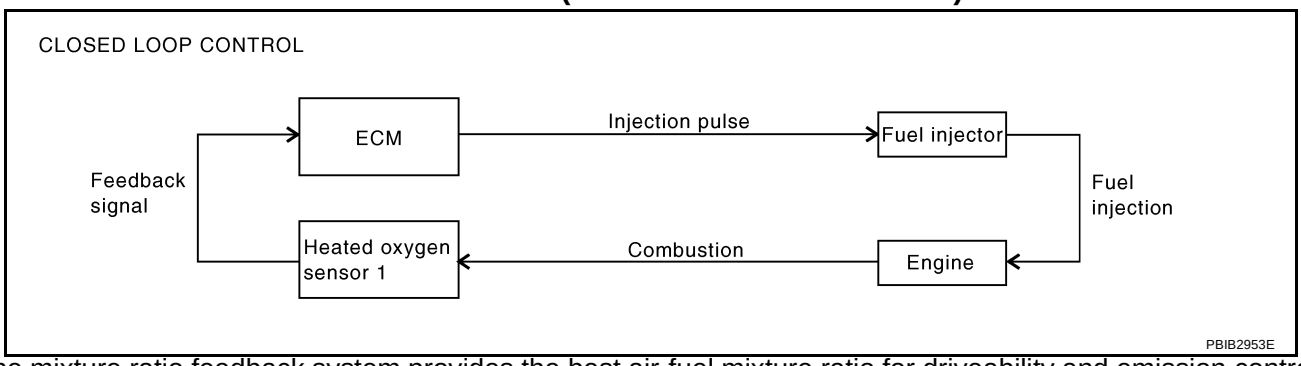

The mixture ratio feedback system provides the best air-fuel mixture ratio for driveability and emission control. The three way catalyst (manifold) can then better reduce CO, HC and NOx emissions. This system uses heated oxygen sensor 1 in the exhaust manifold to monitor whether the engine operation is rich or lean. The ECM adjusts the injection pulse width according to the sensor voltage signal. For more information about heated oxygen sensor 1, refer to EC-1373, "DTC P0132 HO2S1" . This maintains the mixture ratio within the range of stoichiometric (ideal air-fuel mixture).
This stage is referred to as the closed loop control condition.
Heated oxygen sensor 2 is located downstream of the three way catalyst (manifold). Even if the switching characteristics of heated oxygen sensor 1 shift, the air-fuel ratio is controlled to stoichiometric by the signal from heated oxygen sensor 2.

Open Loop Control

The open loop system condition refers to when the ECM detects any of the following conditions. Feedback control stops in order to maintain stabilized fuel combustion.

- Deceleration and acceleration
- High-load, high-speed operation
- Malfunction of heated oxygen sensor 1 or its circuit
- Insufficient activation of heated oxygen sensor 1 at low engine coolant temperature
- High engine coolant temperature
- During warm-up
- After shifting from N to D (A/T models)
- When starting the engine

MIXTURE RATIO SELF-LEARNING CONTROL

The mixture ratio feedback control system monitors the mixture ratio signal transmitted from heated oxygen sensor 1. This feedback signal is then sent to the ECM. The ECM controls the basic mixture ratio as close to the theoretical mixture ratio as possible. However, the basic mixture ratio is not necessarily controlled as originally designed. Both manufacturing differences (i.e., mass air flow sensor hot wire) and characteristic changes during operation (i.e., fuel injector clogging) directly affect mixture ratio.
Accordingly, the difference between the basic and theoretical mixture ratios is monitored in this system. This is then computed in terms of “injection pulse duration” to automatically compensate for the difference between the two ratios.
“Fuel trim” refers to the feedback compensation value compared against the basic injection duration. Fuel trim includes short term fuel trim and long term fuel trim.
“Short term fuel trim” is the short-term fuel compensation used to maintain the mixture ratio at its theoretical value. The signal from heated oxygen sensor 1 indicates whether the mixture ratio is RICH or LEAN compared to the theoretical value. The signal then triggers a reduction in fuel volume if the mixture ratio is rich, and an increase in fuel volume if it is lean.
“Long term fuel trim” is overall fuel compensation carried out long-term to compensate for continual deviation of the short term fuel trim from the central value. Such deviation will occur due to individual engine differences, wear over time and changes in the usage environment.

FUEL INJECTION TIMING

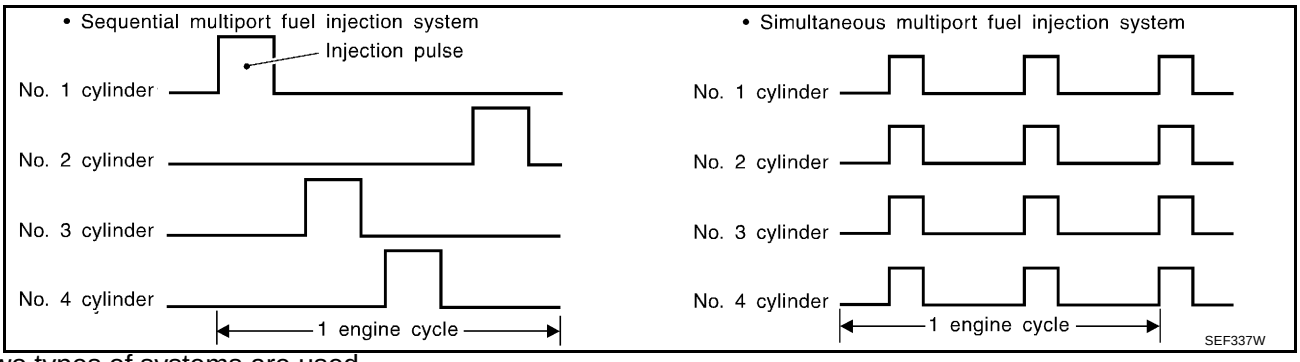

Two types of systems are used.

Sequential Multiport Fuel Injection System

Fuel is injected into each cylinder during each engine cycle according to the firing order. This system is used when the engine is running.

Simultaneous Multiport Fuel Injection System

Fuel is injected simultaneously into all four cylinders twice each engine cycle. In other words, pulse signals of the same width are simultaneously transmitted from the ECM.
The four fuel injectors will then receive the signals two times for each engine cycle.
This system is used when the engine is being started and/or if the fail-safe system (CPU) is operating.

FUEL SHUT-OFF

Fuel to each cylinder is cut off during deceleration, operation of the engine at excessively high speeds or operation of the vehicle at excessively high speeds.

Electronic Ignition (EI) System

BBS004KC

INPUT/OUTPUT SIGNAL CHART

Sensor	Input Signal to ECM	ECM function	Actuator
Crankshaft position sensor (POS)	Engine speed*2 Piston position	Ignition timing control	Power transistor
Camshaft position sensor (PHASE)			
Mass air flow sensor	Amount of intake air		
Engine coolant temperature sensor	Engine coolant temperature		
Throttle position sensor	Throttle position		
Accelerator pedal position sensor	Accelerator pedal position		
Battery	Battery voltage*2		
Knock sensor	Engine knocking		
Park/neutral position (PNP) switch	Gear position		
Wheel sensor	Vehicle speed*1		

*1: This signal is sent to the ECM through CAN communication line.
*2: ECM determines the start signal status by the signals of engine speed and battery voltage.

SYSTEM DESCRIPTION

Firing order: 1 - 3 - 4 - 2
The ignition timing is controlled by the ECM to maintain the best air-fuel ratio for every running condition of the engine. The ignition timing data is stored in the ECM.
The ECM receives information such as the injection pulse width and camshaft position sensor (PHASE) signal. Computing this information, ignition signals are transmitted to the power transistor.
During the following conditions, the ignition timing is revised by the ECM according to the other data stored in the ECM.

- At starting
- During warm-up
- At idle
- At low battery voltage

- During acceleration

The knock sensor retard system is designed only for emergencies. The basic ignition timing is programmed within the anti-knocking zone, if recommended fuel is used under dry conditions. The retard system does not operate under normal driving conditions. If engine knocking occurs, the knock sensor monitors the condition. The signal is transmitted to the ECM. The ECM retards the ignition timing to eliminate the knocking condition.

Fuel Cut Control (at No Load and High Engine Speed)

BBS004KD

INPUT/OUTPUT SIGNAL CHART

Sensor	Input Signal to ECM	ECM function	Actuator
Park/neutral position (PNP) switch	Neutral position	Fuel cut control	Fuel injector
Accelerator pedal position sensor	Accelerator pedal position		
Engine coolant temperature sensor	Engine coolant temperature		
Crankshaft position sensor (POS) Camshaft position sensor (PHASE)	Engine speed		
Wheel sensor	Vehicle speed*		

*: This signal is sent to the ECM through CAN communication line.

SYSTEM DESCRIPTION

If the engine speed is above 2,500 rpm under no load (for example, the shift lever position is neutral and engine speed is over 2,500 rpm) fuel will be cut off after some time. The exact time when the fuel is cut off varies based on engine speed.
Fuel cut will be operated until the engine speed reaches 2,000 rpm, then fuel cut will be cancelled.

NOTE:
This function is different from deceleration control listed under EC-1251, "Multiport Fuel Injection (MFI) System" .

AIR CONDITIONING CUT CONTROL

PFP:23710

Input/Output Signal Chart

BBS004KE

Sensor	Input Signal to ECM	ECM function	Actuator
Air conditioner switch	Air conditioner ON signal*1	Air conditioner cut control	Air conditioner relay
Accelerator pedal position sensor	Accelerator pedal position		
Crankshaft position sensor (POS) Camshaft position sensor (PHASE)	Engine speed*2		
Engine coolant temperature sensor	Engine coolant temperature		
Battery	Battery voltage*2		
Refrigerant pressure sensor	Refrigerant pressure		
EPS control unit	Power steering operation*1		
Wheel sensor	Vehicle speed*1		

*1: This signal is sent to the ECM through CAN communication line.
*2: ECM determines the start signal status by the signals of engine speed and battery voltage.

System Description

BBS004KF

This system improves engine operation when the air conditioner is used.
Under the following conditions, the air conditioner is turned OFF.

- When the accelerator pedal is fully depressed.
- When cranking the engine.
- At high engine speeds.
- When the engine coolant temperature becomes excessively high.
- When operating power steering during low engine speed or low vehicle speed.
- When engine speed is excessively low.
- When refrigerant pressure is excessively low or high.

CAN COMMUNICATION

PFP:23710

System Description

BBS004KG

CAN (Controller Area Network) is a serial communication line for real time application. It is an on-vehicle multiplex communication line with high data communication speed and excellent error detection ability. Many electronic control units are equipped onto a vehicle, and each control unit shares information and links with other control units during operation (not independent). In CAN communication, control units are connected with 2 communication lines (CAN H line, CAN L line) allowing a high rate of information transmission with less wiring. Each control unit transmits/receives data but selectively reads required data only.
Refer to LAN-21, "CAN COMMUNICATION" , about CAN communication for detail.

EVAPORATIVE EMISSION SYSTEM

PFP:14950

Description

BBS004KH

SYSTEM DESCRIPTION

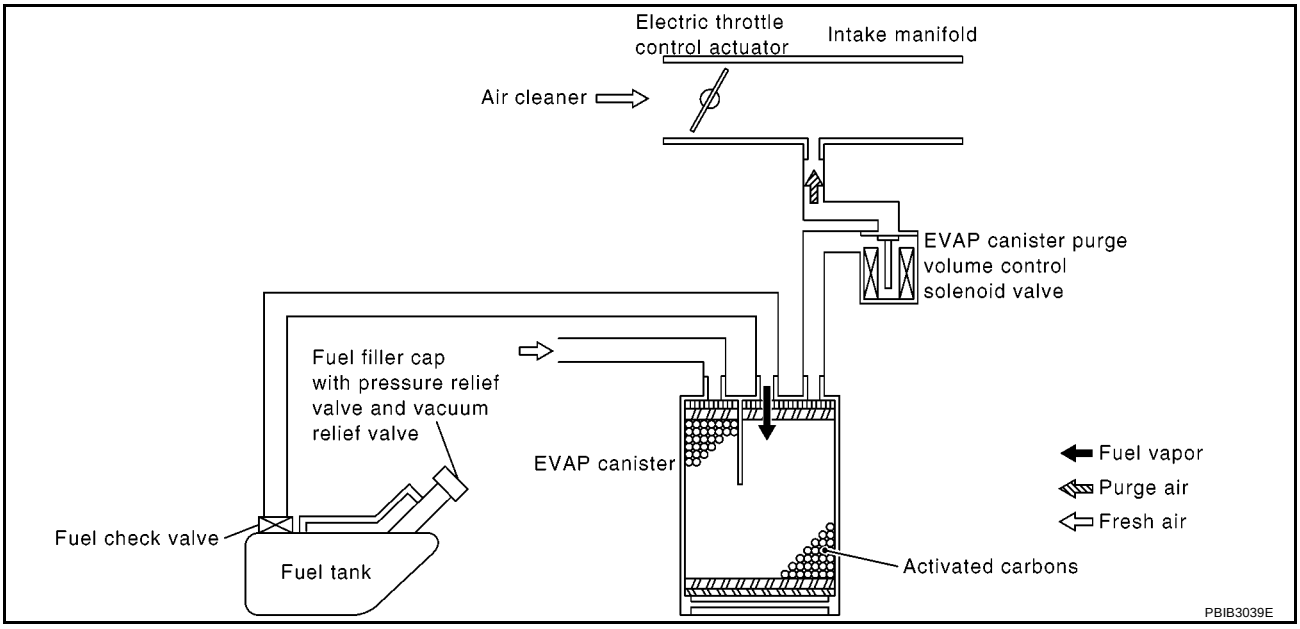

The evaporative emission system is used to reduce hydrocarbons emitted into the atmosphere from the fuel system. This reduction of hydrocarbons is accomplished by activated charcoals in the EVAP canister.
The fuel vapor in the sealed fuel tank is led into the EVAP canister which contains activated carbon and the vapor is stored there when the engine is not operating or when refueling to the fuel tank.
The vapor in the EVAP canister is purged by the air through the purge line to the intake manifold when the engine is operating. EVAP canister purge volume control solenoid valve is controlled by ECM. When the engine operates, the flow rate of vapor controlled by EVAP canister purge volume control solenoid valve is proportionally regulated as the air flow increases.
EVAP canister purge volume control solenoid valve also shuts off the vapor purge line during decelerating.

EVAPORATIVE EMISSION LINE DRAWING

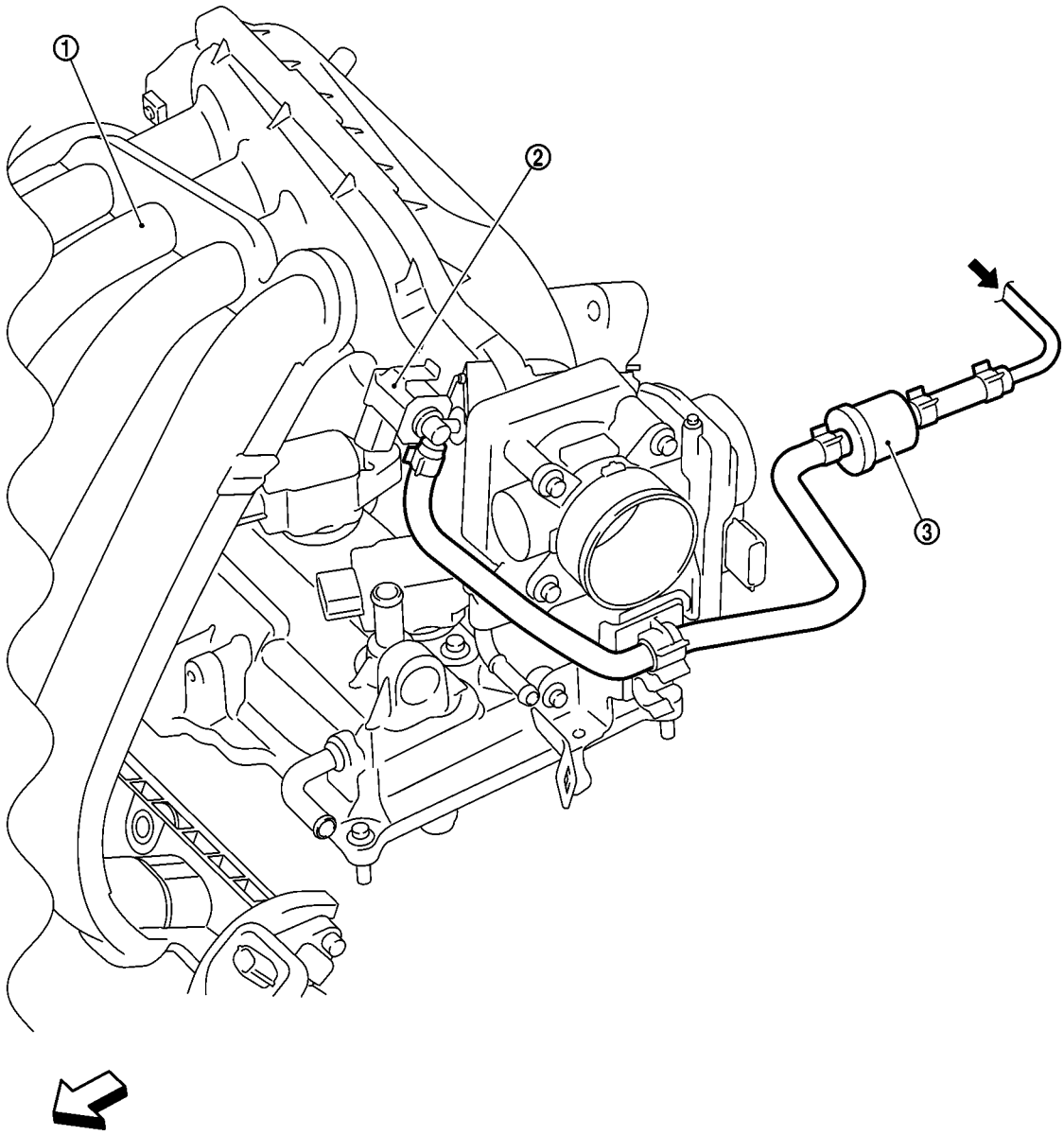

PBIB2946E

⇦ : Vehicle front

⬅ : From next page

1. Intake manifold
2. EVAP canister purge volume control solenoid valve
3. EVAP purge resonator

NOTE:
Do not use soapy water or any type of solvent while installing vacuum hose or purge hoses.

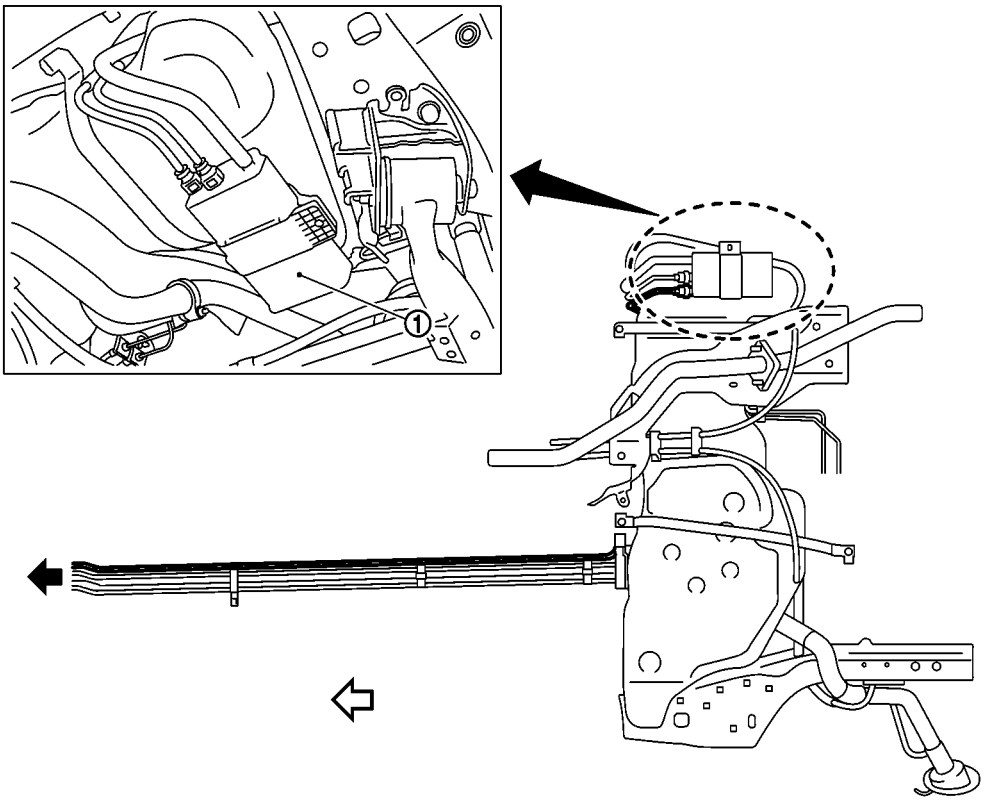

MBIB1450E

⇦ : Vehicle front

⬅ : To previous page

1. EVAP canister

Component Inspection

BBS004KI

EVAP CANISTER

Check EVAP canister as follows:

1. Block port (B).
2. Blow air into port (A) and check that it flows freely out of port (C).
3. Release blocked port (B).
4. Apply vacuum pressure to port (B) and check that vacuum pressure exists at the ports (A) and (C).
5. Block port (A) and (B).
6. Apply pressure to port (C) and check that there is no leakage.

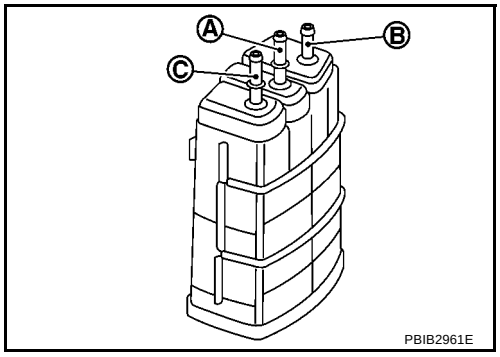

FUEL TANK VACUUM RELIEF VALVE (BUILT INTO FUEL FILLER CAP)

1. Wipe clean valve housing.

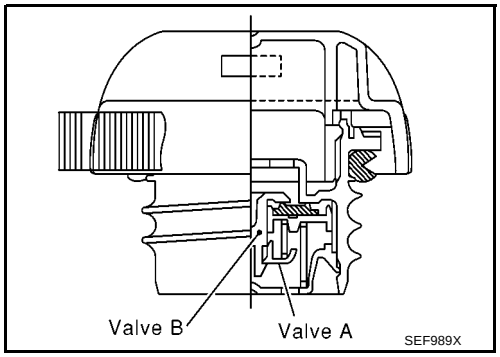

2. Check valve opening pressure and vacuum.

   Pressure: **15.3 - 20.0 kPa (0.153 - 0.200 bar, 0.156 - 0.204 kg/cm^2 , 2.22 - 2.90 psi)**

   Vacuum: **–6.0 to –3.3 kPa (–0.060 to –0.034 bar, –0.061 to –0.035 kg/cm^2 , –0.87 to –0.49 psi)**

3. If out of specification, replace fuel filler cap as an assembly.

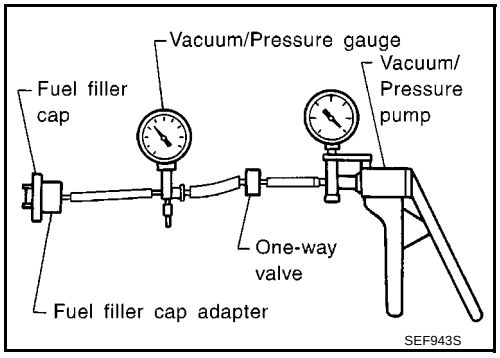

EVAP CANISTER PURGE VOLUME CONTROL SOLENOID VALVE

Refer to EC-1530, "EVAP CANISTER PURGE VOLUME CONTROL SOLENOID VALVE" .

NATS (NISSAN ANTI-THEFT SYSTEM)

PFP:25386

Description

BBS004KJ

- **If the security indicator lights up with the ignition switch in the ON position or "NATS MALFUNCTION" is displayed on "SELF-DIAG RESULTS" screen, perform self-diagnostic results mode with CONSULT-II using NATS program card. Refer to BL-215, "NATS (Nissan Anti-Theft System)" .**
- **Confirm no self-diagnostic results of NATS is displayed before touching "ERASE" in "SELF-DIAG RESULTS" mode with CONSULT-II.**
- **When replacing ECM, initialization of NATS system and registration of all NATS ignition key IDs must be carried out with CONSULT-II using NATS program card.**
  Therefore, be sure to receive all keys from vehicle owner.
  Regarding the procedures of NATS initialization and all NATS ignition key ID registration, refer to CONSULT-II operation manual, NATS.

SELF DIAG RESULTS	
DTC RESULTS	TIME
NATS MALFUNCTION [P1610]	0

SEF515Y

POSITIVE CRANKCASE VENTILATION

PFP:11810

Description

BBS004KK

SYSTEM DESCRIPTION

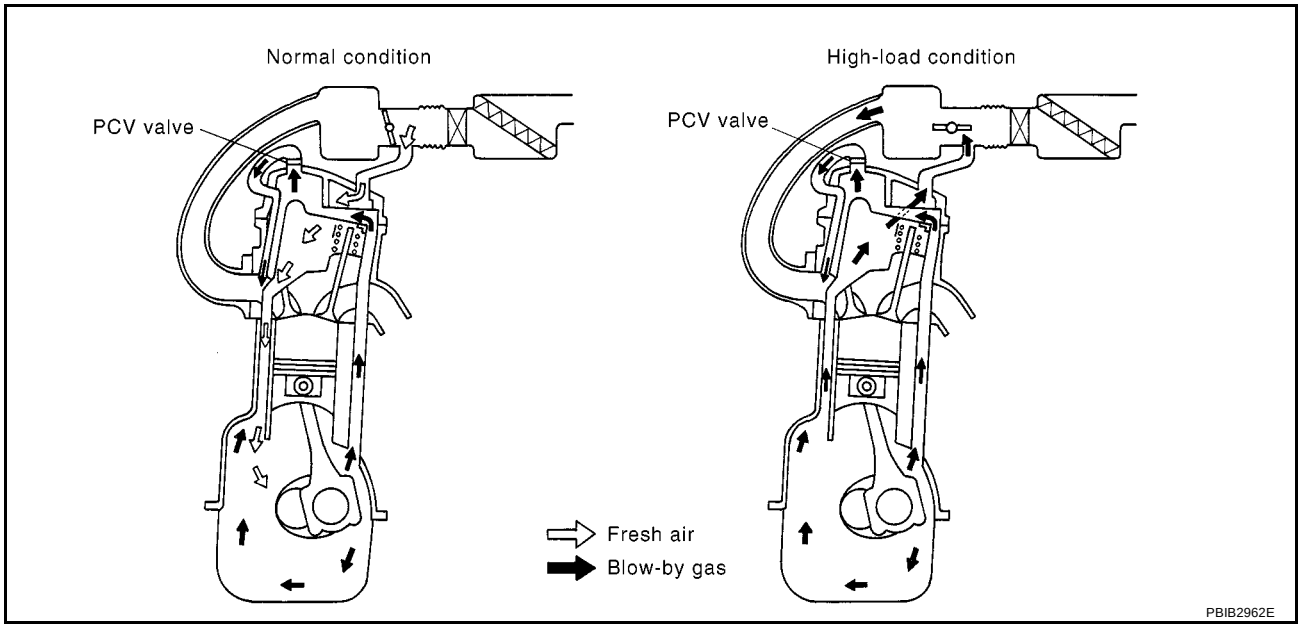

This system returns blow-by gas to the intake manifold.
The positive crankcase ventilation (PCV) valve is provided to conduct crankcase blow-by gas to the intake manifold.
During partial throttle operation of the engine, the intake manifold sucks the blow-by gas through the PCV valve.
Normally, the capacity of the valve is sufficient to handle any blow-by and a small amount of ventilating air.
The ventilating air is then drawn from the air inlet tubes into the crankcase. In this process the air passes through the hose connecting air inlet tubes to rocker cover.
Under full-throttle condition, the manifold vacuum is insufficient to draw the blow-by flow through the valve. The flow goes through the hose connection in the reverse direction.
On vehicles with an excessively high blow-by, the valve does not meet the requirement. This is because some of the flow will go through the hose connection to the air inlet tubes under all conditions.

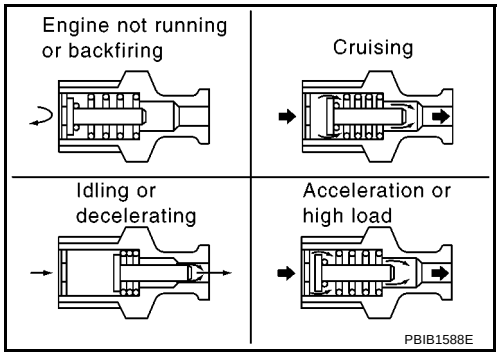

Component Inspection

BBS004KL

PCV (POSITIVE CRANKCASE VENTILATION) VALVE

With engine running at idle, remove PCV valve from rocker cover. A properly working valve makes a hissing noise as air passes through it. A strong vacuum should be felt immediately when a finger is placed over valve inlet.

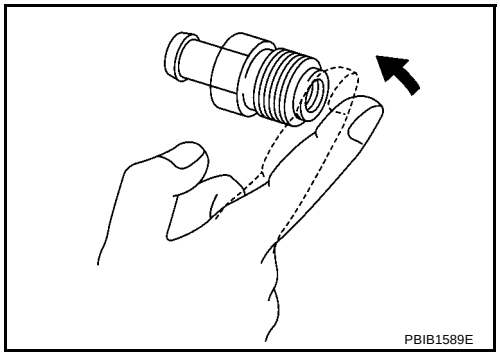

PCV VALVE VENTILATION HOSE

1. Check hoses and hose connections for leaks.
2. Disconnect all hoses and clean with compressed air. If any hose cannot be freed of obstructions, replace.

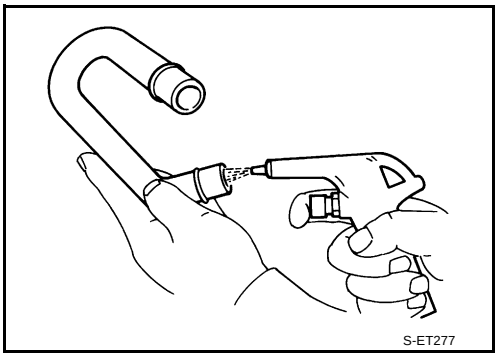

ON BOARD DIAGNOSTIC (OBD) SYSTEM

PFP:00028

Introduction

BBS004KM

The ECM has an on board diagnostic system, which detects malfunctions related to engine sensors or actuators. The ECM also records various emission-related diagnostic information including:

Emission-related diagnostic information
Diagnostic Trouble Code (DTC)
Freeze Frame data
1st Trip Diagnostic Trouble Code (1st Trip DTC)
1st Trip Freeze Frame data

The above information can be checked using procedures listed in the table below.

×: Applicable —: Not applicable

	DTC	1st trip DTC	Freeze Frame data	1st trip Freeze Frame data
CONSULT-II	×	×	×	×
ECM	×	×*	—	—

*: When DTC and 1st trip DTC simultaneously appear on the display, they cannot be clearly distinguished from each other.

The malfunction indicator (MI) on the instrument panel lights up when the same malfunction is detected in two consecutive trips (Two trip detection logic), or when the ECM enters fail-safe mode. (Refer to EC-1291, "Fail-Safe Chart" .)

Two Trip Detection Logic

BBS004KN

When a malfunction is detected for the first time, 1st trip DTC and 1st trip Freeze Frame data are stored in the ECM memory. The MI will not light up at this stage. <1st trip>
If the same malfunction is detected again during the next drive, the DTC and Freeze Frame data are stored in the ECM memory, and the MI lights up. The MI lights up at the same time when the DTC is stored. <2nd trip>
The “trip” in the “Two Trip Detection Logic” means a driving mode in which self-diagnosis is performed during vehicle operation.
When there is an open circuit on MI circuit, the ECM cannot warn the driver by lighting up MI when there is malfunction on engine control system.
Therefore, when electrical controlled throttle and part of ECM related diagnoses are continuously detected as NG for 5 trips, ECM warns the driver that engine control system malfunctions and MI circuit is open by means of operating fail-safe function.
The fail-safe function also operates when above diagnoses except MI circuit are detected and demands the driver to repair the malfunction.

Engine operating condition in fail-safe mode	Engine speed will not rise more than 2,500 rpm due to the fuel cut

Emission-related Diagnostic Information

BBS004KO

EMISSION-RELATED DIAGNOSTIC INFORMATION ITEMS

×:Applicable —: Not applicable

Items (CONSULT-II screen terms)	DTC*1		Trip	MI	Reference page
	CONSULT-II	ECM*2			
CAN COMM CIRCUIT	U1000	1000*3	2	—	EC-1344
CAN COMM CIRCUIT	U1001	1001*3	2	—	EC-1344
CONTROL UNIT(CAN)	U1010	1010	2	—	EC-1347
NO DTC IS DETECTED. FURTHER TESTING MAY BE REQUIRED.	**P0000**	**0000**	—	**Flashing***4	EC-1269
INT/V TIM CONT-B1	P0011	0011	2	—	EC-1349
MAF SEN/CIRCUIT	P0102	0102	1	×	EC-1354
MAF SEN/CIRCUIT	P0103	0103	1	×	EC-1354
ECT SEN/CIRC	P0117	0117	2	×	EC-1361

Items (CONSULT-II screen terms)	DTC*1		Trip	MI	Reference page
	CONSULT-II	ECM*2			
ECT SEN/CIRC	P0118	0118	2	×	EC-1361
TP SEN 2/CIRC	P0122	0122	1	×	EC-1367
TP SEN 2/CIRC	P0123	0123	1	×	EC-1367
HO2S1 (B1)	P0132	0132	2	×	EC-1373
HO2S1 (B1)	P0134	0134	2	×	EC-1381
HO2S2 (B1)	P0138	0138	2	×	EC-1388
TP SEN 1/CIRC	P0222	0222	1	×	EC-1395
TP SEN 1/CIRC	P0223	0223	1	×	EC-1395
KNOCK SEN/CIRC-B1	P0327	0327	2	—	EC-1401
KNOCK SEN/CIRC-B1	P0328	0328	2	—	EC-1401
CKP SEN/CIRCUIT	P0335	0335	2	×	EC-1405
CMP SEN/CIRC-B1	P0340	0340	2	×	EC-1413
ECM	P0605	0605	1 or 2	× or —	EC-1420
ECM BACK UP/CIRCUIT*5	P1065	1065	2	×	EC-1423
INT/V TIM V/CIR-B1	P1111	1111	2	×	EC-1425
ETC ACTR	P1121	1121	1	×	EC-1430
ETC FUNCTION/CIRC	P1122	1122	1	×	EC-1433
ETC MOT PWR	P1124	1124	1	×	EC-1439
ETC MOT PWR	P1126	1126	1	×	EC-1439
ETC MOT	P1128	1128	1	×	EC-1445
TCS/CIRC	P1212	1212	2	—	EC-1450
ENG OVER TEMP	P1217	1217	1	×	EC-1451
CTP LEARNING	P1225	1225	2	—	EC-1467
CTP LEARNING	P1226	1226	2	—	EC-1469
SENSOR POWER/CIRC	P1229	1229	1	×	EC-1471
NATS MALFUNCTION	P1610 - P1615	1610 - 1615	2	—	BL-215
P-N POS SW/CIRCUIT	P1706	1706	2	×	EC-1479
BRAKE SW/CIRCUIT	P1805	1805	1	×	EC-1487
APP SEN 1/CIRC	P2122	2122	1	×	EC-1492
APP SEN 1/CIRC	P2123	2123	1	×	EC-1492
APP SEN 2/CIRC	P2127	2127	1	×	EC-1501
APP SEN 2/CIRC	P2128	2128	1	×	EC-1501
TP SENSOR	P2135	2135	1	×	EC-1511
APP SENSOR	P2138	2138	1	×	EC-1517

*1: 1st trip DTC No. is the same as DTC No.
*2: In Diagnostic Test Mode II (Self-diagnostic results), this number is controlled by NISSAN.
*3: The troubleshooting for this DTC needs CONSULT-II.
*4: When engine is running, MI may flash. For details, refer to EC-1269, "MI Flashing Without DTC" .
*5: This self-diagnosis is not for ECM power supply circuit, even though “ECM BACK UP/CIRCUIT” is displayed on CONSULT-II screen.

DTC AND 1ST TRIP DTC

The 1st trip DTC (whose number is the same as the DTC number) is displayed for the latest self-diagnostic result obtained. If the ECM memory was cleared previously, and the 1st trip DTC did not reoccur, the 1st trip DTC will not be displayed.
If a malfunction is detected during the 1st trip, the 1st trip DTC is stored in the ECM memory. The MI will not light up (two trip detection logic). If the same malfunction is not detected in the 2nd trip (meeting the required

driving pattern), the 1st trip DTC is cleared from the ECM memory. If the same malfunction is detected in the 2nd trip, both the 1st trip DTC and DTC are stored in the ECM memory and the MI lights up. In other words, the DTC is stored in the ECM memory and the MI lights up when the same malfunction occurs in two consecutive trips. If a 1st trip DTC is stored and a non-diagnostic operation is performed between the 1st and 2nd trips, only the 1st trip DTC will continue to be stored. For malfunctions that blink or light up the MI during the 1st trip, the DTC and 1st trip DTC are stored in the ECM memory.
Procedures for clearing the DTC and the 1st trip DTC from the ECM memory are described in EC-1267, "HOW TO ERASE EMISSION-RELATED DIAGNOSTIC INFORMATION" .
When a 1st trip DTC is detected, check, print out or write down and erase (1st trip) DTC and Freeze Frame data as specified in Work Flow procedure Step 2, refer to EC-1285, "WORK FLOW" . Then perform DTC Confirmation Procedure or Overall Function Check to try to duplicate the malfunction. If the malfunction is duplicated, the item requires repair.

How to Read DTC and 1st Trip DTC

DTC and 1st trip DTC can be read by the following methods.

With CONSULT-II

CONSULT-II displays the DTC in “SELF-DIAG RESULTS” mode. Examples: P0117, P0340, P1217, etc.
(CONSULT-II also displays the malfunctioning component or system.)

Without CONSULT-II

The number of blinks of the MI in the Diagnostic Test Mode II (Self-Diagnostic Results) indicates the DTC. Example: 0117, 0340, 1217, etc.

- **1st trip DTC No. is the same as DTC No.**
- **Output of a DTC indicates a malfunction. However, the Diagnostic Test Mode II do not indicate whether the malfunction is still occurring or has occurred in the past and has returned to normal. CONSULT-II can identify malfunction status as shown below. Therefore, using CONSULT-II (if available) is recommended.**

A sample of CONSULT-II display for DTC and 1st trip DTC is shown below. DTC or 1st trip DTC of a malfunction is displayed in SELF-DIAGNOSTIC RESULTS mode of CONSULT-II. Time data indicates how many times the vehicle was driven after the last detection of a DTC.
If the DTC is being detected currently, the time data will be [0].
If a 1st trip DTC is stored in the ECM, the time data will be [1t].

DTC display

SELF DIAG RESULTS	
DTC RESULTS	TIME
CKP SEN/CIRCUIT [P0335]	0

1st trip DTC display

SELF DIAG RESULTS	
DTC RESULTS	TIME
CKP SEN/CIRCUIT [P0335]	1t

PBIB0911E

FREEZE FRAME DATA AND 1ST TRIP FREEZE FRAME DATA

The ECM records the driving conditions such as fuel system status, calculated load value, engine coolant temperature, short term fuel trim, long term fuel trim, engine speed, vehicle speed, base fuel schedule and intake air temperature at the moment a malfunction is detected.
Data which are stored in the ECM memory, along with the 1st trip DTC, are called 1st trip freeze frame data. The data, stored together with the DTC data, are called freeze frame data and displayed on CONSULT-II. For details, see EC-1314, "Freeze Frame Data and 1st Trip Freeze Frame Data" .
Only one set of freeze frame data (either 1st trip freeze frame data or freeze frame data) can be stored in the ECM. 1st trip freeze frame data is stored in the ECM memory along with the 1st trip DTC. There is no priority for 1st trip freeze frame data and it is updated each time a different 1st trip DTC is detected. However, once freeze frame data (2nd trip detection/MI on) is stored in the ECM memory, 1st trip freeze frame data is no longer stored. Remember, only one set of freeze frame data can be stored in the ECM.
Both 1st trip freeze frame data and freeze frame data (along with the DTCs) are cleared when the ECM memory is erased. Procedures for clearing the ECM memory are described in EC-1267, "HOW TO ERASE EMISSION-RELATED DIAGNOSTIC INFORMATION" .

HOW TO ERASE EMISSION-RELATED DIAGNOSTIC INFORMATION

How to Erase DTC

WITH CONSULT-II

The emission related diagnostic information in the ECM can be erased by selecting “ERASE” in the “SELF-DIAG RESULTS” mode with CONSULT-II.

1. If the ignition switch stays ON after repair work, be sure to turn ignition switch OFF once. Wait at least 10 seconds and then turn it ON (engine stopped) again.
2. Touch “ENGINE”.
3. Touch “SELF-DIAG RESULTS”.
4. Touch “ERASE”. (The DTC in the ECM will be erased.)

How to erase DTC (With CONSULT-II)

1. If the ignition switch stays “ON” after repair work, be sure to turn ignition switch “OFF” once. Wait at least 10 seconds and then turn it “ON” again.

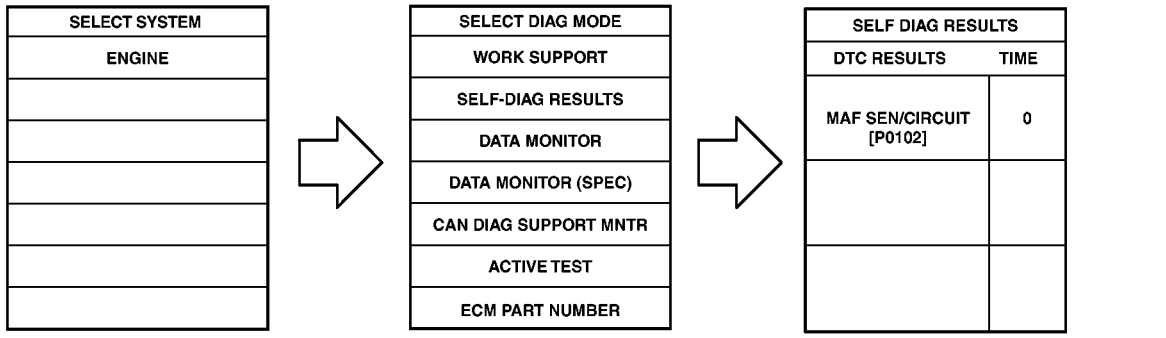

2. Turn **CONSULT-II** “ON” and touch “ENGINE”.
3. Touch “SELF-DIAG RESULTS”.
4. Touch “ERASE”. (The DTC in the ECM will be erased.)

PBIB2454E

Without CONSULT-II

1. If the ignition switch stays ON after repair work, be sure to turn ignition switch OFF once.
2. Wait at least 10 seconds and then turn it ON (engine stopped) again.
3. Change the diagnostic test mode from Mode II to Mode I by depressing the accelerator pedal. Refer to EC-1269, "HOW TO SWITCH DIAGNOSTIC TEST MODE" .

- **If the battery is disconnected, the emission-related diagnostic information will be lost within 24 hours.**
- **The following data are cleared when the ECM memory is erased.**

– Diagnostic trouble codes
– 1st trip diagnostic trouble codes
– Freeze frame data
– 1st trip freeze frame data

Actual work procedures are explained using a DTC as an example. Be careful so that not only the DTC, but all of the data listed above, are cleared from the ECM memory during work procedures.

Malfunction Indicator (MI)

BBS004KP

DESCRIPTION

The MI is located on the instrument panel.

1. The MI will light up when the ignition switch is turned ON without the engine running. This is a bulb check.
   If the MI does not light up, refer to DI-32, "WARNING LAMPS" , or see EC-1596, "MI & DATA LINK CONNECTORS" .
2. When the engine is started, the MI should go off.
   If the MI remains on, the on board diagnostic system has detected an engine system malfunction.

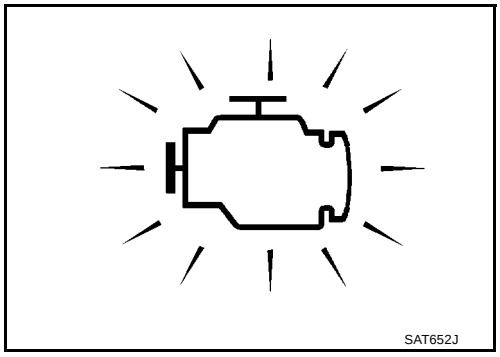

ON BOARD DIAGNOSTIC SYSTEM FUNCTION

The on board diagnostic system has the following four functions.

Diagnostic Test Mode	KEY and ENG. Status	Function	Explanation of Function
Mode I	Ignition switch in ON position Engine stopped	BULB CHECK	This function checks the MI bulb for damage (blown, open circuit, etc.). If the MI does not come on, check MI circuit.
	Engine running	MALFUNCTION WARNING	This is a usual driving condition. When a malfunction is detected twice in two consecutive driving cycles (two trip detection logic), the MI will light up to inform the driver that a malfunction has been detected. One trip detection diagnoses will light up the MI in the 1st trip.
Mode II	Ignition switch in ON position Engine stopped	SELF-DIAGNOSTIC RESULTS	This function allows DTCs and 1st trip DTCs to be read.
	Engine running	HEATED OXYGEN SENSOR 1 MONITOR	This function allows the fuel mixture condition (lean or rich), monitored by heated oxygen sensor 1, to be read.

When there is an open circuit on MI circuit, the ECM cannot warn the driver by lighting up MI when there is malfunction on engine control system.
Therefore, when electrical controlled throttle and part of ECM related diagnoses are continuously detected as NG for 5 trips, ECM warns the driver that engine control system malfunctions and MI circuit is open by means of operating fail-safe function.
The fail-safe function also operates when above diagnoses except MI circuit are detected and demands the driver to repair the malfunction.

Engine operating condition in fail-safe mode	Engine speed will not rise more than 2,500 rpm due to the fuel cut

MI Flashing Without DTC

If the ECM is in Diagnostic Test Mode II, MI may flash when engine is running. In this case, check ECM diagnostic test mode. Refer to EC-1269, "HOW TO SWITCH DIAGNOSTIC TEST MODE" .
How to switch the diagnostic test (function) modes, and details of the above functions are described later. Refer to EC-1269, "HOW TO SWITCH DIAGNOSTIC TEST MODE" .
The following emission-related diagnostic information is cleared when the ECM memory is erased.

- Diagnostic trouble codes
- 1st trip diagnostic trouble codes
- Freeze frame data
- 1st trip freeze frame data

HOW TO SWITCH DIAGNOSTIC TEST MODE

NOTE:

- **It is better to count the time accurately with a clock.**
- **It is impossible to switch the diagnostic mode when an accelerator pedal position sensor circuit has a malfunction.**
- **Always ECM returns to Diagnostic Test Mode I after ignition switch is turned OFF.**

How to Set Diagnostic Test Mode II (Self-diagnostic Results)

1. Confirm that accelerator pedal is fully released, turn ignition switch ON and wait 3 seconds.
2. Repeat the following procedure quickly five times within 5 seconds.

a. Fully depress the accelerator pedal.
b. Fully release the accelerator pedal.

3. Wait 7 seconds, fully depress the accelerator pedal and keep it for approx. 10 seconds until the MI starts blinking.
4. Fully release the accelerator pedal.
   ECM has entered to Diagnostic Test Mode II (Self-diagnostic results).

   NOTE:
   Wait until the same DTC (or 1st trip DTC) appears to confirm all DTCs certainly.

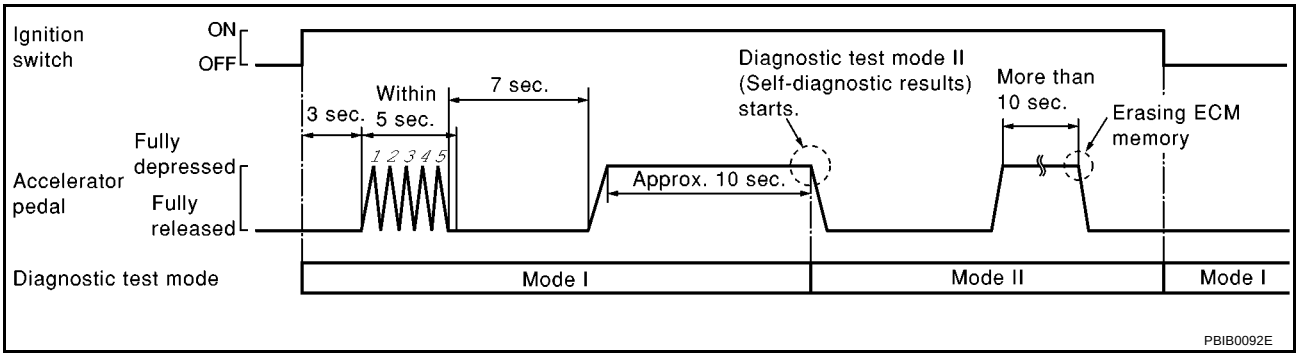

How to Set Diagnostic Test Mode II (Heated Oxygen Sensor 1 Monitor)

1. Set the ECM in Diagnostic Test Mode II (Self-diagnostic results).
   Refer to EC-1269, "How to Set Diagnostic Test Mode II (Self-diagnostic Results)" .
2. Start Engine.
   ECM has entered to Diagnostic Test Mode II (Heated oxygen sensor 1 monitor).

How to Erase Diagnostic Test Mode II (Self-diagnostic Results)

1. Set ECM in Diagnostic Test Mode II (Self-diagnostic results). Refer to EC-1269, "How to Set Diagnostic Test Mode II (Self-diagnostic Results)" .
2. Fully depress the accelerator pedal and keep it for more than 10 seconds.
   The emission-related diagnostic information has been erased from the backup memory in the ECM.
3. Fully release the accelerator pedal, and confirm the DTC 0000 is displayed.

DIAGNOSTIC TEST MODE I — BULB CHECK

In this mode, the MI on the instrument panel should stay ON. If it remains OFF, check the bulb. Refer to DI-32, "WARNING LAMPS" or see EC-1596, "MI & DATA LINK CONNECTORS" .

DIAGNOSTIC TEST MODE I — MALFUNCTION WARNING

MI	Condition
ON	When the malfunction is detected.
OFF	No malfunction.

This DTC number is clarified in Diagnostic Test Mode II (SELF-DIAGNOSTIC RESULTS)

DIAGNOSTIC TEST MODE II — SELF-DIAGNOSTIC RESULTS

In this mode, the DTC and 1st trip DTC are indicated by the number of blinks of the MI as shown below.
The DTC and 1st trip DTC are displayed at the same time. If the MI does not illuminate in diagnostic test mode I (Malfunction warning), all displayed items are 1st trip DTCs. If only one code is displayed when the MI illuminates in diagnostic test mode II (SELF-DIAGNOSTIC RESULTS), it is a DTC; if two or more codes are displayed, they may be either DTCs or 1st trip DTCs. DTC No. is same as that of 1st trip DTC. These unidentified codes can be identified by using CONSULT-II. A DTC will be used as an example for how to read a code.

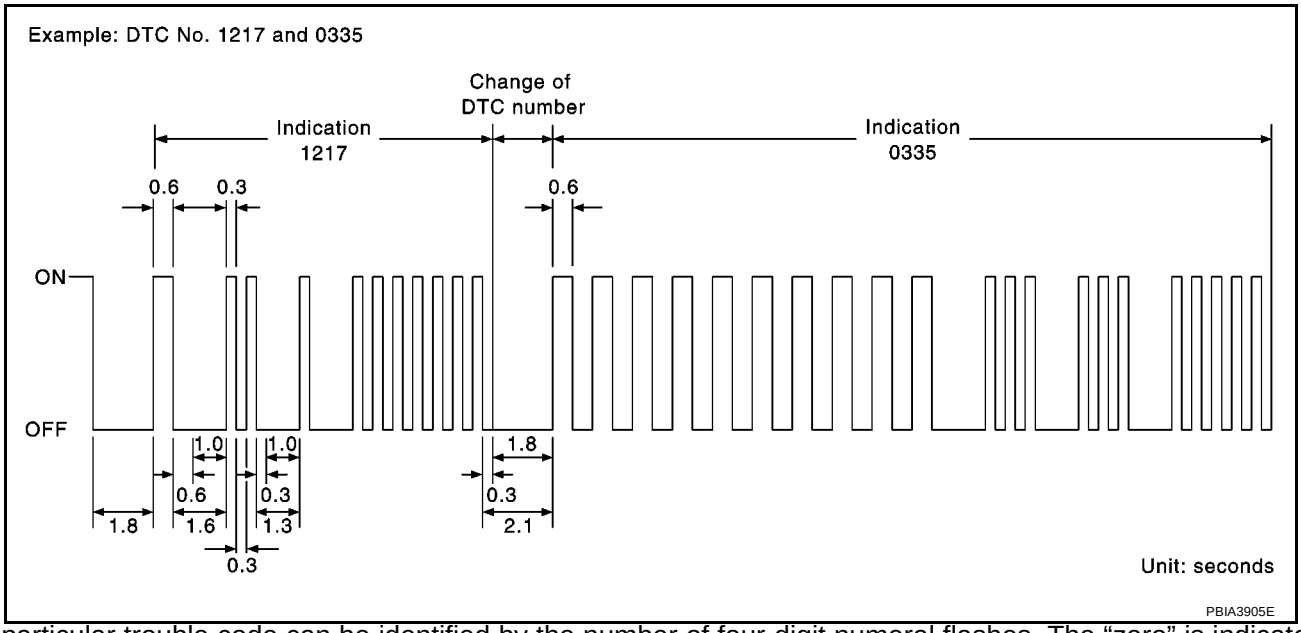

A particular trouble code can be identified by the number of four-digit numeral flashes. The “zero” is indicated by the number of ten flashes. The length of time the 1,000th-digit numeral flashes on and off is 1.2 seconds consisting of an ON (0.6-second) - OFF (0.6-second) cycle.
The 100th-digit numeral and lower digit numerals consist of a 0.3-second ON and 0.3-second OFF cycle.
A change from one digit numeral to another occurs at an interval of 1.0-second OFF. In other words, the later numeral appears on the display 1.3 seconds after the former numeral has disappeared.
A change from one trouble code to another occurs at an interval of 1.8-second OFF.
In this way, all the detected malfunctions are classified by their DTC numbers. The DTC 0000 refers to no malfunction. (See EC-1239, "INDEX FOR DTC")

How to Erase Diagnostic Test Mode II (Self-diagnostic Results)

The DTC can be erased from the back up memory in the ECM by depressing accelerator pedal. Refer to EC-1269, "How to Erase Diagnostic Test Mode II (Self-diagnostic Results)" .

- **If the battery is disconnected, the DTC will be lost from the backup memory within 24 hours.**
- **Be careful not to erase the stored memory before starting trouble diagnoses.**

DIAGNOSTIC TEST MODE II — HEATED OXYGEN SENSOR 1 MONITOR

In this mode, the MI displays the condition of the fuel mixture (lean or rich) which is monitored by the heated oxygen sensor 1.

MI	Fuel mixture condition in the exhaust gas	Air fuel ratio feedback control condition
ON	Lean	Closed loop system
OFF	Rich	
*Remains ON or OFF	Any condition	Open loop system

*: Maintains conditions just before switching to open loop.

To check the heated oxygen sensor 1 function, start engine in the Diagnostic Test Mode II and warm it up until engine coolant temperature indicator points to the middle of the gauge.
Next run engine at about 2,000 rpm for about 2 minutes under no load conditions. Then make sure that the MI comes ON more than 5 times within 10 seconds with engine running at 2,000 rpm under no load.

BASIC SERVICE PROCEDURE

PFP:00018

Basic Inspection

BBS004KQ

1. INSPECTION START

1. Check service records for any recent repairs that may indicate a related malfunction, or a current need for scheduled maintenance.
2. Open engine hood and check the following:
   - Harness connectors for improper connections
   - Wiring harness for improper connections, pinches and cut
   - Vacuum hoses for splits, kinks and improper connections
   - Hoses and ducts for leaks
   - Air cleaner clogging
   - Gasket
3. Confirm that electrical or mechanical loads are not applied.
   - Headlamp switch is OFF.
   - Air conditioner switch is OFF.
   - Rear window defogger switch is OFF.
   - Steering wheel is in the straight-ahead position, etc.
4. Start engine and warm it up until engine coolant temperature indicator points the middle of gauge.
   Ensure engine stays below 1,000 rpm.

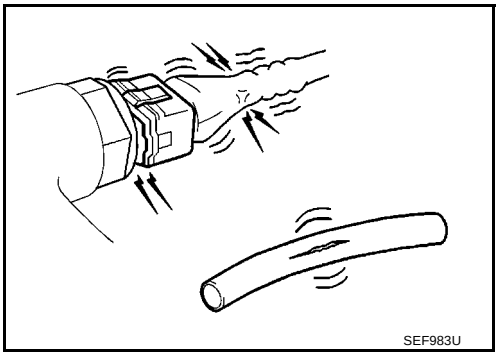

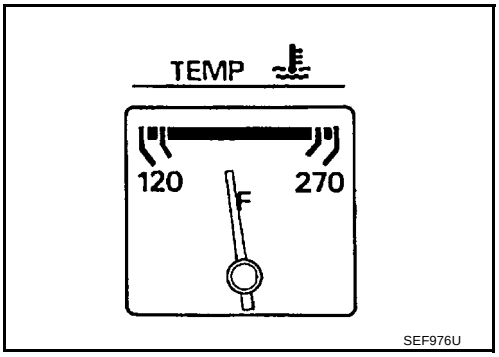

5. Run engine at about 2,000 rpm for about 2 minutes under no load.
6. Make sure that no DTC is displayed with CONSULT-II.

OK or NG

OK >> GO TO 3.
NG >> GO TO 2.

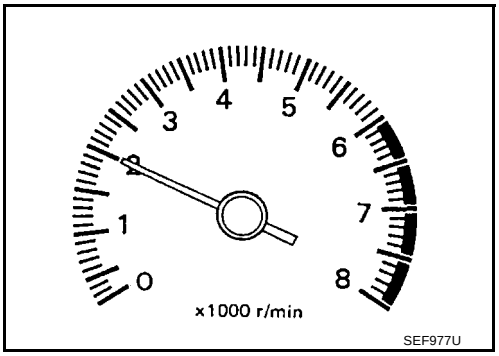

2. REPAIR OR REPLACE

Repair or replace components as necessary according to corresponding Diagnostic Procedure.

>> GO TO 3

3. CHECK TARGET IDLE SPEED

With CONSULT-II

1. Run engine at about 2,000 rpm for about 2 minutes under no load.
2. Rev engine (2,000 to 3,000 rpm) two or three times under no load, then run engine at idle speed for about 1 minute.

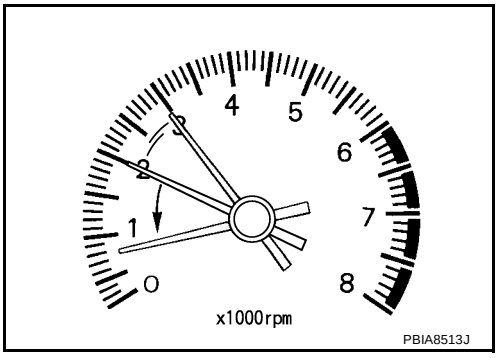

3. Read idle speed in “DATA MONITOR” mode with CONSULT-II. Refer to EC-1277, "IDLE SPEED" .

   A/T: 700 ± 50 rpm (in P or N position)

   M/T: 650 ± 50 rpm (in Neutral position)

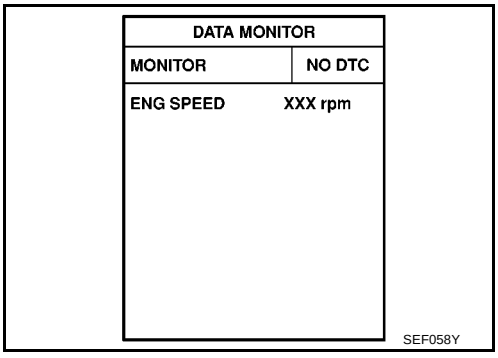

Without CONSULT-II

1. Run engine at about 2,000 rpm for about 2 minutes under no load.
2. Rev engine (2,000 to 3,000 rpm) two or three times under no load, then run engine at idle speed for about 1 minute.
3. Check idle speed.
   Refer to EC-1277, "IDLE SPEED" .

   A/T: 700 ± 50 rpm (in P or N position)

   M/T: 650 ± 50 rpm (in Neutral position)

OK or NG

OK >> GO TO 10.
NG >> GO TO 4.

4. PERFORM ACCELERATOR PEDAL RELEASED POSITION LEARNING

1. Stop engine.
2. Perform EC-1278, "Accelerator Pedal Released Position Learning" .

>> GO TO 5.

5. PERFORM THROTTLE VALVE CLOSED POSITION LEARNING

Perform EC-1279, "Throttle Valve Closed Position Learning" .

>> GO TO 6.

6. PERFORM IDLE AIR VOLUME LEARNING

Refer to EC-1279, "Idle Air Volume Learning" .

Is Idle Air Volume Learning carried out successfully?

Yes or No

Yes >> GO TO 7.
No >> 1. Follow the instruction of Idle Air Volume Learning.
2. GO TO 4.

7. CHECK TARGET IDLE SPEED AGAIN

With CONSULT-II

1. Start engine and warm it up to normal operating temperature.
2. Read idle speed in “DATA MONITOR” mode with CONSULT-II. Refer to EC-1277, "IDLE SPEED" .

A/T: 700 ± 50 rpm (in P or N position)
M/T: 650 ± 50 rpm (in Neutral position)

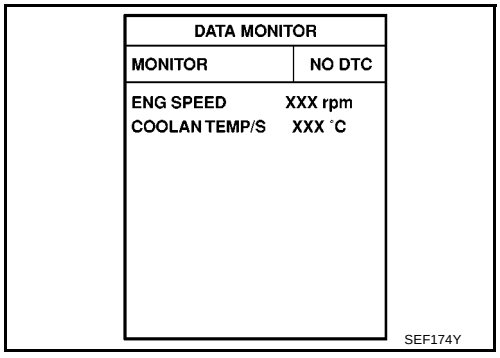

Without CONSULT-II

1. Start engine and warm it up to normal operating temperature.
2. Check idle speed. Refer to EC-1277, "IDLE SPEED" .

A/T: 700 ± 50 rpm (in P or N position)
M/T: 650 ± 50 rpm (in Neutral position)

OK or NG

OK >> GO TO 10.
NG >> GO TO 8.

8. DETECT MALFUNCTIONING PART

Check the Following.

- Check camshaft position sensor (PHASE) and circuit. Refer to EC-1413, "DTC P0340 CMP SENSOR (PHASE)" .
- Check crankshaft position sensor (POS) and circuit. Refer to EC-1405, "DTC P0335 CKP SENSOR (POS)" .

OK or NG

OK >> GO TO 9.
NG >> 1. Repair or replace.
2. GO TO 4.

9. CHECK ECM FUNCTION

1. Substitute another known-good ECM to check ECM function. (ECM may be the cause of an incident, but this is a rare case.)
2. Perform initialization of NATS system and registration of all NATS ignition key IDs. Refer to BL-218, "ECM Re-communicating Function" .

>> GO TO 4.

10. CHECK IGNITION TIMING

1. Run engine at idle.
2. Check ignition timing with a timing light.
   Refer to EC-1277, "IGNITION TIMING" .

– Timing indicator (1)

A/T: 6 ± 5° BTDC (in P or N position)
M/T: 6 ± 5° BTDC (in Neutral position)

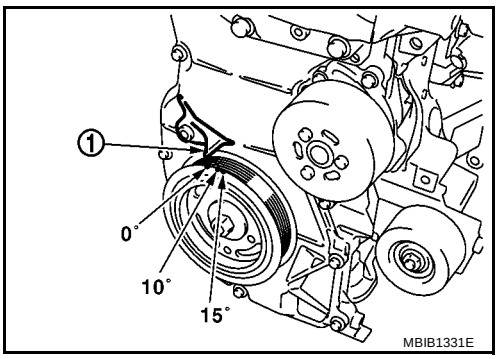

OK or NG

OK >> **INSPECTION END**
NG >> GO TO 11.

11. PERFORM ACCELERATOR PEDAL RELEASED POSITION LEARNING

1. Stop engine.
2. Perform EC-1278, "Accelerator Pedal Released Position Learning" .

>> GO TO 12.

12. PERFORM THROTTLE VALVE CLOSED POSITION LEARNING

Perform EC-1279, "Throttle Valve Closed Position Learning" .

>> GO TO 13.

13. PERFORM IDLE AIR VOLUME LEARNING

Refer to EC-1279, "Idle Air Volume Learning" .
Is Idle Air Volume Learning carried out successfully?

Yes or No

Yes >> GO TO 14.
No >> 1. Follow the instruction of Idle Air Volume Learning.
2. GO TO 4.

14. CHECK TARGET IDLE SPEED AGAIN

With CONSULT-II

1. Start engine and warm it up to normal operating temperature.
2. Read idle speed in “DATA MONITOR” mode with CONSULT-II.
   Refer to EC-1277, "IDLE SPEED" .

A/T: 700 ± 50 rpm (in P or N position)
M/T: 650 ± 50 rpm (in Neutral position)

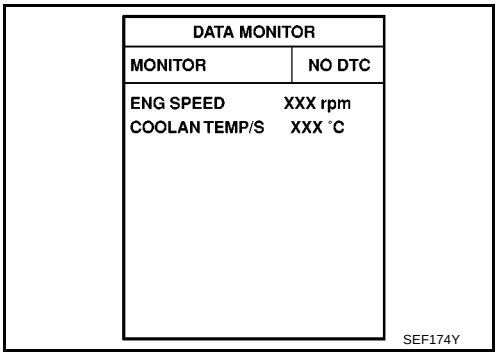

Without CONSULT-II

1. Start engine and warm it up to normal operating temperature.
2. Check idle speed.
   Refer to EC-1277, "IDLE SPEED" .

A/T: 700 ± 50 rpm (in P or N position)
M/T: 650 ± 50 rpm (in Neutral position)

OK or NG

OK >> GO TO 15.
NG >> GO TO 17.

15. CHECK IGNITION TIMING AGAIN

1. Run engine at idle.
2. Check ignition timing with a timing light.
   Refer to EC-1277, "IGNITION TIMING" .

– Timing indicator (1)

A/T: 6 ± 5° BTDC (in P or N position)

M/T: 6 ± 5° BTDC (in Neutral position)

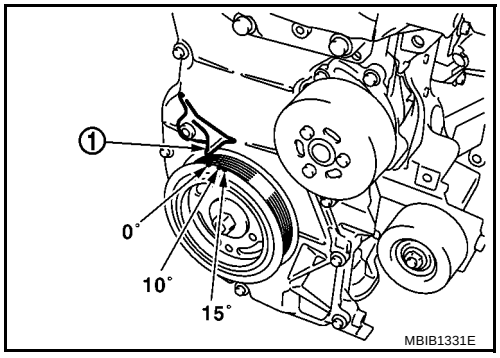

OK or NG

OK >> **INSPECTION END**
NG >> GO TO 16.

16. CHECK TIMING CHAIN INSTALLATION

Check timing chain installation. Refer to EM-142, "TIMING CHAIN" .

OK or NG

OK >> GO TO 17.
NG >> 1. Repair the timing chain installation.
2. GO TO 4.

17. DETECT MALFUNCTIONING PART

Check the following.

- Check camshaft position sensor (PHASE) and circuit. Refer to EC-1413, "DTC P0340 CMP SENSOR (PHASE)" .
- Check crankshaft position sensor (POS) and circuit. Refer to EC-1405, "DTC P0335 CKP SENSOR (POS)" .

OK or NG

OK >> GO TO 18.
NG >> 1. Repair or replace.
2. GO TO 4.

18. CHECK ECM FUNCTION

1. Substitute another known-good ECM to check ECM function. (ECM may be the cause of an incident, but this is a rare case.)
2. Perform initialization of NATS system and registration of all NATS ignition key IDs. Refer to BL-218, "ECM Re-communicating Function" .

>> GO TO 4.

Idle Speed and Ignition Timing Check

BBS004KR

IDLE SPEED

With CONSULT-II

Check idle speed in “DATA MONITOR” mode with CONSULT-II.

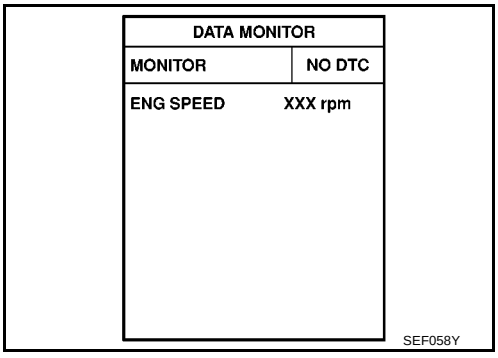

Without CONSULT-II

Check the idle speed by installing the pulse type tachometer clamp on the loop wire or on suitable high-tension wire which installed between ignition coil No.4 and spark plug No.4.

NOTE:
For the method of installing the tachometer, refer to EC-1277, "IGNITION TIMING" .

IGNITION TIMING

Any of following two methods may be used.

Method A

1. Attach timing light A to loop wire (1) as shown.
   - ⇦: Vehicle front

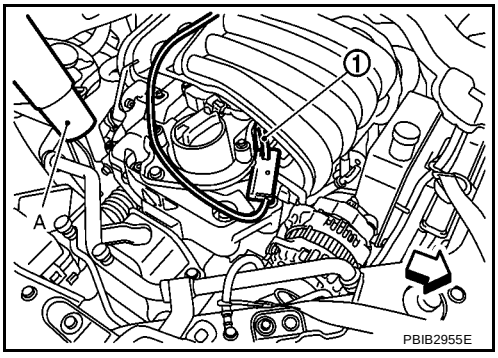

2. Check ignition timing.
   - Timing indicator (1)

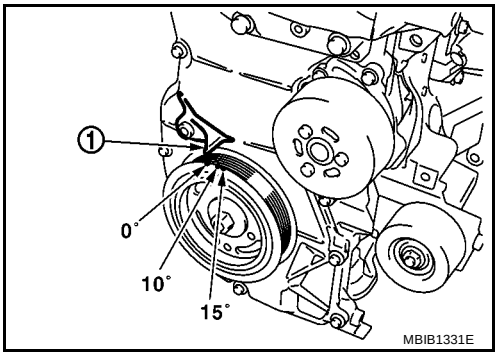

Method B

1. Remove ignition coil No. 4 (1).
   - ⇦: Vehicle front

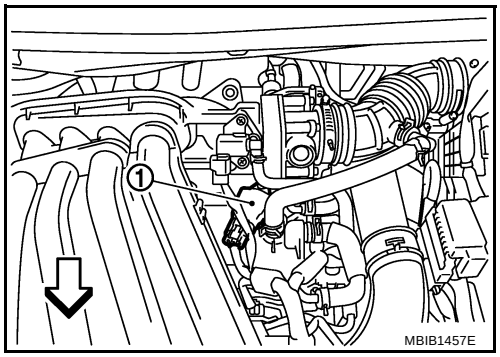

2. Connect ignition coil No. 4 (1) and spark plug No. 4 with suitable high-tension wire A as shown, and attach timing light clamp B to this wire.

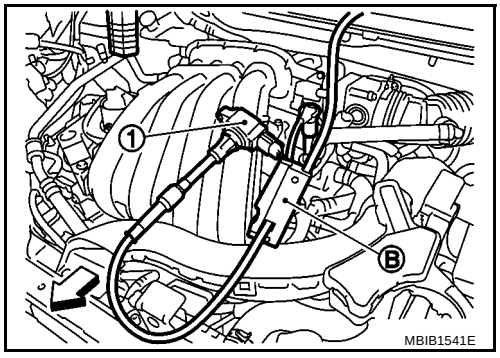

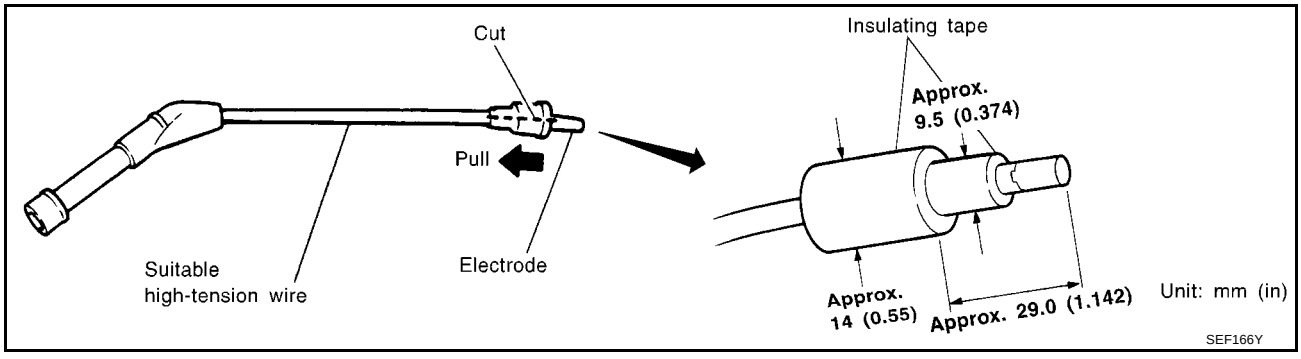

3. Check ignition timing.
   - Timing indicator (1)

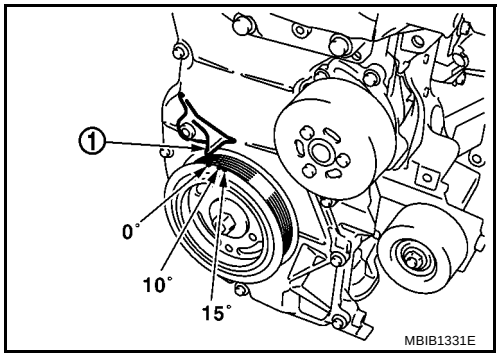

Accelerator Pedal Released Position Learning

BBS004KS

DESCRIPTION

Accelerator Pedal Released Position Learning is an operation to learn the fully released position of the accelerator pedal by monitoring the accelerator pedal position sensor output signal. It must be performed each time harness connector of accelerator pedal position sensor or ECM is disconnected.

OPERATION PROCEDURE

1. Make sure that accelerator pedal is fully released.
2. Turn ignition switch ON and wait at least 2 seconds.
3. Turn ignition switch OFF and wait at least 10 seconds.

4. Turn ignition switch ON and wait at least 2 seconds.
5. Turn ignition switch OFF and wait at least 10 seconds.

Throttle Valve Closed Position Learning

BBS004KT

DESCRIPTION

Throttle Valve Closed Position Learning is an operation to learn the fully closed position of the throttle valve by monitoring the throttle position sensor output signal. It must be performed each time harness connector of electric throttle control actuator or ECM is disconnected.

OPERATION PROCEDURE

1. Make sure that accelerator pedal is fully released.
2. Turn ignition switch ON.
3. Turn ignition switch OFF and wait at least 10 seconds.
   Make sure that throttle valve moves during above 10 seconds by confirming the operating sound.

Idle Air Volume Learning

BBS004KU

DESCRIPTION

Idle Air Volume Learning is an operation to learn the idle air volume that keeps each engine within the specific range. It must be performed under any of the following conditions:

- Each time electric throttle control actuator or ECM is replaced.
- Idle speed or ignition timing is out of specification.

PREPARATION

Before performing Idle Air Volume Learning, make sure that all of the following conditions are satisfied.
Learning will be cancelled if any of the following conditions are missed for even a moment.

- Battery voltage: More than 12.9V (At idle)
- Engine coolant temperature: 70 - 95°C (158 - 203°F)
- PNP switch: ON
- Electric load switch: OFF
  (Air conditioner, headlamp, rear window defogger)
  On vehicles equipped with daytime light systems, set lighting switch to the 1st position to light only small lamps.
- Steering wheel: Neutral (Straight-ahead position)
- Vehicle speed: Stopped
- Transmission: Warmed-up
  - A/T models
    - With CONSULT-II: Drive vehicle until “FLUID TEMP SE” in “DATA MONITOR” mode of “A/T” system indicates less than 0.9V.
    - Without CONSULT-II: Drive vehicle for 10 minutes.
  - M/T models
    - Drive vehicle for 10 minutes.

OPERATION PROCEDURE

With CONSULT-II

1. Perform EC-1278, "Accelerator Pedal Released Position Learning" .
2. Perform EC-1279, "Throttle Valve Closed Position Learning" .
3. Start engine and warm it up to normal operating temperature.
4. Check that all items listed under the topic PREPARATION (previously mentioned) are in good order.

5. Select “IDLE AIR VOL LEARN” in “WORK SUPPORT” mode.

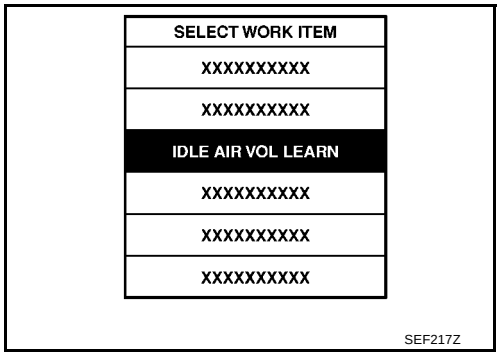

6. Touch “START” and wait 20 seconds.

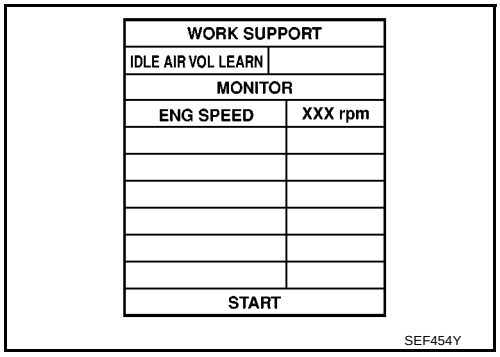

7. Make sure that “CMPLT” is displayed on CONSULT-II screen. If “CMPLT” is not displayed, Idle Air Volume Learning will not be carried out successfully. In this case, find the cause of the incident by referring to the DIAGNOSTIC PROCEDURE below.
8. Rev up the engine two or three times and make sure that idle speed and ignition timing are within the specifications.

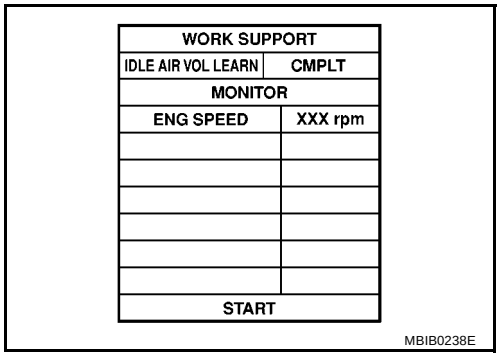

ITEM	SPECIFICATION
Idle speed	A/T: 700 ± 50 rpm (in P or N position) M/T: 650 ± 50 rpm (in Neutral position)
Ignition timing	A/T: 6 ± 5° BTDC (in P or N position) M/T: 6 ± 5° BTDC (in Neutral position)

Without CONSULT-II

NOTE:

- **It is better to count the time accurately with a clock.**
- **It is impossible to switch the diagnostic mode when an accelerator pedal position sensor circuit has a malfunction.**

1. Perform EC-1278, "Accelerator Pedal Released Position Learning" .
2. Perform EC-1279, "Throttle Valve Closed Position Learning" .
3. Start engine and warm it up to normal operating temperature.
4. Check that all items listed under the topic PREPARATION (previously mentioned) are in good order.
5. Turn ignition switch OFF and wait at least 10 seconds.
6. Confirm that accelerator pedal is fully released, turn ignition switch ON and wait 3 seconds.
7. Repeat the following procedure quickly five times within 5 seconds.

a. Fully depress the accelerator pedal.
b. Fully release the accelerator pedal.

8. Wait 7 seconds, fully depress the accelerator pedal and keep it for approx. 20 seconds until the MI stops blinking and turned ON.
9. Fully release the accelerator pedal within 3 seconds after the MI turned ON.
10. Start engine and let it idle.

11. Wait 20 seconds.

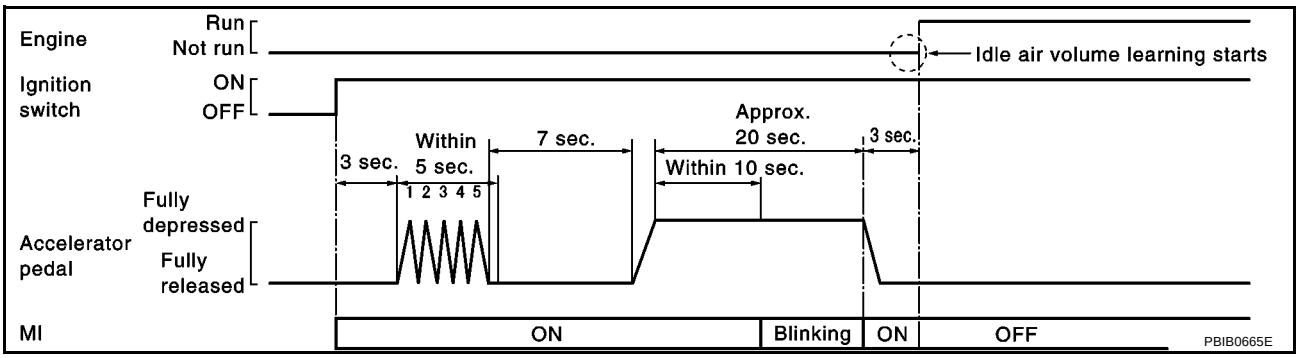

12. Rev up the engine two or three times and make sure that idle speed and ignition timing are within the specifications.

ITEM	SPECIFICATION
Idle speed	A/T: 700 ± 50 rpm (in P or N position) M/T: 650 ± 50 rpm (in Neutral position)
Ignition timing	A/T: 6 ± 5° BTDC (in P or N position) M/T: 6 ± 5° BTDC (in Neutral position)

13. If idle speed and ignition timing are not within the specification, Idle Air Volume Learning will not be carried out successfully. In this case, find the cause of the incident by referring to the Diagnostic Procedure below.

DIAGNOSTIC PROCEDURE

If idle air volume learning cannot be performed successfully, proceed as follows:

1. **Check that throttle valve is fully closed.**
2. **Check PCV valve operation.**
3. **Check that downstream of throttle valve is free from air leakage.**
4. **When the above three items check out OK, engine component parts and their installation condition are questionable. Check and eliminate the cause of the incident.**
   It is useful to perform **EC-1597, "SERVICE DATA AND SPECIFICATIONS (SDS)"** **.**
5. **If any of the following conditions occur after the engine has started, eliminate the cause of the incident and perform Idle Air Volume Learning all over again:**

- **Engine stalls.**
- **Erroneous idle.**

Fuel Pressure Check

BBS004KV

FUEL PRESSURE RELEASE

With CONSULT-II

1. Turn ignition switch ON.
2. Perform “FUEL PRESSURE RELEASE” in “WORK SUPPORT” mode with CONSULT-II.
3. Start engine.
4. After engine stalls, crank it two or three times to release all fuel pressure.
5. Turn ignition switch OFF.

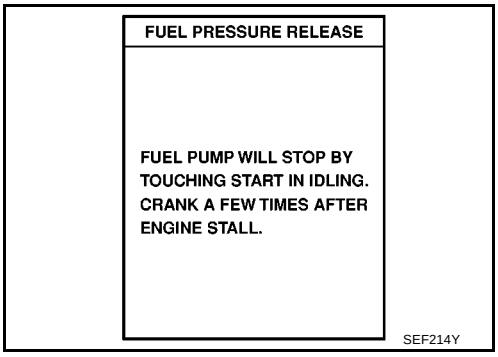

Without CONSULT-II

1. Remove fuel pump fuse located in IPDM E/R.
2. Start engine.
3. After engine stalls, crank it 2 or 3 times to release all fuel pressure.
4. Turn ignition switch OFF.
5. Reinstall fuel pump fuse after servicing fuel system.

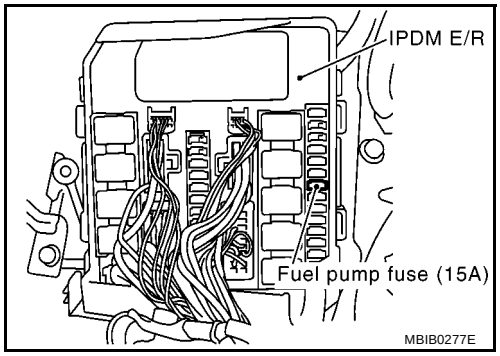

FUEL PRESSURE CHECK

CAUTION:

- **Before disconnecting fuel line, release fuel pressure from fuel line to eliminate danger.**
- **The fuel hose connection method used when taking fuel pressure check must not be used for other purposes.**
- **Be careful not to scratch or put debris around connection area when servicing, so that the quick connector maintains sealability with O-rings inside.**
- **Do not perform fuel pressure check with electrical systems operating (i.e. lights, rear defogger, A/C, etc.) Fuel pressure gauge may indicate false readings due to varying engine load and changes in manifold vacuum.**

NOTE:
Prepare pans or saucers under the disconnected fuel line because the fuel may spill out. The fuel pressure cannot be completely released because E11 models do not have fuel return system.

1. Release fuel pressure to zero. Refer to EC-1281, "FUEL PRESSURE RELEASE" .
2. Prepare fuel hose for fuel pressure check B and fuel tube adapter (KV10118400) D, then connect fuel pressure gauge A.
   - ⇦: To quick connector
   - ⬅: To fuel tube (engine side)
   - C: Clamp
   - Use suitable fuel hose for fuel pressure check (genuine NISSAN fuel hose without quick connector).
   - To avoid unnecessary force or tension to hose, use moderately long fuel hose for fuel pressure check.
   - Do not use the fuel hose for checking fuel pressure with damage or cracks on it.
   - Use Pressure Gauge to check fuel pressure.

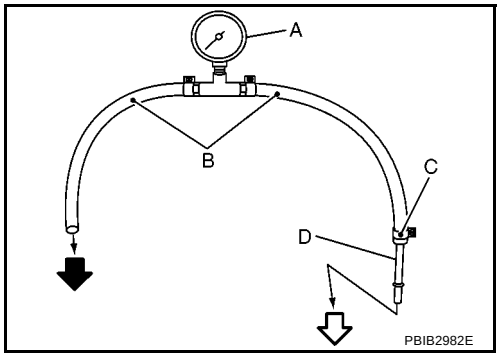

3. Remove fuel hose. Refer to EM-120, "INTAKE MANIFOLD" .
   - Do not twist or kink fuel hose because it is plastic hose.
4. Connect fuel hose for fuel pressure check (1) to fuel tube (engine side) with clamp (2) as shown in the figure.
   - No.2 spool (5)
   - Wipe off oil or dirt from hose insertion part using cloth moistened with gasoline.
   - Apply proper amount of gasoline between top of the fuel tube (3) and No.1 spool (4).
   - Insert fuel hose for fuel pressure check until it touches the No.1 spool on fuel tube.
   - Use NISSAN genuine hose clamp (part number: 16439 N4710 or 16439 40U00).
   - When reconnecting fuel line, always use new clamps.
   - Use a torque driver to tighten clamps.

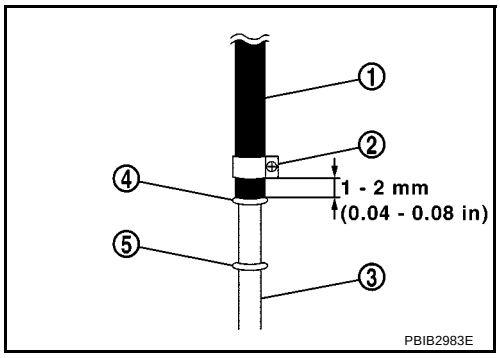

- Install hose clamp to the position within 1 - 2 mm (0.04 - 0.08 in).

Tightening torque: 1 - 1.5 N·m (0.1 - 0.15 kg-m, 9 - 13 in-lb)

- Make sure that clamp screw does not contact adjacent parts.

5. Connect fuel tube adapter to quick connector.
   - A: Fuel pressure gauge
   - B: Fuel hose for fuel pressure check
6. After connecting fuel hose for fuel pressure check, pull the hose with a force of approximately 98 N (10 kg, 22 lb) to confirm fuel tube does not come off.
7. Turn ignition switch ON and check for fuel leakage.
8. Start engine and check for fuel leakage.
9. Read the indication of fuel pressure gauge.
   - Do not perform fuel pressure check with system operating. Fuel pressure gauge may indicate false readings.
   - During fuel pressure check, confirm for fuel leakage from fuel connection every 3 minutes.

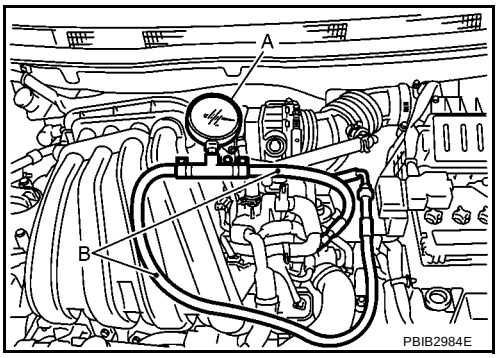

At idling: Approximately 350 kPa (3.5 bar, 3.57 kg/cm^2 , 51 psi)

10. If result is unsatisfactory, go to next step.
11. Check the following.
    - Fuel hoses and fuel tubes for clogging
    - Fuel filter for clogging
    - Fuel pump
    - Fuel pressure regulator for clogging

    If OK, replace fuel pressure regulator.
    If NG, repair or replace.

TROUBLE DIAGNOSIS

PFP:00004

Trouble Diagnosis Introduction

BBS004KW

INTRODUCTION

The engine has an ECM to control major systems such as fuel control, ignition control, idle air control system, etc. The ECM accepts input signals from sensors and instantly drives actuators. It is essential that both input and output signals are proper and stable. At the same time, it is important that there are no malfunctions such as vacuum leaks, fouled spark plugs, or other malfunctions with the engine.

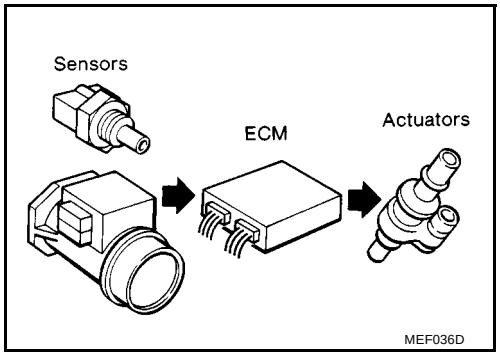

It is much more difficult to diagnose an incident that occurs intermittently rather than continuously. Most intermittent incidents are caused by poor electric connections or improper wiring. In this case, careful checking of suspected circuits may help prevent the replacement of good parts.

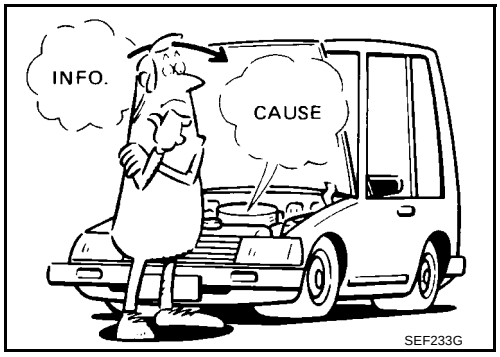

A visual check only may not find the cause of the incidents. A road test with CONSULT-II or a circuit tester connected should be performed. Follow the Work Flow on EC-1285, "WORK FLOW" .
Before undertaking actual checks, take a few minutes to talk with a customer who approaches with a driveability complaint. The customer can supply good information about such incidents, especially intermittent ones. Find out what symptoms are present and under what conditions they occur. A Diagnostic Worksheet like the example on EC-1289, "Worksheet Sample" should be used.
Start your diagnosis by looking for conventional malfunctions first. This will help troubleshoot driveability malfunctions on an electronically controlled engine vehicle.

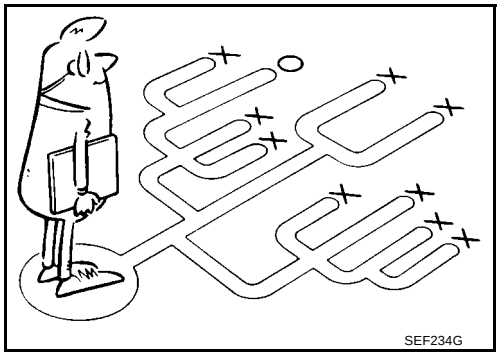

WORK FLOW

Overall Sequence

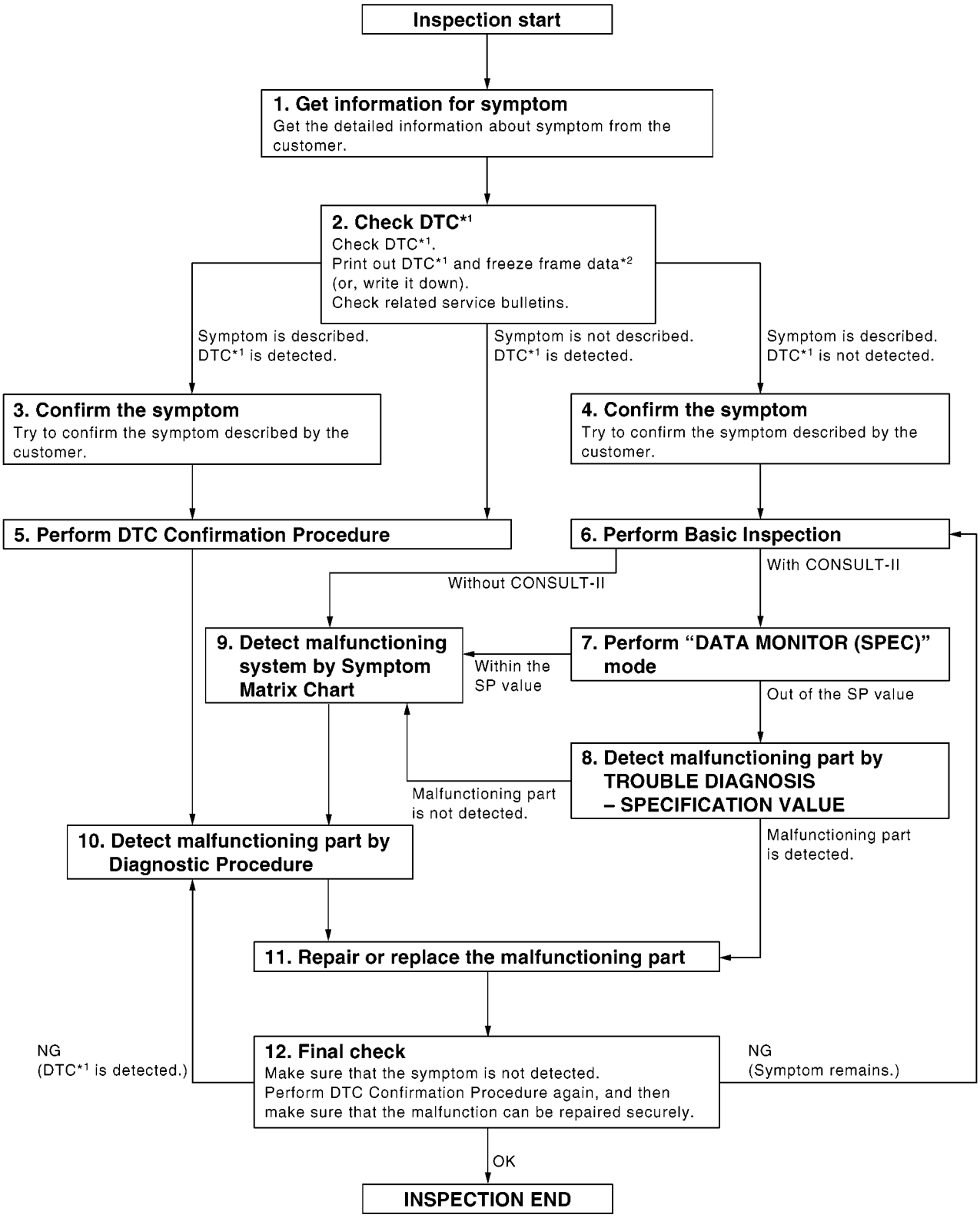

*1: Include 1st trip DTC.
*2: Include 1st trip freeze frame data.

PBIB2267E

Detailed Flow

1. GET INFORMATION FOR SYMPTOM

Get the detailed information from the customer about the symptom (the condition and the environment when the incident/malfunction occurred) using the EC-1288, "DIAGNOSTIC WORKSHEET" .

>> GO TO 2.

2. CHECK DTC*1

1. Check DTC*1 .
2. Perform the following procedure if DTC*1 is displayed.

- Record DTC*1 and freeze frame data*2 . (Print them out with CONSULT-II.)
- Erase DTC*1 . (Refer to EC-1267, "HOW TO ERASE EMISSION-RELATED DIAGNOSTIC INFORMATION" .)
- Study the relationship between the cause detected by DTC*1 and the symptom described by the customer. (Symptom Matrix Chart is useful. Refer to EC-1292, "Symptom Matrix Chart" .)

3. Check related service bulletins for information.

Is any symptom described and any DTC detected?

Symptom is described, DTC*1 is displayed>>GO TO 3.
Symptom is described, DTC*1 is not displayed>>GO TO 4.
Symptom is not described, DTC*1 is displayed>>GO TO 5.

3. CONFIRM THE SYMPTOM

Try to confirm the symptom described by the customer (except MI ON).
DIAGNOSIS WORK SHEET is useful to verify the incident.
Connect CONSULT-II to the vehicle in “DATA MONITOR (AUTO TRIG)” mode and check real time diagnosis results.
Verify relation between the symptom and the condition when the symptom is detected.

>> GO TO 5.

4. CONFIRM THE SYMPTOM

Try to confirm the symptom described by the customer.
DIAGNOSIS WORK SHEET is useful to verify the incident.
Connect CONSULT-II to the vehicle in “DATA MONITOR (AUTO TRIG)” mode and check real time diagnosis results.
Verify relation between the symptom and the condition when the symptom is detected.

>> GO TO 6.

5. PERFORM DTC CONFIRMATION PROCEDURE

Perform DTC Confirmation Procedure for the displayed DTC*1 , and then make sure that DTC*1 is detected again.
At this time, always connect CONSULT-II to the vehicle, and check diagnostic results in real time on “DATA MONITOR (AUTO TRIG)”.

If two or more DTCs*1 are detected, refer to EC-1290, "DTC Inspection Priority Chart" and determine trouble diagnosis order.

NOTE:

- Freeze frame data*2 is useful if the DTC*1 is not detected.
- Perform Overall Function Check if DTC Confirmation Procedure is not included on Service Manual. This simplified check procedure is an effective alternative though DTC*1 cannot be detected during this check.
  If the result of Overall Function Check is NG, it is the same as the detection of DTC*1 by DTC Confirmation Procedure.

Is DTC*1 detected?

Yes >> GO TO 10.
No >> Check according to EC-1336, "TROUBLE DIAGNOSIS FOR INTERMITTENT INCIDENT" .

6. PERFORM BASIC INSPECTION

Perform EC-1272, "Basic Inspection" .

With CONSULT-II>>GO TO 7.
Without CONSULT-II>>GO TO 9.

7. PERFORM DATA MONITOR (SPEC) MODE

With CONSULT-II
Make sure that “MAS A/F SE-B1”, “B/FUEL SCHDL”, and “A/F ALPHA-B1” are within the SP value using CONSULT-II “DATA MONITOR (SPEC)” mode. Refer to EC-1326, "Inspection Procedure" .

Are they within the SP value?

Yes >> GO TO 9.
No >> GO TO 8.

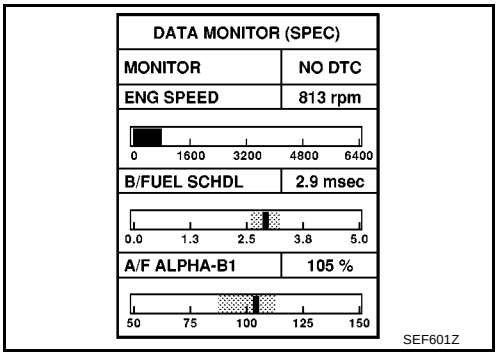

8. DETECT MALFUNCTIONING PART BY TROUBLE DIAGNOSIS - SPECIFICATION VALUE

Detect malfunctioning part according to EC-1327, "Diagnostic Procedure" .

Is malfunctioning part detected?

Yes >> GO TO 11.
No >> GO TO 9.

9. DETECT MALFUNCTIONING SYSTEM BY SYMPTOM MATRIX CHART

Detect malfunctioning system according to EC-1292, "Symptom Matrix Chart" based on the confirmed symptom in step 4, and determine the trouble diagnosis order based on possible causes and symptom.

>> GO TO 10.

10. DETECT MALFUNCTIONING PART BY DIAGNOSTIC PROCEDURE

Inspect according to Diagnostic Procedure of the system.

NOTE:
The Diagnostic Procedure in EC section described based on open circuit inspection. A short circuit inspection is also required for the circuit check in the Diagnostic Procedure. For details, refer to Circuit Inspection in GI-25, "How to Perform Efficient Diagnosis for an Electrical Incident" .

Is malfunctioning part detected?

Yes >> GO TO 11.
No >> Monitor input data from related sensors or check voltage of related ECM terminals using CONSULT-II. Refer to EC-1304, "ECM Terminals and Reference Value" , EC-1321, "CONSULT-II Reference Value in Data Monitor" .

11. REPAIR OR REPLACE THE MALFUNCTIONING PART

1. Repair or replace the malfunctioning part.
2. Reconnect parts or connectors disconnected during Diagnostic Procedure again after repair and replacement.
3. Check DTC. If DTC is displayed, erase it, refer to EC-1267, "HOW TO ERASE EMISSION-RELATED DIAGNOSTIC INFORMATION" .

>> GO TO 12.

12. FINAL CHECK

When DTC was detected in step 2, perform DTC Confirmation Procedure or Overall Function Check again, and then make sure that the malfunction have been repaired securely.
When symptom was described from the customer, refer to confirmed symptom in step 3 or 4, and make sure that the symptom is not detected.

OK or NG

NG (DTC*1 is detected)>>GO TO 10.
NG (Symptom remains)>>GO TO 6.
OK >> 1. Before returning the vehicle to the customer, make sure to erase unnecessary DTC*1 in ECM. (Refer to EC-1267, "HOW TO ERASE EMISSION-RELATED DIAGNOSTIC INFORMATION" .)
2. **INSPECTION END**

*1: Include 1st trip DTC.
*2: Include 1st trip freeze frame data.

DIAGNOSTIC WORKSHEET

Description

There are many operating conditions that lead to the malfunction of engine components. A good grasp of such conditions can make troubleshooting faster and more accurate.
In general, each customer feels differently about a incident. It is important to fully understand the symptoms or conditions for a customer complaint.
Utilize a diagnostic worksheet like the one on the next page in order to organize all the information for troubleshooting.

KEY POINTS

WHAT ..... Vehicle & engine model
WHEN ..... Date, Frequencies
WHERE..... Road conditions
HOW ..... Operating conditions, Weather conditions, Symptoms

SEF907L

Worksheet Sample

Customer name MR/MS		Model & Year	VIN
Engine #		Trans.	Mileage
Incident Date		Manuf. Date	In Service Date
Fuel and fuel filler cap		☐ Vehicle ran out of fuel causing misfire ☐ Fuel filler cap was left off or incorrectly screwed on.	
Symptoms	☐ Startability	☐ Impossible to start ☐ No combustion ☐ Partial combustion ☐ Partial combustion affected by throttle position ☐ Partial combustion NOT affected by throttle position ☐ Possible but hard to start ☐ Others [ ]	
	☐ Idling	☐ No fast idle ☐ Unstable ☐ High idle ☐ Low idle ☐ Others [ ]	
	☐ Driveability	☐ Stumble ☐ Surge ☐ Knock ☐ Lack of power ☐ Intake backfire ☐ Exhaust backfire ☐ Others [ ]	
	☐ Engine stall	☐ At the time of start ☐ While idling ☐ While accelerating ☐ While decelerating ☐ Just after stopping ☐ While loading	
Incident occurrence		☐ Just after delivery ☐ Recently ☐ In the morning ☐ At night ☐ In the daytime	
Frequency		☐ All the time ☐ Under certain conditions ☐ Sometimes	
Weather conditions		☐ Not affected	
	Weather	☐ Fine ☐ Raining ☐ Snowing ☐ Others [ ]	
	Temperature	☐ Hot ☐ Warm ☐ Cool ☐ Cold ☐ Humid °F	
Engine conditions		☐ Cold ☐ During warm-up ☐ After warm-up Engine speed 0 2,000 4,000 6,000 8,000 rpm	
Road conditions		☐ In town ☐ In suburbs ☐ Highway ☐ Off road (up/down)	
Driving conditions		☐ Not affected ☐ At starting ☐ While idling ☐ At racing ☐ While accelerating ☐ While cruising ☐ While decelerating ☐ While turning (RH/LH) Vehicle speed 0 10 20 30 40 50 60 MPH	
Malfunction indicator lamp		☐ Turned on ☐ Not turned on	

MTBL0017

DTC Inspection Priority Chart

BBS004KX

If some DTCs are displayed at the same time, perform inspections one by one based on the following priority chart.

NOTE:

- **If DTC U1000 or U1001 is displayed with other DTC, first perform the trouble diagnosis for DTC U1000, U1001. Refer to EC-1344, "DTC U1000, U1001 CAN COMMUNICATION LINE" .**
- **If DTC U1010 is displayed with other DTC, first perform the trouble diagnosis for DTC U1010. Refer to EC-1347, "DTC U1010 CAN COMMUNICATION" .**

Priority	Detected items (DTC)
1	● U1000 U1001 CAN communication line ● U1010 CAN communication ● P0102 P0103 Mass air flow sensor ● P0117 P0118 Engine coolant temperature sensor ● P0122 P0123 P0222 P0223 P1225 P1226 P2135 Throttle position sensor ● P0327 P0328 Knock sensor ● P0335 Crankshaft position sensor (POS) ● P0340 Camshaft position sensor (PHASE) ● P0605 ECM ● P1229 Sensor power supply ● P1610 - P1615 NATS ● P1706 Park/Neutral position (PNP) switch ● P2122 P2123 P2127 P2128 P2138 Accelerator pedal position sensor
2	● P0132 P0134 Heated oxygen sensor 1 ● P0138 Heated oxygen sensor 2 ● P1065 ECM ● P1111 Intake valve timing control solenoid valve ● P1122 Electric throttle control function ● P1124 P1126 Throttle control motor relay ● P1128 Throttle control motor ● P1217 Engine over temperature (OVERHEAT) ● P1805 Brake switch
3	● P0011 Intake valve timing control ● P1121 Electric throttle control actuator ● P1212 ESP communication line

Fail-Safe Chart

BBS004KY

When the DTC listed below is detected, the ECM enters fail-safe mode and the MI lights up.

DTC No.	Detected items	Engine operating condition in fail-safe mode
P0102 P0103	Mass air flow sensor circuit	Engine speed will not rise more than 2,400 rpm due to the fuel cut.
P0122 P0123 P0222 P0223 P2135	Throttle position sensor	The ECM controls the electric throttle control actuator in regulating the throttle opening in order for the idle position to be within +10 degrees. The ECM regulates the opening speed of the throttle valve to be slower than the normal condition. So, the acceleration will be poor.
P1121	Electric throttle control actuator	(When electric throttle control actuator does not function properly due to the return spring malfunction:) ECM controls the electric throttle actuator by regulating the throttle opening around the idle position. The engine speed will not rise more than 2,000 rpm.
		(When throttle valve opening angle in fail-safe mode is not in specified range:) ECM controls the electric throttle control actuator by regulating the throttle opening to 20 degrees or less.
		(When ECM detects the throttle valve is stuck open:) While the vehicle is driving, it slows down gradually by fuel cut. After the vehicle stops, the engine stalls. The engine can restart in N or P (A/T), Neutral (M/T) position, and engine speed will not exceed 1,000 rpm or more.
P1122	Electric throttle control function	ECM stops the electric throttle control actuator control, throttle valve is maintained at a fixed opening (approx. 5 degrees) by the return spring.
P1124 P1126	Throttle control relay	ECM stops the electric throttle control actuator control, throttle valve is maintained at a fixed opening (approx. 5 degrees) by the return spring.
P1128	Throttle control motor	ECM stops the electric throttle control actuator control, throttle valve is maintained at a fixed opening (approx. 5 degrees) by the return spring.
P1229	Sensor power supply	ECM stops the electric throttle control actuator control, throttle valve is maintained at a fixed opening (approx. 5 degrees) by the return spring.
P1805	Brake switch	ECM controls the electric throttle control actuator by regulating the throttle opening to a small range. Therefore, acceleration will be poor.
		Vehicle condition: Driving condition
		When engine is idling: Normal
		When accelerating: Poor acceleration
P2122 P2123 P2127 P2128 P2138	Accelerator pedal position sensor	The ECM controls the electric throttle control actuator in regulating the throttle opening in order for the idle position to be within +10 degrees. The ECM regulates the opening speed of the throttle valve to be slower than the normal condition. So, the acceleration will be poor.

- When there is an open circuit on MI circuit, the ECM cannot warn the driver by lighting up MI when there is malfunction on engine control system.
  Therefore, when electrical controlled throttle and part of ECM related diagnoses are continuously detected as NG for 5 trips, ECM warns the driver that engine control system malfunctions and MI circuit is open by means of operating fail-safe function.
  The fail-safe function also operates when above diagnoses except MI circuit are detected and demands the driver to repair the malfunction.

Engine operating condition in fail-safe mode	Engine speed will not rise more than 2,500 rpm due to the fuel cut

Symptom Matrix Chart

BBS004KZ

SYSTEM — BASIC ENGINE CONTROL SYSTEM

		SYMPTOM													Reference page
		HARD/NO START/RESTART (EXCP. HA)	ENGINE STALL	HESITATION/SURGING/FLAT SPOT	SPARK KNOCK/DETONATION	LACK OF POWER/POOR ACCELERATION	HIGH IDLE/LOW IDLE	ROUGH IDLE/HUNTING	IDLING VIBRATION	SLOW/NO RETURN TO IDLE	OVERHEATS/WATER TEMPERATURE HIGH	EXCESSIVE FUEL CONSUMPTION	EXCESSIVE OIL CONSUMPTION	BATTERY DEAD (UNDER CHARGE)	
Warranty symptom code		AA	AB	AC	AD	AE	AF	AG	AH	AJ	AK	AL	AM	HA	
Fuel	Fuel pump circuit	1	1	2	3	2		2	2			3		2	EC-1543
	Fuel pressure regulator system	3	3	4	4	4	4	4	4	4		4			EC-1282
	Fuel injector circuit	1	1	2	3	2		2	2			2			EC-1537
	Evaporative emission system	3	3	4	4	4	4	4	4	4		4			EC-1257
Air	Positive crankcase ventilation system	3	3	4	4	4	4	4	4	4		4	1		EC-1262
	Incorrect idle speed adjustment						1	1	1	1		1			EC-1272
	Electric throttle control actuator	1	1	2	3	3	2	2	2	2		2		2	EC-1430, EC-1433
Ignition	Incorrect ignition timing adjustment	3	3	1	1	1		1	1			1			EC-1272
	Ignition circuit	1	1	2	2	2		2	2			2			EC-1580
Main power supply and ground circuit		2	2	3	3	3		3	3		2	3			EC-1337
Mass air flow sensor circuit		1	1	2	2	2		2	2			2			EC-1354
Engine coolant temperature sensor circuit					3		3			3					EC-1361
Heated oxygen sensor 1 circuit					3										EC-1373, EC-1381, EC-1549
Throttle position sensor circuit							2			2					EC-1367, EC-1395, EC-1467, EC-1469, EC-1511
Accelerator pedal position sensor circuit				3	2	1									EC-1471, EC-1492, EC-1501, EC-1517
Knock sensor circuit				2								3			EC-1401
Crankshaft position sensor (POS) circuit		2	2												EC-1405
Camshaft position sensor (PHASE) circuit		3	2												EC-1413
Vehicle speed signal circuit			2	3		3						3			EC-1595
ECM		2	2	3	3	3	3	3	3	3	3	3			EC-1420, EC-1423
Intake valve timing control solenoid valve circuit			3	2		1	3	2	2	3		3			EC-1425

	SYMPTOM													Reference page
	HARD/NO START/RESTART (EXCP. HA)	ENGINE STALL	HESITATION/SURGING/FLAT SPOT	SPARK KNOCK/DETONATION	LACK OF POWER/POOR ACCELERATION	HIGH IDLE/LOW IDLE	ROUGH IDLE/HUNTING	IDLING VIBRATION	SLOW/NO RETURN TO IDLE	OVERHEATS/WATER TEMPERATURE HIGH	EXCESSIVE FUEL CONSUMPTION	EXCESSIVE OIL CONSUMPTION	BATTERY DEAD (UNDER CHARGE)	
Warranty symptom code	AA	AB	AC	AD	AE	AF	AG	AH	AJ	AK	AL	AM	HA	
PNP switch circuit			3		3		3	3			3			EC-1479
Refrigerant pressure sensor circuit		2				3			3		4			EC-1590
Electrical load signal circuit							3							EC-1528
Air conditioner circuit	2	2	3	3	3	3	3	3	3		3		2	ATC-20, MTC-20
ABS actuator and electric unit (control unit)			4											BRC-8, BRC-49

1 - 6: The numbers refer to the order of inspection.
(continued on next page)

SYSTEM — ENGINE MECHANICAL & OTHER

		SYMPTOM													Reference page
		HARD/NO START/RESTART (EXCP. HA)	ENGINE STALL	HESITATION/SURGING/FLAT SPOT	SPARK KNOCK/DETONATION	LACK OF POWER/POOR ACCELERATION	HIGH IDLE/LOW IDLE	ROUGH IDLE/HUNTING	IDLING VIBRATION	SLOW/NO RETURN TO IDLE	OVERHEATS/WATER TEMPERATURE HIGH	EXCESSIVE FUEL CONSUMPTION	EXCESSIVE OIL CONSUMPTION	BATTERY DEAD (UNDER CHARGE)	
Warranty symptom code		AA	AB	AC	AD	AE	AF	AG	AH	AJ	AK	AL	AM	HA	
Fuel	Fuel tank	5	5												FL-19
	Fuel piping			5	5	5		5	5			5			FL-14
	Vapor lock														—
	Valve deposit	5		5	5	5		5	5			5			—
	Poor fuel (Heavy weight gasoline, Low octane)														—

		SYMPTOM													Reference page
		HARD/NO START/RESTART (EXCP. HA)	ENGINE STALL	HESITATION/SURGING/FLAT SPOT	SPARK KNOCK/DETONATION	LACK OF POWER/POOR ACCELERATION	HIGH IDLE/LOW IDLE	ROUGH IDLE/HUNTING	IDLING VIBRATION	SLOW/NO RETURN TO IDLE	OVERHEATS/WATER TEMPERATURE HIGH	EXCESSIVE FUEL CONSUMPTION	EXCESSIVE OIL CONSUMPTION	BATTERY DEAD (UNDER CHARGE)	
Warranty symptom code		AA	AB	AC	AD	AE	AF	AG	AH	AJ	AK	AL	AM	HA	
Air	Air duct		5	5		5		5	5			5			EM-118
	Air cleaner														EM-118
	Air leakage from air duct (Mass air flow sensor — electric throttle control actuator)	5			5		5			5					EM-118
	Electric throttle control actuator														EM-120
	Air leakage from intake manifold/ Collector/Gasket														EM-120
Cranking	Battery	1	1	1		1		1	1			1		1	SC-5
	Generator circuit														SC-15
	Starter circuit	3													SC-45
	Signal plate	6													EM-189
	PNP switch	4													MT-16, MT-46 , AT-105 , AT-293
Engine	Cylinder head	5	5	5	5	5		5	5			5			EM-173
	Cylinder head gasket										4		3		
	Cylinder block	6	6	6	6	6		6	6			6	4		EM-189
	Piston														
	Piston ring														
	Connecting rod														
	Bearing														
	Crankshaft														
Valve mecha-nism	Timing chain	5	5	5	5	5		5	5			5			EM-142
	Camshaft														EM-151
	Intake valve timing control														EM-151
	Intake valve												3		EM-173
	Exhaust valve														
Exhaust	Exhaust manifold/Tube/Muffler/ Gasket	5	5	5	5	5		5	5			5			EX-3, EM-124
	Three way catalyst														

		SYMPTOM													Reference page
		HARD/NO START/RESTART (EXCP. HA)	ENGINE STALL	HESITATION/SURGING/FLAT SPOT	SPARK KNOCK/DETONATION	LACK OF POWER/POOR ACCELERATION	HIGH IDLE/LOW IDLE	ROUGH IDLE/HUNTING	IDLING VIBRATION	SLOW/NO RETURN TO IDLE	OVERHEATS/WATER TEMPERATURE HIGH	EXCESSIVE FUEL CONSUMPTION	EXCESSIVE OIL CONSUMPTION	BATTERY DEAD (UNDER CHARGE)	
Warranty symptom code		AA	AB	AC	AD	AE	AF	AG	AH	AJ	AK	AL	AM	HA	
Lubrication	Oil pan/Oil strainer/Oil pump/Oil filter/Oil gallery	5	5	5	5	5		5	5			5			EM-127, LU-16 , LU-19
	Oil level (Low)/Filthy oil														LU-16
Cooling	Radiator/Hose/Radiator filler cap	5	5	5	5	5		5	5		4	5			CO-31
	Thermostat									5					CO-38
	Water pump														CO-36
	Water gallery														CO-26
	Cooling fan									5					CO-31
	Coolant level (Low)/Contaminated coolant														CO-27
NATS (Nissan Anti-Theft System)		1	1												BL-215

1 - 6: The numbers refer to the order of inspection.

Engine Control Component Parts Location

BBS004L0

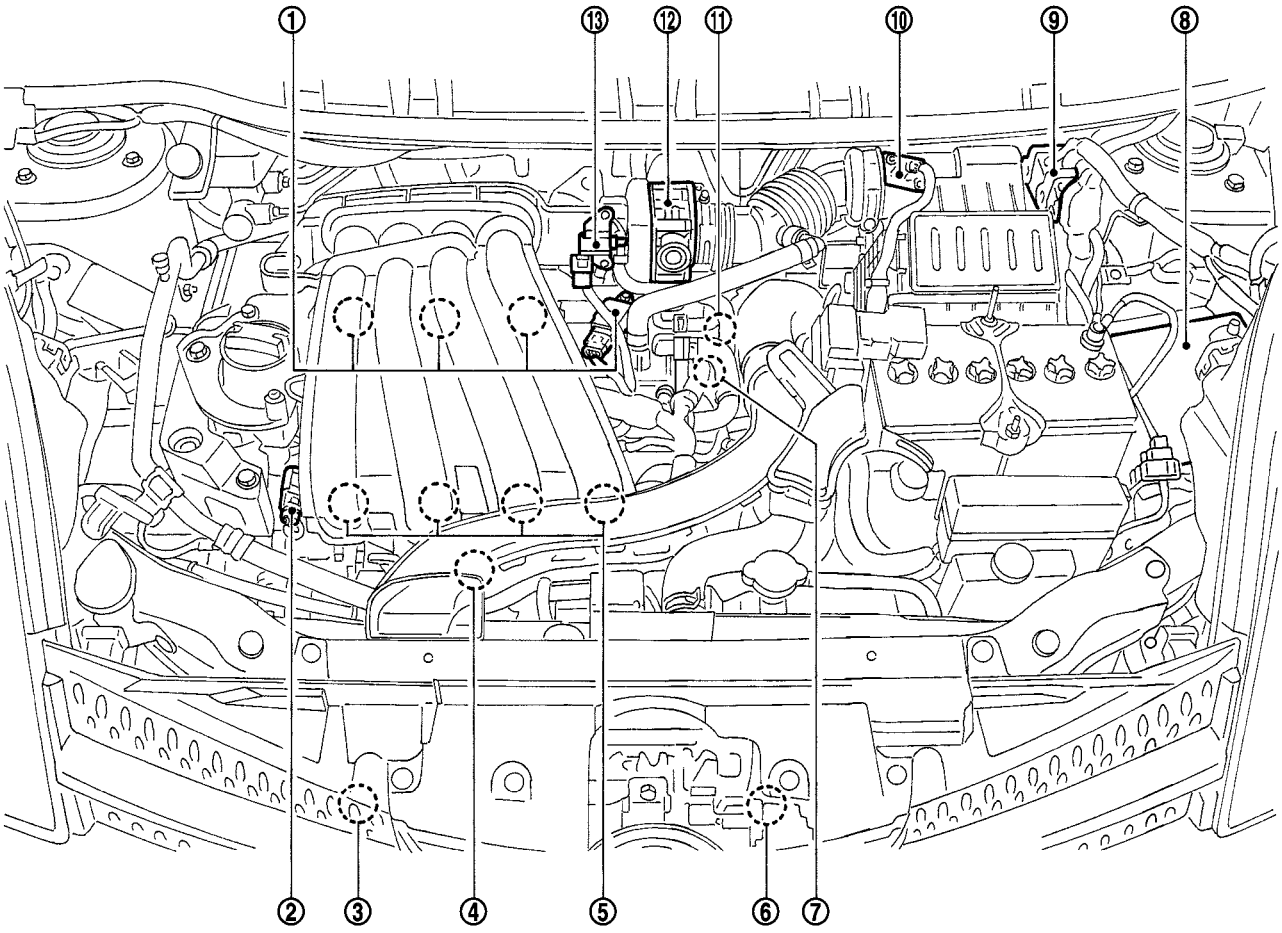

MBIB1542E

1. Ignition coil (with power transistor) and spark plug
2. Intake valve timing control solenoid valve
3. Refrigerant pressure sensor
4. Knock sensor
5. Fuel injector
6. Cooling fan motor
7. Camshaft position sensor (PHASE)
8. IPDM E/R
9. ECM
10. Mass air flow sensor (with intake air temperature sensor)
11. Engine coolant temperature sensor
12. Electric throttle control actuator (with built-in throttle position sensor, throttle control motor)
13. EVAP canister purge volume control solenoid valve

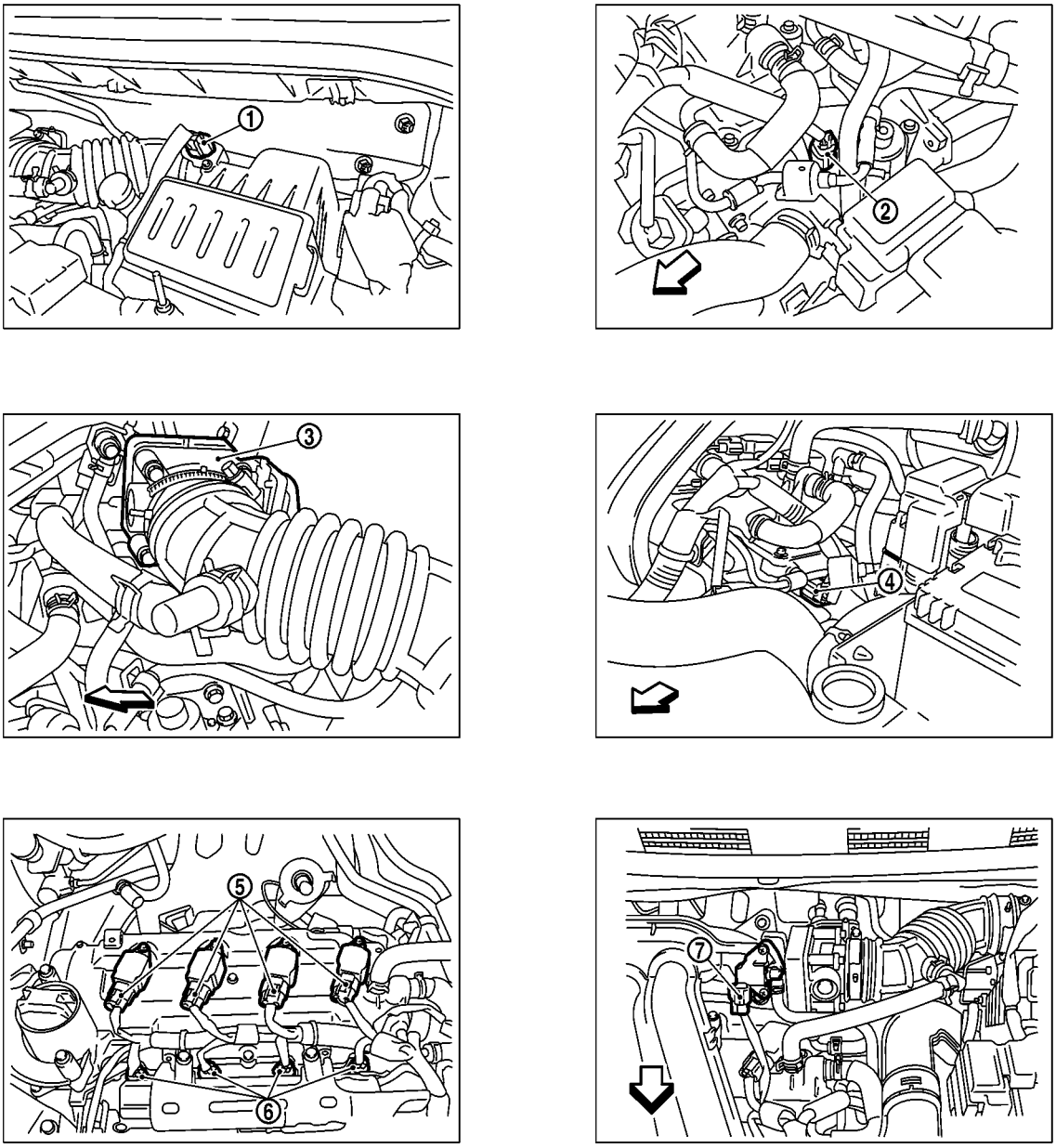

PBIB2940E

⇦ : Vehicle front

1. Mass air flow sensor (with intake air temperature sensor)
2. Engine coolant temperature sensor
3. Electric throttle control actuator
4. Camshaft position sensor (PHASE)
5. Ignition coil (with power transistor)
6. Fuel injector
7. EVAP canister purge volume control solenoid valve

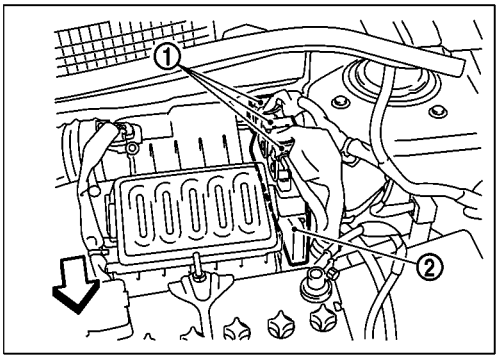

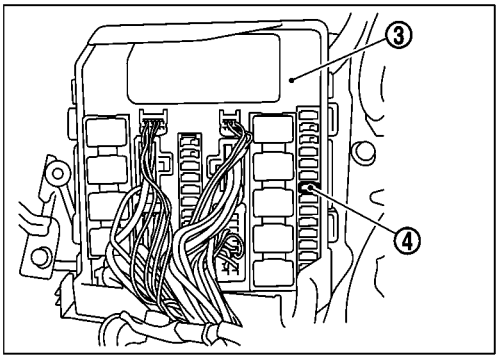

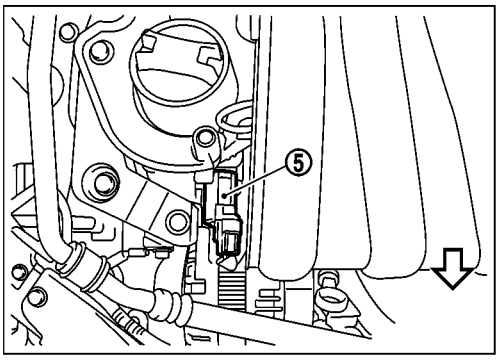

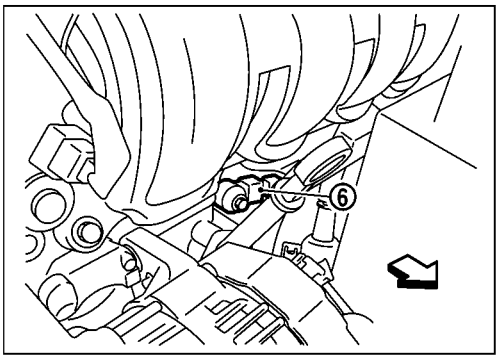

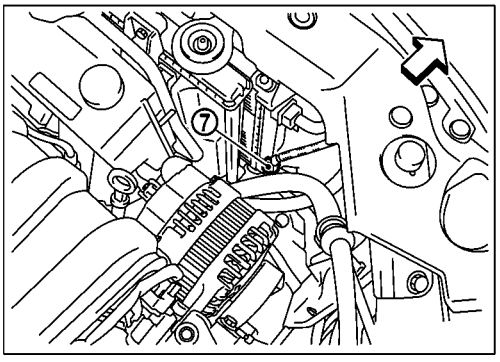

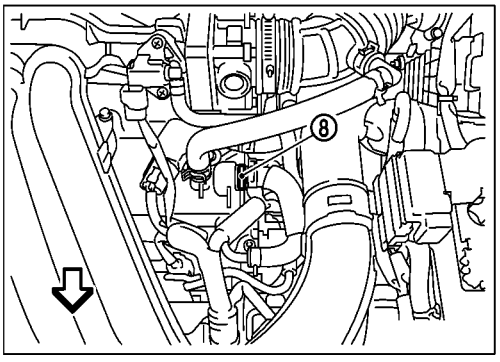

MBIB1543E

⇦ : Vehicle front

1. ECM harness connectors
2. ECM
3. IPDM E/R
4. Fuel pump fuse (15A)
5. Intake valve timing control solenoid valve
6. Knock sensor
7. Refrigerant pressure sensor
8. PCV valve

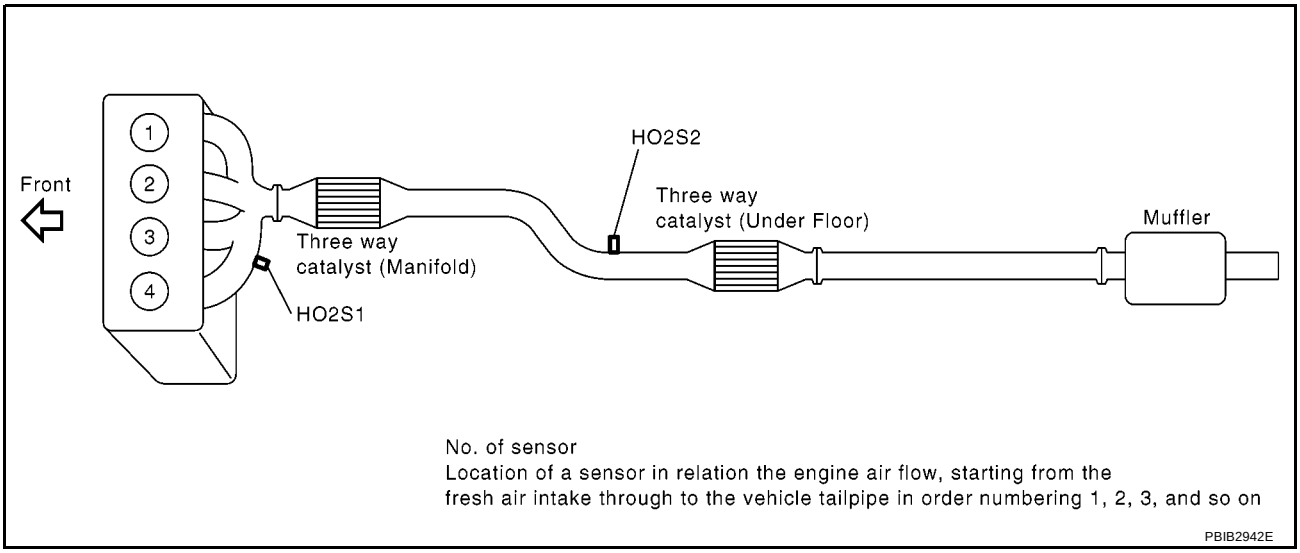

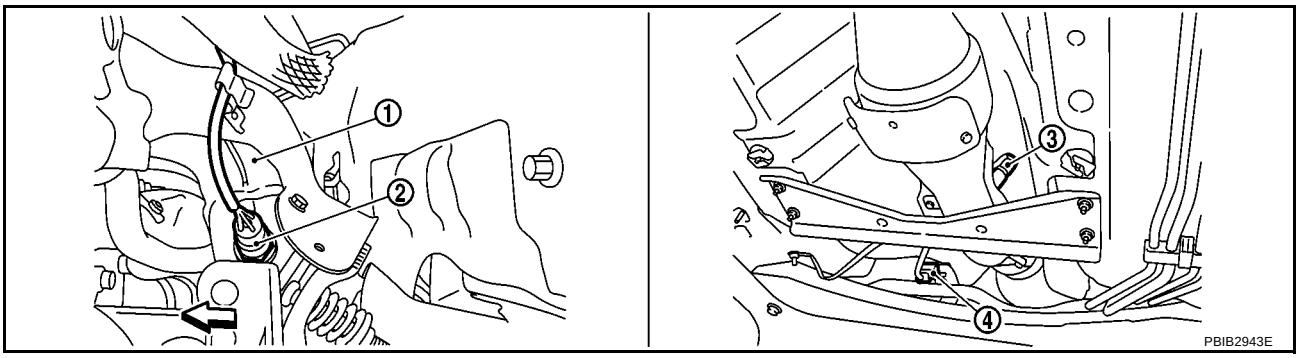

⇦ : Vehicle front

1. Exhaust manifold
2. Heated oxygen sensor 1
3. Heated oxygen sensor 2
4. Heated oxygen sensor 2 harness connector

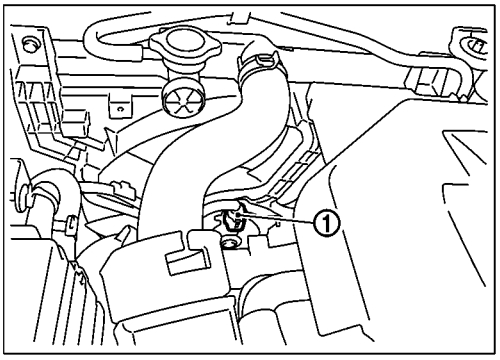

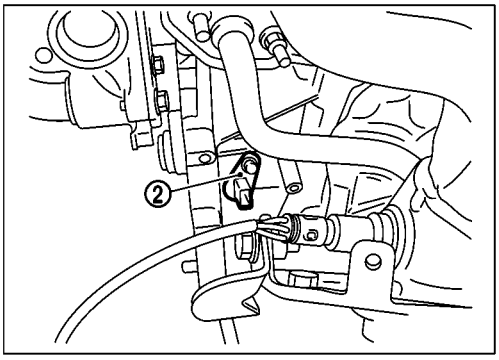

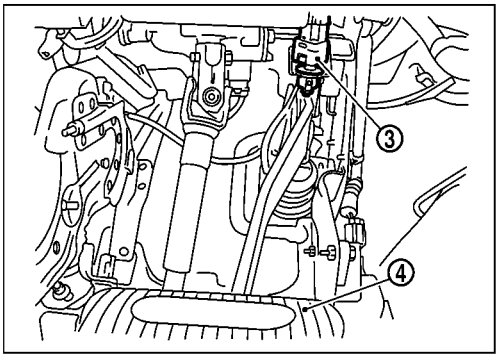

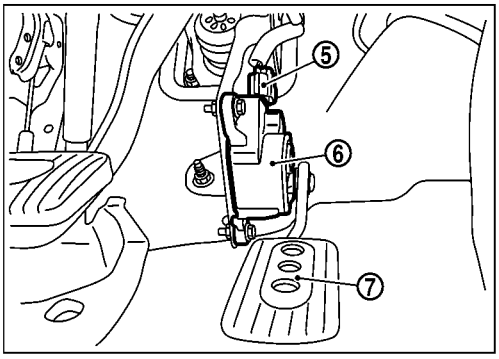

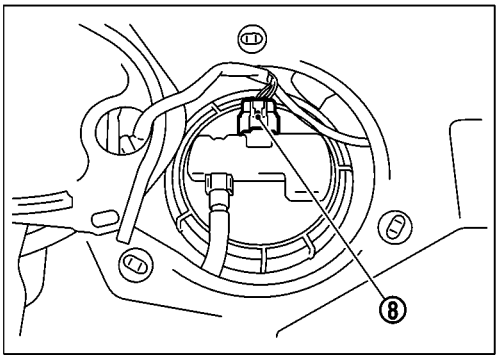

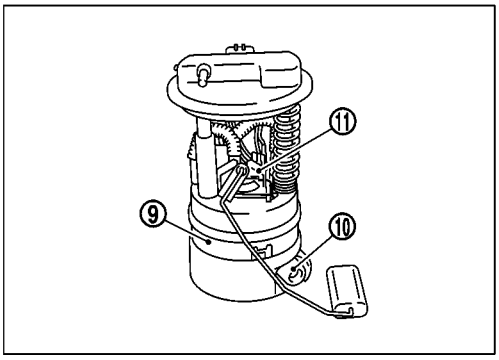

MBIB1544E

1. Cooling fan motor
2. Crankshaft position sensor (POS)
3. Stop lamp switch
4. Brake pedal
5. Accelerator pedal position sensor harness connector
6. Accelerator pedal position sensor
7. Accelerator pedal
8. Fuel level sensor unit and fuel pump harness connector
9. Fuel pump and fuel filter
10. Fuel pressure regulator
11. Fuel level sensor unit

Vacuum Hose Drawing

BBS004L1

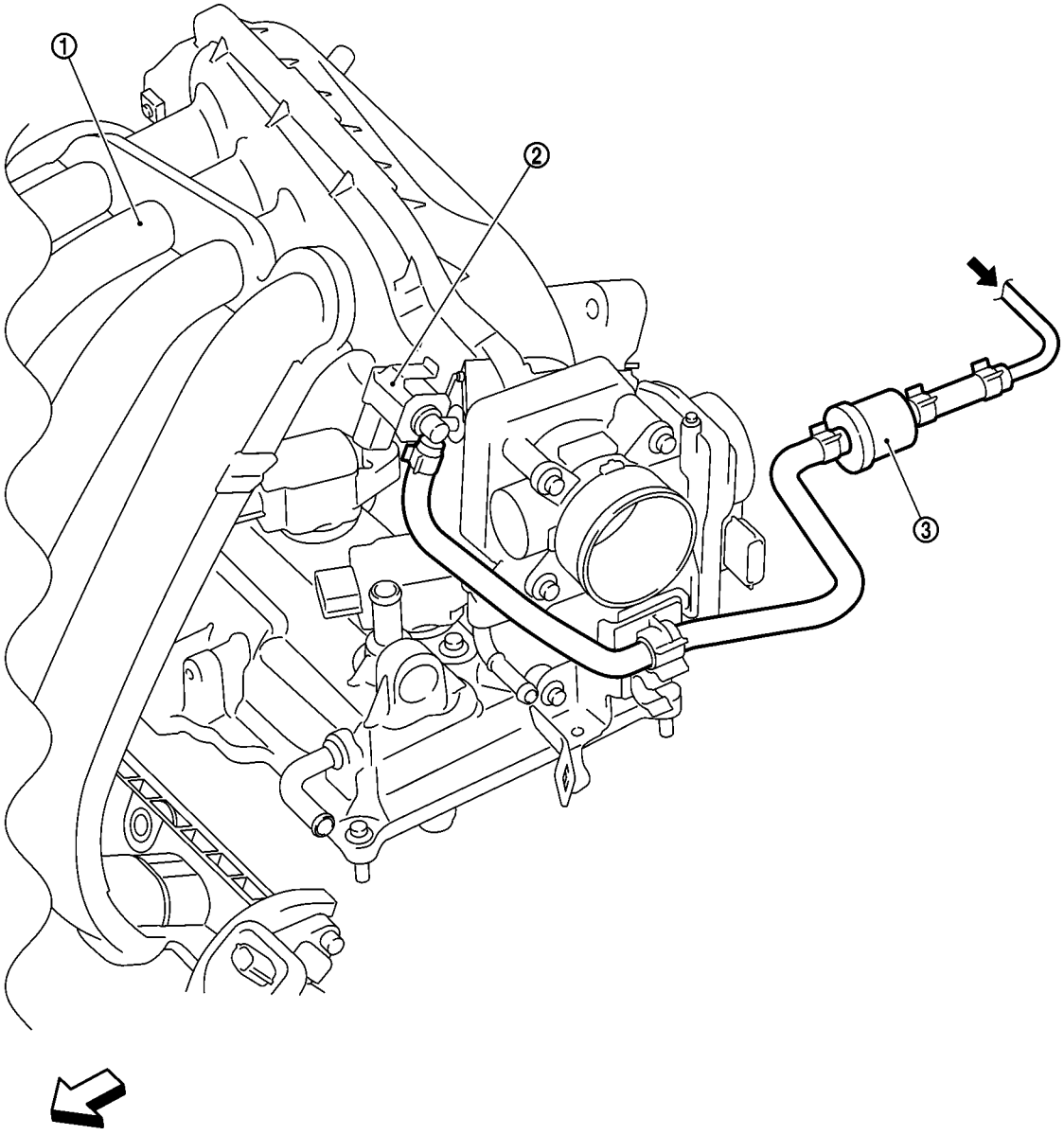

PBIB2946E

⇦ : Vehicle front

⬅ : To EVAP canister

1. Intake manifold
2. EVAP canister purge volume control solenoid valve
3. EVAP purge resonator

NOTE:
Do not use soapy water or any type of solvent while installing vacuum hoses or purge hoses.

Refer to EC-1250, "System Diagram" for Vacuum Control System.

Circuit Diagram

BBS004L2

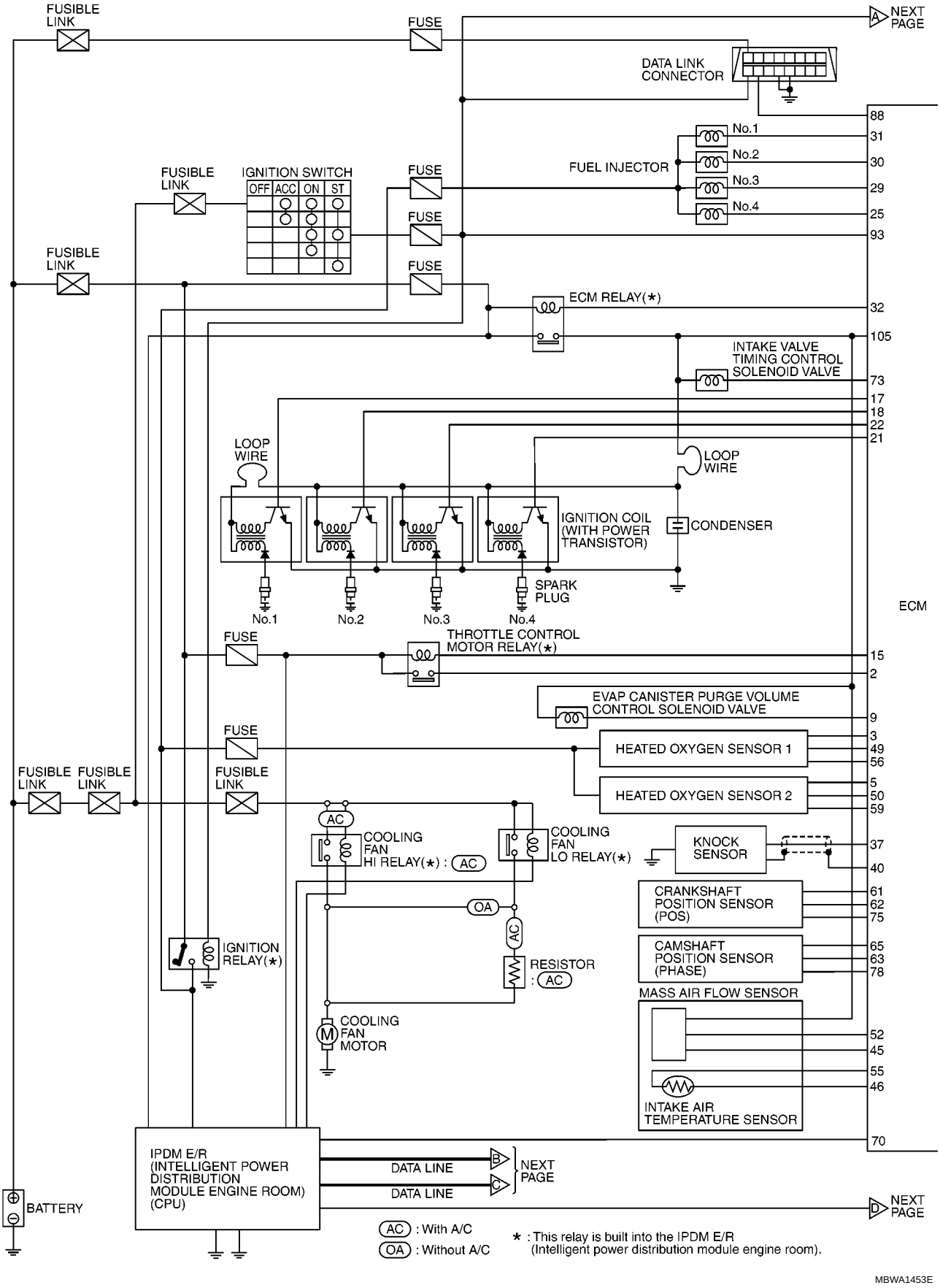

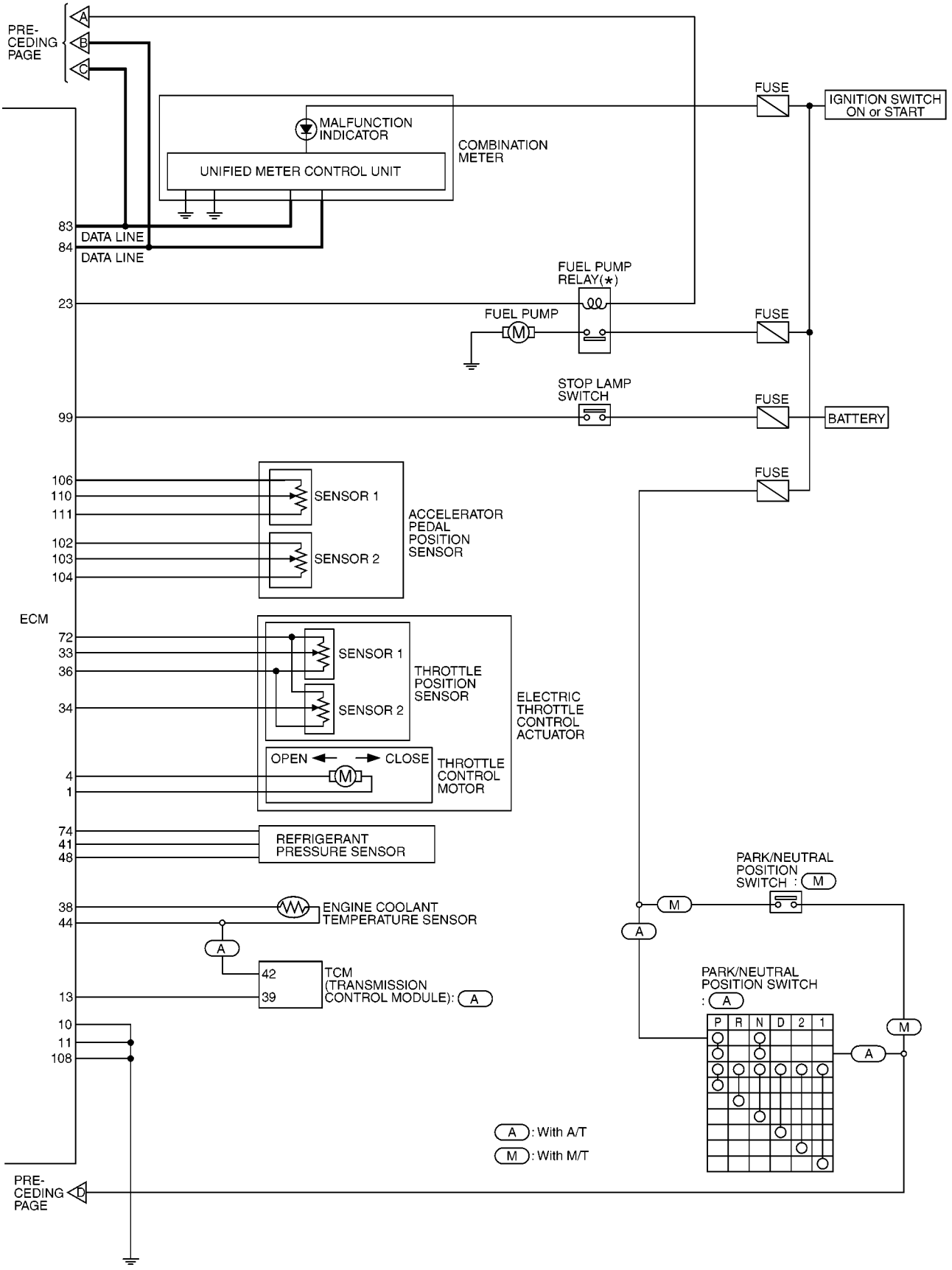
PRE-CEDING PAGE
A
B
C
MALFUNCTION INDICATOR
UNIFIED METER CONTROL UNIT
COMBINATION METER
FUSE
IGNITION SWITCH ON or START
83
84
DATA LINE
DATA LINE
FUEL PUMP RELAY(*)
23
FUEL PUMP
M
FUSE
STOP LAMP SWITCH
99
FUSE
BATTERY
FUSE
106
110
111
SENSOR 1
102
103
104
SENSOR 2
ACCELERATOR PEDAL POSITION SENSOR
ECM
72
33
36
34
SENSOR 1
SENSOR 2
THROTTLE POSITION SENSOR
ELECTRIC THROTTLE CONTROL ACTUATOR
OPEN
CLOSE
4
1
THROTTLE CONTROL MOTOR
74
41
48
REFRIGERANT PRESSURE SENSOR
PARK/NEUTRAL POSITION SWITCH : M
38
44
ENGINE COOLANT TEMPERATURE SENSOR
A
42
39
13
TCM (TRANSMISSION CONTROL MODULE): A
PARK/NEUTRAL POSITION SWITCH : A
P R N D 2 1
10
11
108
A : With A/T
M : With M/T
PRE-CEDING PAGE
D

MBWA1454E

ECM Harness Connector Terminal Layout

BBS004L3

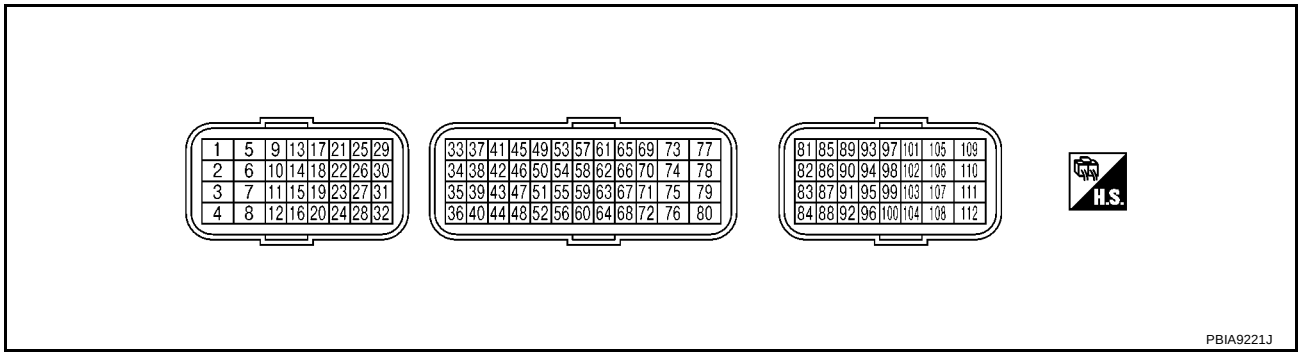

ECM Terminals and Reference Value

BBS004L4

PREPARATION

1. ECM (1) is located in the engine room left side near battery.
   - ⇦: Vehicle front

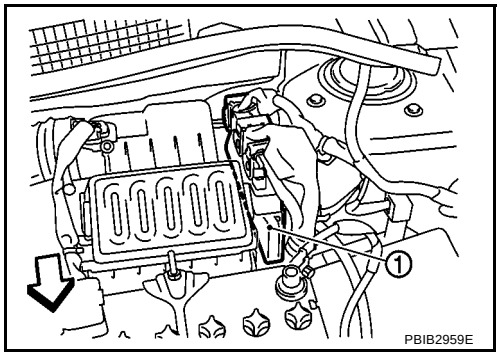

2. Disconnect ECM harness connector.
   - When disconnecting ECM harness connector, loosen (A) it with levers (1) as far as they will go as shown in the figure.
   - ECM (2)
   - Fasten (B)
3. Connect a break-out box (SST) and Y-cable adapter (SST) between the ECM and ECM harness connector.
   - Use extreme care not to touch 2 pins at one time.
   - Data is for comparison and may not be exact.

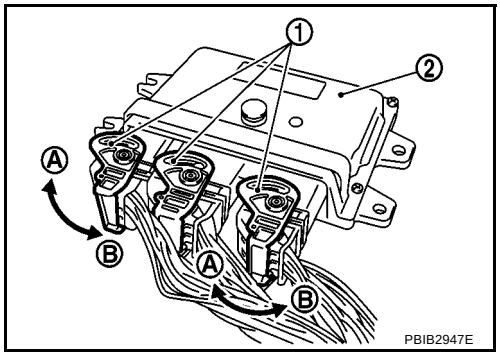

ECM INSPECTION TABLE

Specification data are reference values and are measured between each terminal and ground.
Pulse signal is measured by CONSULT-II.

CAUTION:

Do not use ECM ground terminals when measuring input/output voltage. Doing so may result in damage to the ECMs transistor. Use a ground other than ECM terminals, such as the ground.

TERMINAL NO.	WIRE COLOR	ITEM	CONDITION	DATA (DC Voltage)
1	P	Throttle control motor (Open)	**[Ignition switch: ON]** ● Engine stopped ● Shift lever: D (A/T), 1st (M/T) ● Accelerator pedal: Fully depressed	Approximately 3.2V★ 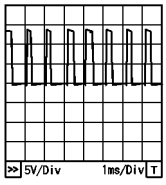 PBIA8150J
2	LG	Throttle control motor power supply	**[Ignition switch: ON]**	BATTERY VOLTAGE (11 - 14V)

TERMINAL NO.	WIRE COLOR	ITEM	CONDITION	DATA (DC Voltage)
3	Y	Heated oxygen sensor 1 heater	**[Engine is running]** ● **Warm-up condition** ● Engine speed: Below 3,600 rpm	Approximately 10V★ 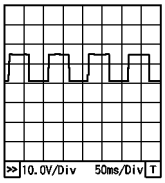 PBIA8148J
			[Ignition switch: ON] ● Engine stopped **[Engine is running]** ● Engine speed: Above 3,600 rpm	BATTERY VOLTAGE (11 - 14V)
4	L	Throttle control motor (Close)	**[Ignition switch: ON]** ● Engine stopped ● Shift lever: D (A/T), 1st (M/T) ● Accelerator pedal: Fully released	Approximately 1.8V★ 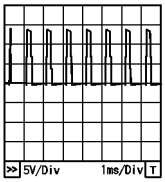 PBIA8149J
5	GR	Heated oxygen sensor 2 heater	**[Engine is running]** ● Below 3,600 rpm after the following conditions are met. – Engine: After warming up – Keeping the engine speed between 3,500 and 4,000 rpm for 1 minute and at idle for 1 minute under no load	Approximately 10V★ 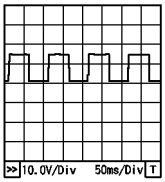 PBIA8148J
			[Ignition switch: ON] ● Engine stopped **[Engine is running]** ● Engine speed: Above 3,600 rpm	BATTERY VOLTAGE (11 - 14V)
9	LG	EVAP canister purge volume control solenoid valve	**[Engine is running]** ● Idle speed	BATTERY VOLTAGE (11 - 14V)★ 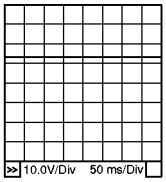 PBIB0050E
			[Engine is running] ● Engine speed: About 2,000 rpm (More than 100 seconds after starting engine)	Approximately 10V★ 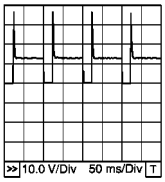 PBIB0520E
10 11	B B/W	ECM ground	**[Engine is running]** ● Idle speed	Body ground

TERMINAL NO.	WIRE COLOR	ITEM	CONDITION	DATA (DC Voltage)
13	L	Tachometer signal	**[Engine is running]** ● **Warm-up condition** ● Idle speed **NOTE:** The pulse cycle changes depending on rpm at idle.	3 - 5V★ 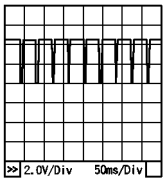 PBIA8164J
			[Engine is running] ● **Warm-up condition** ● Engine speed: 2,000 rpm	3 - 5V★ 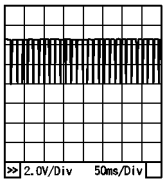 PBIA8165J
15	G	Throttle control motor relay	**[Ignition switch: OFF]**	BATTERY VOLTAGE (11 - 14V)
			[Ignition switch: ON]	0 - 1.0V
17 18 21 22	V BR G Y	Ignition signal No. 1 Ignition signal No. 2 Ignition signal No. 4 Ignition signal No. 3	**[Engine is running]** ● **Warm-up condition** ● Idle speed **NOTE:** The pulse cycle changes depending on rpm at idle.	0 - 0.3V★ 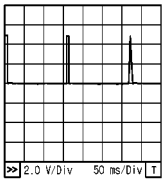 PBIA9265J
			[Engine is running] ● **Warm-up condition** ● Engine speed: 2,500 rpm	0.2 - 0.5V★ 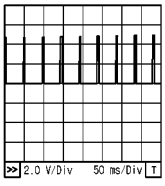 PBIA9266J
23	R	Fuel pump relay	**[Ignition switch: ON]** ● For 1 second after turning ignition switch ON **[Engine is running]**	0 - 1.0V
			[Ignition switch: ON] ● More than 1 second after turning ignition switch ON	BATTERY VOLTAGE (11 - 14V)

TERMINAL NO.	WIRE COLOR	ITEM	CONDITION	DATA (DC Voltage)
25 29 30 31	R O GR L	Fuel injector No. 4 Fuel injector No. 3 Fuel injector No. 2 Fuel injector No. 1	**[Engine is running]** ● **Warm-up condition** ● Idle speed **NOTE:** The pulse cycle changes depending on rpm at idle.	BATTERY VOLTAGE (11 - 14V)★ 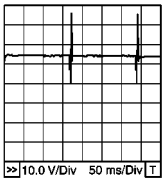 PBIB0529E
			[Engine is running] ● **Warm-up condition** ● Engine speed: 2,000 rpm	BATTERY VOLTAGE (11 - 14V)★ 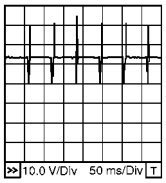 PBIA4943J
32	P	ECM relay (Self shut-off)	**[Engine is running]** **[Ignition switch: OFF]** ● For a few seconds after turning ignition switch OFF	0 - 1.0V
			[Ignition switch: OFF] ● More than a few seconds after turning ignition switch OFF	BATTERY VOLTAGE (11 - 14V)
33	Y	Throttle position sensor 1	**[Ignition switch: ON]** ● Engine stopped ● Shift lever: D (A/T), 1st (M/T) ● Accelerator pedal: Fully released	More than 0.36V
			[Ignition switch: ON] ● Engine stopped ● Shift lever: D (A/T), 1st (M/T) ● Accelerator pedal: Fully depressed	Less than 4.75V
34	R	Throttle position sensor 2	**[Ignition switch: ON]** ● Engine stopped ● Shift lever: D (A/T), 1st (M/T) ● Accelerator pedal: Fully released	Less than 4.75V
			[Ignition switch: ON] ● Engine stopped ● Shift lever: D (A/T), 1st (M/T) ● Accelerator pedal: Fully depressed	More than 0.36V
36	BR	Sensor ground (Throttle position sensor)	**[Engine is running]** ● **Warm-up condition** ● Idle speed	Approximately 0V
37	W	Knock sensor	**[Engine is running]** ● Idle speed	Approximately 2.5V
38	P	Engine coolant temperature sensor	**[Engine is running]**	Approximately 0 - 4.8V Output voltage varies with engine coolant temperature.

TERMINAL NO.	WIRE COLOR	ITEM	CONDITION	DATA (DC Voltage)
40	—	Sensor ground (Knock sensor)	**[Engine is running]** ● **Warm-up condition** ● Idle speed	Approximately 0V
41	BR	Refrigerant pressure sensor	**[Engine is running]** ● **Warm-up condition** ● Both A/C switch and blower fan switch: ON (Compressor operates.)	1.0 - 4.0V
44	B	Sensor ground (Engine coolant temperature sensor)	**[Engine is running]** ● **Warm-up condition** ● Idle speed	Approximately 0V
45	G	Mass air flow sensor	**[Ignition switch: ON]** ● Engine stopped	Approximately 0.4V
			[Engine is running] ● **Warm-up condition** ● Idle speed	1.0 - 1.3V
			[Engine is running] ● **Warm-up condition** ● Engine is revving from idle to about 4,000 rpm	1.0 - 1.3 to Approximately 2.4V (Check for linear voltage rise in response to engine being increased to about 4,000 rpm.)
46	V	Intake air temperature sensor	**[Engine is running]**	Approximately 0 - 4.8V Output voltage varies with intake air temperature.
48	Y	Sensor ground (Refrigerant pressure sensor)	**[Engine is running]** ● **Warm-up condition** ● Idle speed	Approximately 0V
49	BR	Heated oxygen sensor 1	**[Engine is running]** ● **Warm-up condition** ● Engine speed: 2,000 rpm	0 - Approximately 1.0V (Periodically change)
50	B	Heated oxygen sensor 2	**[Engine is running]** ● Revving engine from idle to 3,000 rpm quickly after the following conditions are met. – Engine: After warming up – Keeping the engine speed between 3,500 and 4,000 rpm for 1 minute and at idle for 1 minute under no load.	0 - Approximately 1.0V
52	LG	Sensor ground (Mass air flow sensor)	**[Engine is running]** ● **Warm-up condition** ● Idle speed	Approximately 0V
55	O	Sensor ground (Intake air temperature sensor)	**[Engine is running]** ● **Warm-up condition** ● Idle speed	Approximately 0V
56	R	Sensor ground (Heated oxygen sensor 1)	**[Engine is running]** ● **Warm-up condition** ● Idle speed	Approximately 0V
59	LG	Sensor ground (Heated oxygen sensor 2)	**[Engine is running]** ● **Warm-up condition** ● Idle speed	Approximately 0V

TERMINAL NO.	WIRE COLOR	ITEM	CONDITION	DATA (DC Voltage)
61	Y	Crankshaft position sensor (POS)	**[Engine is running]** ● **Warm-up condition** ● Idle speed **NOTE:** The pulse cycle changes depending on rpm at idle.	0 - 1.0V★ 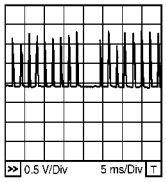 MBIB1453E
			[Engine is running] ● Engine speed: 2,000 rpm	0 - 1.0V★ 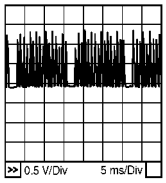 MBIB1454E
62	W	Sensor ground [Crankshaft position sensor (POS)]	**[Engine is running]** ● **Warm-up condition** ● Idle speed	Approximately 0V
63	B	Sensor ground [Camshaft position sensor (PHASE)]	**[Engine is running]** ● **Warm-up condition** ● Idle speed	Approximately 0V
65	R	Camshaft position sensor (PHASE)	**[Engine is running]** ● **Warm-up condition** ● Idle speed **NOTE:** The pulse cycle changes depending on rpm at idle.	0 - 1.0V★ 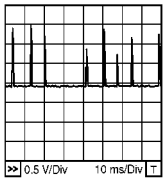 MBIB1455E
			[Engine is running] ● Engine speed: 2,000 rpm	0 - 1.0V★ 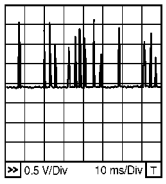 MBIB1456E
70	GR	Park/Neutral position (PNP) switch	**[Ignition switch: ON]** ● Shift lever: P or N (A/T models) ● Shift lever: Neutral (M/T models)	Approximately 0V
			[Ignition switch: ON] ● Except above position	BATTERY VOLTAGE (11 - 14V)
72	L	Sensor power supply (Throttle position sensor)	**[Ignition switch: ON]**	Approximately 5V

TERMINAL NO.	WIRE COLOR	ITEM	CONDITION	DATA (DC Voltage)
73	LG	Intake valve timing control solenoid valve	**[Engine is running]** ● **Warm-up condition** ● Idle speed	BATTERY VOLTAGE (11 - 14V)
			[Engine is running] ● **Warm-up condition** ● Engine speed: 2,000 rpm	7 - 10V★ 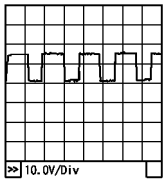 PBIA4937J
74	W	Sensor power supply (Refrigerant pressure sensor)	**[Ignition switch: ON]**	Approximately 5V
75	G	Sensor power supply [Crankshaft position sensor (POS)]	**[Ignition switch: ON]**	Approximately 5V
78	O	Sensor power supply [Camshaft position sensor (PHASE)]	**[Ignition switch: ON]**	Approximately 5V
83	Y	CAN communication line	**[Ignition switch: ON]**	Approximately 1.7 - 2.3V
84	L	CAN communication line	**[Ignition switch: ON]**	Approximately 2.6 - 3.2V
88	LG	DATA link connector	**[Ignition switch: ON]** ● CONSULT-II: Disconnected.	Approximately 2.7V
93	O	Ignition switch	**[Ignition switch: OFF]**	0V
			[Ignition switch: ON]	BATTERY VOLTAGE (11 - 14V)
99	R	Stop lamp switch	**[Ignition switch: OFF]** ● Brake pedal: Fully released	Approximately 0V
			[Ignition switch: OFF] ● Brake pedal: Slightly depressed	BATTERY VOLTAGE (11 - 14V)
102	BR	Sensor power supply (Accelerator pedal position sensor 2)	**[Ignition switch: ON]**	Approximately 5V
103	G	Accelerator pedal position sensor 2	**[Ignition switch: ON]** ● Engine stopped ● Accelerator pedal: Fully released	0.3 - 0.6V
			[Ignition switch: ON] ● Engine stopped ● Accelerator pedal: Fully depressed	1.95 - 2.4V
104	B	Sensor ground (Accelerator pedal position sensor 2)	**[Engine is running]** ● **Warm-up condition** ● Idle speed	Approximately 0V
105	G	Power supply for ECM	**[Ignition switch: ON]**	BATTERY VOLTAGE (11 - 14V)
106	O	Sensor power supply (Accelerator pedal position sensor 1)	**[Ignition switch: ON]**	Approximately 5V
108	B	ECM ground	**[Engine is running]** ● Idle speed	Body ground

TERMI-NAL NO.	WIRE COLOR	ITEM	CONDITION	DATA (DC Voltage)
110	W	Accelerator pedal position sensor 1	**[Ignition switch: ON]** ● Engine stopped ● Accelerator pedal: Fully released	0.6 - 0.9V
			[Ignition switch: ON] ● Engine stopped ● Accelerator pedal: Fully depressed	3.9 - 4.7V
111	B	Sensor ground (Accelerator pedal position sensor 1)	**[Engine is running]** ● **Warm-up condition** ● Idle speed	Approximately 0V

★: Average voltage for pulse signal (Actual pulse signal can be confirmed by oscilloscope.)

CONSULT-II Function (ENGINE)

BBS004L5

FUNCTION

Diagnostic test mode	Function
Work support	This mode enables a technician to adjust some devices faster and more accurately by following the indications on the CONSULT-II unit.
Self-diagnostic results	Self-diagnostic results such as 1st trip DTC, DTCs and 1st trip freeze frame data or freeze frame data can be read and erased quickly.*
Data monitor	Input/Output data in the ECM can be read.
Data monitor (SPEC)	Input/Output of the specification for Basic fuel schedule, AFM, A/F feedback control value and the other data monitor items can be read.
CAN diagnostic support monitor	The results of transmit/receive diagnosis of CAN communication can be read.
Active test	Diagnostic Test Mode in which CONSULT-II drives some actuators apart from the ECMs and also shifts some parameters in a specified range.
Function test	This mode is used to inform customers when their vehicle condition requires periodic maintenance.
ECM part number	ECM part number can be read.

*: The following emission-related diagnostic information is cleared when the ECM memory is erased.

- Diagnostic trouble codes
- 1st trip diagnostic trouble codes
- Freeze frame data
- 1st trip freeze frame data

ENGINE CONTROL COMPONENT PARTS/CONTROL SYSTEMS APPLICATION

Item			DIAGNOSTIC TEST MODE					
			WORK SUPPORT	SELF-DIAGNOSTIC RESULTS		DATA MONI-TOR	DATA MONI-TOR (SPEC)	ACTIVE TEST
				DTC*1	FREEZE FRAME DATA*2			
ENGINE CONTROL COMPONENT PARTS	INPUT	Crankshaft position sensor (POS)		×	×	×	×	
		Camshaft position sensor (PHASE)		×	×	×	×	
		Mass air flow sensor		×		×	×	
		Engine coolant temperature sensor		×	×	×	×	×
		Heated oxygen sensor 1		×		×	×	
		Heated oxygen sensor 2		×		×	×	
		Wheel sensor		×	×	×	×	
		Accelerator pedal position sensor		×		×	×	
		Throttle position sensor		×		×	×	
		Intake air temperature sensor		×	×	×	×	
		Knock sensor		×				
		EPS control unit				×	×	
		Refrigerant pressure sensor				×	×	
		Closed throttle position switch (accelerator pedal position sensor signal)				×	×	
		Air conditioner switch				×	×	
		Park/neutral position (PNP) switch		×		×	×	
		Stop lamp switch		×		×	×	
		Battery voltage				×	×	
		Load signal				×	×	

Item			DIAGNOSTIC TEST MODE					
			WORK SUPPORT	SELF-DIAGNOSTIC RESULTS		DATA MONI-TOR	DATA MONI-TOR (SPEC)	ACTIVE TEST
				DTC*1	FREEZE FRAME DATA*2			
ENGINE CONTROL COMPONENT PARTS	OUTPUT	Fuel injector				×	×	×
		Power transistor (Ignition timing)				×	×	×
		Throttle control motor relay		×		×	×	
		Throttle control motor		×				
		EVAP canister purge volume control sole-noid valve		×		×	×	×
		Air conditioner relay				×	×	
		Fuel pump relay	×			×	×	×
		Cooling fan relay		×		×	×	×
		Heated oxygen sensor 1 heater		×		×	×	
		Heated oxygen sensor 2 heater		×		×	×	
		Intake valve timing control solenoid valve		×		×	×	×

X: Applicable
*1: This item includes 1st trip DTCs.
*2: This mode includes 1st trip freeze frame data or freeze frame data. The items appear on CONSULT-II screen in freeze frame data mode only if a 1st trip DTC or DTC is detected. For details, refer to EC-1266 .

INSPECTION PROCEDURE

Refer to GI-36, "CONSULT-II Start Procedure" .

WORK SUPPORT MODE

Work Item

WORK ITEM	CONDITION	USAGE
FUEL PRESSURE RELEASE	● FUEL PUMP WILL STOP BY TOUCHING “START” DUR-ING IDLING. CRANK A FEW TIMES AFTER ENGINE STALLS.	When releasing fuel pressure from fuel line
IDLE AIR VOL LEARN	● THE IDLE AIR VOLUME THAT KEEPS THE ENGINE WITHIN THE SPECIFIED RANGE IS MEMORIZED IN ECM.	When learning the idle air volume
SELF-LEARNING CONT	● THE COEFFICIENT OF SELF-LEARNING CONTROL MIXTURE RATIO RETURNS TO THE ORIGINAL COEF-FICIENT.	When clearing the coefficient of self-learning control value
TARGET IDLE RPM ADJ*	● IDLE CONDITION	When setting target idle speed
TARGET IGN TIM ADJ*	● IDLE CONDITION	When adjusting target ignition tim-ing

*: This function is not necessary in the usual service procedure.

SELF-DIAG RESULTS MODE

Self Diagnostic Item

Regarding items of DTC and 1st trip DTC, refer to EC-1264, "EMISSION-RELATED DIAGNOSTIC INFORMA-TION ITEMS" .

Freeze Frame Data and 1st Trip Freeze Frame Data

Freeze frame data item*	Description
DIAG TROUBLE CODE [PXXXX]	● The engine control component part/control system has a trouble code, it is displayed as PXXXX. (Refer to EC-1239, "INDEX FOR DTC" .)
FUEL SYS-B1	● "Fuel injection system status" at the moment a malfunction is detected is displayed. ● One mode in the following is displayed. Mode2: Open loop due to detected system malfunction Mode3: Open loop due to driving conditions (power enrichment, deceleration enleanment) Mode4: Closed loop - using oxygen sensor(s) as feedback for fuel control Mode5: Open loop - has not yet satisfied condition to go to closed loop
CAL/LD VALUE [%]	● The calculated load value at the moment a malfunction is detected is displayed.
COOLANT TEMP [°C] or [°F]	● The engine coolant temperature at the moment a malfunction is detected is displayed.
L-FUEL TRM-B1 [%]	● "Long-term fuel trim" at the moment a malfunction is detected is displayed. ● The long-term fuel trim indicates much more gradual feedback compensation to the base fuel schedule than short-term fuel trim.
S-FUEL TRM-B1 [%]	● "Short-term fuel trim" at the moment a malfunction is detected is displayed. ● The short-term fuel trim indicates dynamic or instantaneous feedback compensation to the base fuel schedule.
ENGINE SPEED [rpm]	● The engine speed at the moment a malfunction is detected is displayed.
VEHICL SPEED [km/h] or [mph]	● The vehicle speed at the moment a malfunction is detected is displayed.
B/FUEL SCHDL [msec]	● The base fuel schedule at the moment a malfunction is detected is displayed.
INT/A TEMP SE [°C] or [°F]	● The intake air temperature at the moment a malfunction is detected is displayed.

*: The items are the same as those of 1st trip freeze frame data.

DATA MONITOR MODE

Monitored Item

×: Applicable

Monitored item [Unit]	ECM INPUT SIGNALS	MAIN SIG-NALS	Description	Remarks
ENG SPEED [rpm]	×	×	● Indicates the engine speed computed from the signals of the crankshaft position sensor (POS) and camshaft position sensor (PHASE).	● Accuracy becomes poor if engine speed drops below the idle rpm. ● If the signal is interrupted while the engine is running, an abnormal value may be indicated.
MAS A/F SE-B1 [V]	×	×	● The signal voltage of the mass air flow sensor is displayed.	● When the engine is stopped, a certain value is indicated.
B/FUEL SCHDL [msec]		×	● "Base fuel schedule" indicates the fuel injection pulse width programmed into ECM, prior to any learned on board correction.	
A/F ALPHA-B1 [%]		×	● The mean value of the air-fuel ratio feedback correction factor per cycle is indicated.	● When the engine is stopped, a certain value is indicated. ● This data also includes the data for the air-fuel ratio learning control.

Monitored item [Unit]	ECM INPUT SIGNALS	MAIN SIG-NALS	Description	Remarks
COOLAN TEMP/S [°C] or [°F]	×	×	● The engine coolant temperature (determined by the signal voltage of the engine coolant temperature sensor) is displayed.	● When the engine coolant temperature sensor is open or short-circuited, ECM enters fail-safe mode. The engine coolant temperature determined by the ECM is displayed.
HO2S1 (B1) [V]	×	×	● The signal voltage of the heated oxygen sensor 1 is displayed.	
HO2S2 (B1) [V]	×		● The signal voltage of the heated oxygen sensor 2 is displayed.	
HO2S1 MNTR (B1) [RICH/LEAN]	×	×	● Display of heated oxygen sensor 1 signal during air-fuel ratio feedback control: RICH: means the mixture became “rich”, and control is being affected toward a leaner mixture. LEAN: means the mixture became “lean”, and control is being affected toward a rich mixture.	● After turning ON the ignition switch, “RICH” is displayed until air-fuel mixture ratio feedback control begins. ● When the air-fuel ratio feedback is clamped, the value just before the clamping is displayed continuously.
HO2S2 MNTR (B1) [RICH/LEAN]	×		● Display of heated oxygen sensor 2 signal: RICH: means the amount of oxygen after three way catalyst is relatively small. LEAN: means the amount of oxygen after three way catalyst is relatively large.	● When the engine is stopped, a certain value is indicated.
VHCL SPEED SE [km/h] or [mph]	×	×	● The vehicle speed computed from the vehicle speed signal is displayed.	
BATTERY VOLT [V]	×	×	● The power supply voltage of ECM is displayed.	
ACCEL SEN 1 [V]	×	×	● The accelerator pedal position sensor signal voltage is displayed.	● ACCEL SEN 2 signal is converted by ECM internally. Thus, it differs from ECM terminal voltage signal.
ACCEL SEN 2 [V]	×			
THRTL SEN 1 [V]	×	×	● The throttle position sensor signal voltage is displayed.	● THRTL SEN 2 signal is converted by ECM internally. Thus, it differs from ECM terminal voltage signal.
THRTL SEN 2 [V]	×			
INT/A TEMP SE [°C] or [°F]	×	×	● The intake air temperature (determined by the signal voltage of the intake air temperature sensor) is indicated.	
START SIGNAL [ON/OFF]	×	×	● Indicates start signal status [ON/OFF] computed by the ECM according to the signals of engine speed and battery voltage.	● After starting the engine, [OFF] is displayed regardless of the starter signal.
CLSD THL POS [ON/OFF]	×	×	● Indicates idle position [ON/OFF] computed by the ECM according to the accelerator pedal position sensor signal.	
AIR COND SIG [ON/OFF]	×	×	● Indicates [ON/OFF] condition of the air conditioner switch as determined by the air conditioner signal.	
P/N POSI SW [ON/OFF]	×	×	● Indicates [ON/OFF] condition from the park/neutral position (PNP) switch signal.	
PW/ST SIGNAL [ON/OFF]	×	×	● [ON/OFF] condition of the power steering system (determined by the signal sent from EPS control unit) is indicated.	

Monitored item [Unit]	ECM INPUT SIGNALS	MAIN SIG-NALS	Description	Remarks
LOAD SIGNAL [ON/OFF]	×	×	● Indicates [ON/OFF] condition from the electrical load signal. ON: Rear window defogger switch is ON and/or lighting switch is in 2nd position. OFF: Both rear window defogger switch and lighting switch are OFF.	
IGNITION SW [ON/OFF]	×		● Indicates [ON/OFF] condition from ignition switch.	
HEATER FAN SW [ON/OFF]	×		● Indicates [ON/OFF] condition from the heater fan switch signal.	
BRAKE SW [ON/OFF]	×		● Indicates [ON/OFF] condition from the stop lamp switch signal.	
INJ PULSE-B1 [msec]		×	● Indicates the actual fuel injection pulse width compensated by ECM according to the input signals.	● When the engine is stopped, a certain computed value is indicated.
IGN TIMING [BTDC]		×	● Indicates the ignition timing computed by ECM according to the input signals.	● When the engine is stopped, a certain value is indicated.
PURG VOL C/V [%]			● Indicates the EVAP canister purge volume control solenoid valve control value computed by the ECM according to the input signals. ● The opening becomes larger as the value increases.	
INT/V TIM (B1) [°CA]			● Indicates [°CA] of intake camshaft advanced angle.	
INT/V SOL (B1) [%]			● The control value of the intake valve timing control solenoid valve (determined by ECM according to the input signal) is indicated. ● The advance angle becomes larger as the value increases	
AIR COND RLY [ON/OFF]		×	● The air conditioner relay control condition (determined by ECM according to the input signals) is indicated.	
FUEL PUMP RLY [ON/OFF]		×	● Indicates the fuel pump relay control condition determined by ECM according to the input signals.	
THRTL RELAY [ON/OFF]		×	● Indicates the throttle control motor relay control condition determined by the ECM according to the input signals.	
COOLING FAN [HI/LOW/OFF]			● Indicates the condition of the cooling fan (determined by ECM according to the input signals). HI: High speed operation LOW: Low speed operation OFF: Stop	
HO2S1 HTR (B1) [ON/OFF]			● Indicates [ON/OFF] condition of heated oxygen sensor 1 heater determined by ECM according to the input signals.	
HO2S2 HTR (B1) [ON/OFF]			● Indicates [ON/OFF] condition of heated oxygen sensor 2 heater determined by ECM according to the input signals.	

Monitored item [Unit]	ECM INPUT SIGNALS	MAIN SIG-NALS	Description	Remarks
IDL A/V LEARN [YET/CMPLT]			● Display the condition of idle air volume learning YET: Idle Air Volume Learning has not been performed yet. CMPLT: Idle Air Volume Learning has already been performed successfully.	
O2SEN HTR DTY [%]			● Indicates the heated oxygen sensor 1 heater control value computed by the ECM according to the input signals.	
I/P PULLY SPD [km/h] or [MPH]	×		● Indicates the engine speed computed from the furbine revolution sensor signal.	
AC PRESS SEN [V]	×		● The signal voltage from the refrigerant pressure sensor is displayed.	
Voltage [V]			● Voltage, frequency, duty cycle or pulse width measured by the probe.	● Only "#" is displayed if item is unable to be measured. ● Figures with "#"s are temporary ones. They are the same figures as an actual piece of data which was just previously measured.
Frequency [msec], [Hz] or [%]				
DUTY-HI				
DUTY-LOW				
PLS WIDTH-HI				
PLS WIDTH-LOW				

NOTE:
Any monitored item that does not match the vehicle being diagnosed is deleted from the display automatically.

DATA MONITOR (SPEC) MODE

Monitored Item

Monitored item [Unit]	ECM INPUT SIG-NALS	MAIN SIG-NALS	Description	Remarks
ENG SPEED [rpm]	×	×	● Indicates the engine speed computed from the signal of the crankshaft position sensor (POS) and camshaft position sensor (PHASE).	
MAS A/F SE-B1 [V]	×	×	● The signal voltage of the mass air flow sensor specification is displayed.	● When engine is running specification range is indicated.
B/FUEL SCHDL [msec]		×	● "Base fuel schedule" indicates the fuel injection pulse width programmed into ECM, prior to any learned on board correction.	● When engine is running specification range is indicated.
A/F ALPHA-B1 [%]		×	● The mean value of the air-fuel ratio feedback correction factor per cycle is indicated.	● When engine is running specification range is indicated. ● This data also includes the data for the air-fuel ratio learning control.

NOTE:
Any monitored item that does not match the vehicle being diagnosed is deleted from the display automatically.

ACTIVE TEST MODE

Test Item

TEST ITEM	CONDITION	JUDGEMENT	CHECK ITEM (REMEDY)
FUEL INJECTION	● Engine: Return to the original trouble condition ● Change the amount of fuel injection using CONSULT-II.	If trouble symptom disappears, see CHECK ITEM.	● Harness and connectors ● Fuel injector ● Air fuel ratio (A/F) sensor 1
IGNITION TIMING	● Engine: Return to the original trouble condition ● Timing light: Set ● Retard the ignition timing using CONSULT-II.	If trouble symptom disappears, see CHECK ITEM.	● Perform Idle Air Volume Learning.
POWER BALANCE	● Engine: After warming up, idle the engine. ● A/C switch OFF ● Shift lever: P or N (A/T), Neutral (M/T) ● Cut off each fuel injector signal one at a time using CONSULT-II.	Engine runs rough or dies.	● Harness and connectors ● Compression ● Fuel injector ● Power transistor ● Spark plug ● Ignition coil
COOLING FAN*1 , *2 , *3	● Ignition switch: ON ● Turn the cooling fan “LOW”, “MID”, “HI” and “OFF” with CONSULT-II.	Cooling fan moves and stops.	● Harness and connectors ● Cooling fan relay ● Cooling fan motor
ENG COOLANT TEMP	● Engine: Return to the original trouble condition ● Change the engine coolant temperature using CONSULT-II.	If trouble symptom disappears, see CHECK ITEM.	● Harness and connectors ● Engine coolant temperature sensor ● Fuel injector
FUEL PUMP RELAY	● Ignition switch: ON (Engine stopped) ● Turn the fuel pump relay ON and OFF using CONSULT-II and listen to operating sound.	Fuel pump relay makes the operating sound.	● Harness and connectors ● Fuel pump relay
PURG VOL CONT/V	● Engine: After warming up, run engine at 1,500 rpm. ● Change the EVAP canister purge volume control solenoid valve opening percent using CONSULT-II.	Engine speed changes according to the opening percent.	● Harness and connectors ● Solenoid valve
V/T ASSIGN ANGLE	● Engine: Return to the original trouble condition ● Change intake valve timing using CONSULT-II.	If trouble symptom disappears, see CHECK ITEM.	● Harness and connectors ● Intake valve timing control solenoid valve

*1: Leaving cooling fan OFF with CONSULT-II while engine is running may cause the engine to overheat.
*2: With A/C: “OFF”, “LOW”, “MID” or “HI” is displayed on CONSULT-II screen. But cooling fan operates at the same speed when “MID” or “HI” is displayed.
*3: Without A/C: “OFF”, “LOW”, “MID” or “HI” is displayed on CONSULT-II screen. But cooling fan operates at the same speed when an item other than “OFF” is displayed.

REAL TIME DIAGNOSIS IN DATA MONITOR MODE (RECORDING VEHICLE DATA)

Description

CONSULT-II has two kinds of triggers and they can be selected by touching “SETTING” in “DATA MONITOR” mode.

1. “AUTO TRIG” (Automatic trigger):
   - The malfunction will be identified on the CONSULT-II screen in real time.
     In other words, DTC/1st trip DTC and malfunction item will be displayed if the malfunction is detected by ECM.
     At the moment a malfunction is detected by ECM, “MONITOR” in “DATA MONITOR” screen is changed to “Recording Data ... xx%” as shown at right, and the data after the malfunction detection is recorded. Then when the percentage reached 100%, “REAL-TIME DIAG” screen is displayed. If “STOP” is touched on the screen during “Recording Data ... xx%”, “REAL-TIME DIAG” screen is also displayed.
     The recording time after the malfunction detection and the recording speed can be changed by “TRIGGER POINT” and “Recording Speed”. Refer to CONSULT-II OPERATION MANUAL.
2. “MANU TRIG” (Manual trigger):
   - DTC/1st trip DTC and malfunction item will not be displayed automatically on CONSULT-II screen even though a malfunction is detected by ECM.
     DATA MONITOR can be performed continuously even though a malfunction is detected.

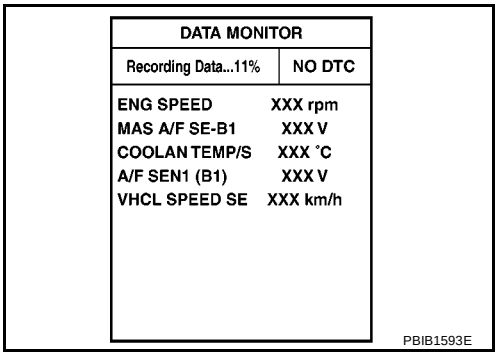

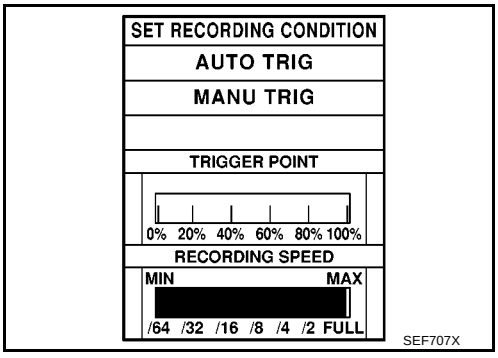

Operation

1. “AUTO TRIG”
   - While trying to detect the DTC/1st trip DTC by performing the “DTC Confirmation Procedure”, be sure to select to “DATA MONITOR (AUTO TRIG)” mode. You can confirm the malfunction at the moment it is detected.
   - While narrowing down the possible causes, CONSULT-II should be set in “DATA MONITOR (AUTO TRIG)” mode, especially in case the incident is intermittent.
     When you are inspecting the circuit by gently shaking (or twisting) the suspicious connectors, components and harness in the “DTC Confirmation Procedure”, the moment a malfunction is found the DTC/1st trip DTC will be displayed. (Refer to “INCIDENT SIMULATION TESTS” in GI-25, "How to Perform Efficient Diagnosis for an Electrical Incident" .)
2. “MANU TRIG”
   - If the malfunction is displayed as soon as “DATA MONITOR” is selected, reset CONSULT-II to “MANU TRIG”. By selecting “MANU TRIG” you can monitor and store the data. The data can be utilized for further diagnosis, such as a comparison with the value for the normal operating condition.

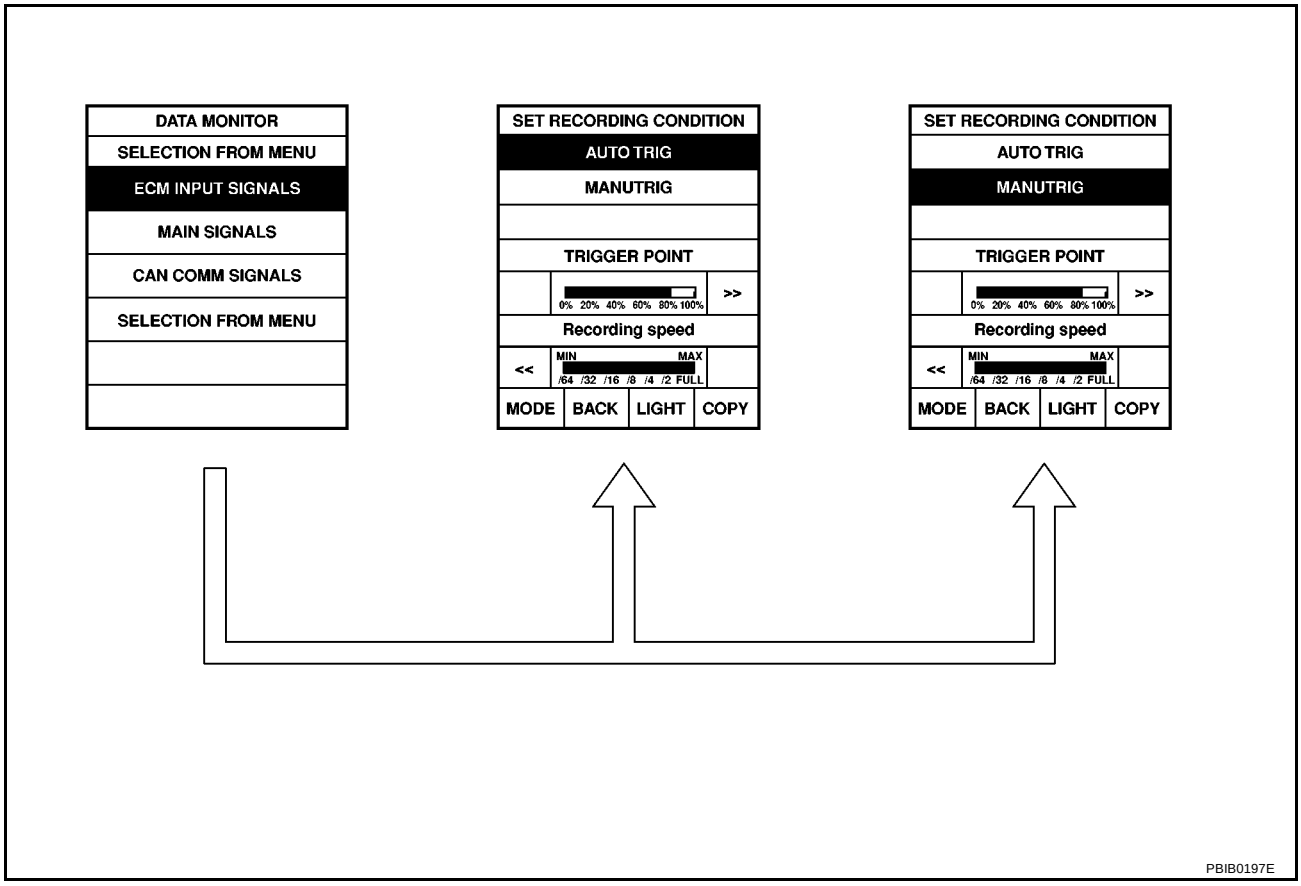

CONSULT-II Reference Value in Data Monitor

BBS004L6

Remarks:
- Specification data are reference values.
- Specification data are output/input values which are detected or supplied by the ECM at the connector.
  * Specification data may not be directly related to their components signals/values/operations.
  i.e. Adjust ignition timing with a timing light before monitoring IGN TIMING, because the monitor may show the specification data in spite of the ignition timing not being adjusted to the specification data. This IGN TIMING monitors the data calculated by the ECM according to the signals input from the camshaft position sensor and other ignition timing related sensors.

MONITOR ITEM	CONDITION		SPECIFICATION
ENG SPEED	● Run engine and compare CONSULT-II value with the tachometer indication.		Almost the same speed as the tachometer indication.
MAS A/F SE-B1	See EC-1326, "TROUBLE DIAGNOSIS - SPECIFICATION VALUE" .		
B/FUEL SCHDL	See EC-1326, "TROUBLE DIAGNOSIS - SPECIFICATION VALUE" .		
A/F ALPHA-B1	See EC-1326, "TROUBLE DIAGNOSIS - SPECIFICATION VALUE" .		
COOLAN TEMP/S	● Engine: After warming up		More than 70°C (158°F)
HO2S1 (B1)	● Engine: After warming up	Maintaining engine speed at 2,000 rpm	0 - 0.3V ←→ Approx. 0.6 - 1.0V
HO2S2 (B1)	● Revving engine from idle to 3,000 rpm quickly after the following conditions are met. – Engine: After warming up. – Keep the engine speed between 3,500 rpm and 4,000 rpm for 1 minute and idle for 1 minute under no load.		0 - 0.3V ←→ Approx. 0.6 - 1.0V
HO2S1 MNTR (B1)	● Engine: After warming up	Maintaining engine speed at 2,000 rpm	LEAN ←→ RICH Changes more than 5 times during 10 seconds.
HO2S2 MNTR (B1)	● Revving engine from idle to 3,000 rpm quickly after the following conditions are met. – Engine: After warming up. – Keep the engine speed between 3,500 rpm and 4,000 rpm for 1 minute and idle for 1 minute under no load.		LEAN ←→ RICH
VHCL SPEED SE	● Turn drive wheels and compare CONSULT-II value with the speedometer indication.		Almost the same speed as the speedometer indication.
BATTERY VOLT	● Ignition switch: ON (Engine stopped)		11 - 14V
ACCEL SEN 1	● Ignition switch: ON (Engine stopped)	Accelerator pedal: Fully released	0.6 - 0.9V
		Accelerator pedal: Fully depressed	4.0 - 4.8V
ACCEL SEN 2*1	● Ignition switch: ON (Engine stopped)	Accelerator pedal: Fully released	0.6 - 0.9V
		Accelerator pedal: Fully depressed	3.9 - 4.8V
THRTL SEN 1 THRTL SEN 2*1	● Ignition switch: ON (Engine stopped)	Accelerator pedal: Fully released	More than 0.36V
	● Shift lever: D (A/T), 1st (M/T)	Accelerator pedal: Fully depressed	Less than 4.75V
START SIGNAL	● Ignition switch: ON → START → ON		OFF → ON → OFF
CLSD THL POS	● Ignition switch: ON	Accelerator pedal: Fully released	ON
		Accelerator pedal: Slightly depressed	OFF
AIR COND SIG	● Engine: After warming up, idle the engine	Air conditioner switch: OFF	OFF
		Air conditioner switch: ON (Compressor operates.)	ON
P/N POSI SW	● Ignition switch: ON	Shift lever: P or N (A/T), Neutral (M/T)	ON
		Shift lever: Except above	OFF
PW/ST SIGNAL	● Engine: After warming up, idle the engine	Steering wheel: Not being turned.	OFF
		Steering wheel: Being turned.	ON

MONITOR ITEM	CONDITION		SPECIFICATION
LOAD SIGNAL	● Ignition switch: ON	Rear window defogger switch: ON and/or Lighting switch: 2nd	ON
		Rear window defogger switch and lighting switch: OFF	OFF
IGNITION SW	● Ignition switch: ON → OFF → ON		ON → OFF → ON
HEATER FAN SW	● Ignition switch: ON	Heater fan: Operating.	ON
		Heater fan: Not operating	OFF
BRAKE SW	● Ignition switch: ON	Brake pedal: Fully released	OFF
		Brake pedal: Slightly depressed	ON
INJ PULSE-B1	● Engine: After warming up ● Air conditioner switch: OFF ● Shift lever: P or N (A/T), Neutral (M/T) ● No load	Idle	2.0 - 3.0 msec
		2,000 rpm	1.9 - 2.9 msec
IGN TIMING	● Engine: After warming up ● Air conditioner switch: OFF ● Shift lever: P or N (A/T), Neutral (M/T) ● No load	Idle	1° - 11° BTDC
		2,000 rpm	25° - 45° BTDC
PURG VOL C/V	● Engine: After warming up ● Air conditioner switch: OFF ● Shift lever: P or N (A/T), Neutral (M/T) ● No load	Idle	0%
		2,000 rpm	0 - 50%
INT/V TIM (B1)	● Engine: After warming up ● Air conditioner switch: OFF ● Shift lever: P or N (A/T), Neutral (M/T) ● No load	Idle	–5° - 5°CA
		2,500 rpm	Approx. 0° - 40°CA
INT/V SOL (B1)	● Engine: After warming up ● Air conditioner switch: OFF ● Shift lever: P or N (A/T), Neutral (M/T) ● No load	Idle	0% - 2%
		2,500 rpm	Approx. 0% - 90%
AIR COND RLY	● Engine: After warming up, idle the engine	Air conditioner switch: OFF	OFF
		Air conditioner switch: ON (Compressor operates)	ON
FUEL PUMP RLY	● For 1 second after turning ignition switch ON ● Engine running or cranking		ON
	● Except above conditions		OFF
THRTL RELAY	● Ignition switch: ON		ON
COOLING FAN	● Engine: After warming up, idle the engine ● Air conditioner switch: OFF	Engine coolant temperature is 94°C (201°F) or less	OFF
		Engine coolant temperature is between 95°C (203°F) and 99°C (210°F)	LOW*2
		Engine coolant temperature is 100°C (212°F) or more	HIGH*2

MONITOR ITEM	CONDITION	SPECIFICATION
HO2S1 HTR (B1)	● Engine: After warming up ● Engine speed: Below 3,600 rpm	ON
	● Engine speed: Above 3,600 rpm	OFF
HO2S2 HTR (B1)	● Below 3,600 rpm after the following conditions are met. – Engine: After warming up – Keeping the engine speed between 3,500 and 4,000 rpm for 1 minute and at idle for 1 minute under no load	ON
	● Engine speed: Above 3,600 rpm	OFF
I/P PULLY SPD	● Vehicle speed: More than 20 km/h (12 MPH)	Almost the same speed as the tachometer indication
O2SEN HTR DTY	● Engine coolant temperature when engine started: More than 80°C (176°F) ● Engine speed: below 3,600 rpm	Approx. 30%
AC PRESS SEN	● Engine: Idle ● Air conditioner switch: ON (Compressor operates)	1.0 - 4.0V

*1: Accelerator pedal position sensor 2 signal and throttle position sensor 2 signal are converted by ECM internally. Thus, they differ from ECM terminals voltage signal.
*2: Models without air conditioner, cooling fan operates only ON and OFF operation, but CONSULT-II display will change OFF, LOW and HI depends on engine coolant temperature.

Major Sensor Reference Graph in Data Monitor Mode

BBS004L7

The following are the major sensor reference graphs in “DATA MONITOR” mode.

CLSD THL POS, ACCEL SEN 1, THRTL SEN 1

Below is the data for “CLSD THL POS”, “ACCEL SEN 1” and “THRTL SEN 1” when depressing the accelerator pedal with the ignition switch ON and with shift lever in D position (A/T), 1st position (M/T).
The signal of “ACCEL SEN 1” and “THRTL SEN 1” should rise gradually without any intermittent drop or rise after “CLSD THL POS” is changed from “ON” to “OFF”.

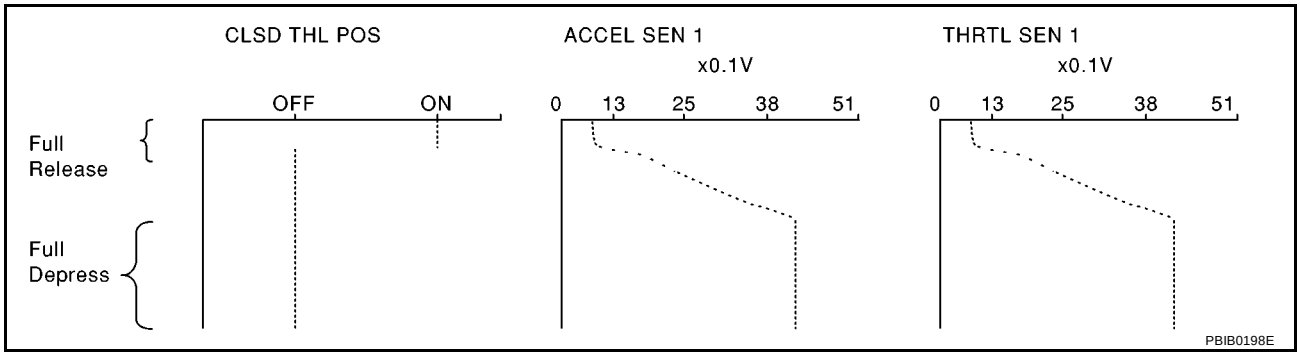

ENG SPEED, MAS A/F SE-B1, THRTL SEN 1, HO2S2 (B1), INJ PULSE-B1

Below is the data for “ENG SPEED”, “MAS A/F SE-B1”, “THRTL SEN 1”, “HO2S2 (B1)” and “INJ PULSE-B1” when revving engine quickly up to 4,800 rpm under no load after warming up engine sufficiently.
Each value is for reference, the exact value may vary.

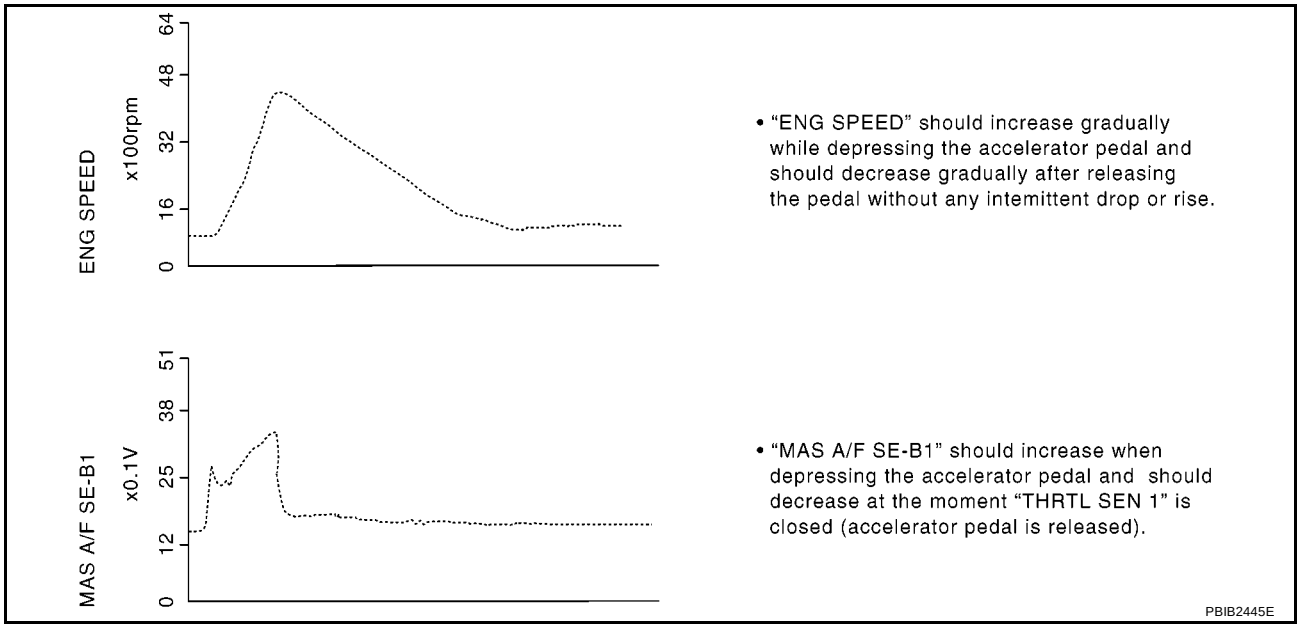

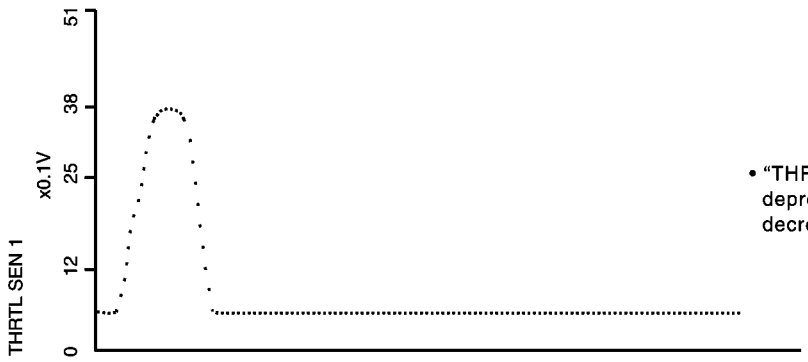

- "THRTL SEN 1" should increase while depressing the accelerator pedal and should decrease while releasing it.

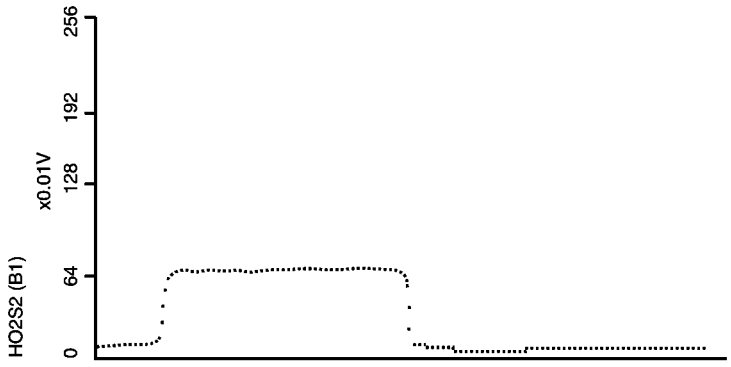

- "HO2S2 (B1)" may increase immediately after depressing the accelerator pedal and may decrease after releasing the pedal.

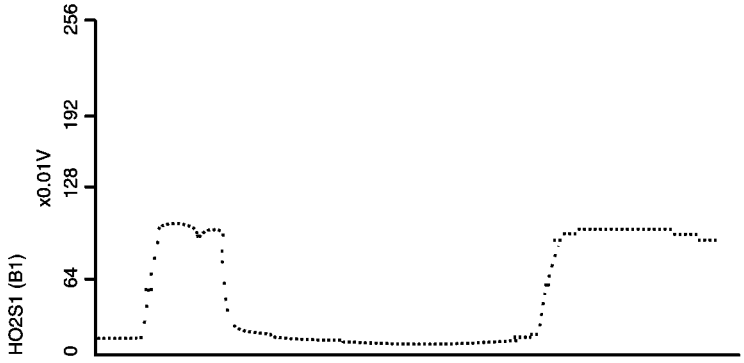

- "HO2S1 (B1)" may increase immediately after depressing the accelerator pedal and may decrease after releasing the pedal.

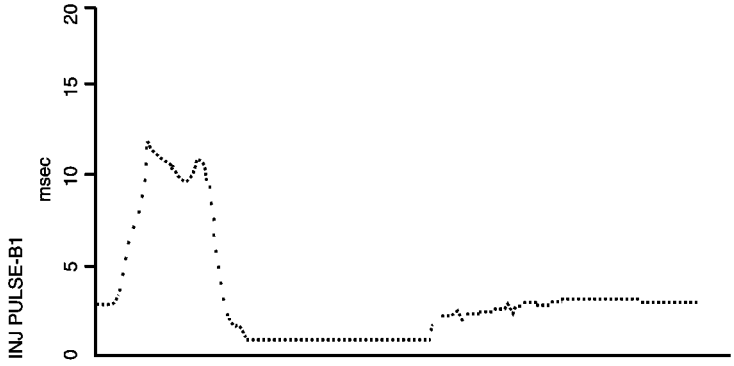

- "INJ PULSE-B1" should increase when depressing the accelerator pedal and should decrease when the pedal is released.

PBIB0668E

TROUBLE DIAGNOSIS - SPECIFICATION VALUE

PFP:00031

Description

BBS004L8

The specification (SP) value indicates the tolerance of the value that is displayed in “DATA MONITOR (SPEC)” mode of CONSULT-II during normal operation of the Engine Control System. When the value in “DATA MONITOR (SPEC)” mode is within the SP value, the Engine Control System is confirmed OK. When the value in “DATA MONITOR (SPEC)” mode is NOT within the SP value, the Engine Control System may have one or more malfunctions.
The SP value is used to detect malfunctions that may affect the Engine Control System, but will not light the MI.
The SP value will be displayed for the following three items:

- B/FUEL SCHDL (The fuel injection pulse width programmed into ECM prior to any learned on board correction)
- A/F ALPHA-B1 (The mean value of air-fuel ratio feedback correction factor per cycle)
- MAS A/F SE-B1 (The signal voltage of the mass air flow sensor)

Testing Condition

BBS004L9

- Vehicle driven distance: More than 5,000 km (3,107 miles)
- Barometric pressure: 98.3 - 104.3 kPa (0.983 - 1.043 bar, 1.003 - 1.064 kg/cm^2 , 14.25 - 15.12 psi)
- Atmospheric temperature: 20 - 30°C (68 - 86°F)
- Engine coolant temperature: 75 - 95°C (167 - 203°F)
- Engine speed: Idle
- Transmission: Warmed-up
  - A/T models: After the engine is warmed up to normal operating temperature, drive vehicle until “FLUID TEMP SE” (A/T fluid temperature sensor signal) indicates more than 60°C (140°F).
  - M/T models: After the engine is warmed up to normal operating temperature, drive vehicle for 5 minutes.
- Electrical load: Not applied
  - Rear window defogger switch, air conditioner switch, lighting switch are OFF. Steering wheel is straight ahead.

Inspection Procedure

BBS004LA

NOTE:
Perform “DATA MONITOR (SPEC)” mode in maximum scale display.

1. Perform EC-1272, "Basic Inspection" .
2. Confirm that the testing conditions indicated above are met.
3. Select “B/FUEL SCHDL”, “A/F ALPHA-B1” and “MAS A/F SE-B1” in “DATA MONITOR (SPEC)” mode with CONSULT-II.
4. Make sure that monitor items are within the SP value.
5. If NG, go to EC-1327, "Diagnostic Procedure" .

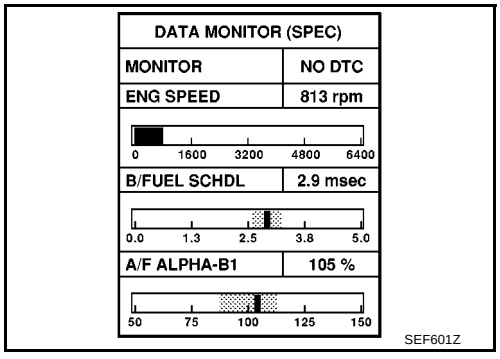

Diagnostic Procedure

BBS004LB

OVERALL SEQUENCE

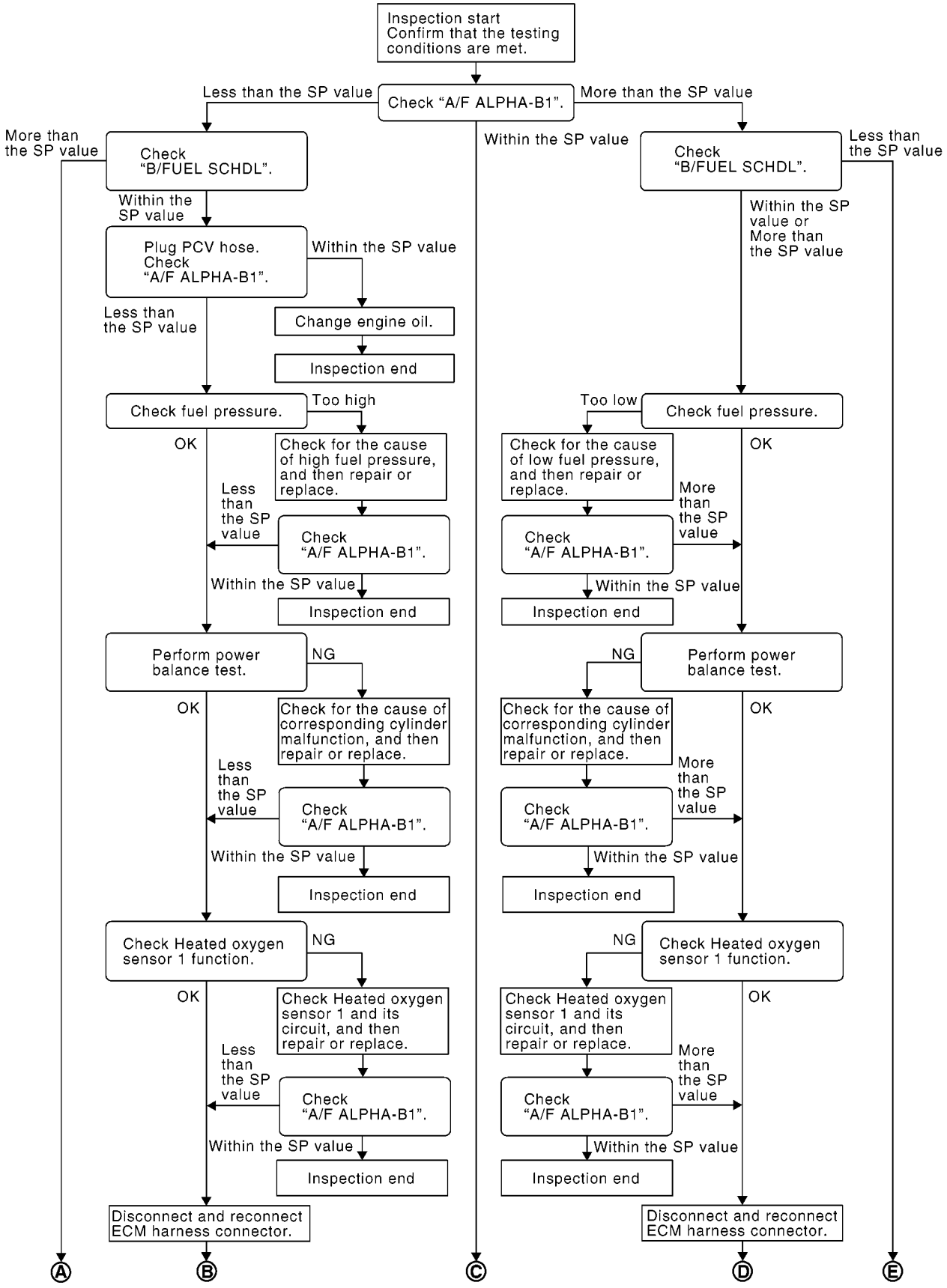

PBIB2384E

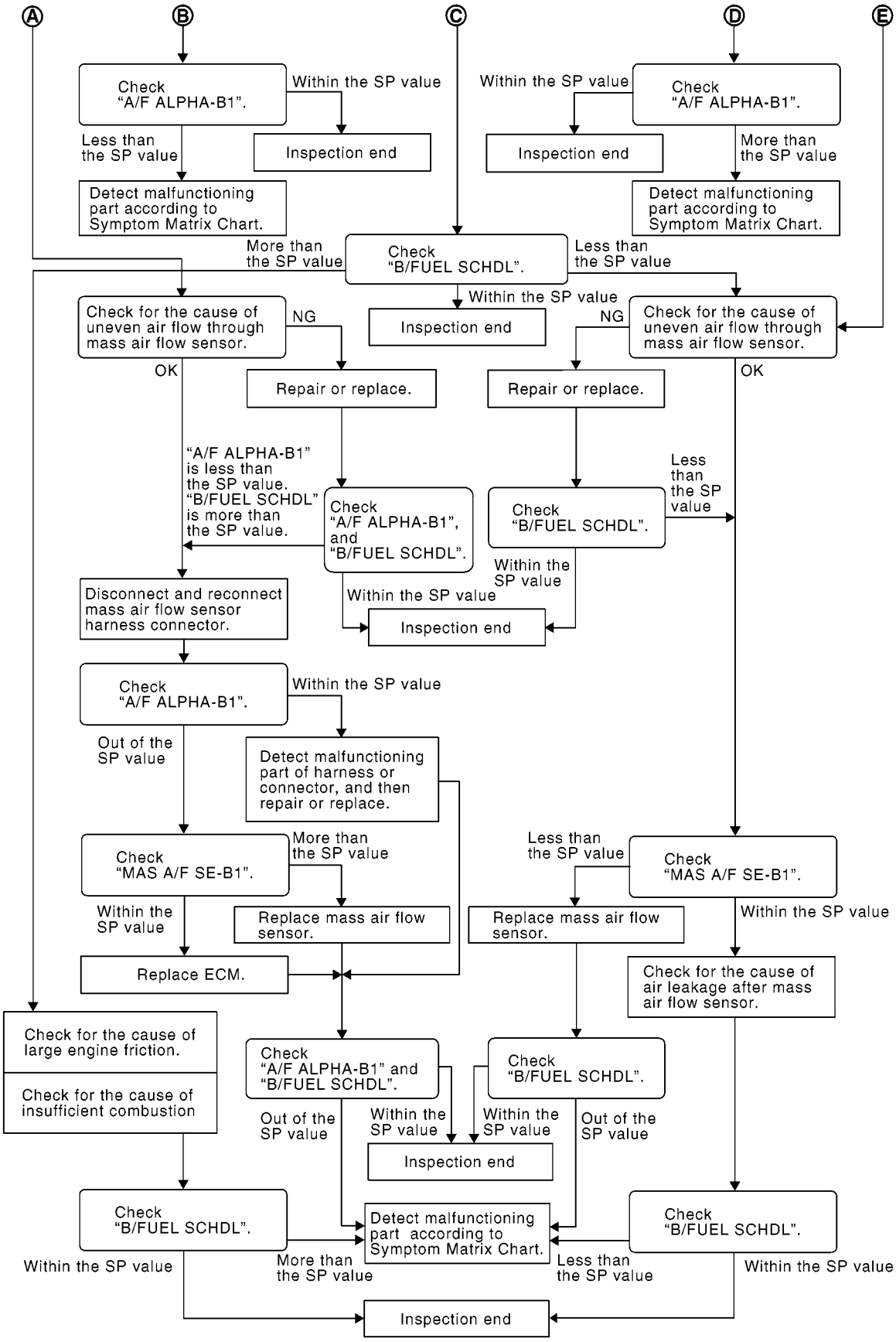
A
B
C
D
E
Check "A/F ALPHA-B1".
Within the SP value
Inspection end
Less than the SP value
Detect malfunctioning part according to Symptom Matrix Chart.
Check "A/F ALPHA-B1".
Within the SP value
Inspection end
More than the SP value
Detect malfunctioning part according to Symptom Matrix Chart.
More than the SP value
Check "B/FUEL SCHDL".
Less than the SP value
Within the SP value
Inspection end
Check for the cause of uneven air flow through mass air flow sensor.
NG
Repair or replace.
OK
Check for the cause of uneven air flow through mass air flow sensor.
NG
Repair or replace.
OK
"A/F ALPHA-B1" is less than the SP value. "B/FUEL SCHDL" is more than the SP value.
Check "A/F ALPHA-B1", and "B/FUEL SCHDL".
Check "B/FUEL SCHDL".
Less than the SP value
Within the SP value
Within the SP value
Inspection end
Disconnect and reconnect mass air flow sensor harness connector.
Check "A/F ALPHA-B1".
Within the SP value
Out of the SP value
Detect malfunctioning part of harness or connector, and then repair or replace.
Check "MAS A/F SE-B1".
More than the SP value
Within the SP value
Replace mass air flow sensor.
Replace ECM.
Less than the SP value
Check "MAS A/F SE-B1".
Replace mass air flow sensor.
Within the SP value
Check for the cause of air leakage after mass air flow sensor.
Check for the cause of large engine friction.
Check for the cause of insufficient combustion
Check "A/F ALPHA-B1" and "B/FUEL SCHDL".
Check "B/FUEL SCHDL".
Out of the SP value
Within the SP value
Within the SP value
Out of the SP value
Inspection end
Check "B/FUEL SCHDL".
Detect malfunctioning part according to Symptom Matrix Chart.
Check "B/FUEL SCHDL".
Within the SP value
More than the SP value
Less than the SP value
Within the SP value
Inspection end
PBIB3213E

DETAILED PROCEDURE

1. CHECK “A/F ALPHA-B1”

1. Start engine.
2. Confirm that the testing conditions are met. Refer to EC-1326, "Testing Condition" .
3. Select “A/F ALPHA-B1” in “DATA MONITOR (SPEC)” mode, and make sure that the each indication is within the SP value.

   NOTE:
   Check “A/F ALPHA-B1” for approximately 1 minute because they may fluctuate. It is NG if the indication is out of the SP value even a little.

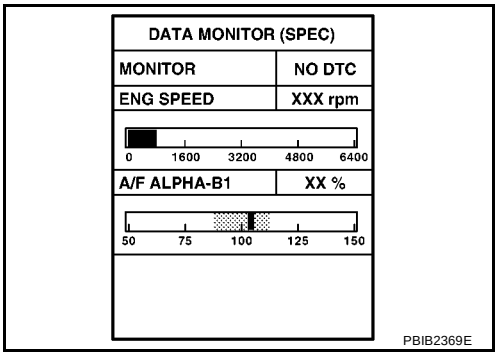

OK or NG

OK >> GO TO 17.
NG (Less than the SP value)>>GO TO 2.
NG (More than the SP value)>>GO TO 3.

2. CHECK “B/FUEL SCHDL”

Select “B/FUEL SCHDL” in “DATA MONITOR (SPEC)” mode, and make sure that the indication is within the SP value.

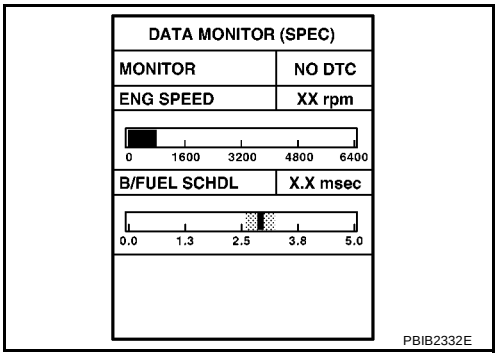

OK or NG

OK >> GO TO 4.
NG (More than the SP value)>>GO TO 19.

3. CHECK “B/FUEL SCHDL”

Select “B/FUEL SCHDL” in “DATA MONITOR (SPEC)” mode, and make sure that the indication is within the SP value.

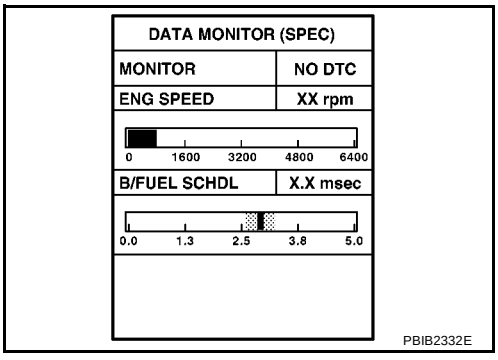

OK or NG

OK >> GO TO 6.
NG (More than the SP value)>>GO TO 6.
NG (Less than the SP value)>>GO TO 25.

4. CHECK “A/F ALPHA-B1”

1. Stop the engine.
2. Disconnect PCV hose, and then plug it.
3. Start engine.
4. Select “A/F ALPHA-B1” in “DATA MONITOR (SPEC)” mode, and make sure that the each indication is within the SP value.

OK or NG

OK >> GO TO 5.
NG >> GO TO 6.

5. CHANGE ENGINE OIL

1. Stop the engine.
2. Change engine oil.

NOTE:
This symptom may occur when a large amount of gasoline is mixed with engine oil because of driving conditions (such as when engine oil temperature does not rise enough since a journey distance is too short during winter). The symptom will not be detected after changing engine oil or changing driving condition.

>> **INSPECTION END**

6. CHECK FUEL PRESSURE

Check fuel pressure. (Refer to EC-1282, "FUEL PRESSURE CHECK" .)

OK or NG

OK >> GO TO 9.
NG (Fuel pressure is too high)>>Replace fuel pressure regulator, refer to EC-1282, "FUEL PRESSURE CHECK" . GO TO 8.
NG (Fuel pressure is too low)>>GO TO 7.

7. DETECT MALFUNCTIONING PART

1. Check the following.
- Clogged and bent fuel hose and fuel tube
- Clogged fuel filter
- Fuel pump and its circuit (Refer to EC-1543, "FUEL PUMP" .)
2. If NG, repair or replace the malfunctioning part. (Refer to EC-1282, "FUEL PRESSURE CHECK" .)
If OK, replace fuel pressure regulator.

>> GO TO 8.

8. CHECK “A/F ALPHA-B1”

1. Start engine.
2. Select “A/F ALPHA-B1” in “DATA MONITOR (SPEC)” mode, and make sure that the each indication is within the SP value.

OK or NG

OK >> **INSPECTION END**
NG >> GO TO 9.

9. PERFORM POWER BALANCE TEST

1. Perform “POWER BALANCE” in “ACTIVE TEST” mode.
2. Make sure that the each cylinder produces a momentary engine speed drop.

OK or NG

OK >> GO TO 12.
NG >> GO TO 10.

ACTIVE TEST	
POWER BALANCE	
MONITOR	
ENG SPEED	XXX rpm
MAS A/F SE-B1	XXX V

PBIB0133E

10. DETECT MALFUNCTIONING PART

1. Check the following.
- Ignition coil and its circuit (Refer to EC-1580, "IGNITION SIGNAL" .)
- Fuel injector and its circuit (Refer to EC-1537, "FUEL INJECTOR" .)
- Intake air leakage
- Low compression pressure (Refer to EM-173, "CHECKING COMPRESSION PRESSURE" .)
2. If NG, repair or replace the malfunctioning part.
If OK, replace fuel injector. (It may be caused by leakage from fuel injector or clogging.)

>> GO TO 11.

11. CHECK "A/F ALPHA-B1"

1. Start engine.
2. Select "A/F ALPHA-B1" in "DATA MONITOR (SPEC)" mode, and make sure that the each indication is within the SP value.

OK or NG

OK >> **INSPECTION END**
NG >> GO TO 12.

12. CHECK HEATED OXYGEN SENSOR 1 FUNCTION

1. Run engine at about 2,000 rpm for about 2 minutes under no load.
2. Select "HO2S1 MNTR (B1)", in "DATA MONITOR" mode.
3. Running engine at 2,000 rpm under no load (The engine is warmed up to normal operating temperature.), check that the monitor fluctuates between LEAN and RICH more than 5 times during 10 seconds.

1 time : RICH → LEAN → RICH

2 times : RICH → LEAN → RICH → LEAN → RICH

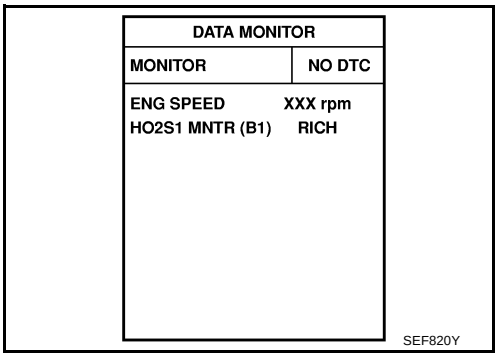

OK or NG

OK >> GO TO 15.
NG >> GO TO 13.

13. CHECK HEATED OXYGEN SENSOR 1 CIRCUIT

Check heated oxygen sensor 1 and its circuit. Refer to EC-1381, "DTC P0134 HO2S1" .

>> GO TO 14.

14. CHECK "A/F ALPHA-B1"

1. Start engine.
2. Select "A/F ALPHA-B1" in "DATA MONITOR (SPEC)" mode, and make sure that the each indication is within the SP value.

OK or NG

OK >> **INSPECTION END**
NG >> GO TO 15.

15. DISCONNECT AND RECONNECT ECM HARNESS CONNECTOR

1. Stop the engine.
2. Disconnect ECM harness connector. Check pin terminal and connector for damage, and then reconnect it.

>> GO TO 16.

16. CHECK “A/F ALPHA-B1”

1. Start engine.
2. Select “A/F ALPHA-B1” in “DATA MONITOR (SPEC)” mode, and make sure that the each indication is within the SP value.

OK or NG

OK >> **INSPECTION END**
NG >> Detect malfunctioning part according to EC-1292, "Symptom Matrix Chart"

17. CHECK “B/FUEL SCHDL”

Select “B/FUEL SCHDL” in “DATA MONITOR (SPEC)” mode, and make sure that the indication is within the SP value.

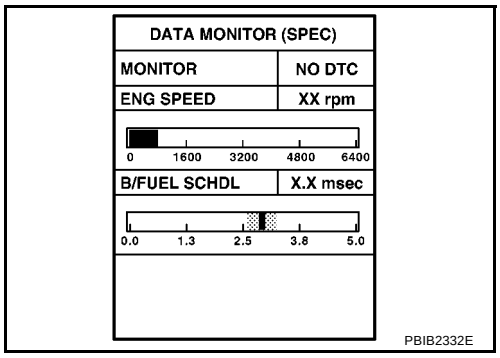

OK or NG

OK >> **INSPECTION END**
NG (More than the SP value)>>GO TO 18.
NG (Less than the SP value)>>GO TO 25.

18. DETECT MALFUNCTIONING PART

1. Check for the cause of large engine friction. Refer to the following.
- Engine oil level is too high
- Engine oil viscosity
- Belt tension of power steering, alternator, A/C compressor, etc. is excessive
- Noise from engine
- Noise from transmission, etc.
2. Check for the cause of insufficient combustion. Refer to the following.
- Valve clearance malfunction
- Intake valve timing control function malfunction
- Camshaft sprocket installation malfunction, etc.

>> Repair or replace malfunctioning part, and then GO TO 30.

19. CHECK INTAKE SYSTEM

Check for the cause of uneven air flow through mass air flow sensor. Refer to the following.

- Crushed air ducts
- Malfunctioning seal of air cleaner element
- Uneven dirt of air cleaner element
- Improper specification of intake air system

OK or NG

OK >> GO TO 21.
NG >> Repair or replace malfunctioning part, and then GO TO 20.

20. CHECK “A/F ALPHA-B1” AND “B/FUEL SCHDL”

Select “A/F ALPHA-B1” and “B/FUEL SCHDL” in “DATA MONITOR (SPEC)” mode, and make sure that the each indication is within the SP value.

OK or NG

OK >> **INSPECTION END**
NG (“B/FUEL SCHDL” is more, “A/F ALPHA-B1” is less than the SP value)>>GO TO 21.

21. DISCONNECT AND RECONNECT MASS AIR FLOW SENSOR HARNESS CONNECTOR

1. Stop the engine.
2. Disconnect mass air flow sensor harness connector. Check pin terminal and connector for damage and then reconnect it again.

>> GO TO 22.

22. CHECK “A/F ALPHA-B1”

1. Start engine.
2. Select “A/F ALPHA-B1” in “DATA MONITOR (SPEC)” mode, and make sure that the each indication is within the SP value.

OK or NG

OK >> 1. Detect malfunctioning part of mass air flow sensor circuit and repair it. Refer to EC-1354, "DTC P0102, P0103 MAF SENSOR" .
2. GO TO 29.

NG >> GO TO 23.

23. CHECK “MAS A/F SE-B1”

Select “MAS A/F SE-B1” in “DATA MONITOR (SPEC)” mode, and make sure that the indication is within the SP value.

OK or NG

OK >> GO TO 24.
NG (More than the SP value)>>Replace mass air flow sensor, and then GO TO 29.

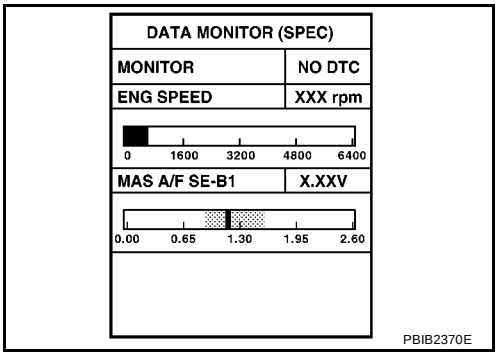

24. REPLACE ECM

1. Replace ECM.
2. Perform initialization of NATS system and registration of all NATS ignition key IDs. Refer to BL-218, "ECM Re-communicating Function" .
3. Perform EC-1278, "Accelerator Pedal Released Position Learning" .
4. Perform EC-1279, "Throttle Valve Closed Position Learning" .
5. Perform EC-1279, "Idle Air Volume Learning" .

>> GO TO 29.

25. CHECK INTAKE SYSTEM

Check for the cause of uneven air flow through mass air flow sensor. Refer to the following.

- Crushed air ducts
- Malfunctioning seal of air cleaner element
- Uneven dirt of air cleaner element
- Improper specification of intake air system

OK or NG

OK >> GO TO 27.
NG >> Repair or replace malfunctioning part, and then GO TO 26.

26. CHECK “B/FUEL SCHDL”

Select “B/FUEL SCHDL” in “DATA MONITOR (SPEC)” mode, and make sure that the indication is within the SP value.

OK or NG

OK >> **INSPECTION END**
NG (Less than the SP value)>>GO TO 27.

27. CHECK “MAS A/F SE-B1”

Select “MAS A/F SE-B1” in “DATA MONITOR (SPEC)” mode, and make sure that the indication is within the SP value.

OK or NG

OK >> GO TO 28.
NG (Less than the SP value)>>Replace mass air flow sensor, and then GO TO 30.

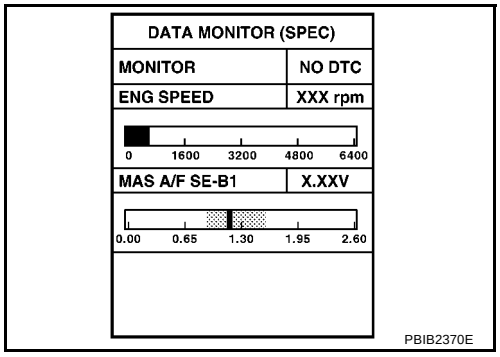

28. CHECK INTAKE SYSTEM

Check for the cause of air leak after the mass air flow sensor. Refer to the following.

- Disconnection, looseness, and cracks in air duct
- Looseness of oil filler cap
- Disconnection of oil level gauge
- Open stuck, breakage, hose disconnection, or cracks of PCV valve
- Disconnection or cracks of EVAP purge hose, open stuck of EVAP canister purge volume control solenoid valve
- Malfunctioning seal of rocker cover gasket
- Disconnection, looseness, or cracks of hoses, such as vacuum hose, connecting to intake air system parts
- Malfunctioning seal of intake air system, etc.

>> GO TO 30.

29. CHECK “A/F ALPHA-B1” AND “B/FUEL SCHDL”

Select “A/F ALPHA-B1” and “B/FUEL SCHDL” in “DATA MONITOR (SPEC)” mode, and make sure that the each indication is within the SP value.

OK or NG

OK >> **INSPECTION END**
NG >> Detect malfunctioning part according to EC-1292, "Symptom Matrix Chart" .

30. CHECK “B/FUEL SCHDL”

Select “B/FUEL SCHDL” in “DATA MONITOR (SPEC)” mode, and then make sure that the indication is within the SP value.

OK or NG

OK >> **INSPECTION END**
NG >> Detect malfunctioning part according to EC-1292, "Symptom Matrix Chart" .

TROUBLE DIAGNOSIS FOR INTERMITTENT INCIDENT

PFP:00006

Description

BBS004LC

Intermittent incidents may occur. In many cases, the malfunction resolves itself (the part or circuit function returns to normal without intervention). It is important to realize that the symptoms described in the customer's complaint often do not recur on (1st trip) DTC visits. Realize also that the most frequent cause of intermittent incidents occurrences is poor electrical connections. Because of this, the conditions under which the incident occurred may not be clear. Therefore, circuit checks made as part of the standard diagnostic procedure may not indicate the specific malfunctioning area.

Common Intermittent Incidents Report Situations

STEP in Work Flow	Situation
2	The CONSULT-II is used. The SELF-DIAG RESULTS screen shows time data other than [0] or [1t].
3 or 4	The symptom described by the customer does not recur.
5	(1st trip) DTC does not appear during the DTC Confirmation Procedure.
10	The Diagnostic Procedure for PXXXX does not indicate the malfunctioning area.

Diagnostic Procedure

BBS004LD

1. INSPECTION START

Erase (1st trip) DTCs. Refer to EC-1267, "HOW TO ERASE EMISSION-RELATED DIAGNOSTIC INFORMATION" .

>> GO TO 2.

2. CHECK GROUND TERMINALS

Check ground terminals for corroding or loose connection.
Refer to EC-1342, "Ground Inspection" .

OK or NG

OK >> GO TO 3.
NG >> Repair or replace.

3. SEARCH FOR ELECTRICAL INCIDENT

Perform GI-25, "How to Perform Efficient Diagnosis for an Electrical Incident" , “INCIDENT SIMULATION TESTS”.

OK or NG

OK >> **INSPECTION END**
NG >> Repair or replace.

POWER SUPPLY AND GROUND CIRCUIT

PFP:24110

Wiring Diagram

BBS004LE

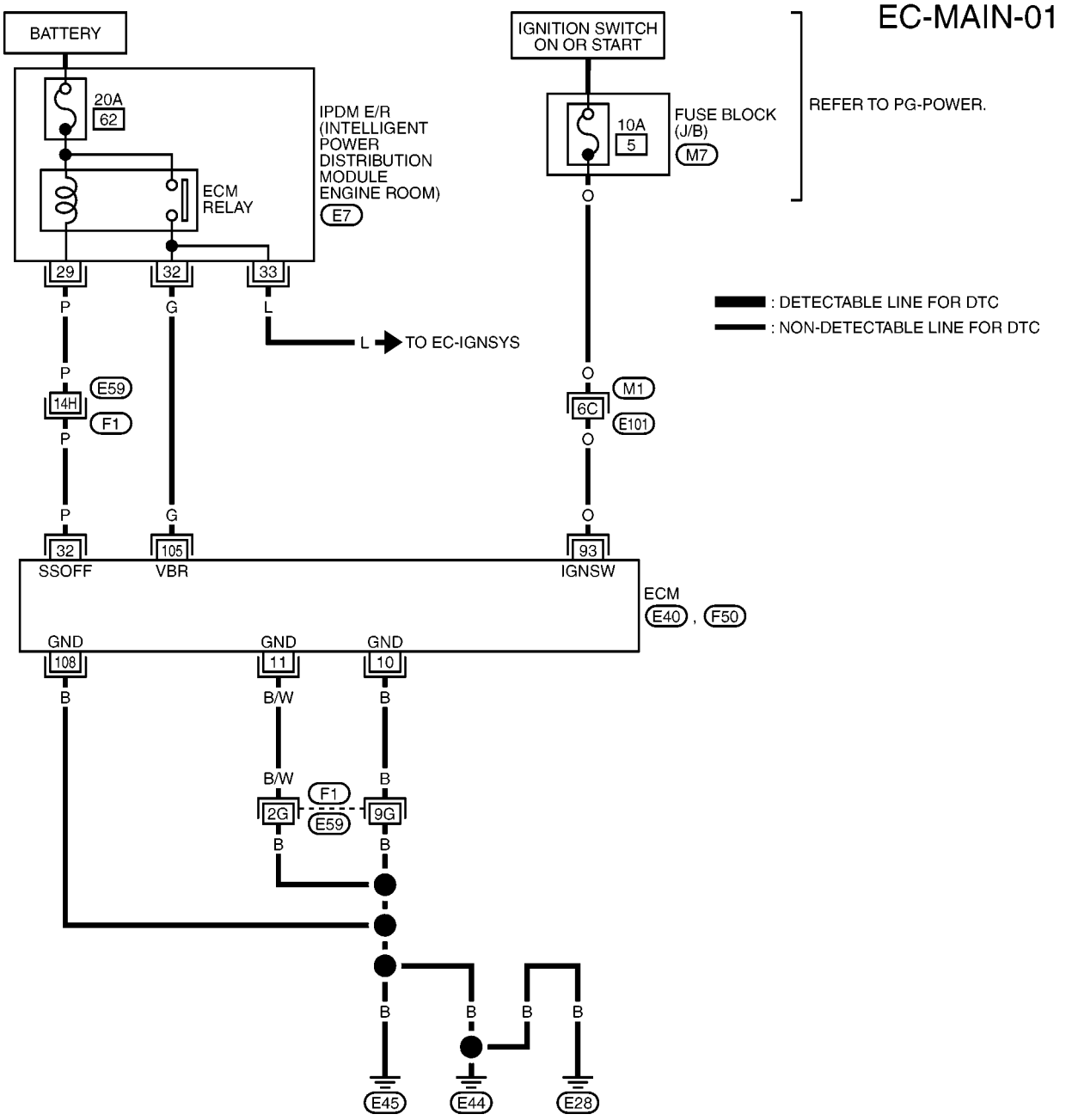

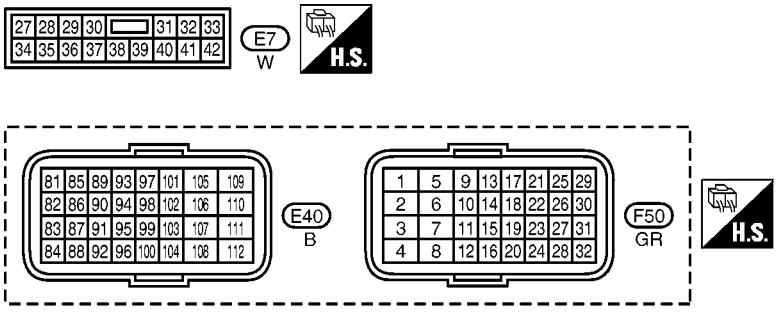

REFER TO THE FOLLOWING.
M1 , F1 - SUPER MULTIPLE JUNCTION (SMJ)
M7 - FUSE BLOCK - JUNCTION BOX (J/B)

MBWA1455E

Specification data are reference values and are measured between each terminal and ground.

CAUTION:

Do not use ECM ground terminals when measuring input/output voltage. Doing so may result in damage to the ECM's transistor. Use a ground other than ECM terminals, such as the ground.

TERMINAL NO.	WIRE COLOR	ITEM	CONDITION	DATA (DC Voltage)
10 11	B B/W	ECM ground	**[Engine is running]** ● Idle speed	Body ground
32	P	ECM relay (Self shut-off)	**[Engine is running]** **[Ignition switch: OFF]** ● For a few seconds after turning ignition switch OFF	0 - 1.0V
			[Ignition switch: OFF] ● More than a few seconds after turning ignition switch OFF	BATTERY VOLTAGE (11 - 14V)
93	O	Ignition switch	**[Ignition switch: OFF]**	0V
			[Ignition switch: ON]	BATTERY VOLTAGE (11 - 14V)
105	G	Power supply for ECM	**[Ignition switch: ON]**	BATTERY VOLTAGE (11 - 14V)
108	B	ECM ground	**[Engine is running]** ● Idle speed	Body ground

Diagnostic Procedure

BBS004LF

1. INSPECTION START

Start engine.

Is engine running?

Yes or No

Yes >> GO TO 8.
No >> GO TO 2.

2. CHECK ECM POWER SUPPLY CIRCUIT-I

1. Turn ignition switch OFF and then ON.
2. Check voltage between ECM terminal 93 and ground with CONSULT-II or tester.

Voltage: Battery voltage

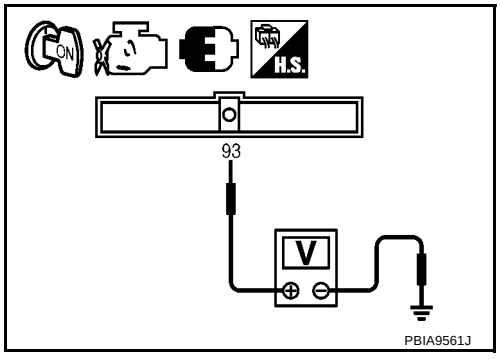

OK or NG

OK >> GO TO 4.
NG >> GO TO 3.

3. DETECT MALFUNCTIONING PART

Check the following.

- Harness connectors M1, E101
- Fuse block (J/B) connector M7
- 10A fuse
- Harness for open or short between ECM and fuse

>> Repair open circuit or short to ground or short to power in harness or connectors.

4. CHECK GROUND CONNECTIONS-1

1. Turn ignition switch OFF.
2. Loosen and retighten ground screws on the body.
   Refer to EC-1342, "Ground Inspection" .

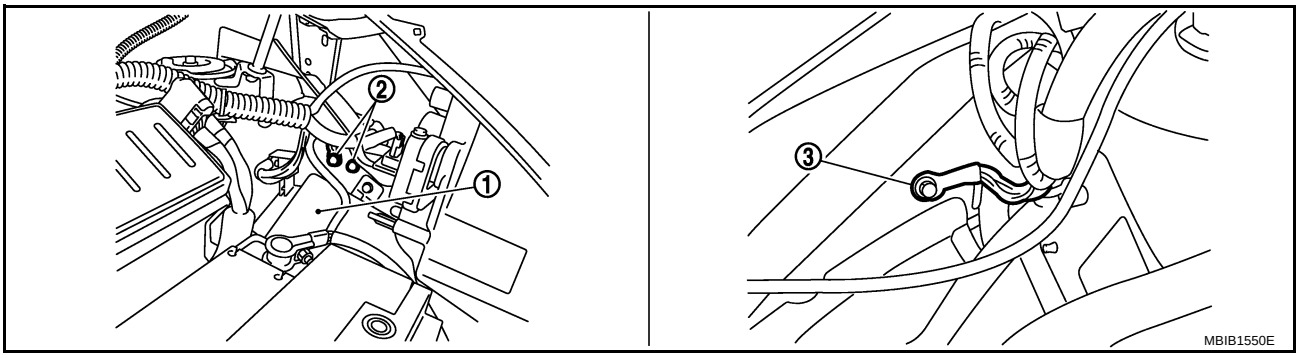

1. IPDM E/R
2. Body ground
3. Body ground

OK or NG

OK >> GO TO 5.
NG >> Repair or replace ground connections.

5. CHECK ECM GROUND CIRCUIT FOR OPEN AND SHORT-I

1. Disconnect ECM harness connector.
2. Check harness continuity between ECM terminals 10, 11, 108 and ground.
   Refer to Wiring Diagram.

   Continuity should exist.

3. Also check harness for short to power.

OK or NG

OK >> GO TO 7.
NG >> GO TO 6.

6. DETECT MALFUNCTIONING PART

Check the following.

- Harness connectors F1, E59
- Harness for open or short between ECM and ground

>> Repair open circuit or short to power in harness or connectors.

7. CHECK ECM POWER SUPPLY CIRCUIT-II

1. Reconnect ECM harness connector.
2. Turn ignition switch ON.
3. Check voltage between IPDM E/R terminal 33 and ground with CONSULT-II or tester.

Voltage: Battery voltage

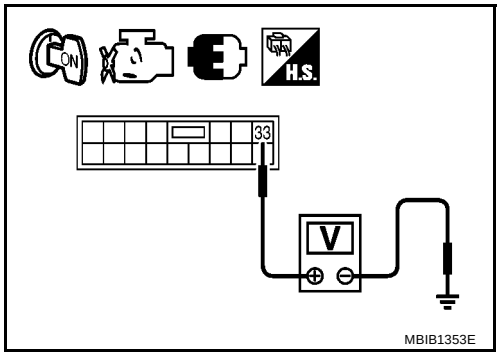

OK or NG

OK >> Go to EC-1580, "IGNITION SIGNAL" .
NG >> GO TO 8.

8. CHECK ECM POWER SUPPLY CIRCUIT-III

1. Turn ignition switch OFF and wait at least 10 seconds.
2. Turn ignition switch ON and then OFF.
3. Check voltage between ECM terminal 105 and ground with CONSULT-II or tester.

Voltage: After turning ignition switch OFF, battery voltage will exist for a few seconds, then drop approximately 0V.

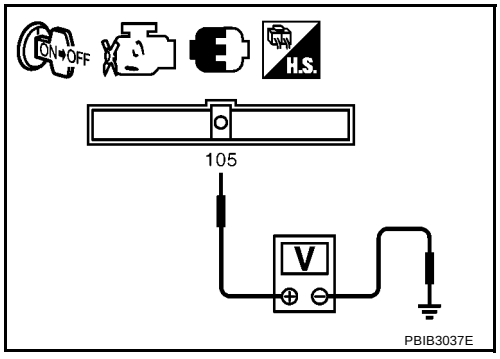

OK or NG

OK >> GO TO 14.
NG (Battery voltage does not exist.)>>GO TO 9.
NG (Battery voltage exists for more than a few seconds.)>>GO TO 11.

9. CHECK ECM POWER SUPPLY CIRCUIT-IV

1. Turn ignition switch OFF and wait at least 10 seconds.
2. Check voltage between ECM terminal 32 and ground with CONSULT-II or tester.

Voltage: Battery voltage

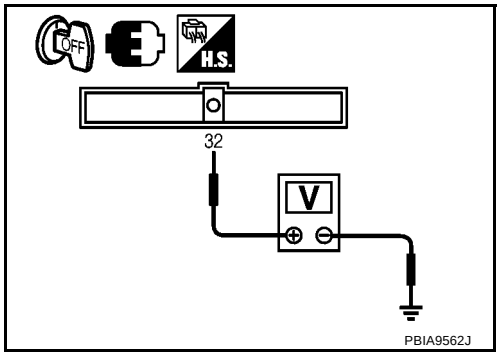

OK or NG

OK >> GO TO 10.
NG >> GO TO 11.

10. CHECK ECM POWER SUPPLY CIRCUIT-V

1. Disconnect ECM harness connector.
2. Disconnect IPDM E/R harness connector E7.
3. Check harness continuity between ECM terminal 105 and IPDM E/R terminal 32.
   Refer to Wiring Diagram.

   Continuity should exist.

4. Also check harness for short to ground and short to power.

OK or NG

OK >> GO TO 17.
NG >> Repair open circuit or short to ground or short to power in harness or connectors.

11. CHECK ECM POWER SUPPLY CIRCUIT-VI

1. Disconnect ECM harness connector.
2. Disconnect IPDM E/R harness connector E7.
3. Check harness continuity between ECM terminal 32 and IPDM E/R terminal 29.
   Refer to Wiring Diagram.

   Continuity should exist.

4. Also check harness for short to ground and short to power.

OK or NG

OK >> GO TO 13.
NG >> GO TO 12.

12. DETECT MALFUNCTIONING PART

Check the following.

- Harness or connectors E59, F1
- Harness for open or short between ECM and IPDM E/R

>> Repair open circuit or short to ground or short to power in harness or connectors.

13. CHECK 20A FUSE

1. Disconnect 20A fuse from IPDM E/R.
2. Check 20A fuse.

OK or NG

OK >> GO TO 17.
NG >> Replace 20A fuse.

14. CHECK GROUND CONNECTIONS-II

1. Loosen and retighten ground screws on the body.
   Refer to EC-1342, "Ground Inspection" .

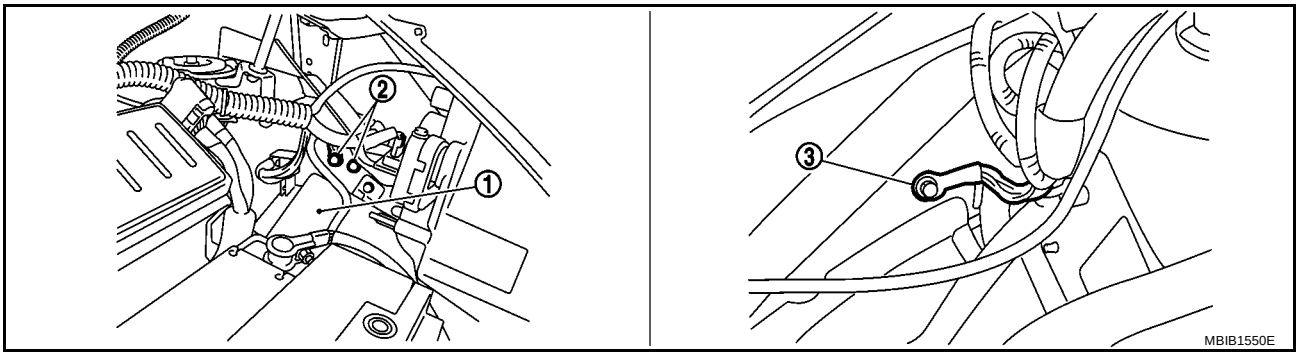

1. IPDM E/R
2. Body ground
3. Body ground

OK or NG

OK >> GO TO 15.
NG >> Repair or replace ground connections.

15. CHECK ECM GROUND CIRCUIT FOR OPEN AND SHORT-II

1. Disconnect ECM harness connector.
2. Check harness continuity between ECM terminals 10, 11, 108 and ground.
   Refer to Wiring Diagram.

   Continuity should exist.

3. Also check harness for short to power.

OK or NG

OK >> GO TO 17.
NG >> GO TO 16.

16. DETECT MALFUNCTIONING PART

Check the following.

- Harness or connectors F1, E59
- Harness for open or short between ECM and ground

>> Repair open circuit or short to power in harness or connectors.

17. CHECK INTERMITTENT INCIDENT

Refer to EC-1336, "TROUBLE DIAGNOSIS FOR INTERMITTENT INCIDENT" .

OK or NG

OK >> Replace IPDM E/R. Refer to PG-18, "IPDM E/R (INTELLIGENT POWER DISTRIBUTION MODULE ENGINE ROOM)" .
NG >> Repair open circuit or short to power in harness or connectors.

Ground Inspection

BBS004LG

Ground connections are very important to the proper operation of electrical and electronic circuits. Ground connections are often exposed to moisture, dirt and other corrosive elements. The corrosion (rust) can become an unwanted resistance. This unwanted resistance can change the way a circuit works.
Electronically controlled circuits are very sensitive to proper grounding. A loose or corroded ground can drastically affect an electronically controlled circuit. A poor or corroded ground can easily affect the circuit. Even when the ground connection looks clean, there can be a thin film of rust on the surface.
When inspecting a ground connection follow these rules:

- Remove the ground bolt or screw.
- Inspect all mating surfaces for tarnish, dirt, rust, etc.
- Clean as required to assure good contact.
- Reinstall bolt or screw securely.
- Inspect for “add-on” accessories which may be interfering with the ground circuit.
- If several wires are crimped into one ground eyelet terminal, check for proper crimps. Make sure all of the wires are clean, securely fastened and providing a good ground path. If multiple wires are cased in one eyelet make sure no ground wires have excess wire insulation.

For detailed ground distribution information, refer to PG-38, "Ground Distribution" .

Ground Inspection

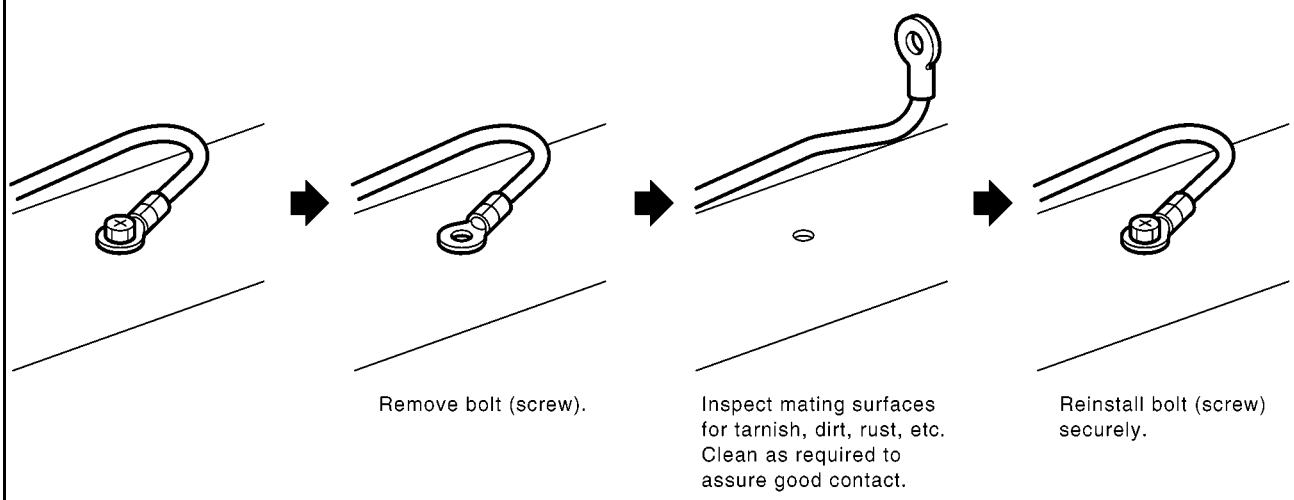

DTC U1000, U1001 CAN COMMUNICATION LINE

PFP:23710

Description

BBS004LH

CAN (Controller Area Network) is a serial communication line for real time application. It is an on-vehicle multiplex communication line with high data communication speed and excellent error detection ability. Many electronic control units are equipped onto a vehicle, and each control unit shares information and links with other control units during operation (not independent). In CAN communication, control units are connected with 2 communication lines (CAN H line, CAN L line) allowing a high rate of information transmission with less wiring. Each control unit transmits/receives data but selectively reads required data only.

On Board Diagnosis Logic

BBS004LI

The MI will not light up for these self-diagnoses.

DTC No.	Trouble diagnosis name	DTC detecting condition	Possible cause
U1000 1000	CAN communication line	● ECM cannot communicate to other control units. ● ECM cannot communicate for more than the specified time.	● Harness or connectors (CAN communication line is open or shorted.)
U1001 1001			

DTC Confirmation Procedure

BBS004LJ

1. Turn ignition switch ON and wait at least 3 seconds.
2. Select “DATA MONITOR” mode with CONSULT-II.
3. If 1st trip DTC is detected, go to EC-1346, "Diagnostic Procedure" .

Wiring Diagram

BBS004LK

EC-CAN-01

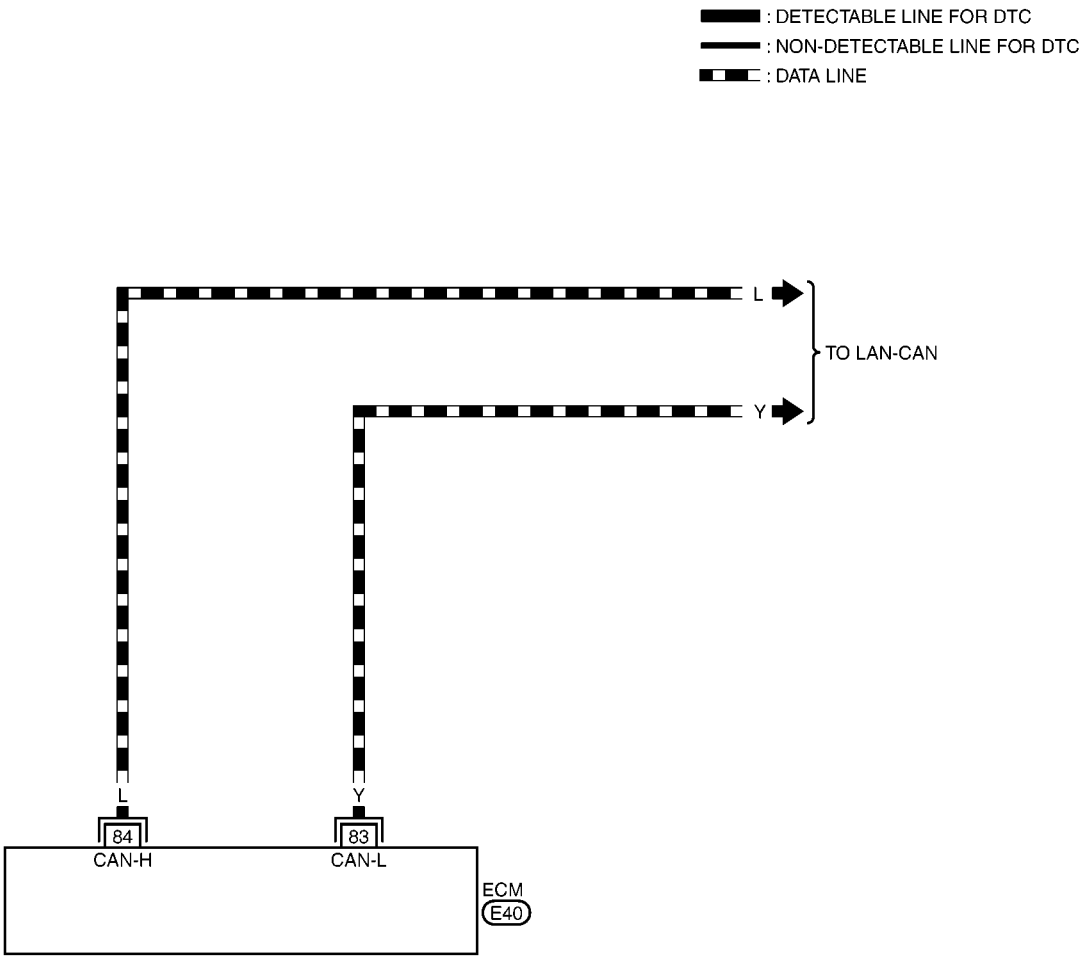

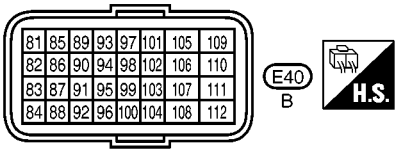

MBWA1456E

Diagnostic Procedure

BBS004LL

Go to LAN-3, "Precautions When Using CONSULT-II" .

DTC U1010 CAN COMMUNICATION

PFP:23710

Description

BBS004LM

CAN (Controller Area Network) is a serial communication line for real time application. It is an on-vehicle multiplex communication line with high data communication speed and excellent error detection ability. Many electronic control units are equipped onto a vehicle, and each control unit shares information and links with other control units during operation (not independent). In CAN communication, control units are connected with 2 communication lines (CAN H line, CAN L line) allowing a high rate of information transmission with less wiring. Each control unit transmits/receives data but selectively reads required data only.

On Board Diagnosis Logic

BBS004LN

The MI will not light up for this self-diagnosis.

DTC No.	Trouble diagnosis name	DTC detecting condition	Possible cause
U1010 1010	CAN communication bus	Initializing CAN communication bus is malfunctioning.	● ECM

DTC Confirmation Procedure

BBS004LO

WITH CONSULT-II

1. Turn ignition switch ON.
2. Select “DATA MONITOR” mode with CONSULT-II.
3. If 1st trip DTC is detected, go to EC-1348, "Diagnostic Procedure" .

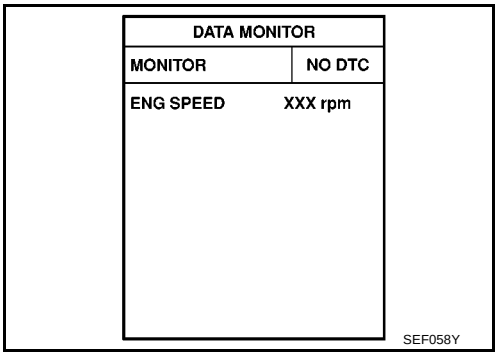

WITHOUT CONSULT-II

1. Turn ignition switch ON.
2. Turn ignition switch OFF, wait at least 10 seconds and then turn ON.
3. Perform Diagnostic Test Mode II (Self-diagnostic results) with ECM.
4. If 1st trip DTC is detected, go to EC-1348, "Diagnostic Procedure" .

Diagnostic Procedure

BBS004LP

1. INSPECTION START

With CONSULT-II

1. Turn ignition switch ON.
2. Select “SELF-DIAG RESULTS” mode with CONSULT-II.
3. Touch “ERASE”.
4. **Perform DTC Confirmation Procedure.**
   See EC-1347, "DTC Confirmation Procedure" .
5. Is the 1st trip DTC U1010 displayed again?

Without CONSULT-II

1. Turn ignition switch ON.
2. Erase the Diagnostic Test Mode II (Self-diagnostic results) memory. Refer to EC-1267, "HOW TO ERASE EMISSION-RELATED DIAGNOSTIC INFORMATION" .
3. **Perform DTC Confirmation Procedure.**
   See EC-1347, "DTC Confirmation Procedure" .
4. Is the 1st trip DTC 1010 displayed again?

Yes or No

Yes >> GO TO 2.
No >> **INSPECTION END**

2. REPLACE ECM

1. Replace ECM.
2. Perform initialization of NATS system and registration of all NATS ignition key IDs. Refer to BL-218, "ECM Re-communicating Function" .
3. Perform EC-1278, "Accelerator Pedal Released Position Learning" .
4. Perform EC-1279, "Throttle Valve Closed Position Learning" .
5. Perform EC-1279, "Idle Air Volume Learning" .

>> **INSPECTION END**

DTC P0011 IVT CONTROL

PFP:23796

Description

BBS004LQ

SYSTEM DESCRIPTION

Sensor	Input signal to ECM	ECM function	Actuator
Crankshaft position sensor (POS) Camshaft position sensor (PHASE)	Engine speed and piston position	Intake valve timing control	Intake valve timing control solenoid valve
Engine coolant temperature sensor	Engine coolant temperature		
Wheel sensor	Vehicle speed*		

*: This signal is sent to the ECM through CAN communication line.

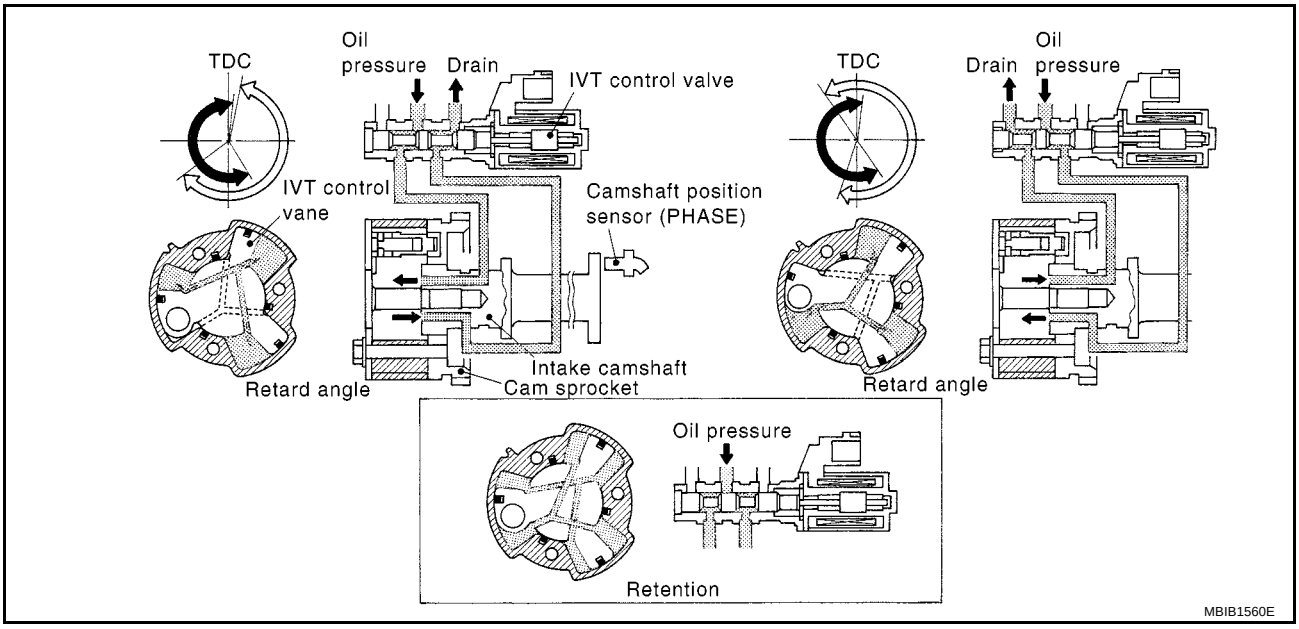

This mechanism hydraulically controls cam phases continuously with the fixed operating angle of the intake valve.

The ECM receives signals such as crankshaft position, camshaft position, engine speed, and engine coolant temperature. Then, the ECM sends ON/OFF pulse duty signals to the intake valve timing control solenoid valve depending on driving status. This makes it possible to control the shut/open timing of the intake valve to increase engine torque in low/mid speed range and output in high-speed range.

CONSULT-II Reference Value in Data Monitor Mode

BBS004LR

Specification data are reference values.

MONITOR ITEM	CONDITION		SPECIFICATION
INT/V TIM (B1)	● Engine: After warming up ● Air conditioner switch: OFF ● Shift lever: P or N (A/T), Neutral (M/T) ● No load	Idle	–5° - 5°CA
		2,500 rpm	Approx. 0° - 40°CA
INT/V SOL (B1)	● Engine: After warming up ● Air conditioner switch: OFF ● Shift lever: P or N (A/T), Neutral (M/T) ● No load	Idle	0% - 2%
		2,500 rpm	Approx. 0% - 90%

On Board Diagnosis Logic

BBS004LS

The MI will not light up for this self-diagnosis.

DTC No.	Trouble diagnosis name	Detecting condition	Possible cause
P0011 0011	Intake valve timing control performance	There is a gap between angle of target and phase-control angle degree.	● Crankshaft position sensor (POS) ● Camshaft position sensor (PHASE) ● Intake valve timing control solenoid valve ● Accumulation of debris to the signal pick-up portion of the camshaft ● Timing chain installation ● Foreign matter caught in the oil groove for intake valve timing control

FAIL-SAFE MODE

ECM enters in fail-safe mode when the malfunction is detected.

Detected items	Engine operating condition in fail-safe mode
Intake valve timing control	The signal is not energized to the solenoid valve and the valve control does not function

DTC Confirmation Procedure

BBS004LT

CAUTION:
Always drive at a safe speed.

NOTE:

- **If DTC P0011 is displayed with DTC P1111, first perform trouble diagnosis for DTC P1111. See EC-1425, "DTC P1111 IVT CONTROL SOLENOID VALVE" .**
- If DTC Confirmation Procedure has been previously conducted, always turn ignition switch OFF and wait at least 10 seconds before conducting the next test.

TESTING CONDITION:
Before performing the following procedure, confirm that battery voltage is between 10V and 16V at idle.

WITH CONSULT-II

1. Turn ignition switch ON and select “DATA MONITOR” mode with CONSULT-II.
2. Start engine and warm it up to the normal operating temperature.
3. Maintain the following conditions for at least 6 consecutive seconds.
   Hold the accelerator pedal as steady as possible.

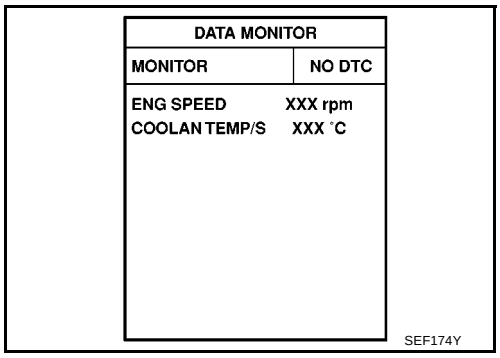

ENG SPEED	1,200 - 2,000 rpm (A constant rotation is maintained.)
COOLANT TEMPS	60 - 120°C (140 - 248°F)
B/FUEL SCHDL	More than 3.5 msec
Shift lever	A/T: P or N position M/T: Neutral position

4. Let engine idle for 10 seconds.
5. If the 1st trip DTC is detected, go to EC-1352, "Diagnostic Procedure" .
   If the 1st trip DTC is not detected, go to next step.
6. Maintain the following conditions for at least 20 consecutive seconds.

ENG SPEED	1,700 - 3,175 rpm (A constant rotation is maintained.)
COOLANT TEMPS	70 - 105°C (158 - 221°F)

Shift lever	1st or 2nd position
Driving location uphill	Driving vehicle uphill (Increased engine load will help maintain the driving conditions required for this test.)

7. If 1st trip DTC is detected, go to EC-1352, "Diagnostic Procedure" .

Overall Function Check

BBS004LU

Use this procedure to check the overall function of the intake valve timing control system. During this check, a 1st trip DTC might not be confirmed.

WITHOUT CONSULT-II

1. Start engine and warm it up to normal operating temperature.
2. Turn ignition switch OFF and wait at least 10 seconds.
3. Turn ignition switch ON.
4. Set the tester probe between ECM terminal 73 (IVT control solenoid valve signal) and ground.
5. Start engine and let it idle.
6. Check the voltage under the following conditions.
   Verify that the oscilloscope screen shows the signal wave as shown below.

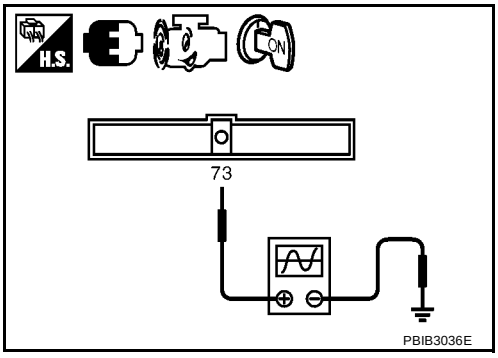

Conditions	Voltage
At idle	BATTERY VOLTAGE (11 - 14V)
Engine speed: 2,000 rpm	7V - 10V ★ 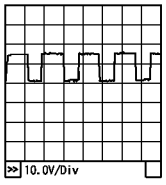 PBIA4937J

★: Average voltage for pulse signal (Actual pulse signal can be confirmed by oscilloscope.)

7. If NG, go to EC-1352, "Diagnostic Procedure" .

Diagnostic Procedure

BBS004LV

1. CHECK OIL PRESSURE WARNING LAMP

1. Start engine.
2. Check oil pressure warning lamp and confirm it is not illuminated.

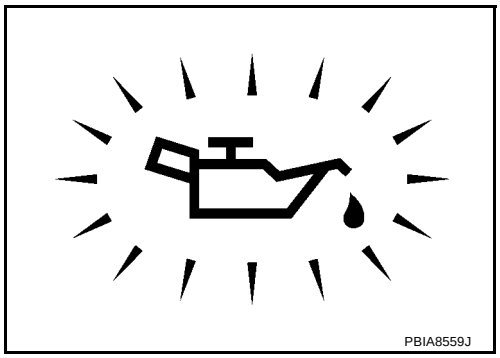

OK or NG

OK >> GO TO 2.
KG >> Go to LU-16, "OIL PRESSURE CHECK" .

2. CHECK INTAKE VALVE TIMING CONTROL SOLENOID VALVE

Refer to EC-1353, "Component Inspection" .

OK or NG

OK >> GO TO 3.
NG >> Replace intake valve timing control solenoid valve.

3. CHECK CRANKSHAFT POSITION SENSOR (POS)

Refer to EC-1412, "Component Inspection" .

OK or NG

OK >> GO TO 4.
NG >> Replace crankshaft position sensor (POS).

4. CHECK CAMSHAFT POSITION SENSOR (PHASE)

Refer to EC-1418, "Component Inspection" .

OK or NG

OK >> GO TO 5.
NG >> Replace camshaft position sensor (PHASE).

5. CHECK CAMSHAFT (INTAKE)

Check the following.

- Accumulation of debris to the signal plate of camshaft (1) rear end
- Chipping signal plate of camshaft rear end

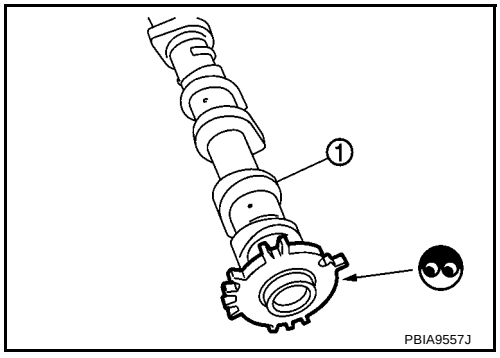

OK or NG

OK >> GO TO 6.
NG >> Remove debris and clean the signal plate of camshaft rear end or replace camshaft.

6. CHECK TIMING CHAIN INSTALLATION

Check service records for any recent repairs that may cause timing chain misaligned.
Are there any service records that may cause timing chain misaligned?

Yes or No

Yes >> Check timing chain installation. Refer to EM-142, "TIMING CHAIN" .
No >> GO TO 7.

7. CHECK LUBRICATION CIRCUIT

Refer to EM-166, "Inspection of Camshaft Sprocket (INT) Oil Groove" .

OK or NG

OK >> GO TO 8.
NG >> Clean lubrication line.

8. CHECK INTERMITTENT INCIDENT

Refer to EC-1336, "TROUBLE DIAGNOSIS FOR INTERMITTENT INCIDENT" .
For Wiring Diagram, refer to EC-1407, "Wiring Diagram" for CKP sensor (POS) and EC-1415, "Wiring Diagram" for CMP sensor (PHASE).

>> **INSPECTION END**

Component Inspection

BBS004LW

INTAKE VALVE TIMING CONTROL SOLENOID VALVE

1. Disconnect intake valve timing control solenoid valve harness connector.
2. Check resistance between intake valve timing control solenoid valve as follows.

Terminal	Resistance
1 and 2	6.7 - 7.7Ω [at 20°C (68°F)]
1 or 2 and ground	∞Ω (Continuity should not exist.)

If NG, replace intake valve timing control solenoid valve.
If OK, go to next step.

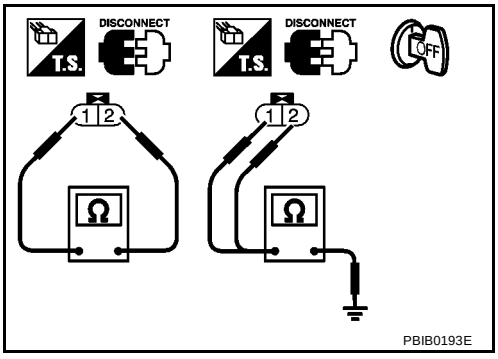

3. Remove intake valve timing control solenoid valve.
4. Provide 12V DC between intake valve timing control solenoid valve terminals and then interrupt it. Make sure that the plunger moves as shown in the figure.

CAUTION:
Do not apply 12V DC continuously for 5 seconds or more. Doing so may result in damage to the coil in intake valve timing control solenoid valve.
If NG, replace intake valve timing control solenoid valve.

NOTE:
Always replace O-ring when intake valve timing control solenoid valve is removed.

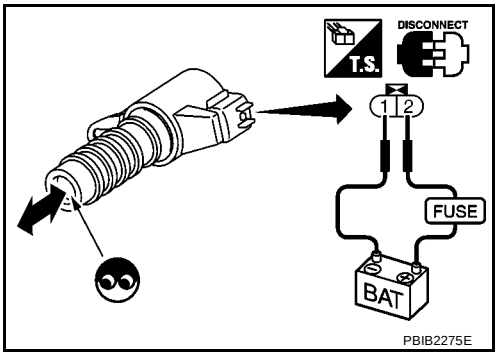

Removal and Installation

BBS004LX

INTAKE VALVE TIMING CONTROL SOLENOID VALVE

Refer to EM-142, "TIMING CHAIN" .

DTC P0102, P0103 MAF SENSOR

PFP:22680

Component Description

BBS004LY

The mass air flow sensor (1) is placed in the stream of intake air. It measures the intake flow rate by measuring a part of the entire intake flow. The mass air flow sensor controls the temperature of the hot wire to a certain amount. The heat generated by the hot wire is reduced as the intake air flows around it. The more air, the greater the heat loss.
Therefore, the electric current supplied to hot wire is changed to maintain the temperature of the hot wire as air flow increases. The ECM detects the air flow by means of this current change.

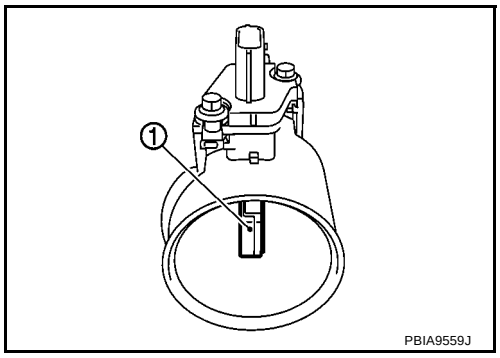

CONSULT-II Reference Value in Data Monitor Mode

BBS004LZ

Specification data are reference values.

MONITOR ITEM	CONDITION	SPECIFICATION
MAS A/F SE-B1	See EC-1326, "TROUBLE DIAGNOSIS - SPECIFICATION VALUE" .	

On Board Diagnosis Logic

BBS004M0

These self-diagnoses have the one trip detection logic.

DTC No.	Trouble diagnosis name	DTC detecting condition	Possible cause
P0102 0102	Mass air flow sensor circuit low input	An excessively low voltage from the sensor is sent to ECM.	● Harness or connectors (The sensor circuit is open or shorted.) ● Intake air leaks ● Mass air flow sensor
P0103 0103	Mass air flow sensor circuit high input	An excessively high voltage from the sensor is sent to ECM.	● Harness or connectors (The sensor circuit is open or shorted.) ● Mass air flow sensor

FAIL-SAFE MODE

When the malfunction is detected, the ECM enters fail-safe mode and the MI lights up.

Detected items	Engine operating condition in fail-safe mode
Mass air flow sensor circuit	Engine speed will not rise more than 2,400 rpm due to the fuel cut.

DTC Confirmation Procedure

BBS004M1

NOTE:
If DTC Confirmation Procedure has been previously conducted, always turn ignition switch OFF and wait at least 10 seconds before conducting the next test.

PROCEDURE FOR DTC P0102

With CONSULT-II

1. Turn ignition switch ON.
2. Select “DATA MONITOR” mode with CONSULT-II.
3. Start engine and wait at least 5 seconds.
4. If DTC is detected, go to EC-1357, "Diagnostic Procedure" .

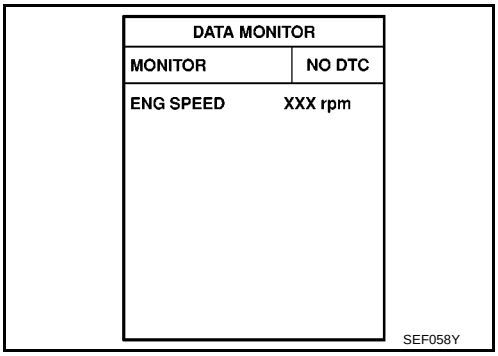

Without CONSULT-II

1. Start engine and wait at least 5 seconds.
2. Turn ignition switch OFF, wait at least 10 seconds and then turn ON.
3. Perform Diagnostic Test Mode II (Self-diagnostic results) with ECM.
4. If DTC is detected, go to EC-1357, "Diagnostic Procedure" .

PROCEDURE FOR DTC P0103

With CONSULT-II

1. Turn ignition switch ON.
2. Select “DATA MONITOR” mode with CONSULT-II.
3. Wait at least 5 seconds.
4. If DTC is detected, go to EC-1357, "Diagnostic Procedure" .
   If DTC is not detected, go to next step.
5. Start engine and wait at least 5 seconds.
6. If DTC is detected, go to EC-1357, "Diagnostic Procedure" .

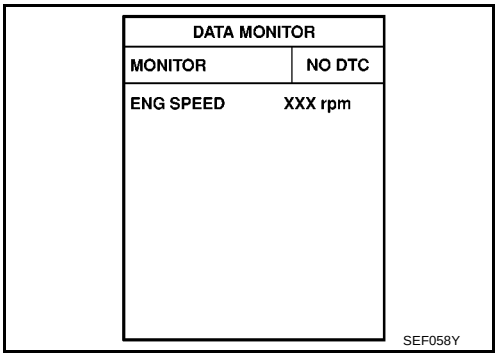

Without CONSULT-II

1. Turn ignition switch ON and wait at least 5 seconds.
2. Turn ignition switch OFF, wait at least 10 seconds and then turn ON.
3. Perform Diagnostic Test Mode II (Self-diagnostic results) with ECM.
4. If DTC is detected, go to EC-1357, "Diagnostic Procedure" .
   If DTC is not detected, go to next step.
5. Turn ignition switch OFF and wait at least 10 seconds.
6. Start engine and wait at least 5 seconds.
7. Turn ignition switch OFF, wait at least 10 seconds and then turn ON.
8. Perform Diagnostic Test Mode II (Self-diagnostic results) with ECM.
9. If DTC is detected, go to EC-1357, "Diagnostic Procedure" .

Wiring Diagram

BBS004M2

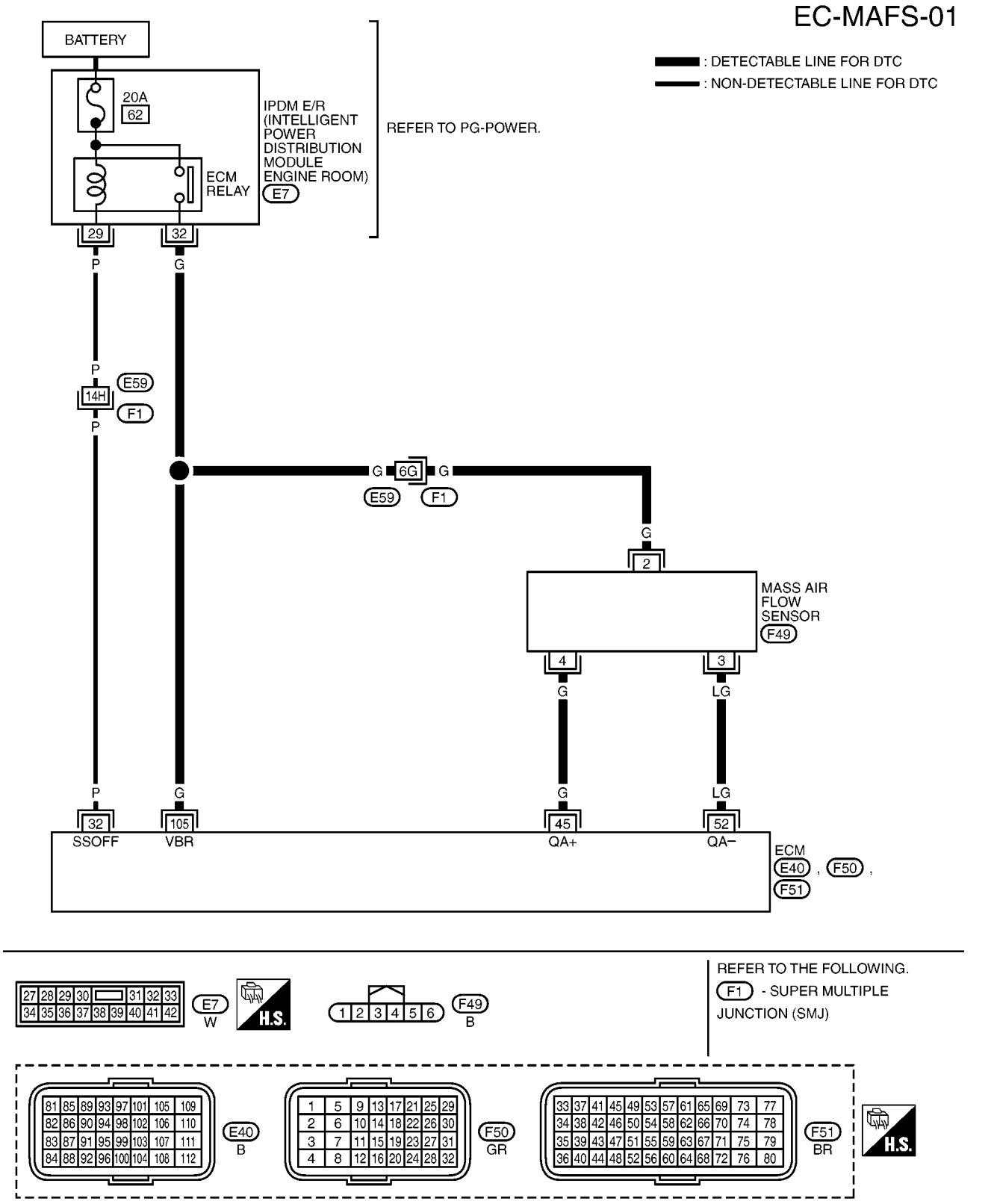

Specification data are reference values and are measured between each terminal and ground.

CAUTION:
Do not use ECM ground terminals when measuring input/output voltage. Doing so may result in damage to the ECM's transistor. Use a ground other than ECM terminals, such as the ground.

TERMINAL NO.	WIRE COLOR	ITEM	CONDITION	DATA (DC Voltage)
32	P	ECM relay (Self shut-off)	**[Engine is running]** **[Ignition switch: OFF]** ● For a few seconds after turning ignition switch OFF	0 - 1.0V
			[Ignition switch: OFF] ● More than a few seconds after turning ignition switch OFF	BATTERY VOLTAGE (11 - 14V)
45	G	Mass air flow sensor	**[Ignition switch: ON]** ● Engine stopped	Approximately 0.4V
			[Engine is running] ● **Warm-up condition** ● Idle speed	1.0 - 1.3V
			[Engine is running] ● **Warm-up condition** ● Engine is revving from idle to about 4,000 rpm	1.0 - 1.3 to Approximately 2.4V (Check for linear voltage rise in response to engine being increased to about 4,000 rpm.)
52	LG	Sensor ground (Mass air flow sensor)	**[Engine is running]** ● **Warm-up condition** ● Idle speed	Approximately 0V
105	G	Power supply for ECM	**[Ignition switch: ON]**	BATTERY VOLTAGE (11 - 14V)

Diagnostic Procedure

BBS004M3

1. INSPECTION START

Which malfunction (P0102 or P0103) is duplicated?

P0102 or P0103

P0102 >> GO TO 2.
P0103 >> GO TO 3.

2. CHECK INTAKE SYSTEM

Check the following for connection.

- Air duct
- Vacuum hoses
- Intake air passage between air duct to intake manifold

OK or NG

OK >> GO TO 3.
NG >> Reconnect the parts.

3. CHECK GROUND CONNECTIONS

1. Turn ignition switch OFF.
2. Loosen and retighten ground screws on the body.
   Refer to EC-1342, "Ground Inspection" .

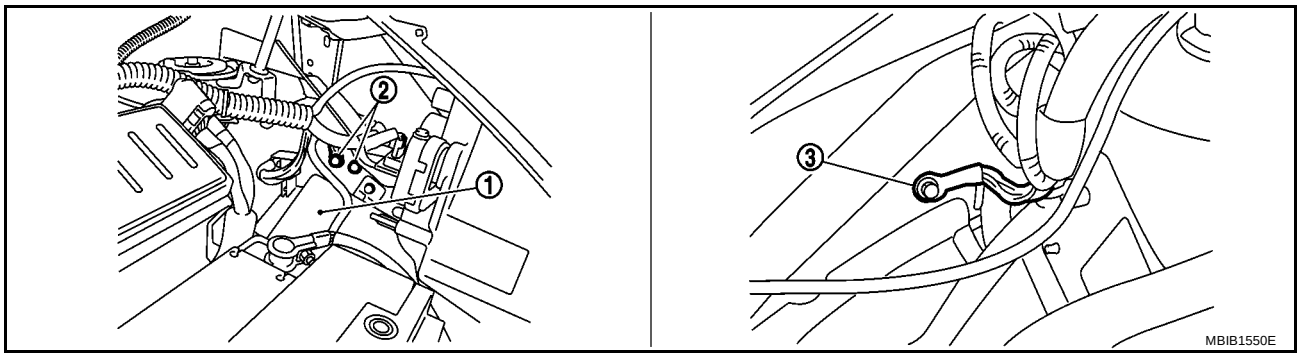

1. IPDM E/R
2. Body ground
3. Body ground

OK or NG

OK >> GO TO 4.
NG >> Repair or replace ground connections.

4. CHECK MAF SENSOR POWER SUPPLY CIRCUIT

1. Disconnect mass air flow (MAF) sensor (1) harness connector.
2. Turn ignition switch ON.

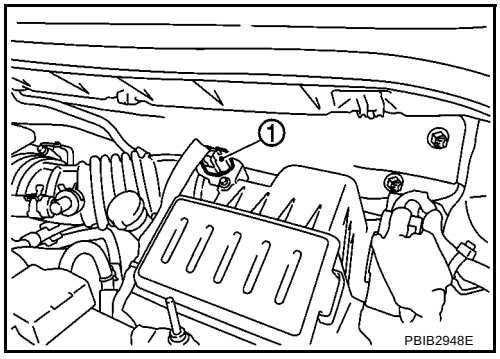

3. Check voltage between MAF sensor terminal 2 and ground with CONSULT-II or tester.

   Voltage: Battery voltage

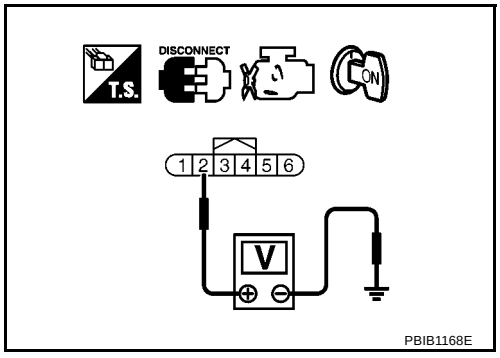

OK or NG

OK >> GO TO 6.
NG >> GO TO 5.

5. DETECT MALFUNCTIONING PART

Check the following.

- Harness connectors E59, F1
- Harness for open or short between mass air flow sensor and ECM
- Harness for open or short between mass air flow sensor and IPDM E/R

>> Repair open circuit or short to ground or short to power in harness or connectors.

6. CHECK MAF SENSOR GROUND CIRCUIT FOR OPEN AND SHORT

1. Turn ignition switch OFF.
2. Disconnect ECM harness connector.
3. Check harness continuity between MAF sensor terminal 3 and ECM terminal 52.
   Refer to Wiring Diagram.

   Continuity should exist.

4. Also check harness for short to ground and short to power.

OK or NG

OK >> GO TO 7.
NG >> Repair open circuit or short to ground or short to power in harness or connectors.

7. CHECK MAF SENSOR INPUT SIGNAL CIRCUIT FOR OPEN AND SHORT

1. Check harness continuity between MAF sensor terminal 4 and ECM terminal 45.
   Refer to Wiring Diagram.

   Continuity should exist.

2. Also check harness for short to ground and short to power.

OK or NG

OK >> GO TO 8.
NG >> Repair open circuit or short to ground or short to power in harness or connectors.

8. CHECK MASS AIR FLOW SENSOR

Refer to EC-1359, "Component Inspection" .

OK or NG

OK >> GO TO 9.
NG >> Replace mass air flow sensor.

9. CHECK INTERMITTENT INCIDENT

Refer to EC-1336, "TROUBLE DIAGNOSIS FOR INTERMITTENT INCIDENT" .

>> **INSPECTION END**

Component Inspection

BBS004M4

MASS AIR FLOW SENSOR

With CONSULT-II

1. Reconnect all harness connectors disconnected.
2. Start engine and warm it up to normal operating temperature.
3. Connect CONSULT-II and select “DATA MONITOR” mode.
4. Select “MAS A/F SE-B1” and check indication under the following conditions.

Condition	MAS A/F SE-B1 (V)
Ignition switch ON (Engine stopped.)	Approx. 0.4
Idle (Engine is warmed-up to normal operating temperature.)	1.0 - 1.3
Idle to about 4,000 rpm	1.0 - 1.3 to Approx. 2.4*

*: Check for linear voltage rise in response to engine being increased to about 4,000 rpm.

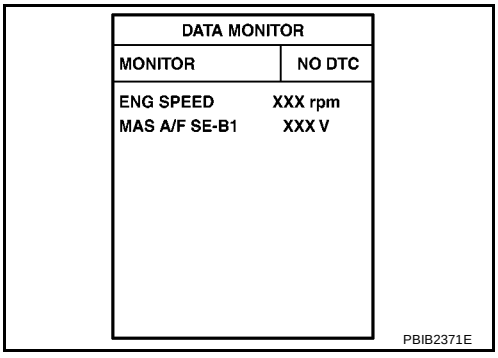

5. If the voltage is out of specification, proceed the following.

a. Check for the cause of uneven air flow through mass air flow sensor. Refer to following.

- Crushed air ducts
- Malfunctioning seal of air cleaner element
- Uneven dirt of air cleaner element
- Improper specification of intake air system parts

b. If NG, repair or replace malfunctioning part and perform step 2 to 4 again.
If OK, go to next step.

6. Turn ignition switch OFF.
7. Disconnect mass air flow sensor harness connector and reconnect it again.
8. Perform step 2 to 4 again.
9. If NG, clean or replace mass air flow sensor.

Without CONSULT-II

1. Reconnect all harness connectors disconnected.
2. Start engine and warm it up to normal operating temperature.
3. Check voltage between ECM terminal 45 (Mass air flow sensor signal) and ground.

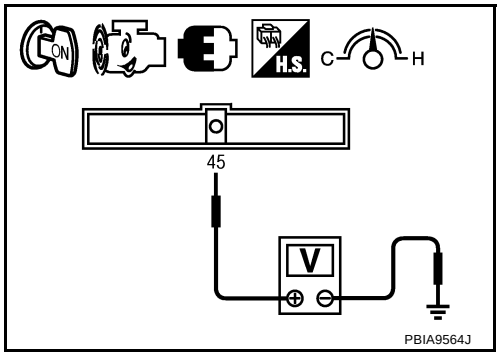

Condition	Voltage V
Ignition switch ON (Engine stopped.)	Approx. 0.4
Idle (Engine is warmed-up to normal operating temperature.)	1.0 - 1.3
Idle to about 4,000 rpm	1.0 - 1.3 to Approx. 2.4*

*: Check for linear voltage rise in response to engine being increased to about 4,000 rpm.

4. If the voltage is out of specification, proceed the following.

a. Check for the cause of uneven air flow through mass air flow sensor. Refer to following.

- Crushed air ducts
- Malfunctioning seal of air cleaner element
- Uneven dirt of air cleaner element
- Improper specification of intake air system parts

b. If NG, repair or replace malfunctioning part and perform step 2 to 3 again.
If OK, go to next step.

5. Turn ignition switch OFF.
6. Disconnect mass air flow sensor harness connector and reconnect it again.
7. Perform step 2 and 3 again.
8. If NG, clean or replace mass air flow sensor.

Removal and Installation

BBS004M5

MASS AIR FLOW SENSOR

Refer to EM-118, "AIR CLEANER AND AIR DUCT" .

DTC P0117, P0118 ECT SENSOR

PFP:22630

Component Description

BBS004M6

The engine coolant temperature sensor is used to detect the engine coolant temperature. The sensor modifies a voltage signal from the ECM. The modified signal returns to the ECM as the engine coolant temperature input. The sensor uses a thermistor which is sensitive to the change in temperature. The electrical resistance of the thermistor decreases as temperature increases.

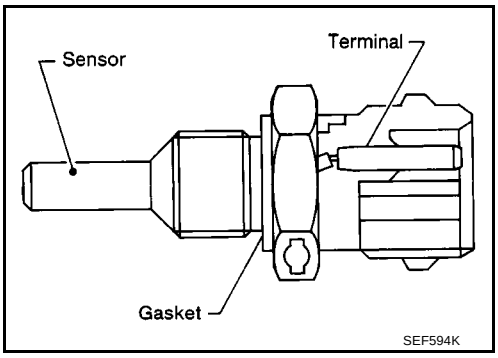

<Reference data>

Engine coolant temperature °C (°F)	Voltage* V	Resistance kΩ
–10 (14)	4.4	7.0 - 11.4
20 (68)	3.5	2.1 - 2.9
50 (122)	2.2	0.68 - 1.00
90 (194)	0.9	0.236 - 0.260

*: This data is reference value and is measured between ECM terminal 38 (Engine coolant temperature sensor) and ground.

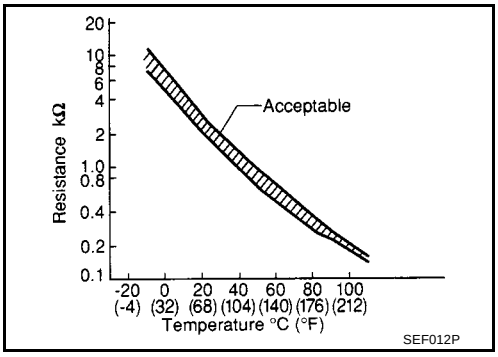

CAUTION:

Do not use ECM ground terminals when measuring input/output voltage. Doing so may result in damage to the ECM's transistor. Use a ground other than ECM terminals, such as the ground.

On Board Diagnosis Logic

BBS004M7

DTC No.	Trouble Diagnosis Name	DTC Detecting Condition	Possible Cause
P0117 0117	Engine coolant temperature sensor circuit low input	An excessively low voltage from the sensor is sent to ECM.	● Harness or connectors (The sensor circuit is open or shorted.) ● Engine coolant temperature sensor
P0118 0118	Engine coolant temperature sensor circuit high input	An excessively high voltage from the sensor is sent to ECM.	

FAIL-SAFE MODE

ECM enters fail-safe mode when the malfunction is detected.

Detected items	Engine operating condition in fail-safe mode	
Engine coolant temperature sensor circuit	Engine coolant temperature will be determined by ECM based on the time after turning ignition switch ON or START. CONSULT-II displays the engine coolant temperature decided by ECM.	
	Condition	Engine coolant temperature decided (CONSULT-II display)
	Just as ignition switch is turned ON or START	40°C (104°F)
	More than approx. 4 minutes after ignition ON or START	80°C (176°F)
	Except as shown above	40 - 80°C (104 - 176°F) (Depends on the time)
	When the fail-safe system for engine coolant temperature sensor is activated, the cooling fan operates while engine is running.	

DTC Confirmation Procedure

BBS004M8

NOTE:
If DTC Confirmation Procedure has been previously conducted, always turn ignition switch OFF and wait at least 10 seconds before conducting the next test.

WITH CONSULT-II

1. Turn ignition switch ON.
2. Select “DATA MONITOR” mode with CONSULT-II.
3. Wait at least 5 seconds.
4. If 1st trip DTC is detected, go to EC-1364, "Diagnostic Procedure" .

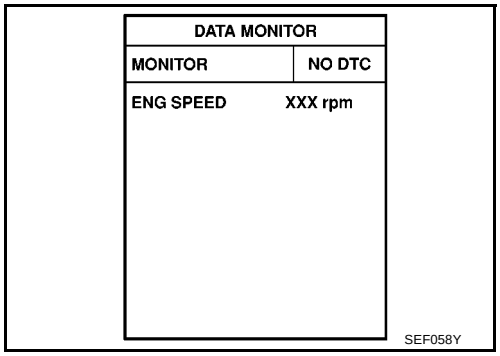

WITHOUT CONSULT-II

1. Turn ignition switch ON and wait at least 5 seconds.
2. Turn ignition switch OFF, wait at least 10 seconds and then turn ON.
3. Perform Diagnostic Test Mode II (Self-diagnostic results) with ECM.
4. If 1st trip DTC is detected, go to EC-1364, "Diagnostic Procedure" .

Wiring Diagram

BBS004M9

EC-ECTS-01

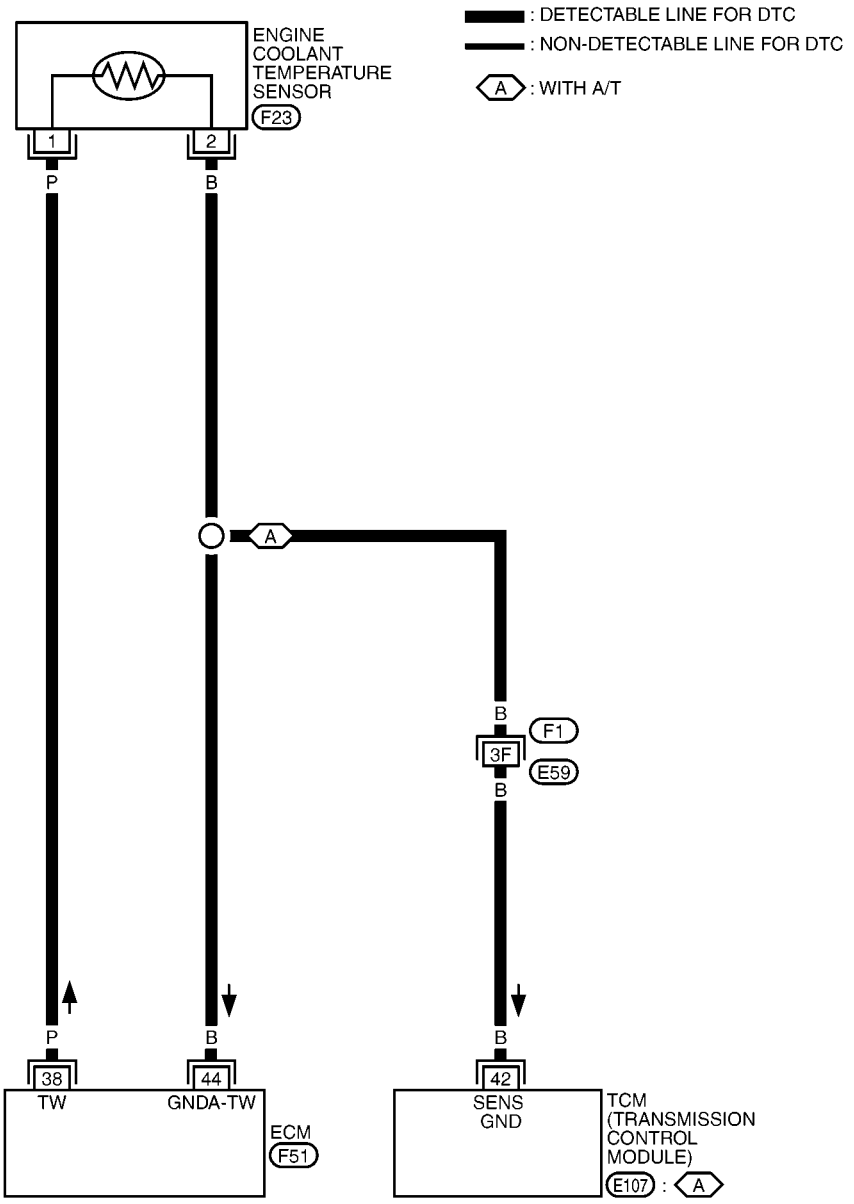

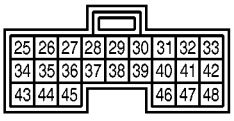

E107
GR

F23
GR

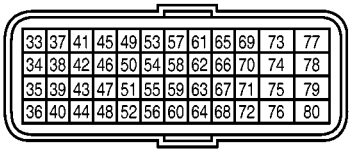

F51
BR

REFER TO THE FOLLOWING.
F1 - SUPER MULTIPLE JUNCTION (SMJ)

MBWA1459E

Diagnostic Procedure

BBS004MA

1. CHECK GROUND CONNECTIONS

1. Turn ignition switch OFF.
2. Loosen and retighten ground screws on the body.
   Refer to EC-1342, "Ground Inspection" .

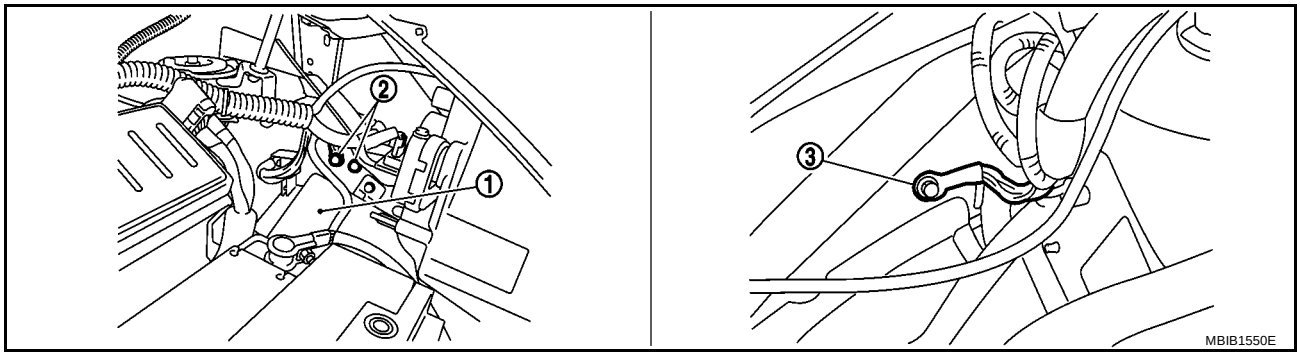

1. IPDM E/R
2. Body ground
3. Body ground

OK or NG

OK >> GO TO 2.
NG >> Repair or replace ground connections.

2. CHECK ECT SENSOR POWER SUPPLY CIRCUIT

1. Disconnect engine coolant temperature (ECT) sensor (1) harness connector.

– ⇦: Vehicle front

2. Turn ignition switch ON.

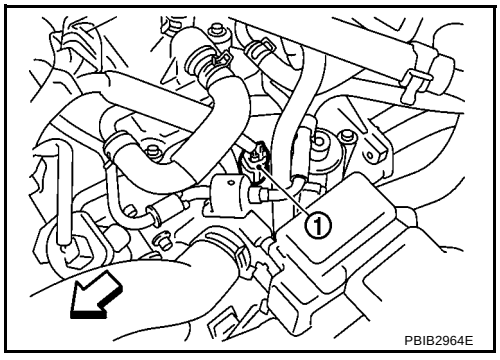

3. Check voltage between ECT sensor terminal 1 and ground with CONSULT-II or tester.

Voltage: Approximately 5V

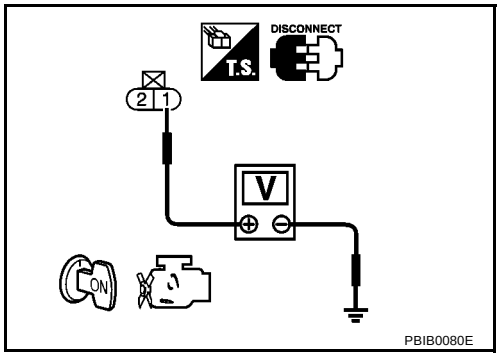

OK or NG

OK >> GO TO 3.
NG >> Repair open circuit or short to ground or short to power in harness or connectors.

3. CHECK ECT SENSOR GROUND CIRCUIT FOR OPEN AND SHORT

1. Turn ignition switch OFF.
2. Disconnect ECM harness connector.
3. Disconnect TCM harness connector.
4. Check harness continuity between ECM terminal 44, TCM terminal 42 and ECT sensor terminal 2. Refer to Wiring Diagram.

   Continuity should exist.

5. Also check harness for short to ground and short to power.

OK or NG

OK >> GO TO 5.
NG >> GO TO 4.

4. DETECT MALFUNCTIONING PART

Check the following.

- Harness connectors E59, F1
- Harness for open or short between ECM and ECT sensor
- Harness for open or short between TCM and ECT sensor

>> Repair open circuit or short to ground or short to power in harness or connectors.

5. CHECK ENGINE COOLANT TEMPERATURE SENSOR

Refer to EC-1365, "Component Inspection" .

OK or NG

OK >> GO TO 6.
NG >> Replace engine coolant temperature sensor.

6. CHECK INTERMITTENT INCIDENT

Refer to EC-1336, "TROUBLE DIAGNOSIS FOR INTERMITTENT INCIDENT" .

>> **INSPECTION END**

Component Inspection

BBS004MB

ENGINE COOLANT TEMPERATURE SENSOR

1. Check resistance between engine coolant temperature sensor terminals 1 and 2 as shown in the figure.

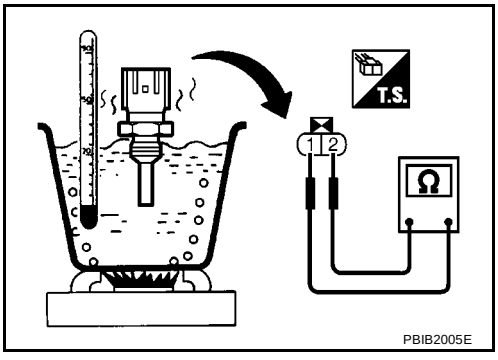

<Reference data>

Temperature °C (°F)	Resistance kΩ
20 (68)	2.1 - 2.9
50 (122)	0.68 - 1.00
90 (194)	0.236 - 0.260

2. If NG, replace engine coolant temperature sensor.

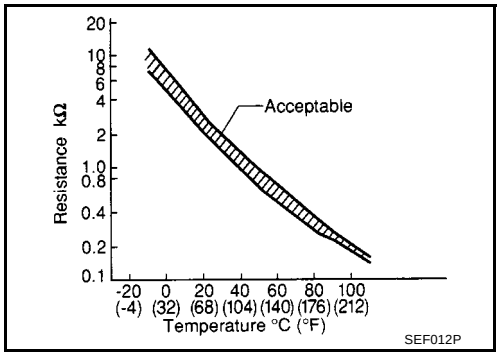

BBS004MC

Removal and Installation

ENGINE COOLANT TEMPERATURE SENSOR

Refer to EM-173, "CYLINDER HEAD" .

DTC P0122, P0123 TP SENSOR

PFP:16119

Component Description

BBS004MD

Electric throttle control actuator consists of throttle control motor, throttle position sensor, etc. The throttle position sensor responds to the throttle valve movement.
The throttle position sensor has the two sensors. These sensors are a kind of potentiometers which transform the throttle valve position into output voltage, and emit the voltage signal to the ECM. In addition, these sensors detect the opening and closing speed of the throttle valve and feed the voltage signals to the ECM. The ECM judges the current opening angle of the throttle valve from these signals and the ECM controls the throttle control motor to make the throttle valve opening angle properly in response to driving condition.

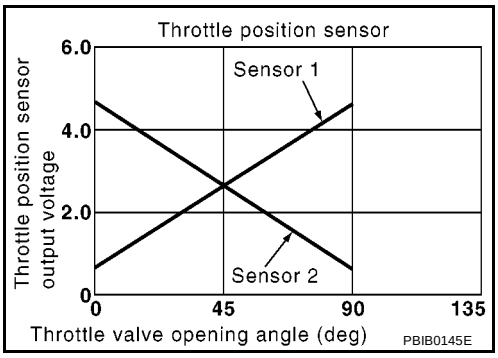

CONSULT-II Reference Value in Data Monitor Mode

BBS004ME

Specification data are reference values.

MONITOR ITEM	CONDITION		SPECIFICATION
THRTL SEN 1 THRTL SEN 2*	● Ignition switch: ON (Engine stopped) ● Shift lever: D (A/T), 1st (M/T)	Accelerator pedal: Fully released	More than 0.36V
		Accelerator pedal: Fully depressed	Less than 4.75V

*: Throttle position sensor 2 signal is converted by ECM internally. Thus, it differs from ECM terminal voltage signal.

On Board Diagnosis Logic

BBS004MF

These self-diagnoses have the one trip detection logic.

NOTE:
If DTC P0122 or P0123 is displayed with DTC P1229, first perform the trouble diagnosis for DTC P1229. Refer to EC-1471, "DTC P1229 SENSOR POWER SUPPLY" .

DTC No.	Trouble diagnosis name	DTC detecting condition	Possible cause
P0122 0122	Throttle position sensor 2 circuit low input	An excessively low voltage from the TP sensor 2 is sent to ECM.	● Harness or connectors (TP sensor 2 circuit is open or shorted.) ● Electric throttle control actuator (TP sensor 2)
P0123 0123	Throttle position sensor 2 circuit high input	An excessively high voltage from the TP sensor 2 is sent to ECM.	

FAIL-SAFE MODE

When the malfunction is detected, ECM enters fail-safe mode and the MI lights up.

Engine operation condition in fail-safe mode
The ECM controls the electric throttle control actuator in regulating the throttle opening in order for the idle position to be within +10 degrees. The ECM regulates the opening speed of the throttle valve to be slower than the normal condition. So, the acceleration will be poor.

DTC Confirmation Procedure

BBS004MG

NOTE:
If DTC Confirmation Procedure has been previously conducted, always turn ignition switch OFF and wait at least 10 seconds before conducting the next test.
TESTING CONDITION:
Before performing the following procedure, confirm that battery voltage is more than 10V at idle.

WITH CONSULT-II

1. Turn ignition switch ON.
2. Select “DATA MONITOR” mode with CONSULT-II.
3. Start engine and let it idle for 1 second.
4. If DTC is detected, go to EC-1370, "Diagnostic Procedure" .

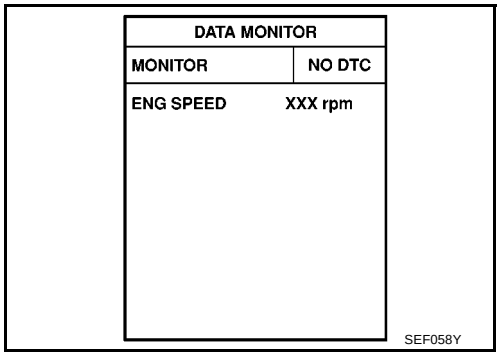

WITHOUT CONSULT-II

1. Start engine and let it idle for 1 second.
2. Turn ignition switch OFF, wait at least 10 seconds and then turn ON.
3. Perform Diagnostic Test Mode II (Self-diagnostic results) with ECM.
4. If DTC is detected, go to EC-1370, "Diagnostic Procedure" .

Wiring Diagram

BBS004MH

EC-TPS2-01

: DETECTABLE LINE FOR DTC
: NON-DETECTABLE LINE FOR DTC

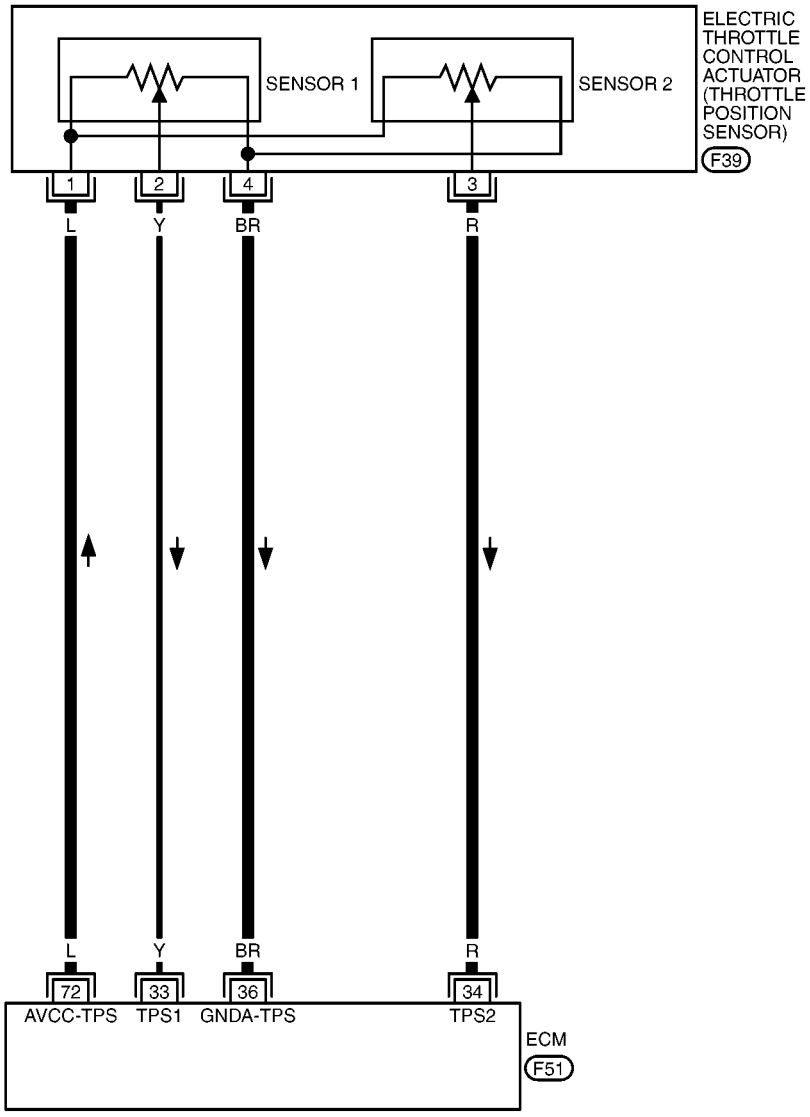

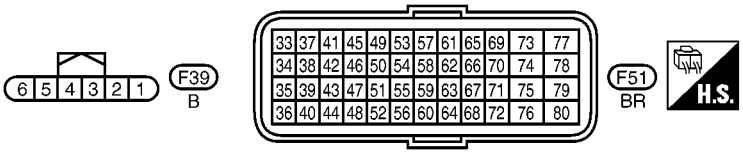

MBWA1460E

Specification data are reference values and are measured between each terminal and ground.

CAUTION:

Do not use ECM ground terminals when measuring input/output voltage. Doing so may result in damage to the ECM's transistor. Use a ground other than ECM terminals, such as the ground.

TERMINAL NO.	WIRE COLOR	ITEM	CONDITION	DATA (DC Voltage)
33	Y	Throttle position sensor 1	**[Ignition switch: ON]** ● Engine stopped ● Shift lever: D (A/T), 1st (M/T) ● Accelerator pedal: Fully released	More than 0.36V
			[Ignition switch: ON] ● Engine stopped ● Shift lever: D (A/T), 1st (M/T) ● Accelerator pedal: Fully depressed	Less than 4.75V
34	R	Throttle position sensor 2	**[Ignition switch: ON]** ● Engine stopped ● Shift lever: D (A/T), 1st (M/T) ● Accelerator pedal: Fully released	Less than 4.75V
			[Ignition switch: ON] ● Engine stopped ● Shift lever: D (A/T), 1st (M/T) ● Accelerator pedal: Fully depressed	More than 0.36V
36	BR	Sensor ground (Throttle position sensor)	**[Engine is running]** ● **Warm-up condition** ● Idle speed	Approximately 0V
72	L	Sensor power supply (Throttle position sensor)	**[Ignition switch: ON]**	Approximately 5V

Diagnostic Procedure

BBS004MI

1. CHECK GROUND CONNECTIONS

1. Turn ignition switch OFF.
2. Loosen and retighten ground screws on the body.
   Refer to EC-1342, "Ground Inspection" .

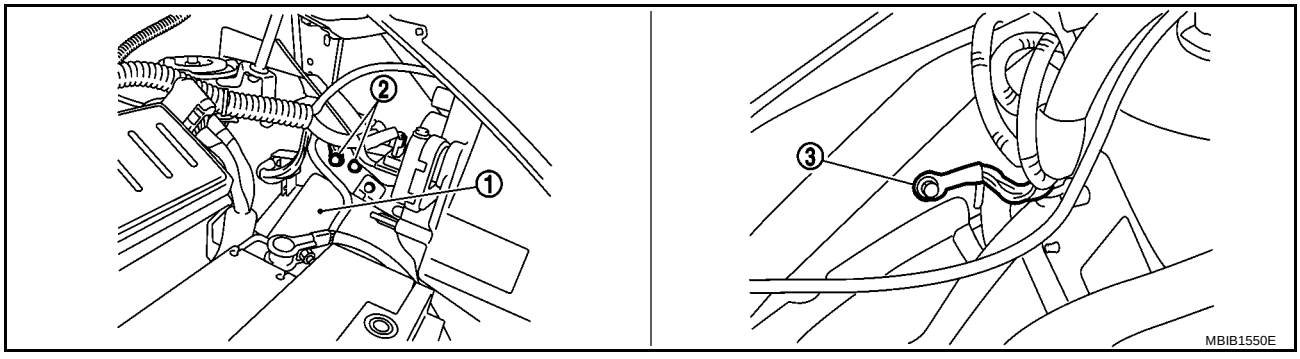

1. IPDM E/R
2. Body ground
3. Body ground

OK or NG

OK >> GO TO 2.
NG >> Repair or replace ground connections.

2. CHECK THROTTLE POSITION SENSOR 2 POWER SUPPLY CIRCUIT

1. Disconnect electric throttle control actuator (1) harness connector.

– ⇦: Vehicle front

2. Turn ignition switch ON.

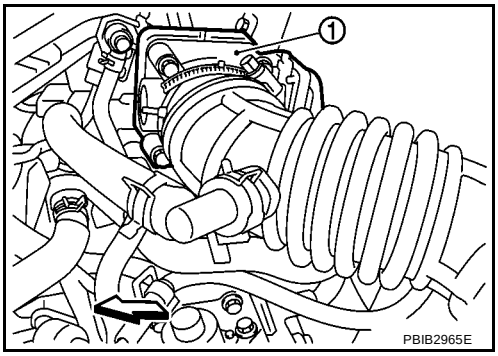

3. Check voltage between electric throttle control actuator terminal 1 and ground with CONSULT-II or tester.

Voltage: Approximately 5V

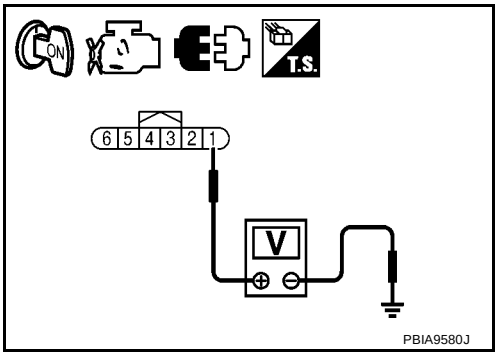

OK or NG

OK >> GO TO 3.
NG >> Repair open circuit or short to ground or short to power in harness or connectors.

3. CHECK THROTTLE POSITION SENSOR 2 GROUND CIRCUIT FOR OPEN AND SHORT

1. Turn ignition switch OFF.
2. Disconnect ECM harness connector.
3. Check harness continuity between electric throttle control actuator terminal 4 and ECM terminal 36. Refer to Wiring Diagram.

Continuity should exist.

4. Also check harness for short to ground and short to power.

OK or NG

OK >> GO TO 4.
NG >> Repair open circuit or short to ground or short to power in harness or connectors.

4. CHECK THROTTLE POSITION SENSOR 2 INPUT SIGNAL CIRCUIT FOR OPEN AND SHORT

1. Check harness continuity between ECM terminal 34 and electric throttle control actuator terminal 3. Refer to Wiring Diagram.

Continuity should exist.

2. Also check harness for short to ground and short to power.

OK or NG

OK >> GO TO 5.
NG >> Repair open circuit or short to ground or short to power in harness or connectors.

5. CHECK THROTTLE POSITION SENSOR

Refer to EC-1372, "Component Inspection" .

OK or NG

OK >> GO TO 7.
NG >> GO TO 6.

6. REPLACE ELECTRIC THROTTLE CONTROL ACTUATOR

1. Replace the electric throttle control actuator.
2. Perform EC-1279, "Throttle Valve Closed Position Learning" .
3. Perform EC-1279, "Idle Air Volume Learning" .

>> **INSPECTION END**

7. CHECK INTERMITTENT INCIDENT

Refer to EC-1336, "TROUBLE DIAGNOSIS FOR INTERMITTENT INCIDENT" .

>> **INSPECTION END**

Component Inspection

BBS004MJ

THROTTLE POSITION SENSOR

1. Reconnect all harness connectors disconnected.
2. Perform EC-1279, "Throttle Valve Closed Position Learning" .
3. Turn ignition switch ON.
4. Set shift lever to D position (A/T) or 1st position (M/T).
5. Check voltage between ECM terminals 33 (TP sensor 1 signal), 34 (TP sensor 2 signal) and ground under the following conditions.

Terminal	Accelerator pedal	Voltage
33 (Throttle position sensor 1)	Fully released	More than 0.36V
	Fully depressed	Less than 4.75V
34 (Throttle position sensor 2)	Fully released	Less than 4.75V
	Fully depressed	More than 0.36V

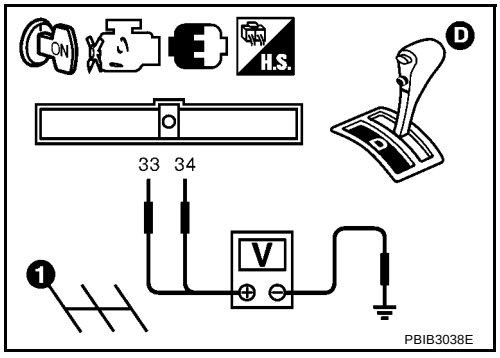

6. If NG, replace electric throttle control actuator and go to the next step.
7. Perform EC-1279, "Throttle Valve Closed Position Learning" .
8. Perform EC-1279, "Idle Air Volume Learning" .

Removal and Installation

BBS004MK

ELECTRIC THROTTLE CONTROL ACTUATOR

Refer to EM-120, "INTAKE MANIFOLD" .

DTC P0132 HO2S1

PFP:22690

Component Description

BBS004ML

The heated oxygen sensor 1 is placed into the exhaust manifold. It detects the amount of oxygen in the exhaust gas compared to the outside air. The heated oxygen sensor 1 has a closed-end tube made of ceramic zirconia. The zirconia generates voltage from approximately 1V in richer conditions to 0V in leaner conditions. The heated oxygen sensor 1 signal is sent to the ECM. The ECM adjusts the injection pulse duration to achieve the ideal air-fuel ratio. The ideal air-fuel ratio occurs near the radical change from 1V to 0V.

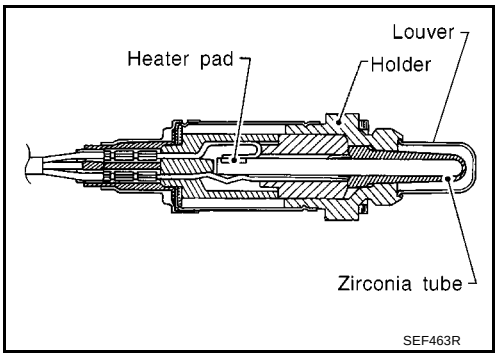

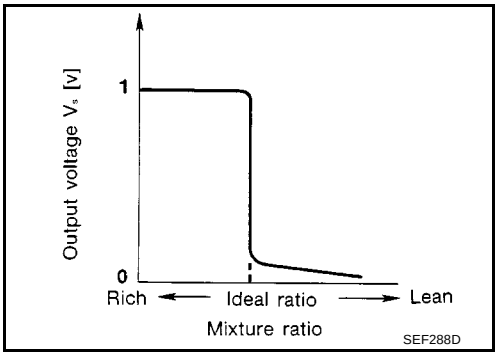

CONSULT-II Reference Value in Data Monitor Mode

BBS004MM

Specification data are reference values.

MONITOR ITEM	CONDITION		SPECIFICATION
HO2S1 (B1)	● Engine: After warming up	Maintaining engine speed at 2,000 rpm.	0 - 0.3V ←→ Approx. 0.6 - 1.0V
HO2S1 MNTR (B1)			LEAN ←→ RICH Changes more than 5 times during 10 seconds.

On Board Diagnosis Logic

BBS004MN

To judge the malfunction, the diagnosis checks that the heated oxygen sensor 1 output is not inordinately high.

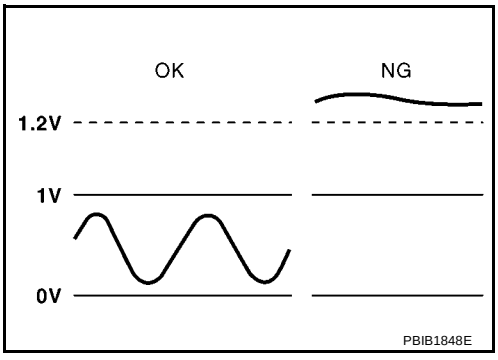

DTC No.	Trouble diagnosis name	DTC detecting condition	Possible cause
P0132 0132	Heated oxygen sensor 1 circuit high voltage	An excessively high voltage from the sensor is sent to ECM.	● Harness or connectors (The sensor circuit is open or shorted.) ● Heated oxygen sensor 1

DTC Confirmation Procedure

BBS004MO

NOTE:
If DTC Confirmation Procedure has been previously conducted, always turn ignition switch OFF and wait at least 10 seconds before conducting the next test.

WITH CONSULT-II

1. Start engine and warm it up to normal operating temperature.
2. Turn ignition switch OFF and wait at least 10 seconds.
3. Turn ignition switch ON.
4. Select “DATA MONITOR” mode with CONSULT-II.
5. Restart engine and let it idle for 2 minutes.
6. If 1st trip DTC is detected, go to EC-1376, "Diagnostic Procedure" .

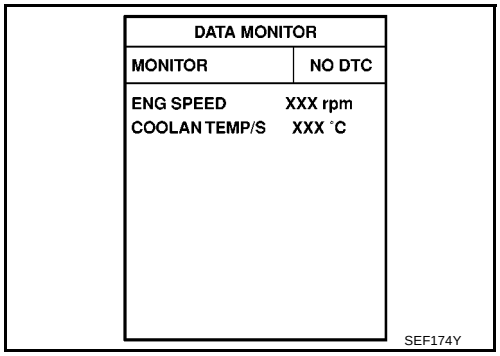

WITHOUT CONSULT-II

1. Start engine and warm it up to normal operating temperature.
2. Turn ignition switch OFF and wait at least 10 seconds.
3. Restart engine and let it idle for 2 minutes.
4. Turn ignition switch OFF and wait at least 10 seconds.
5. Perform Diagnostic Test Mode II (Self-diagnostic results) with ECM.
6. If 1st trip DTC is detected, go to EC-1376, "Diagnostic Procedure" .

Wiring Diagram

BBS004MP

EC-HO2S1-01

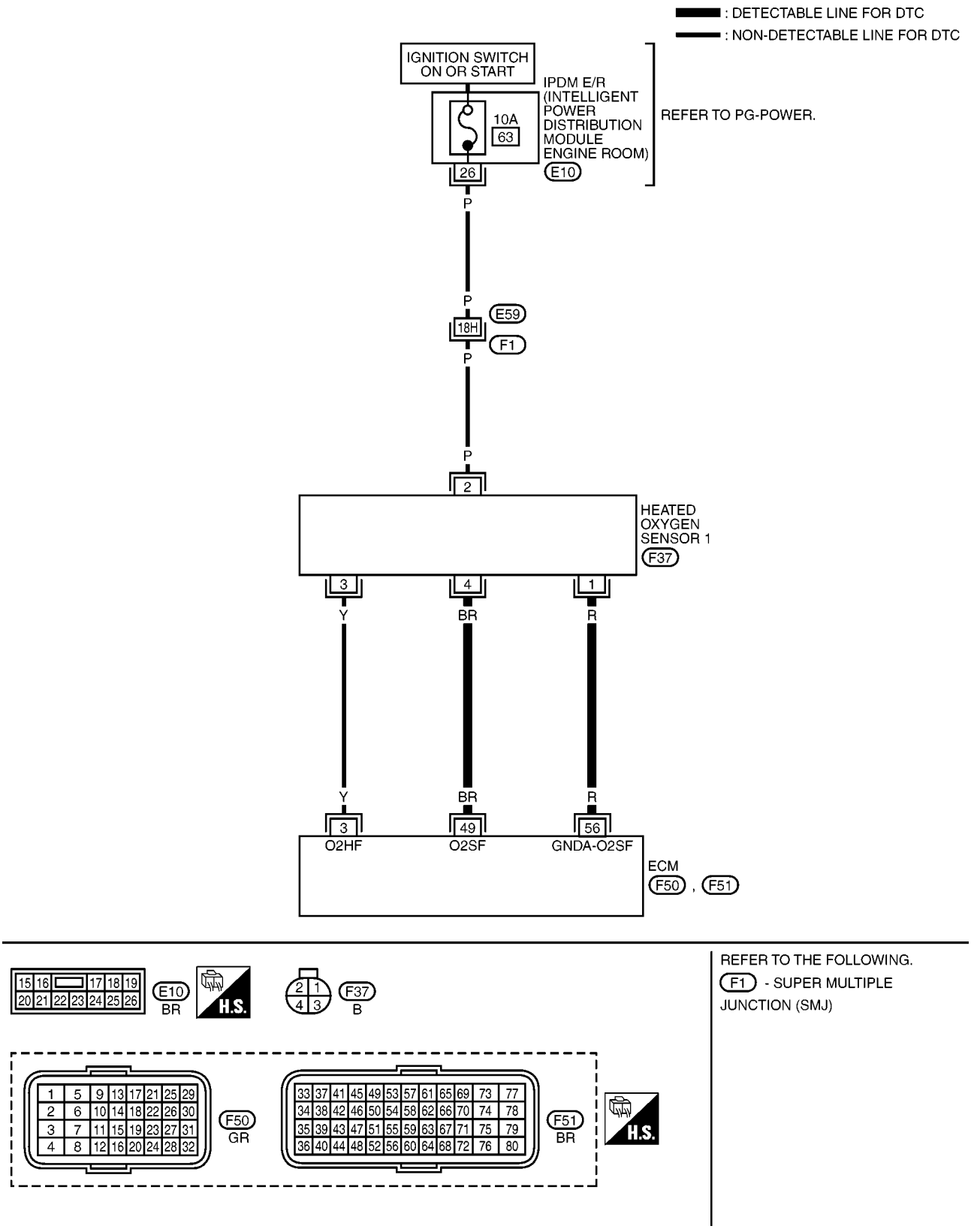

Specification data are reference values and are measured between each terminal and ground.
Pulse signal is measured by CONSULT-II.

CAUTION:
Do not use ECM ground terminals when measuring input/output voltage. Doing so may result in damage to the ECM's transistor. Use a ground other than ECM terminals, such as the ground.

TERMINAL NO.	WIRE COLOR	ITEM	CONDITION	DATA (DC Voltage)
3	Y	Heated oxygen sensor 1 heater	**[Engine is running]** ● **Warm-up condition** ● Engine speed: Below 3,600 rpm	Approximately 10V★ 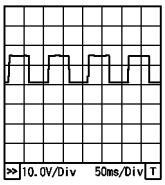 PBIA8148J
			[Ignition switch: ON] ● Engine stopped **[Engine is running]** ● Engine speed: Above 3,600 rpm	BATTERY VOLTAGE (11 - 14V)
49	BR	Heated oxygen sensor 1	**[Engine is running]** ● **Warm-up condition** ● Engine speed: 2,000 rpm	0 - Approximately 1.0V (Periodically change)
56	R	Sensor ground (Heated oxygen sensor 1)	**[Engine is running]** ● Idle speed	Approximately 0V

★: Average voltage for pulse signal (Actual pulse signal can be confirmed by oscilloscope.)

Diagnostic Procedure

BBS004MQ

1. CHECK GROUND CONNECTIONS

1. Turn ignition switch OFF.
2. Loosen and retighten ground screws on the body.
   Refer to EC-1342, "Ground Inspection" .

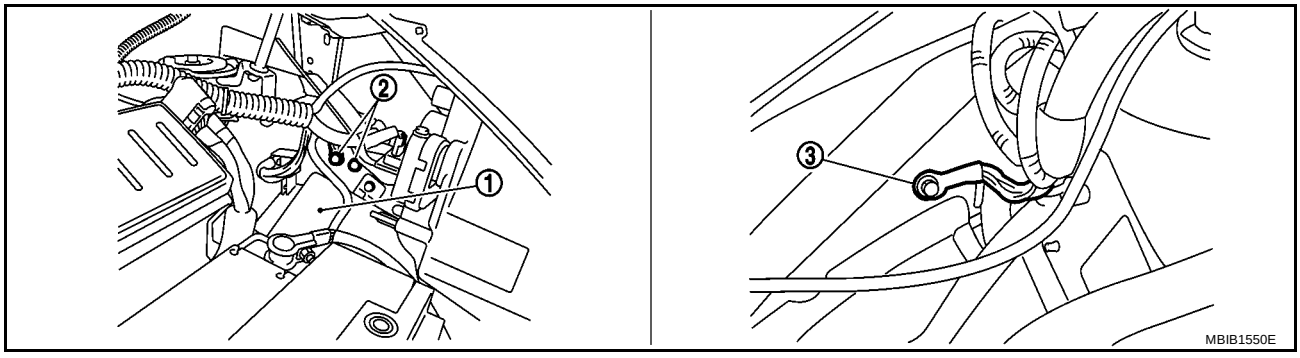

1. IPDM E/R
2. Body ground
3. Body ground

OK or NG

OK >> GO TO 2.
NG >> Repair or replace ground connections.

2. RETIGHTEN HEATED OXYGEN SENSOR 1

Loosen and retighten heated oxygen sensor 1 (1).

- ⇦: Vehicle front
- Exhaust manifold (2)

Tightening torque: 50 N·m (5.1 kg-m, 37 ft-lb)

>> GO TO 3.

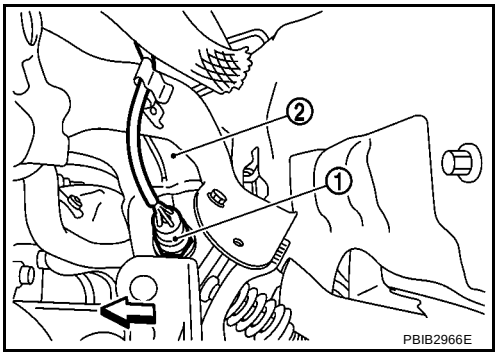

3. CHECK HO2S1 GROUND CIRCUIT FOR OPEN AND SHORT

1. Disconnect heated oxygen sensor 1 harness connector (1).
- ⇦: Vehicle front
2. Disconnect ECM harness connector.
3. Check harness continuity between HO2S1 terminal 1 and ECM terminal 56.
   Refer to Wiring Diagram.

   Continuity should exist.

4. Also check harness for short to ground and short to power.

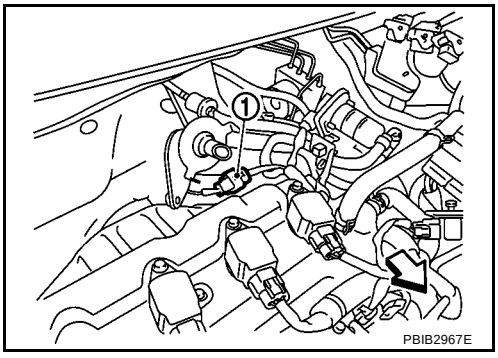

OK or NG

OK >> GO TO 4.
NG >> Repair open circuit or short to ground or short to power in harness or connectors.

4. CHECK HO2S1 INPUT SIGNAL CIRCUIT FOR OPEN AND SHORT

1. Check harness continuity between HO2S1 terminal 4 and ECM terminal 49.
   Refer to Wiring Diagram.

   Continuity should exist.

2. Check harness continuity between ECM terminal 49 or HO2S1 terminal 4 and ground.
   Refer to Wiring Diagram.

   Continuity should not exist.

3. Also check harness for short to power.

OK or NG

OK >> GO TO 5.
NG >> Repair open circuit or short to ground or short to power in harness or connectors.

5. CHECK HO2S1 CONNECTOR FOR WATER

Check heated oxygen sensor 1 connector for water.

Water should not exist.

OK or NG

OK >> GO TO 6.
NG >> Repair or replace harness or connectors.

6. CHECK HEATED OXYGEN SENSOR 1

Refer to EC-1379, "Component Inspection" .

OK or NG

OK >> GO TO 7.
NG >> Replace heated oxygen sensor 1.

7. CHECK INTERMITTENT INCIDENT

Refer to EC-1336, "TROUBLE DIAGNOSIS FOR INTERMITTENT INCIDENT" .

>> **INSPECTION END**

Component Inspection

BBS004MR

HEATED OXYGEN SENSOR 1

With CONSULT-II

1. Start engine and warm it up to normal operating temperature.
2. Select “MANU TRIG” and adjust “TRIGGER POINT” to 100% in “DATA MONITOR” mode with CONSULT-II.
3. Select “HO2S1 (B1)” and “HO2S1 MNTR (B1)”.
4. Hold engine speed at 2,000 rpm under no load during the following steps.
5. Touch “RECORD” on CONSULT-II screen.

DATA MONITOR	
MONITOR	NO DTC
ENG SPEED	XXX rpm
MAS A/F SE-B1	XXX V
COOLAN TEMP/S	XXX °C
HO2S1 (B1)	XXX V
HO2S1 MNTR (B1)	LEAN

SEF646Y

6. Check the following.
   - “HO2S1 MNTR (B1)” in “DATA MONITOR” mode changes from “RICH” to “LEAN” to “RICH” more than 5 times in 10 seconds.
     5 times (cycles) are counted as shown in the figure.
   - “HO2S1 (B1)” voltage goes above 0.6V at least once.
   - “HO2S1 (B1)” voltage goes below 0.3V at least once.
   - “HO2S1 (B1)” voltage never exceeds 1.0V.

cycle	1	2	3	4	5
HO2S1 MNTR (B1)	R-L-R-L-R-L-R-L-R-L-R				

R means HO2S1 MNTR (B1) indicates RICH
L means HO2S1 MNTR (B1) indicates LEAN

SEF217YA

Trigger	ENG SPEED	HO2S1 (B1)
	rpm	V
XXX	XXX	XXX
XXX	XXX	XXX
XXX	XXX	XXX
XXX	XXX	XXX
XXX	XXX	XXX
XXX	XXX	XXX
XXX	XXX	XXX
XXX	XXX	XXX
XXX	XXX	XXX
XXX	XXX	XXX
XXX	XXX	XXX
XXX	XXX	XXX

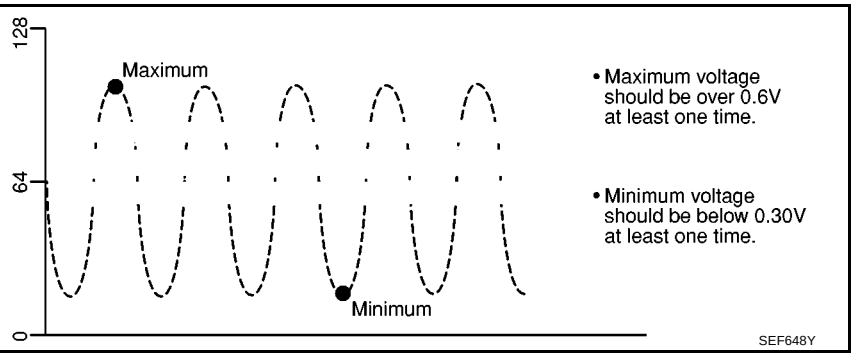

CAUTION:

- **Discard any heated oxygen sensor which has been dropped from a height of more than 0.5 m (19.7 in) onto a hard surface such as a concrete floor; use a new one.**
- **Before installing new oxygen sensor, clean exhaust system threads using Oxygen Sensor Thread Cleaner tool and approved anti-seize lubricant.**

Without CONSULT-II

1. Start engine and warm it up to normal operating temperature.
2. Set voltmeter probes between ECM terminal 49 (HO2S1 signal) and ground.

3. Check the following with engine speed held at 2,000 rpm constant under no load.
   - The voltage fluctuates between 0 to 0.3V and 0.6 to 1.0V more than 5 times within 10 seconds.
   - The maximum voltage is over 0.6V at least 1 time.
   - The minimum voltage is below 0.3V at least 1 time.
   - The voltage never exceeds 1.0V.

   1 time: 0 - 0.3V → 0.6 - 1.0V → 0 - 0.3V
   2 times: 0 - 0.3V → 0.6 - 1.0V → 0 - 0.3V → 0.6 - 1.0V → 0 - 0.3V

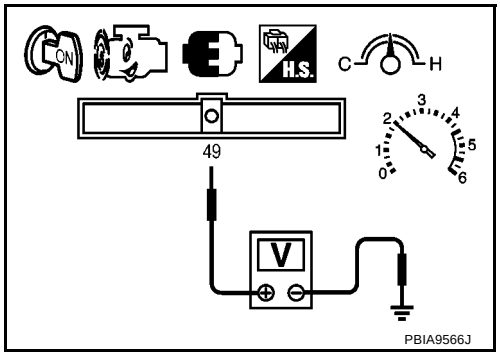

CAUTION:

- **Discard any heated oxygen sensor which has been dropped from a height of more than 0.5 m (19.7 in) onto a hard surface such as a concrete floor; use a new one.**
- **Before installing new oxygen sensor, clean exhaust system threads using Oxygen Sensor Thread Cleaner tool and approved anti-seize lubricant.**

Removal and Installation

BBS004MS

HEATED OXYGEN SENSOR 1

Refer to EM-124, "EXHAUST MANIFOLD" .

DTC P0134 HO2S1

PFP:22690

Component Description

BBS004MT

The heated oxygen sensor 1 is placed into the exhaust manifold. It detects the amount of oxygen in the exhaust gas compared to the outside air. The heated oxygen sensor 1 has a closed-end tube made of ceramic zirconia. The zirconia generates voltage from approximately 1V in richer conditions to 0V in leaner conditions. The heated oxygen sensor 1 signal is sent to the ECM. The ECM adjusts the injection pulse duration to achieve the ideal air-fuel ratio. The ideal air-fuel ratio occurs near the radical change from 1V to 0V.

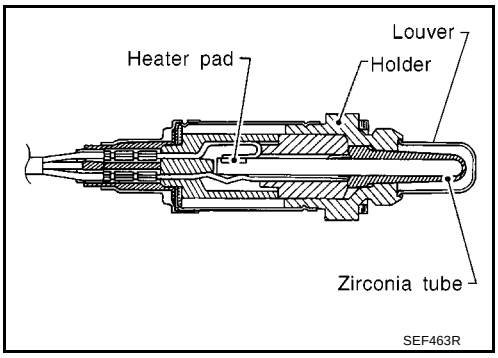

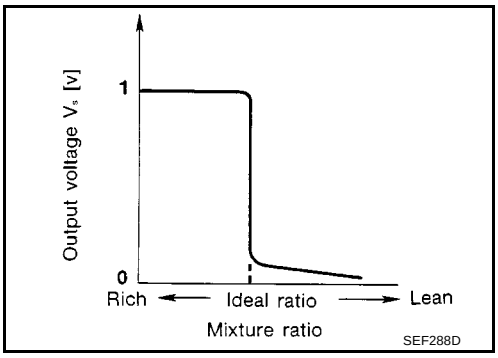

CONSULT-II Reference Value in Data Monitor Mode

BBS004MU

Specification data are reference values.

MONITOR ITEM	CONDITION		SPECIFICATION
HO2S1 (B1)	● Engine: After warming up	Maintaining engine speed at 2,000 rpm.	0 - 0.3V ←→ Approx. 0.6 - 1.0V
HO2S1 MNTR (B1)			LEAN ←→ RICH Changes more than 5 times during 10 seconds.

On Board Diagnosis Logic

BBS004MV

Under the condition in which the heated oxygen sensor 1 signal is not input, the ECM circuits will read a continuous approximately 0.3V. Therefore, for this diagnosis, the time that output voltage is within 200 to 400 mV range is monitored, and the diagnosis checks that this time is not inordinately long.

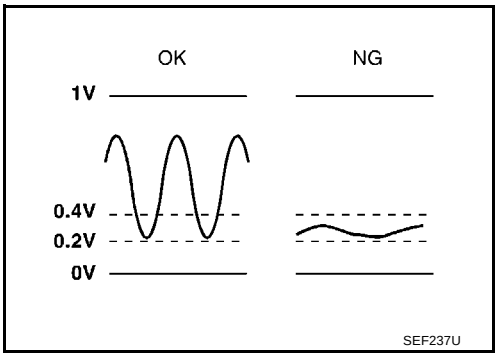

DTC No.	Trouble diagnosis name	DTC detecting condition	Possible cause
P0134 0134	Heated oxygen sensor 1 circuit no activity detected	The voltage from the sensor is constantly approx. 0.3V.	● Harness or connectors (The sensor circuit is open or shorted.) ● Heated oxygen sensor 1

Overall Function Check

BBS004MW

Use this procedure to check the overall function of the heated oxygen sensor 1 circuit. During this check, a 1st trip DTC might not be confirmed.

WITH CONSULT-II

1. Start engine and warm it up to normal operating temperature.
2. Select “MANU TRIG” in “DATA MONITOR” mode with CONSULT-II, and select “HO2S1 (B1)”.
3. Hold engine speed at 2,000 rpm under no load.
4. Make sure that the indications do not remain in the range between 0.2V to 0.4V.
5. If NG, go to EC-1384, "Diagnostic Procedure" .

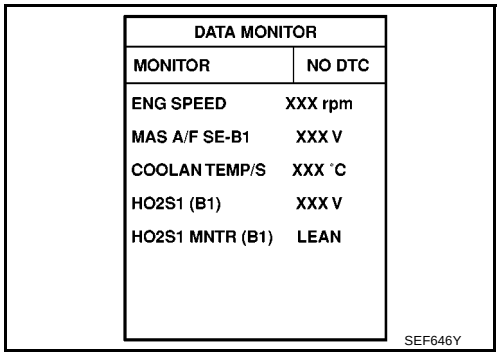

DATA MONITOR	
MONITOR	NO DTC
ENG SPEED	XXX rpm
MAS A/F SE-B1	XXX V
COOLAN TEMP/S	XXX °C
HO2S1 (B1)	XXX V
HO2S1 MNTR (B1)	LEAN

SEF646Y

WITHOUT CONSULT-II

1. Start engine and warm it up to normal operating temperature.
2. Set voltmeter probes between ECM terminal 49 (HO2S1 signal) and ground.
3. Check the following with engine speed held at 2,000 rpm constant under no load.

- The voltage does not remain in the range of 0.2 to 0.4V.

4. If NG, go to EC-1384, "Diagnostic Procedure" .

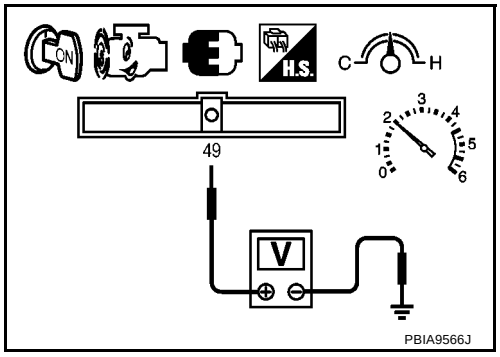

PBIA9566J

Wiring Diagram

BBS004MX

EC-HO2S1-01

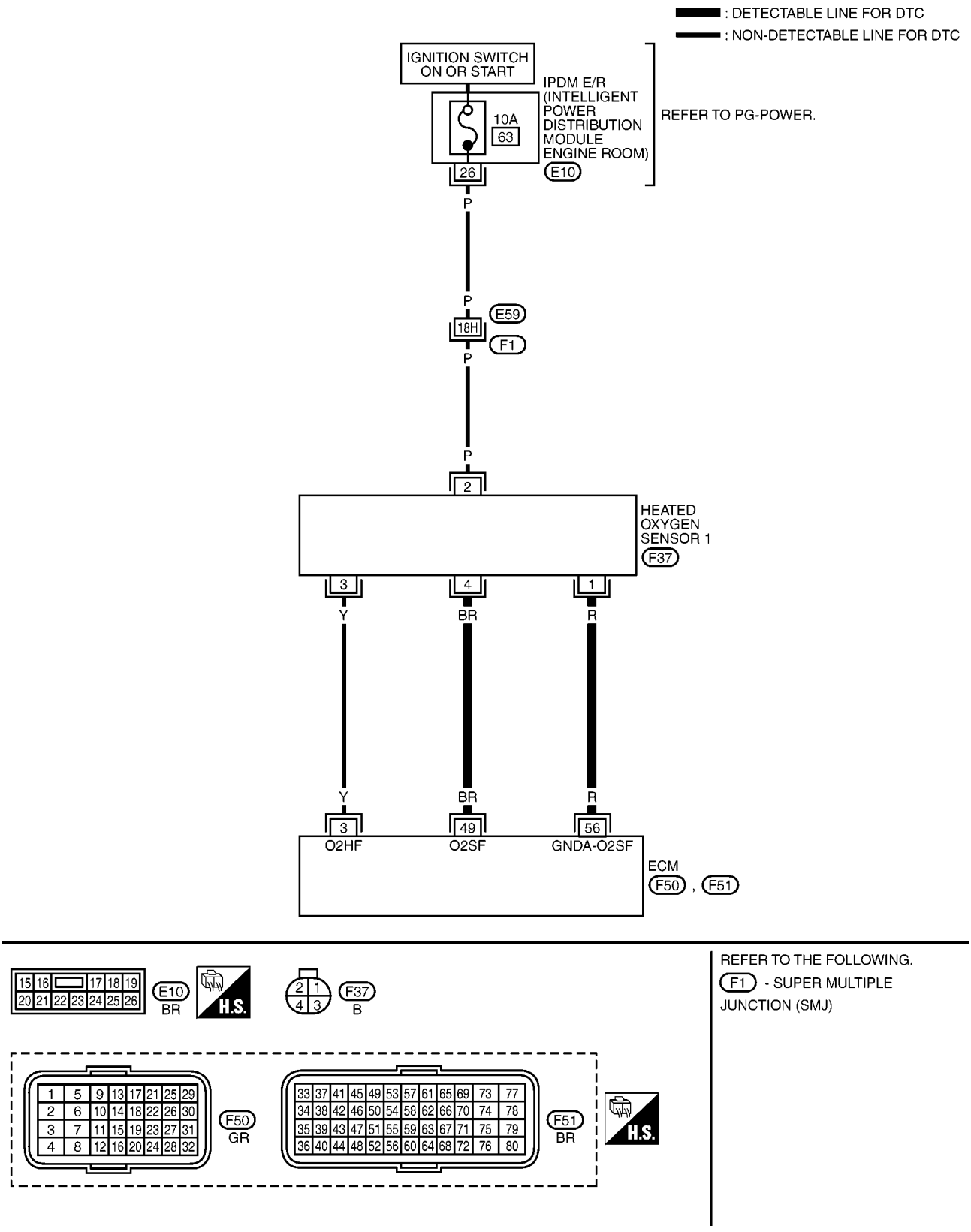

MBWA1461E

Specification data are reference values and are measured between each terminal and ground.
Pulse signal is measured by CONSULT-II.

CAUTION:
Do not use ECM ground terminals when measuring input/output voltage. Doing so may result in damage to the ECM's transistor. Use a ground other than ECM terminals, such as the ground.

TERMINAL NO.	WIRE COLOR	ITEM	CONDITION	DATA (DC Voltage)
3	Y	Heated oxygen sensor 1 heater	**[Engine is running]** ● **Warm-up condition** ● Engine speed: Below 3,600 rpm	Approximately 10V★ 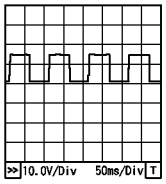 PBIA8148J
			[Ignition switch: ON] ● Engine stopped **[Engine is running]** ● Engine speed: Above 3,600 rpm	BATTERY VOLTAGE (11 - 14V)
49	BR	Heated oxygen sensor 1	**[Engine is running]** ● **Warm-up condition** ● Engine speed: 2,000 rpm	0 - Approximately 1.0V (Periodically change)
56	R	Sensor ground (Heated oxygen sensor 1)	**[Engine is running]** ● **Warm-up condition** ● Idle speed	Approximately 0V

★: Average voltage for pulse signal (Actual pulse signal can be confirmed by oscilloscope.)

Diagnostic Procedure

BBS004MY

1. CHECK GROUND CONNECTIONS

1. Turn ignition switch OFF.
2. Loosen and retighten ground screws on the body.
   Refer to EC-1342, "Ground Inspection" .

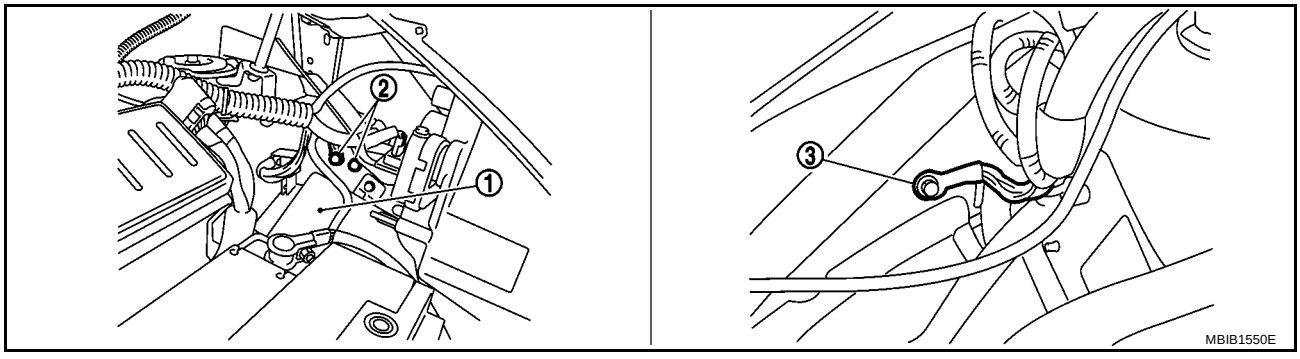

1. IPDM E/R
2. Body ground
3. Body ground

OK or NG

OK >> GO TO 2.
NG >> Repair or replace ground connections.

2. CHECK HO2S1 GROUND CIRCUIT FOR OPEN AND SHORT

1. Disconnect heated oxygen sensor 1 harness connector (1).
- ⇦: Vehicle front
2. Disconnect ECM harness connector.
3. Check harness continuity between HO2S1 terminal 1 and ECM terminal 56.
   Refer to Wiring Diagram.

   Continuity should exist.

4. Also check harness for short to ground and short to power.

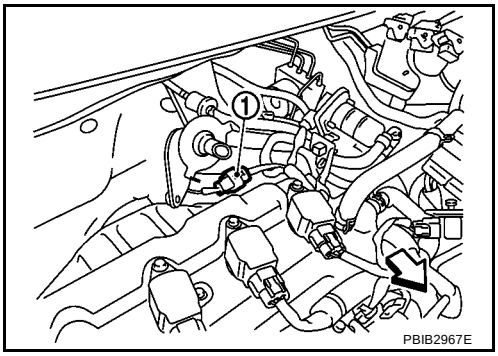

OK or NG

OK >> GO TO 3.
NG >> Repair open circuit or short to ground or short to power in harness or connectors.

3. CHECK HO2S1 INPUT SIGNAL CIRCUIT FOR OPEN AND SHORT

1. Check harness continuity between HO2S1 terminal 4 and ECM terminal 49.
   Refer to Wiring Diagram.

   Continuity should exist.

2. Check harness continuity between ECM terminal 49 or HO2S1 terminal 4 and ground.
   Refer to Wiring Diagram.

   Continuity should not exist.

3. Also check harness for short to power.

OK or NG

OK >> GO TO 4.
NG >> Repair open circuit or short to ground or short to power in harness or connectors.

4. CHECK HEATED OXYGEN SENSOR 1

Refer to EC-1385, "Component Inspection" .

OK or NG

OK >> GO TO 5.
NG >> Replace heated oxygen sensor 1.

5. CHECK INTERMITTENT INCIDENT

Refer to EC-1336, "TROUBLE DIAGNOSIS FOR INTERMITTENT INCIDENT" .

>> **INSPECTION END**

Component Inspection

BBS004MZ

HEATED OXYGEN SENSOR 1

With CONSULT-II

1. Start engine and warm it up to normal operating temperature.
2. Select “MANU TRIG” and adjust “TRIGGER POINT” to 100% in “DATA MONITOR” mode with CONSULT-II.

3. Select “HO2S1 (B1)” and “HO2S1 MNTR (B1)”.
4. Hold engine speed at 2,000 rpm under no load during the following steps.
5. Touch “RECORD” on CONSULT-II screen.

DATA MONITOR	
MONITOR	NO DTC
ENG SPEED	XXX rpm
MAS A/F SE-B1	XXX V
COOLAN TEMP/S	XXX °C
HO2S1 (B1)	XXX V
HO2S1 MNTR (B1)	LEAN

SEF646Y

6. Check the following.
   - “HO2S1 MNTR (B1)” in “DATA MONITOR” mode changes from “RICH” to “LEAN” to “RICH” more than 5 times in 10 seconds.
     5 times (cycles) are counted as shown in the figure.
   - “HO2S1 (B1)” voltage goes above 0.6V at least once.
   - “HO2S1 (B1)” voltage goes below 0.3V at least once.
   - “HO2S1 (B1)” voltage never exceeds 1.0V.

cycle	1	2	3	4	5
HO2S1 MNTR (B1)	R-L-R-L-R-L-R-L-R-L-R				

R means HO2S1 MNTR (B1) indicates RICH
L means HO2S1 MNTR (B1) indicates LEAN

SEF217YA

Trigger	ENG SPEED	HO2S1 (B1)
	rpm	V
XXX	XXX	XXX
XXX	XXX	XXX
XXX	XXX	XXX
XXX	XXX	XXX
XXX	XXX	XXX
XXX	XXX	XXX
XXX	XXX	XXX
XXX	XXX	XXX
XXX	XXX	XXX
XXX	XXX	XXX
XXX	XXX	XXX
XXX	XXX	XXX

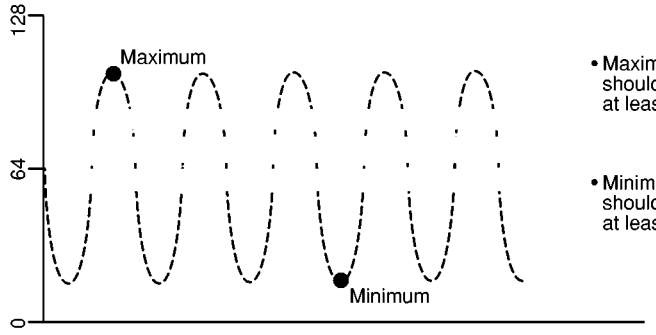

- Maximum voltage should be over 0.6V at least one time.
- Minimum voltage should be below 0.30V at least one time.

SEF648Y

CAUTION:
- **Discard any heated oxygen sensor which has been dropped from a height of more than 0.5 m (19.7 in) onto a hard surface such as a concrete floor; use a new one.**
- **Before installing new oxygen sensor, clean exhaust system threads using Oxygen Sensor Thread Cleaner tool and approved anti-seize lubricant.**

Without CONSULT-II

1. Start engine and warm it up to normal operating temperature.
2. Set voltmeter probes between ECM terminal 49 (HO2S1 signal) and ground.
3. Check the following with engine speed held at 2,000 rpm constant under no load.
   - The voltage fluctuates between 0 to 0.3V and 0.6 to 1.0V more than 5 times within 10 seconds.
   - The maximum voltage is over 0.6V at least 1 time.
   - The minimum voltage is below 0.3V at least 1 time.
   - The voltage never exceeds 1.0V.

   1 time: 0 - 0.3V → 0.6 - 1.0V → 0 - 0.3V
   2 times: 0 - 0.3V → 0.6 - 1.0V → 0 - 0.3V → 0.6 - 1.0V → 0 - 0.3V

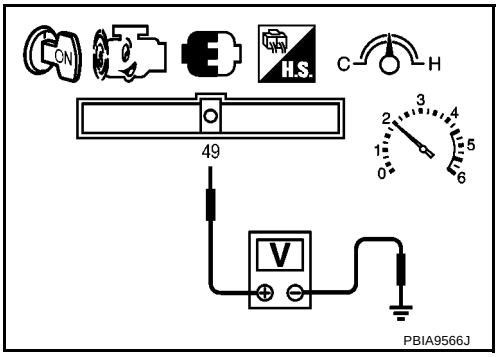

PBIA9566J

CAUTION:
- **Discard any heated oxygen sensor which has been dropped from a height of more than 0.5 m (19.7 in) onto a hard surface such as a concrete floor; use a new one.**

- **Before installing new oxygen sensor, clean exhaust system threads using Oxygen Sensor Thread Cleaner tool and approved anti-seize lubricant.**

Removal and Installation

BBS004N0

HEATED OXYGEN SENSOR 1

Refer to EM-124, "EXHAUST MANIFOLD" .

DTC P0138 HO2S2

PFP:226A0

Component Description

BBS004N1

The heated oxygen sensor 2, after three way catalyst (manifold), monitors the oxygen level in the exhaust gas.
Even if switching characteristics of the heated oxygen sensor 1 are shifted, the air-fuel ratio is controlled to stoichiometric, by the signal from the heated oxygen sensor 2.
This sensor is made of ceramic zirconia. The zirconia generates voltage from approximately 1V in richer conditions to 0V in leaner conditions.
Under normal conditions the heated oxygen sensor 2 is not used for engine control operation.

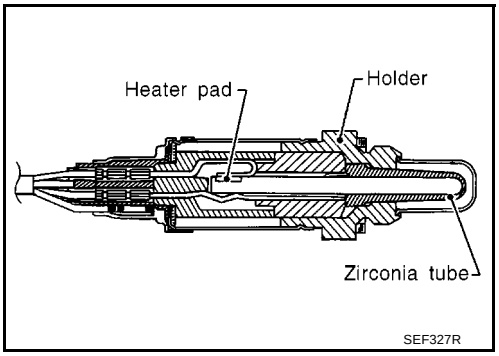

CONSULT-II Reference Value in Data Monitor Mode

BBS004N2

Specification data are reference values.

MONITOR ITEM	CONDITION	SPECIFICATION
HO2S2 (B1)	● Revving engine from idle to 3,000 rpm quickly after the following conditions are met. – Engine: After warming up. – Keep the engine speed between 3,500 rpm and 4,000 rpm for 1 minute and idle for 1 minute under no load.	0 - 0.3V ←→ Approx. 0.6 - 1.0V
HO2S2 MNTR (B1)		LEAN ←→ RICH

On Board Diagnosis Logic

BBS004N3

The heated oxygen sensor 2 has a much longer switching time between rich and lean than the heated oxygen sensor 1. The oxygen storage capacity before the three way catalyst (manifold) causes the longer switching time. To judge the malfunctions of heated oxygen sensor 2, ECM monitors whether the voltage is unusually high during the various driving condition such as fuel-cut.

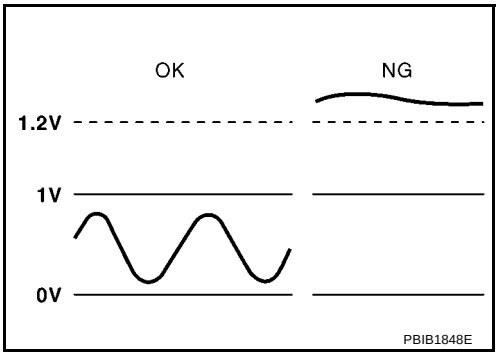

DTC No.	Trouble diagnosis name	DTC detecting condition	Possible cause
P0138 0138	Heated oxygen sensor 2 circuit high voltage	An excessively high voltage from the sensor is sent to ECM.	● Harness or connectors (The sensor circuit is open or shorted.) ● Heated oxygen sensor 2

DTC Confirmation Procedure

BBS004N4

CAUTION:
Always drive vehicle at a safe speed.

NOTE:
If DTC Confirmation Procedure has been previously conducted, always turn ignition switch OFF and wait at least 10 seconds before conducting the next test.

WITH CONSULT-II

1. Turn ignition switch ON and select “DATA MONITOR” mode with CONSULT-II.
2. Start engine and warm it up to the normal operating temperature.
3. Turn ignition switch OFF and wait at least 10 seconds.
4. Start engine and keep the engine speed between 3,500 and 4,000 rpm for at least 1 minute under no load.
5. Let engine idle for 2 minutes.
6. If 1st trip DTC is detected, go to EC-1391, "Diagnostic Procedure" .

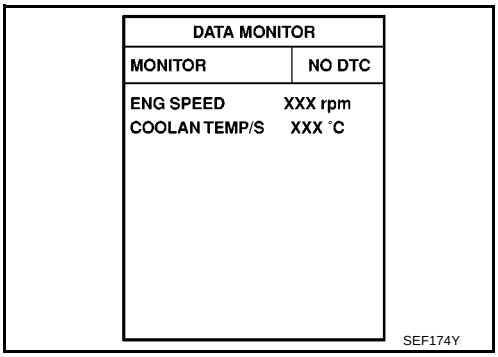

WITHOUT CONSULT-II

1. Start engine and warm it up to the normal operating temperature.
2. Turn ignition switch OFF and wait at least 10 seconds.
3. Start engine and keep the engine speed between 3,500 and 4,000 rpm for at least 1 minute under no load.
4. Let engine idle for 2 minutes.
5. Turn ignition switch OFF and wait at least 10 seconds and then turn ON.
6. Perform Diagnostic Test Mode II (Self-diagnostic results) with ECM.
7. If 1st trip DTC is detected, go to EC-1391, "Diagnostic Procedure" .

Wiring Diagram

BBS004N5

EC-HO2S2-01

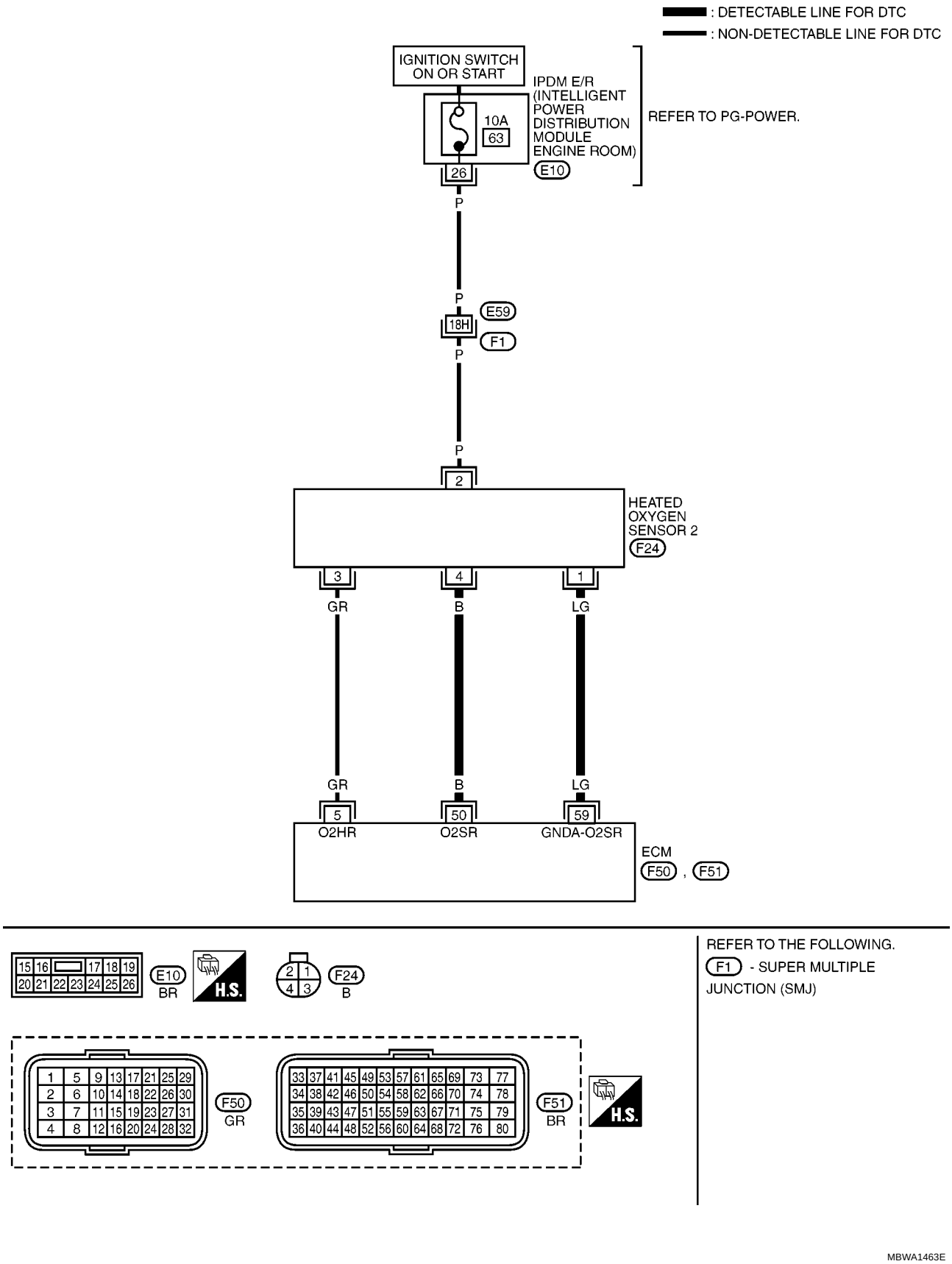

Specification data are reference values and are measured between each terminal and ground.
Pulse signal is measured by CONSULT-II.

CAUTION:
Do not use ECM ground terminals when measuring input/output voltage. Doing so may result in damage to the ECM's transistor. Use a ground other than ECM terminals, such as the ground.

TERMINAL NO.	WIRE COLOR	ITEM	CONDITION	DATA (DC Voltage)
5	GR	Heated oxygen sensor 2 heater	**[Engine is running]** ● Below 3,600 rpm after the following conditions are met. – Engine: After warming up – Keeping the engine speed between 3,500 and 4,000 rpm for 1 minute and at idle for 1 minute under no load	Approximately 10V★ 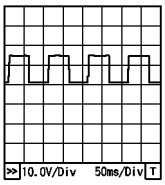 PBIA8148J
			[Ignition switch: ON] ● Engine stopped **[Engine is running]** ● Engine speed: Above 3,600 rpm	BATTERY VOLTAGE (11 - 14V)
50	B	Heated oxygen sensor 2	**[Engine is running]** ● Revving engine from idle to 3,000 rpm quickly after the following conditions are met. – Engine: After warming up – Keeping the engine speed between 3,500 and 4,000 rpm for 1 minute and at idle for 1 minute under no load.	0 - Approximately 1.0V
59	LG	Sensor ground (Heated oxygen sensor 2)	**[Engine is running]** ● **Warm-up condition** ● Idle speed	Approximately 0V

★: Average voltage for pulse signal (Actual pulse signal can be confirmed by oscilloscope.)

Diagnostic Procedure

BBS004N6

1. CHECK GROUND CONNECTIONS

1. Turn ignition switch OFF.
2. Loosen and retighten ground screws on the body.
   Refer to EC-1342, "Ground Inspection" .

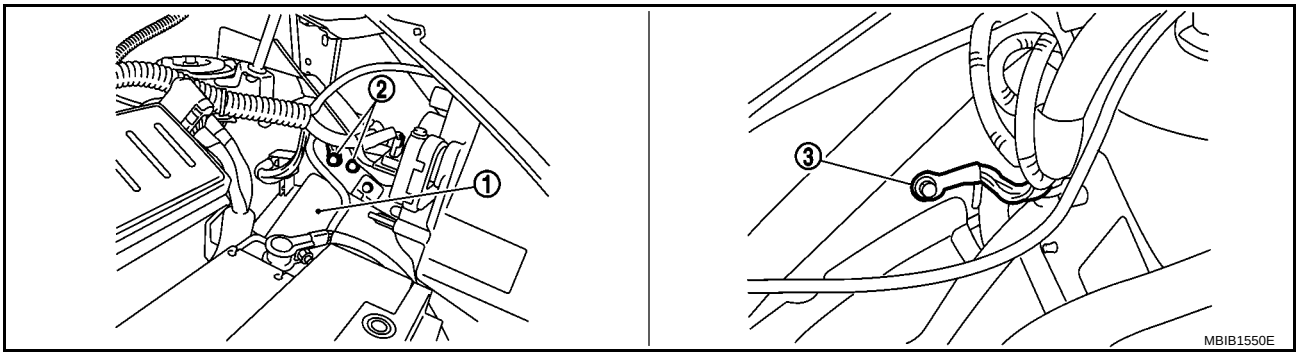

1. IPDM E/R
2. Body ground
3. Body ground

OK or NG

OK >> GO TO 2.
NG >> Repair or replace ground connections.

2. CHECK HO2S2 GROUND CIRCUIT FOR OPEN AND SHORT

1. Disconnect heated oxygen sensor 2 harness connector (2).
- Heated oxygen sensor 2 (1)
2. Disconnect ECM harness connector.
3. Check harness continuity between HO2S2 terminal 1 and ECM terminal 59.
   Refer to Wiring Diagram.

   Continuity should exist.

4. Also check harness for short to ground and short to power.

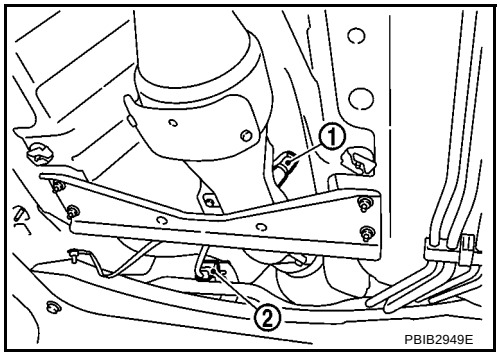

OK or NG

OK >> GO TO 3.
NG >> Repair open circuit or short to ground or short to power in harness or connectors.

3. CHECK HO2S2 INPUT SIGNAL CIRCUIT FOR OPEN AND SHORT

1. Check harness continuity between HO2S2 terminal 4 ECM terminal 50.
   Refer to Wiring Diagram.

   Continuity should exist.

2. Check harness continuity between ECM terminal 50 or HO2S2 terminal 4 and ground.
   Refer to Wiring Diagram.

   Continuity should not exist.

3. Also check harness for short to power.

OK or NG

OK >> GO TO 4.
NG >> Repair open circuit or short to ground or short to power in harness or connectors.

4. CHECK HEATED OXYGEN SENSOR 2

Refer to EC-1392, "Component Inspection" .

OK or NG

OK >> GO TO 5.
NG >> Replace heated oxygen sensor 2.

5. CHECK INTERMITTENT INCIDENT

Refer to EC-1336, "TROUBLE DIAGNOSIS FOR INTERMITTENT INCIDENT" .

>> **INSPECTION END**

Component Inspection

BBS004N7

HEATED OXYGEN SENSOR 2

With CONSULT-II

1. Start engine and warm it up to the normal operating temperature.
2. Turn ignition switch OFF and wait at least 10 seconds.
3. Start engine and keep the engine speed between 3,500 and 4,000 rpm for at least 1 minute under no load.
4. Let engine idle for 1 minute.

5. Select “FUEL INJECTION” in “ACTIVE TEST” mode, and select “HO2S2 (B1)” as the monitor item with CONSULT-II.

ACTIVE TEST	
FUEL INJECTION	25 %
MONITOR	
ENG SPEED	XXX rpm
HO2S1 (B1)	XXX V
HO2S2 (B1)	XXX V
HO2S1 MNTR (B1)	RICH
HO2S2 MNTR (B1)	RICH

SEF662Y

6. Check “HO2S2 (B1)” at idle speed when adjusting “FUEL INJECTION” to ±25%.

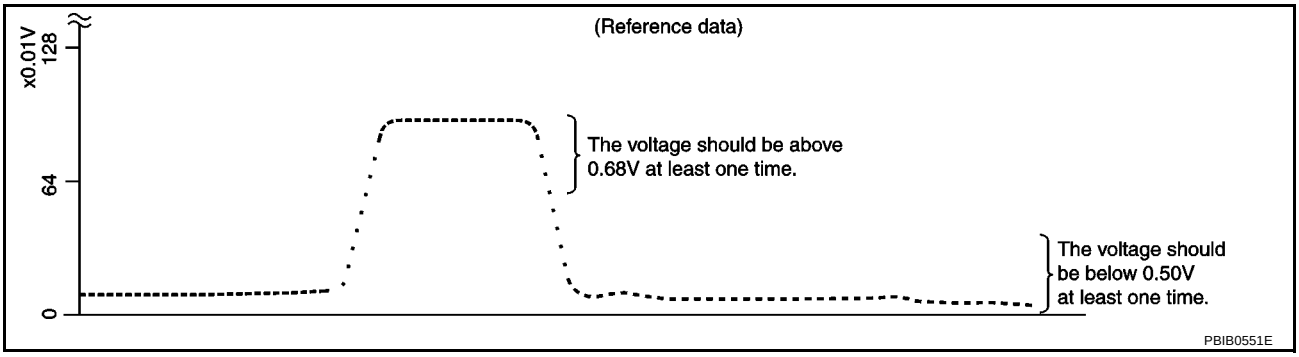

“HO2S2 (B1)” should be above 0.68V at least once when the “FUEL INJECTION” is +25%.
“HO2S2 (B1)” should be below 0.50V at least once when the “FUEL INJECTION” is –25%.

CAUTION:

- **Discard any heated oxygen sensor which has been dropped from a height of more than 0.5 m (19.7 in) onto a hard surface such as a concrete floor; use a new one.**
- **Before installing new oxygen sensor, clean exhaust system threads using Oxygen Sensor Thread Cleaner tool and approved anti-seize lubricant.**

Without CONSULT-II

1. Start engine and warm it up to the normal operating temperature.
2. Turn ignition switch OFF and wait at least 10 seconds.
3. Start engine and keep the engine speed between 3,500 and 4,000 rpm for at least 1 minute under no load.
4. Let engine idle for 1 minute.
5. Set voltmeter probes between ECM terminal 50 (HO2S2 signal) and ground.
6. Check the voltage when revving up to 4,000 rpm under no load at least 10 times.
   (Depress and release accelerator pedal as soon as possible.)
   The voltage should be above 0.68V at least once during this procedure.
   If the voltage is above 0.68V at step 6, step 7 is not necessary.
7. Keep vehicle idling for 10 minutes, then check voltage. Or check the voltage when coasting from 80 km/h (50 MPH) in D position with “OD” OFF (A/T), 3rd gear position (M/T).
   The voltage should be below 0.50V at least once during this procedure.

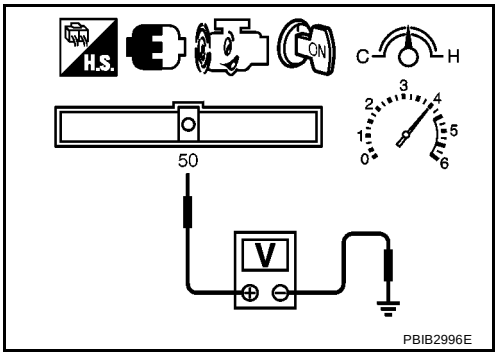

8. If NG, replace heated oxygen sensor 2.

CAUTION:

- **Discard any heated oxygen sensor which has been dropped from a height of more than 0.5 m (19.7 in) onto a hard surface such as a concrete floor; use a new one.**
- **Before installing new oxygen sensor, clean exhaust system threads using Oxygen Sensor Thread Cleaner tool and approved anti-seize lubricant.**

Removal and Installation

BBS004N8

HEATED OXYGEN SENSOR 2

Refer to EX-3, "EXHAUST SYSTEM" .

DTC P0222, P0223 TP SENSOR

PFP:16119

Component Description

BBS004N9

Electric throttle control actuator consists of throttle control motor, throttle position sensor, etc. The throttle position sensor responds to the throttle valve movement.
The throttle position sensor has the two sensors. These sensors are a kind of potentiometers which transform the throttle valve position into output voltage, and emit the voltage signal to the ECM. In addition, these sensors detect the opening and closing speed of the throttle valve and feed the voltage signals to the ECM. The ECM judges the current opening angle of the throttle valve from these signals and the ECM controls the throttle control motor to make the throttle valve opening angle properly in response to driving condition.

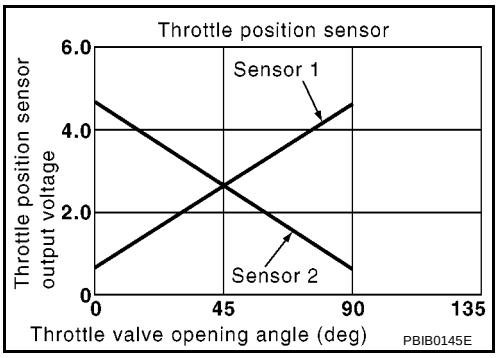

CONSULT-II Reference Value in Data Monitor Mode

BBS004NA

Specification data are reference values.

MONITOR ITEM	CONDITION		SPECIFICATION
THRTL SEN 1 THRTL SEN 2*	● Ignition switch: ON (Engine stopped) ● Shift lever: D (A/T), 1st (M/T)	Accelerator pedal: Fully released	More than 0.36V
		Accelerator pedal: Fully depressed	Less than 4.75V

*: Throttle position sensor 2 signal is converted by ECM internally. Thus, it differs from ECM terminal voltage signal.

On Board Diagnosis Logic

BBS004NB

These self-diagnoses have the one trip detection logic.

NOTE:
If DTC P0222 or P0223 is displayed with DTC P1229, first perform the trouble diagnosis for DTC P1229. Refer to EC-1471, "DTC P1229 SENSOR POWER SUPPLY" .

DTC No.	Trouble diagnosis name	DTC detecting condition	Possible cause
P0222 0222	Throttle position sensor 1 circuit low input	An excessively low voltage from the TP sensor 1 is sent to ECM.	● Harness or connectors (TP sensor 1 circuit is open or shorted.) ● Electric throttle control actuator (TP sensor 1)
P0223 0223	Throttle position sensor 1 circuit high input	An excessively high voltage from the TP sensor 1 is sent to ECM.	

FAIL-SAFE MODE

When the malfunction is detected, ECM enters fail-safe mode and the MI lights up.

Engine operation condition in fail-safe mode
The ECM controls the electric throttle control actuator in regulating the throttle opening in order for the idle position to be within +10 degrees. The ECM regulates the opening speed of the throttle valve to be slower than the normal condition. So, the acceleration will be poor.

DTC Confirmation Procedure

BBS004NC

NOTE:
If DTC Confirmation Procedure has been previously conducted, always turn ignition switch OFF and wait at least 10 seconds before conducting the next test.
TESTING CONDITION:
Before performing the following procedure, confirm that battery voltage is more than 10V at idle.

WITH CONSULT-II

1. Turn ignition switch ON.
2. Select “DATA MONITOR” mode with CONSULT-II.
3. Start engine and let it idle for 1 second.
4. If DTC is detected, go to EC-1398, "Diagnostic Procedure" .

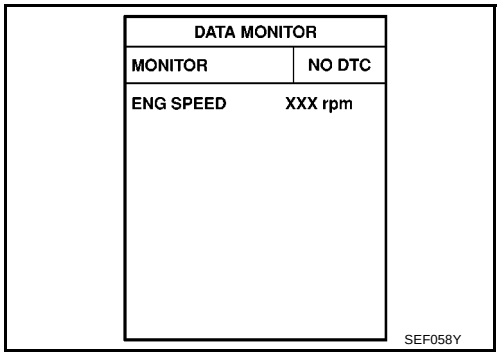

WITHOUT CONSULT-II

1. Start engine and let it idle for 1 second.
2. Turn ignition switch OFF, wait at least 10 seconds and then turn ON.
3. Perform Diagnostic Test Mode II (Self-diagnostic results) with ECM.
4. If DTC is detected, go to EC-1398, "Diagnostic Procedure" .

Wiring Diagram

BBS004ND

EC-TPS1-01

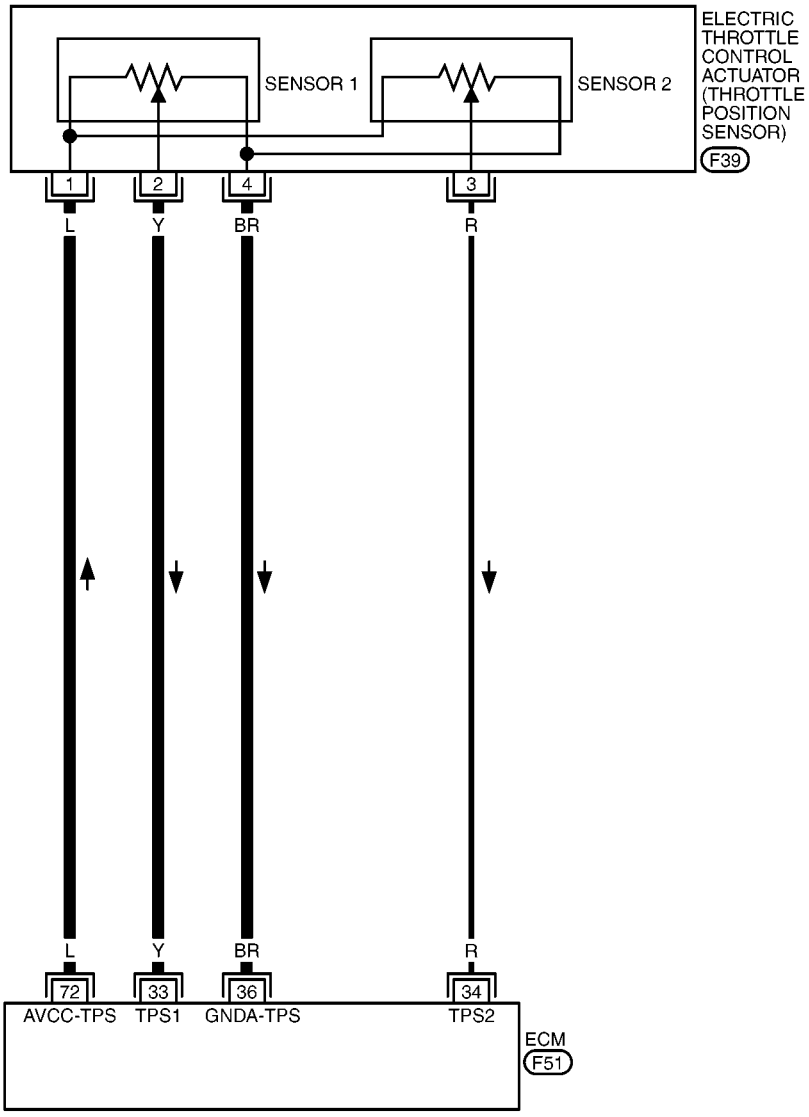

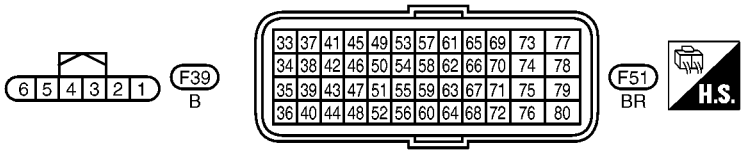

MBWA1466E

Specification data are reference values and are measured between each terminal and ground.

CAUTION:

Do not use ECM ground terminals when measuring input/output voltage. Doing so may result in damage to the ECM's transistor. Use a ground other than ECM terminals, such as the ground.

TERMINAL NO.	WIRE COLOR	ITEM	CONDITION	DATA (DC Voltage)
33	Y	Throttle position sensor 1	**[Ignition switch: ON]** ● Engine stopped ● Shift lever: D (A/T), 1st (M/T) ● Accelerator pedal: Fully released	More than 0.36V
			[Ignition switch: ON] ● Engine stopped ● Shift lever: D (A/T), 1st (M/T) ● Accelerator pedal: Fully depressed	Less than 4.75V
34	R	Throttle position sensor 2	**[Ignition switch: ON]** ● Engine stopped ● Shift lever: D (A/T), 1st (M/T) ● Accelerator pedal: Fully released	Less than 4.75V
			[Ignition switch: ON] ● Engine stopped ● Shift lever: D (A/T), 1st (M/T) ● Accelerator pedal: Fully depressed	More than 0.36V
36	BR	Sensor ground (Throttle position sensor)	**[Engine is running]** ● **Warm-up condition** ● Idle speed	Approximately 0V
72	L	Sensor power supply (Throttle position sensor)	**[Ignition switch: ON]**	Approximately 5V

Diagnostic Procedure

BBS004NE

1. CHECK GROUND CONNECTIONS

1. Turn ignition switch OFF.
2. Loosen and retighten ground screws on the body.
   Refer to EC-1342, "Ground Inspection" .

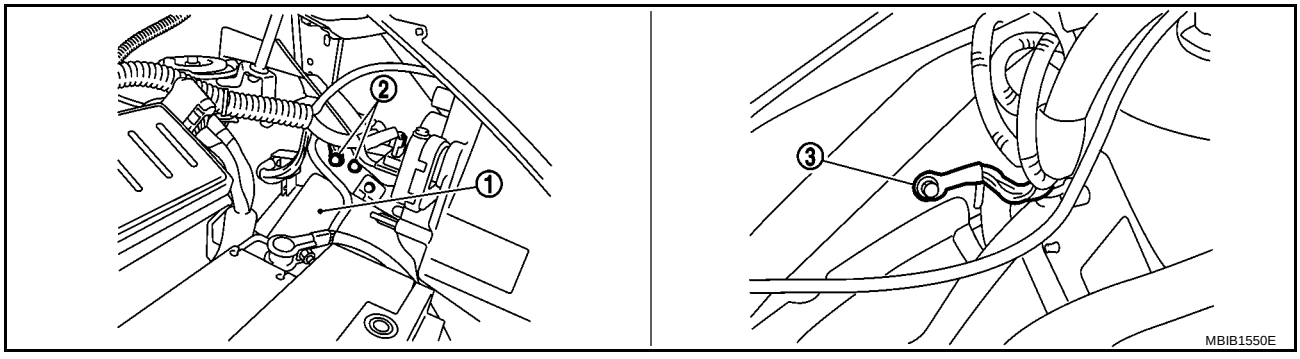

1. IPDM E/R
2. Body ground
3. Body ground

OK or NG

OK >> GO TO 2.
NG >> Repair or replace ground connections.

2. CHECK THROTTLE POSITION SENSOR 1 POWER SUPPLY CIRCUIT-I

1. Disconnect electric throttle control actuator (1) harness connector.

– ⇦: Vehicle front

2. Turn ignition switch ON.

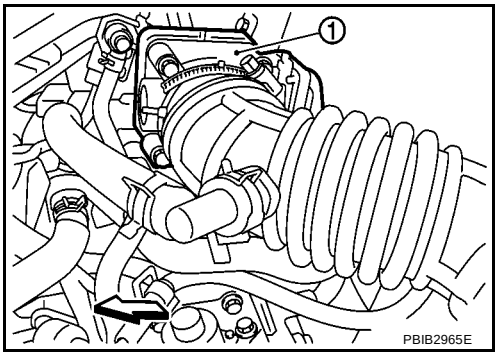

3. Check voltage between electric throttle control actuator terminal 1 and ground with CONSULT-II or tester.

Voltage: Approximately 5V

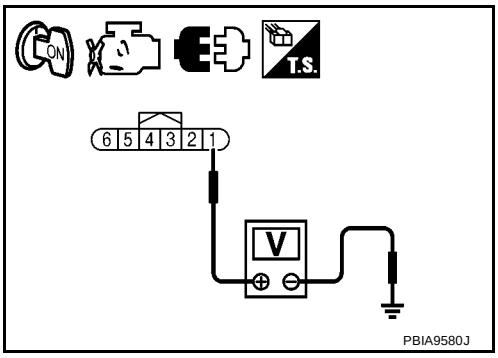

OK or NG

OK >> GO TO 3.
NG >> Repair open circuit or short to ground or short to power in harness or connectors.

3. CHECK THROTTLE POSITION SENSOR 1 GROUND CIRCUIT FOR OPEN AND SHORT

1. Turn ignition switch OFF.
2. Disconnect ECM harness connector.
3. Check harness continuity between electric throttle control actuator terminal 4 and ECM terminal 36. Refer to Wiring Diagram.

Continuity should exist.

4. Also check harness for short to ground and short to power.

OK or NG

OK >> GO TO 4.
NG >> Repair open circuit or short to ground or short to power in harness or connectors.

4. CHECK THROTTLE POSITION SENSOR 1 INPUT SIGNAL CIRCUIT FOR OPEN AND SHORT

1. Check harness continuity between ECM terminal 33 and electric throttle control actuator terminal 2. Refer to Wiring Diagram.

Continuity should exist.

2. Also check harness for short to ground and short to power.

OK or NG

OK >> GO TO 5.
NG >> Repair open circuit or short to ground or short to power in harness or connectors.

5. CHECK THROTTLE POSITION SENSOR

Refer to EC-1400, "Component Inspection" .

OK or NG

OK >> GO TO 7.
NG >> GO TO 6.

6. REPLACE ELECTRIC THROTTLE CONTROL ACTUATOR

1. Replace the electric throttle control actuator.
2. Perform EC-1279, "Throttle Valve Closed Position Learning" .
3. Perform EC-1279, "Idle Air Volume Learning" .

>> **INSPECTION END**

7. CHECK INTERMITTENT INCIDENT

Refer to EC-1336, "TROUBLE DIAGNOSIS FOR INTERMITTENT INCIDENT" .

>> **INSPECTION END**

Component Inspection

BBS004NF

THROTTLE POSITION SENSOR

1. Reconnect all harness connectors disconnected.
2. Perform EC-1279, "Throttle Valve Closed Position Learning" .
3. Turn ignition switch ON.
4. Set shift lever to D (A/T), 1st (M/T) position.
5. Check voltage between ECM terminals 33 (TP sensor 1 signal), 34 (TP sensor 2 signal) and ground under the following conditions.

Terminal	Accelerator pedal	Voltage
33 (Throttle position sensor 1)	Fully released	More than 0.36V
	Fully depressed	Less than 4.75V
34 (Throttle position sensor 2)	Fully released	Less than 4.75V
	Fully depressed	More than 0.36V

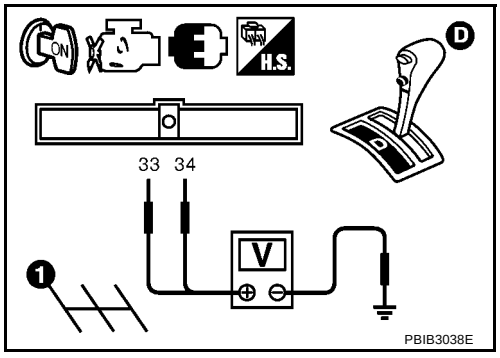

6. If NG, replace electric throttle control actuator and go to the next step.
7. Perform EC-1279, "Throttle Valve Closed Position Learning" .
8. Perform EC-1279, "Idle Air Volume Learning" .

Removal and Installation

BBS004NG

ELECTRIC THROTTLE CONTROL ACTUATOR

Refer to EM-120, "INTAKE MANIFOLD" .

DTC P0327, P0328 KS

PFP:22060

Component Description

BBS004NH

The knock sensor (1) is attached to the cylinder block. It senses engine knocking using a piezoelectric element. A knocking vibration from the cylinder block is sensed as vibrational pressure. This pressure is converted into a voltage signal and sent to the ECM.

- ⇦: Vehicle front

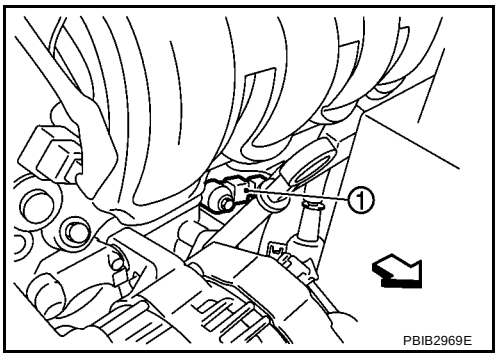

On Board Diagnosis Logic

BBS004NI

The MI will not light up for these self-diagnoses.

DTC No.	Trouble Diagnosis Name	DTC Detected Condition	Possible Cause
P0327 0327	Knock sensor circuit low input	An excessively low voltage from the sensor is sent to ECM.	● Harness or connectors (The sensor circuit is open or shorted.) ● Knock sensor
P0328 0328	Knock sensor circuit high input	An excessively high voltage from the sensor is sent to ECM.	

DTC Confirmation Procedure

BBS004NJ

NOTE:
If DTC Confirmation Procedure has been previously conducted, always turn ignition switch OFF and wait at least 10 seconds before conducting the next test.
TESTING CONDITION:
Before performing the following procedure, confirm that battery voltage is more than 10V at idle.

WITH CONSULT-II

1. Turn ignition switch ON and select “DATA MONITOR” mode with CONSULT-II.
2. Start engine and run it for at least 5 seconds at idle speed.
3. If 1st trip DTC is detected, go to EC-1403, "Diagnostic Procedure" .

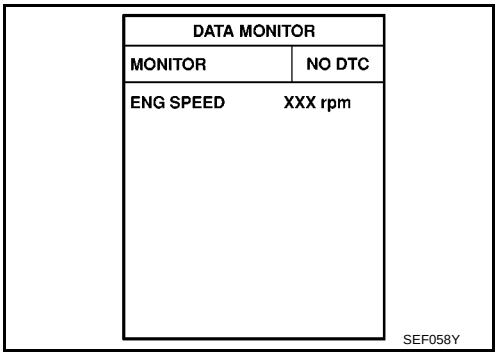

WITHOUT CONSULT-II

1. Start engine and run it for at least 5 seconds at idle speed.
2. Turn ignition switch OFF, wait at least 10 seconds and then turn ON.
3. Perform Diagnostic Test Mode II (Self-diagnostic results) with ECM.
4. If 1st trip DTC is detected, go to EC-1403, "Diagnostic Procedure" .

Wiring Diagram

BBS004NK

EC-KS-01

: DETECTABLE LINE FOR DTC
: NON-DETECTABLE LINE FOR DTC

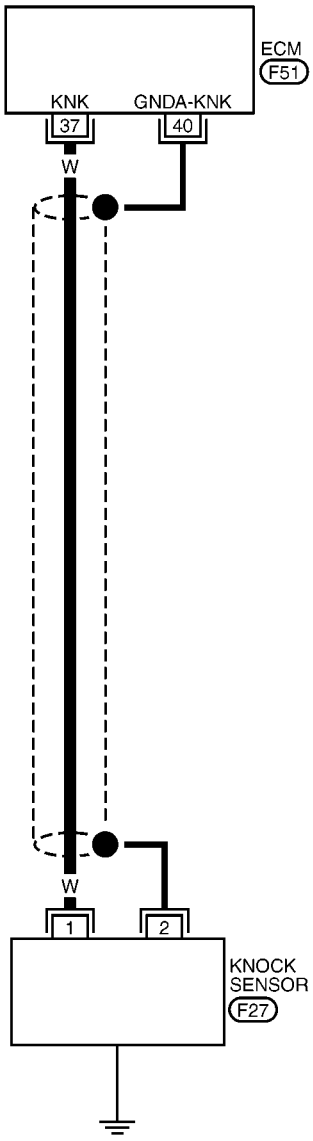

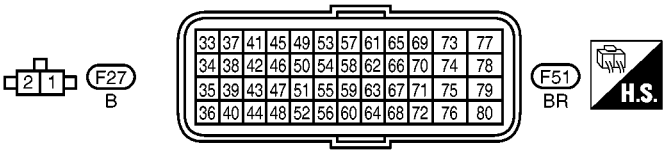

MBWA1467E

Specification data are reference values and are measured between each terminal and ground.

CAUTION:
Do not use ECM ground terminals when measuring input/output voltage. Doing so may result in damage to the ECM's transistor. Use a ground other than ECM terminals, such as the ground.

TERMINAL NO.	WIRE COLOR	ITEM	CONDITION	DATA (DC Voltage)
37	W	Knock sensor	**[Engine is running]** ● Idle speed	Approximately 2.5V
40	—	Sensor ground (Knock sensor)	**[Engine is running]** ● **Warm-up condition** ● Idle speed	Approximately 0V

Diagnostic Procedure

BBS004NL

1. CHECK KNOCK SENSOR INPUT SIGNAL CIRCUIT-I

1. Turn ignition switch OFF.
2. Disconnect ECM harness connector.
3. Check resistance between ECM terminal 37 and ground. Refer to Wiring Diagram.

   NOTE:
   It is necessary to use an ohmmeter which can measure more than 10 MΩ.

   Resistance: Approximately 530 - 590kΩ [at 20°C (68°F)]

4. Also check harness for short to ground and short to power.

OK or NG

OK >> GO TO 4.
NG >> GO TO 2.

2. CHECK KNOCK SENSOR INPUT SIGNAL CIRCUIT-II

1. Disconnect knock sensor (1) harness connector.

– ⇦: Vehicle front

2. Check harness continuity between ECM terminal 37 and knock sensor terminal 1.
   Refer to Wiring Diagram.

   Continuity should exist.

3. Also check harness for short to ground and short to power.

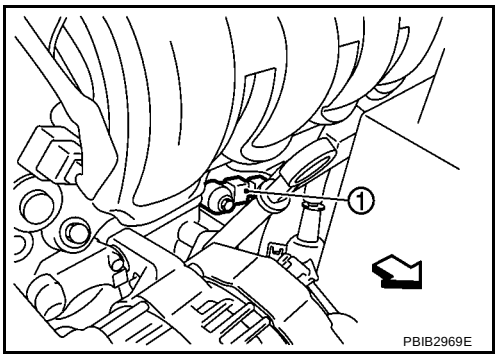

OK or NG

OK >> GO TO 3.
NG >> Repair open circuit or short to ground or short to power in harness or connectors.

3. CHECK KNOCK SENSOR

Refer to EC-1404, "Component Inspection" .

OK or NG

OK >> GO TO 6.
NG >> Replace knock sensor.

4. CHECK GROUND CONNECTIONS

Loosen and retighten ground screws on the body.
Refer to EC-1342, "Ground Inspection" .

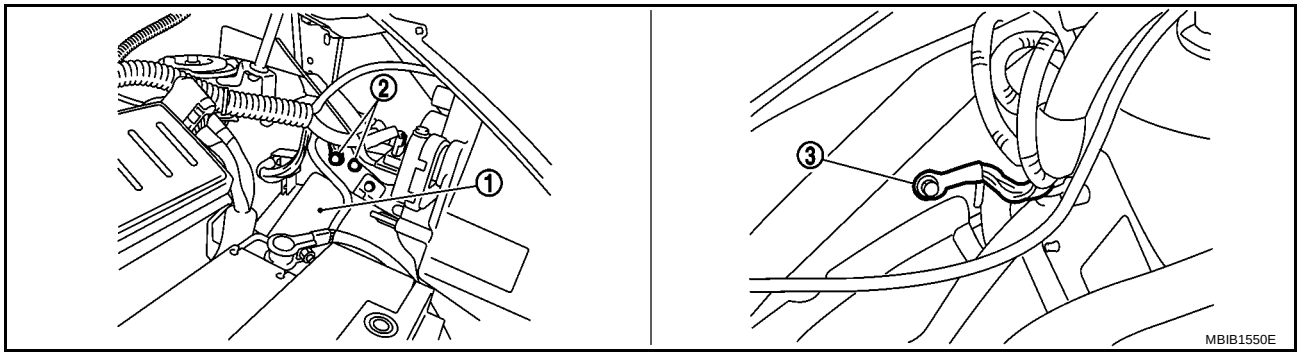

1. IPDM E/R
2. Body ground
3. Body ground

OK or NG

OK >> GO TO 5.
NG >> Repair or replace ground connections.

5. CHECK KNOCK SENSOR SHIELD CIRCUIT FOR OPEN AND SHORT

1. Reconnect knock sensor harness connector.
2. Check harness continuity between ECM terminal 40 and knock sensor terminal 2.

Continuity should exist

3. Also check harness for short to ground and short to power.

OK or NG

OK >> GO TO 6.
NG >> Repair open circuit or short to ground or short to power in harness or connectors.

6. CHECK INTERMITTENT INCIDENT

Refer to EC-1336, "TROUBLE DIAGNOSIS FOR INTERMITTENT INCIDENT" .

>> **INSPECTION END**

Component Inspection

BBS004NM

KNOCK SENSOR

Check resistance between knock sensor terminal 1 and ground.

NOTE:
It is necessary to use an ohmmeter which can measure more than 10 MΩ.

Resistance: Approximately 530 - 590kΩ [at 20°C (68°F)]

CAUTION:
Do not use any knock sensors that have been dropped or physically damaged. Use only new ones.

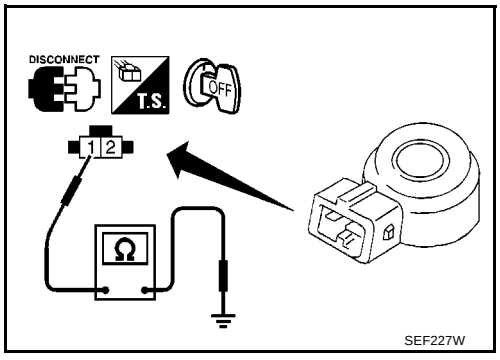

Removal and Installation

BBS004NN

KNOCK SENSOR

Refer to EM-189, "CYLINDER BLOCK" .

DTC P0335 CKP SENSOR (POS)

PFP:23731

Component Description

BBS004NO

The crankshaft position sensor (POS) is located on the cylinder block rear housing facing the gear teeth (cogs) of the signal plate at the end of the crankshaft. It detects the fluctuation of the engine revolution.
The sensor consists of a permanent magnet and Hall IC.
When the engine is running, the high and low parts of the teeth cause the gap with the sensor to change.
The changing gap causes the magnetic field near the sensor to change.
Due to the changing magnetic field, the voltage from the sensor changes.
The ECM receives the voltage signal and detects the fluctuation of the engine revolution.
ECM receives the signals as shown in the figure.

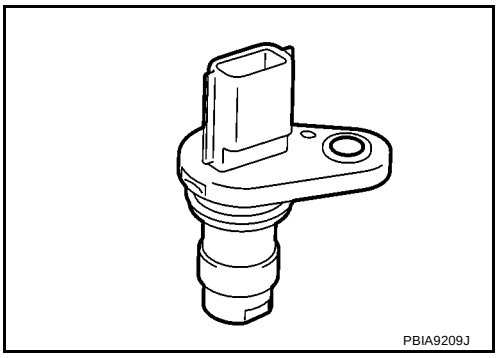

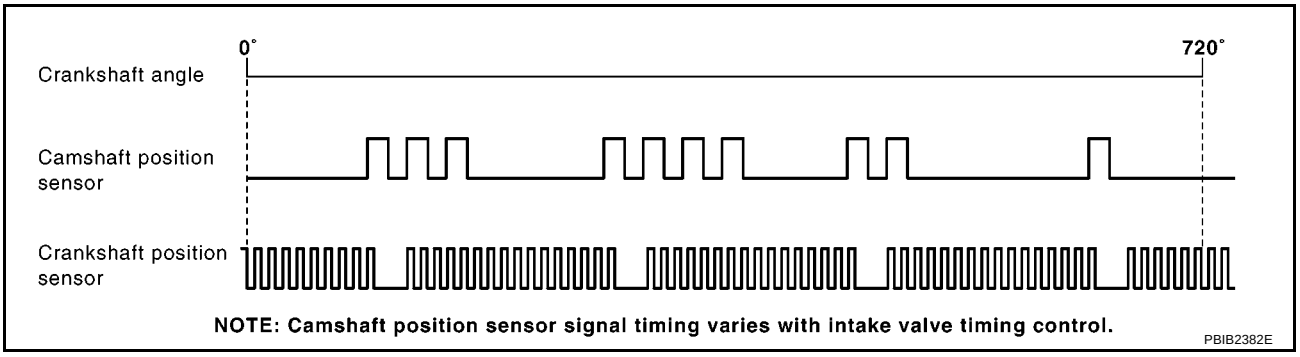

CONSULT-II Reference Value in Data Monitor Mode

BBS004NP

Specification data are reference values.

MONITOR ITEM	CONDITION	SPECIFICATION
ENG SPEED	● Run engine and compare CONSULT-II value with the tachometer indication.	Almost the same speed as the tachometer indication.

On Board Diagnosis Logic

BBS004NQ

DTC No.	Trouble diagnosis name	DTC detecting condition	Possible cause
P0335 0335	Crankshaft position sensor (POS) circuit	● The crankshaft position sensor (POS) signal is not detected by the ECM during the first few seconds of engine cranking. ● The proper pulse signal from the crankshaft position sensor (POS) is not sent to ECM while the engine is running. ● The crankshaft position sensor (POS) signal is not in the normal pattern during engine running.	● Harness or connectors [Crankshaft position sensor (POS) circuit is open or shorted.] (Accelerator pedal position sensor circuit is shorted.) (Refrigerant pressure sensor circuit is shorted.) ● Crankshaft position sensor (POS) ● Accelerator pedal position sensor ● Refrigerant position sensor ● Signal plate

DTC Confirmation Procedure

BBS004NR

NOTE:
If DTC Confirmation Procedure has been previously conducted, always turn ignition switch OFF and wait at least 10 seconds before conducting the next test.
TESTING CONDITION:
Before performing the following procedure, confirm that battery voltage is more than 10.5V with ignition switch ON.

WITH CONSULT-II

1. Turn ignition switch ON and select “DATA MONITOR” mode with CONSULT-II.
2. Crank engine for at least 2 seconds and run it for at least 5 seconds at idle speed.
3. If 1st trip DTC is detected, go to EC-1409, "Diagnostic Procedure" .

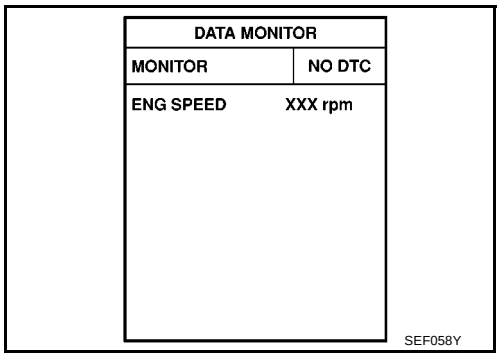

WITHOUT CONSULT-II

1. Crank engine for at least 2 seconds and run it for at least 5 seconds at idle speed.
2. Turn ignition switch OFF, wait at least 10 seconds and then turn ON.
3. Perform Diagnostic Test Mode II (Self-diagnostic results) with ECM.
4. If 1st trip DTC is detected, go to EC-1409, "Diagnostic Procedure" .

Wiring Diagram

BBS004NS

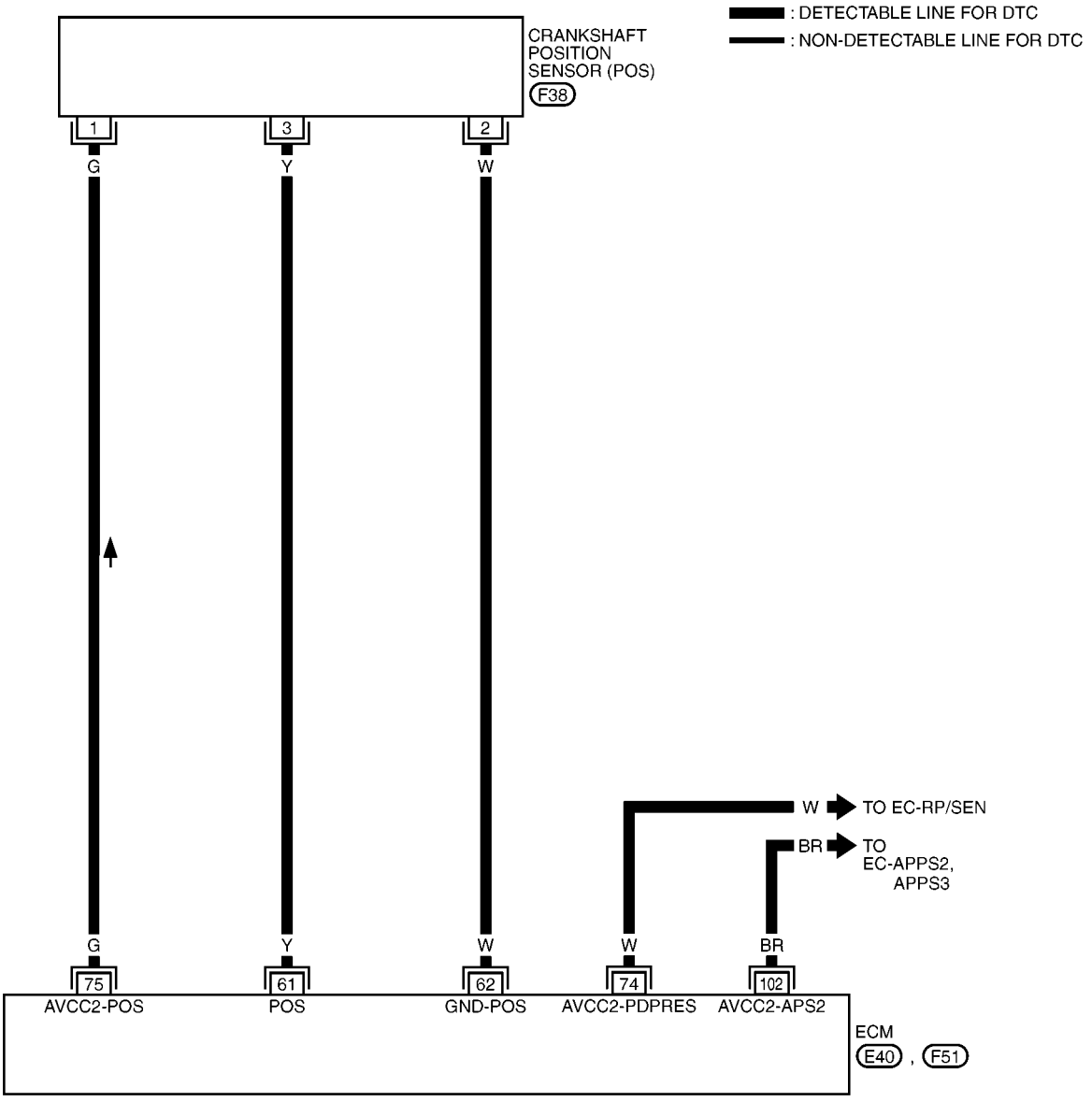

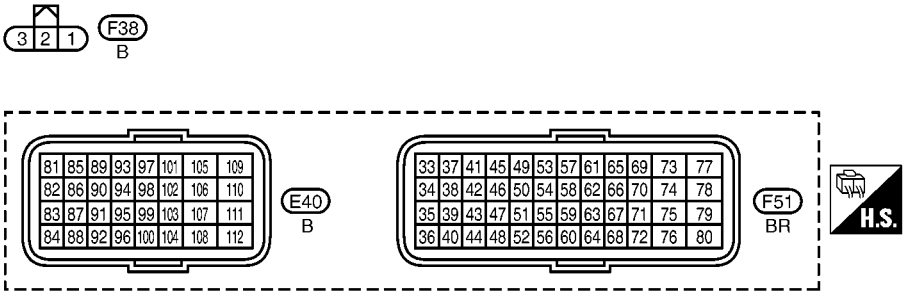

MBWA1468E

Specification data are reference values and are measured between each terminal and ground.
Pulse signal is measured by CONSULT-II.

CAUTION:

Do not use ECM ground terminals when measuring input/output voltage. Doing so may result in damage to the ECM's transistor. Use a ground other than ECM terminals, such as the ground.

TERMINAL NO.	WIRE COLOR	ITEM	CONDITION	DATA (DC Voltage)
61	Y	Crankshaft position sensor (POS)	**[Engine is running]** ● **Warm-up condition** ● Idle speed **NOTE:** The pulse cycle changes depending on rpm at idle	0 - 1.0V★ 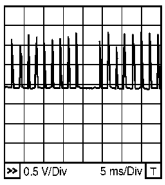 MBIB1453E
			[Engine is running] ● Engine speed: 2,000 rpm	0 - 1.0V★ 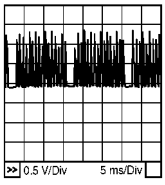 MBIB1454E
62	W	Sensor ground [Crankshaft position sensor (POS)]	**[Engine is running]** ● **Warm-up condition** ● Idle speed	Approximately 0V
74	W	Sensor power supply (Refrigerant pressure sensor)	**[Ignition switch: ON]**	Approximately 5V
75	G	Sensor power supply [Crankshaft position sensor (POS)]	**[Ignition switch: ON]**	Approximately 5V
102	BR	Sensor power supply (APP sensor 2)	**[Ignition switch: ON]**	Approximately 5V

★: Average voltage for pulse signal (Actual pulse signal can be confirmed by oscilloscope.)

Diagnostic Procedure

BBS004NT

1. CHECK GROUND CONNECTIONS

1. Turn ignition switch OFF.
2. Loosen and retighten ground screws on the body.
   Refer to EC-1342, "Ground Inspection" .

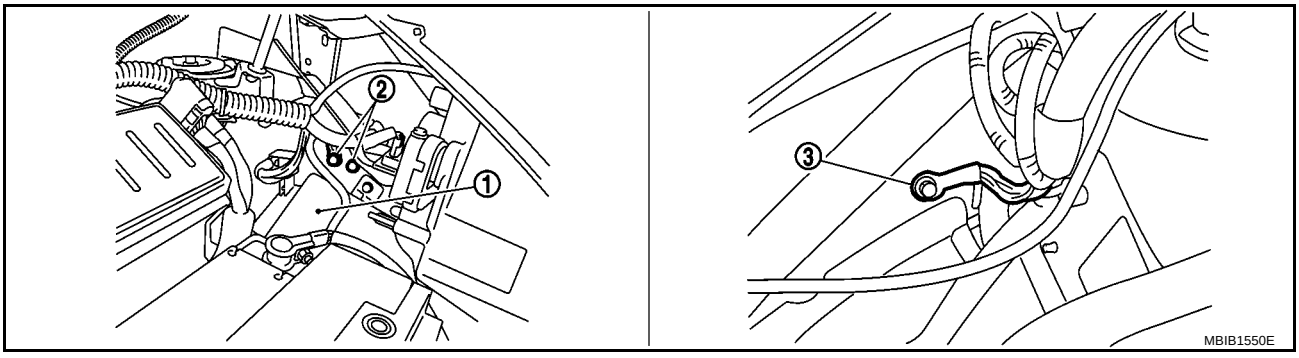

1. IPDM E/R
2. Body ground
3. Body ground

OK or NG

OK >> GO TO 2.
NG >> Repair or replace ground connections.

2. CHECK CRANKSHAFT POSITION (CKP) SENSOR (POS) POWER SUPPLY CIRCUIT-I

1. Disconnect crankshaft position (CKP) sensor (POS) (1) harness connector.
2. Turn ignition switch ON.

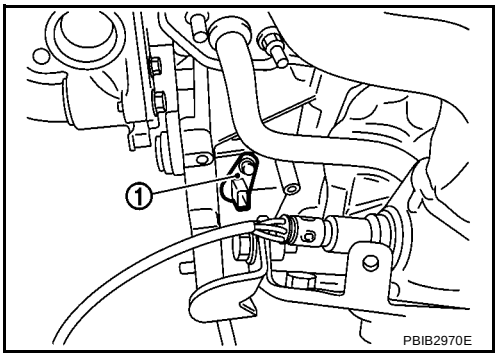

3. Check voltage between CKP sensor (POS) terminal 1 and ground with CONSULT-II or tester.

   Voltage: Approximately 5V

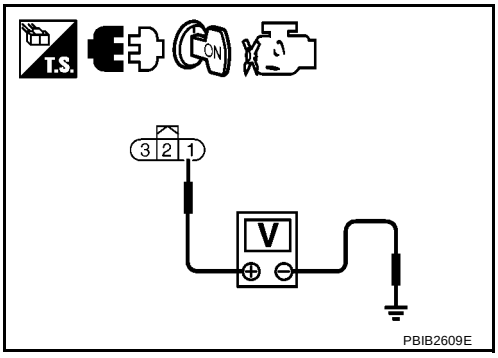

OK or NG

OK >> GO TO 6.
NG >> GO TO 3.

3. CHECK CKP SENSOR (POS) POWER SUPPLY CIRCUIT-II

1. Turn ignition switch OFF.
2. Disconnect ECM harness connector.
3. Check harness continuity between CKP sensor (POS) terminal 1 and ECM terminal 75.
   Refer to Wiring Diagram.

Continuity should exist.

OK or NG

OK >> GO TO 4.
NG >> Repair open circuit

4. CHECK CKP SENSOR (POS) POWER SUPPLY CIRCUIT-III

Check harness for short to power and short to ground, between the following terminals.

ECM terminal	Sensor terminal	Reference Wiring Diagram
74	Refrigerant pressure sensor terminal 3	EC-1591, "Wiring Diagram"
75	Crankshaft position sensor (POS) terminal 1	EC-1407, "Wiring Diagram"
102	APP sensor terminal 5	EC-1503, "Wiring Diagram"

OK or NG

OK >> GO TO 5.
NG >> Repair short to ground or short to power in harness or connectors.

5. CHECK COMPONENTS

Check the following.

- Accelerator pedal position sensor (Refer to EC-1509, "Component Inspection" .)
- Refrigerant pressure sensor (Refer to ATC-85, "Refrigerant Pressure Sensor" .)

OK or NG

OK >> GO TO 10.
NG >> Replace malfunctioning component.

6. CHECK CKP SENSOR (POS) GROUND CIRCUIT FOR OPEN AND SHORT

1. Turn ignition switch OFF.
2. Disconnect ECM harness connector.
3. Check harness continuity between CKP sensor (POS) terminal 2 and ECM terminal 62.
   Refer to Wiring Diagram.

Continuity should exist.

4. Also check harness for short to ground and short to power.

OK or NG

OK >> GO TO 7.
NG >> Repair open circuit or short to ground or short to power in harness or connectors.

7. CHECK CKP SENSOR (POS) INPUT SIGNAL CIRCUIT FOR OPEN AND SHORT

1. Check harness continuity between CKP sensor (POS) terminal 3 and ECM terminal 61.
   Refer to Wiring Diagram.

Continuity should exist.

2. Also check harness for short to ground and short to power.

OK or NG

OK >> GO TO 8.
NG >> Repair open circuit or short to ground or short to power in harness or connectors.

8. CHECK CRANKSHAFT POSITION SENSOR (POS)

Refer to EC-1412, "Component Inspection" .

OK or NG

OK >> GO TO 9.
NG >> Replace crankshaft position sensor (POS).

9. CHECK GEAR TOOTH

Visually check for chipping signal plate gear tooth.

OK or NG

OK >> GO TO 10.
NG >> Replace the signal plate.

10. CHECK INTERMITTENT INCIDENT

Refer to EC-1336, "TROUBLE DIAGNOSIS FOR INTERMITTENT INCIDENT" .

>> **INSPECTION END**

Component Inspection

BBS004NU

CRANKSHAFT POSITION SENSOR (POS)

1. Loosen the fixing bolt of the sensor.
2. Disconnect crankshaft position sensor (POS) harness connector.
3. Remove the sensor.
4. Visually check the sensor for chipping.

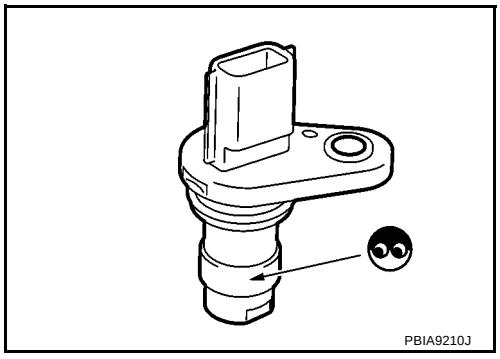

5. Check resistance as shown in the figure.

Terminal No. (Polarity)	Resistance Ω [at 25°C (77°F)]
1 (+) - 2 (-)	Except 0 or ∞
1 (+) - 3 (-)	
2 (+) - 3 (-)	

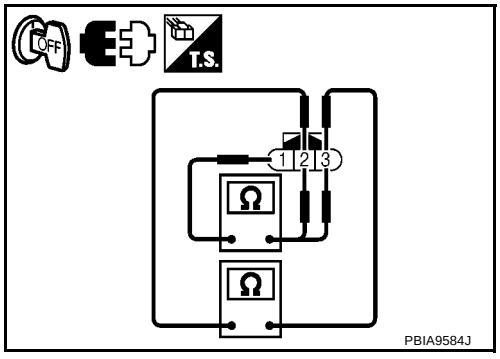

6. If NG, replace crankshaft position sensor (POS).

Removal and Installation

BBS004NV

CRANKSHAFT POSITION SENSOR (POS)

Refer to EM-189, "CYLINDER BLOCK" .

DTC P0340 CMP SENSOR (PHASE)

PFP:23731

Component Description

BBS004NW

The camshaft position sensor (PHASE) senses the protrusion of camshaft (INT) to identify a particular cylinder. The camshaft position sensor (PHASE) senses the piston position.
When the crankshaft position sensor (POS) system becomes inoperative, the camshaft position sensor (PHASE) provides various controls of engine parts instead, utilizing timing of cylinder identification signals.
The sensor consists of a permanent magnet and Hall IC.
When engine is running, the high and low parts of the teeth cause the gap with the sensor to change.
The changing gap causes the magnetic field near the sensor to change.
Due to the changing magnetic field, the voltage from the sensor changes.
ECM receives the signals as shown in the figure.

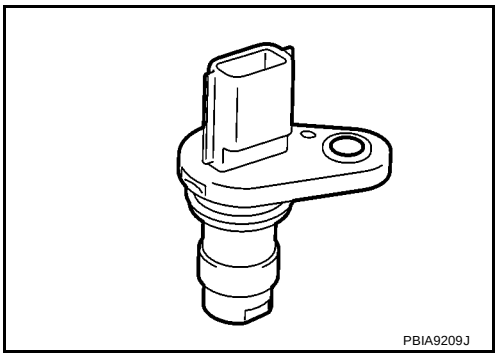

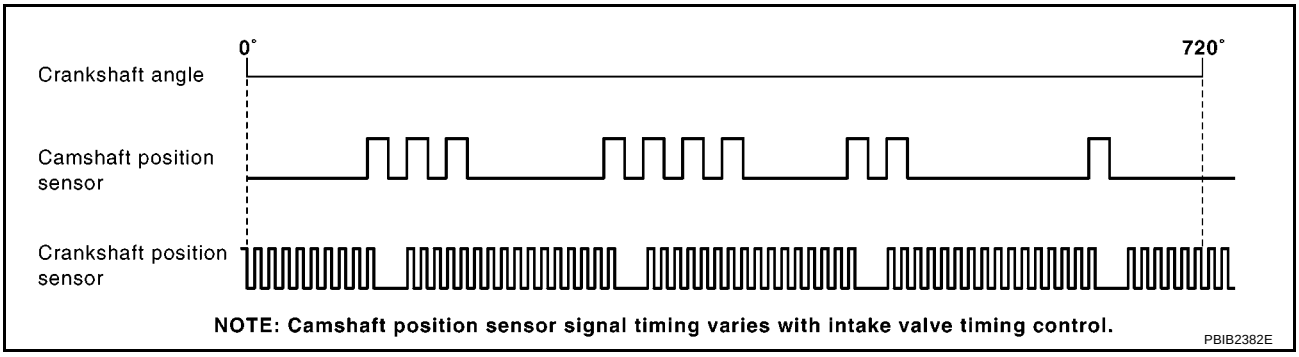

On Board Diagnosis Logic

BBS004NX

NOTE:
If DTC P0340 is displayed with DTC P1229, first perform the trouble diagnosis for DTC P1229. Refer to **EC-1471, "DTC P1229 SENSOR POWER SUPPLY"** **.**

DTC No.	Trouble diagnosis name	DTC detecting condition	Possible cause
P0340 0340	Camshaft position sensor (PHASE) circuit	● The cylinder No. signal is not sent to ECM for the first few seconds during engine cranking. ● The cylinder No. signal is not set to ECM during engine running. ● The cylinder No. signal is not in the normal pattern during engine running.	● Harness or connectors (The sensor circuit is open or shorted.) ● Camshaft position sensor (PHASE) ● Camshaft (Intake) ● Starter motor (Refer to SC-45, "STARTING SYSTEM" .) ● Starting system circuit (Refer to SC-45, "STARTING SYSTEM" .) ● Dead (Weak) battery

DTC Confirmation Procedure

BBS004NY

NOTE:
If DTC Confirmation Procedure has been previously conducted, always turn ignition switch OFF and wait at least 10 seconds before conducting the next test.
TESTING CONDITION:
Before performing the following procedure, confirm that battery voltage is more than 10.5V with ignition switch ON.

WITH CONSULT-II

1. Turn ignition switch ON.
2. Select “DATA MONITOR” mode with CONSULT-II.
3. Crank engine for at least 2 seconds and run it for at least 5 seconds at idle speed.
4. If 1st trip DTC is detected, go to EC-1416, "Diagnostic Procedure" .
   If 1st trip DTC is not detected, go to next step.
5. Maintain engine speed at more than 800 rpm for at least 5 seconds.
6. If 1st trip DTC is detected, go to EC-1416, "Diagnostic Procedure" .

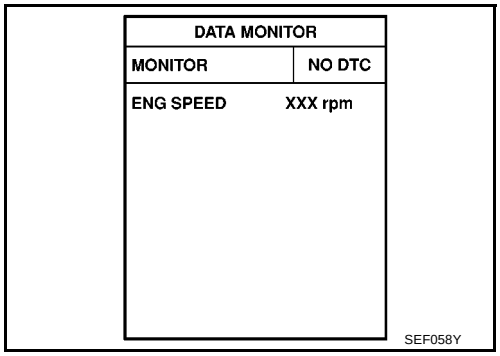

WITHOUT CONSULT-II

1. Crank engine for at least 2 seconds and run it for at least 5 seconds at idle speed.
2. Turn ignition switch OFF, wait at least 10 seconds and then turn ON.
3. Perform Diagnostic Test Mode II (Self-diagnostic results) with ECM.
4. If 1st trip DTC is detected, go to EC-1416, "Diagnostic Procedure" .
   If 1st trip DTC is not detected, go to next step.
5. Start engine and maintaining engine speed at more than 800 rpm for at least 5 seconds.
6. Turn ignition switch OFF, wait at least 10 seconds and then turn ON.
7. Perform Diagnostic Test Mode II (Self-diagnostic results) with ECM.
8. If 1st trip DTC is detected, go to EC-1416, "Diagnostic Procedure" .

Wiring Diagram

BBS004NZ

EC-PHASE-01

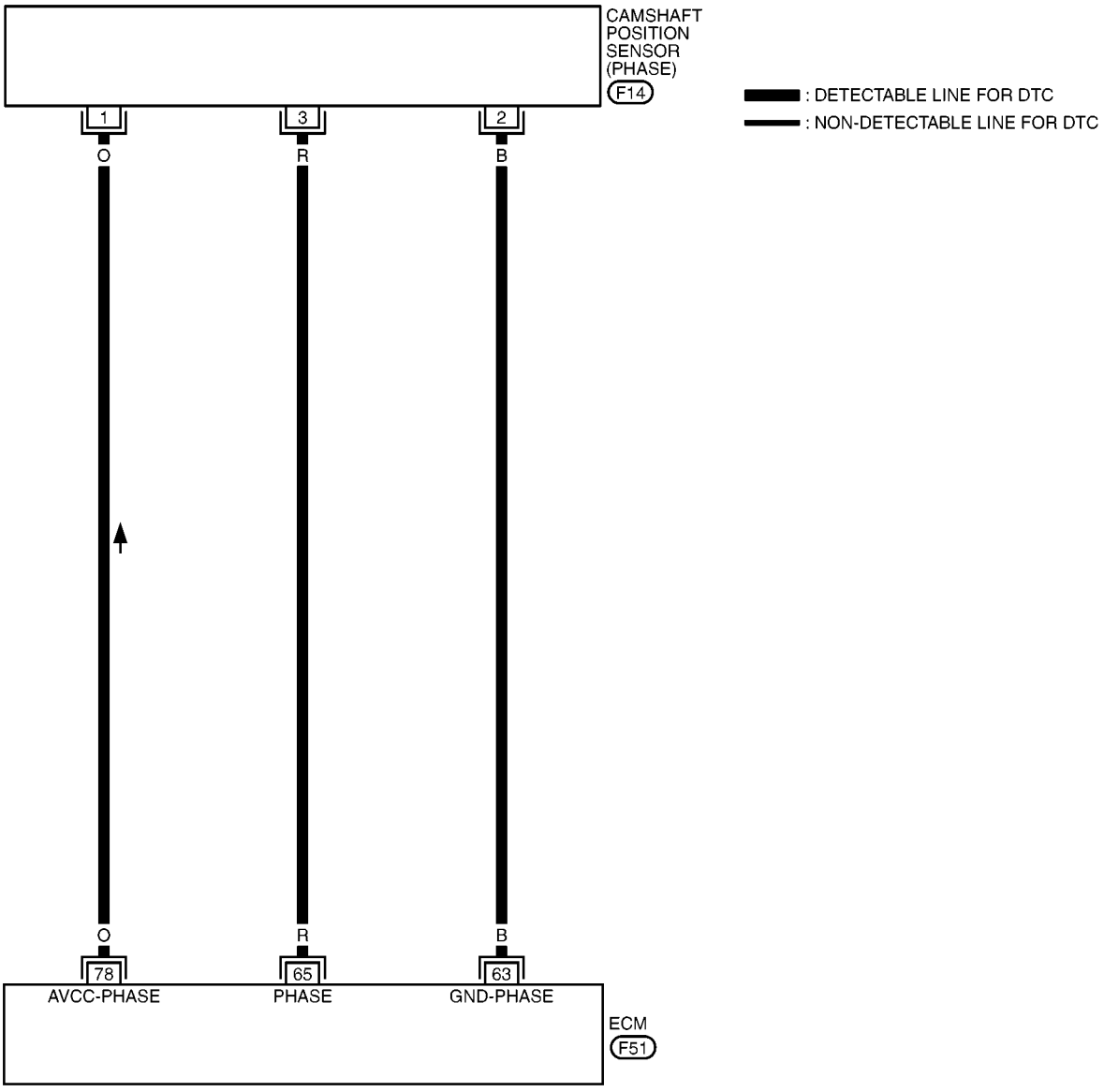

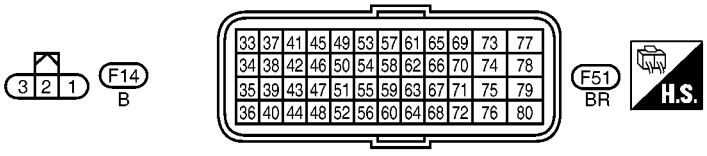

MBWA1469E

Specification data are reference values and are measured between each terminal and ground.
Pulse signal is measured by CONSULT-II.

CAUTION:

Do not use ECM ground terminals when measuring input/output voltage. Doing so may result in damage to the ECM's transistor. Use a ground other than ECM terminals, such as the ground.

TERMINAL NO.	WIRE COLOR	ITEM	CONDITION	DATA (DC Voltage)
63	B	Sensor ground [Camshaft position sensor (PHASE)]	**[Engine is running]** ● **Warm-up condition** ● Idle speed	Approximately 0V
65	R	Camshaft position sensor (PHASE)	**[Engine is running]** ● **Warm-up condition** ● Idle speed **NOTE:** The pulse cycle changes depending on rpm at idle	0 - 1.0V★ 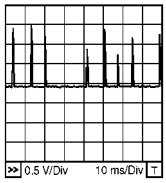 MBIB1455E
			[Engine is running] ● Engine speed: 2,000 rpm	0 - 1.0V★ 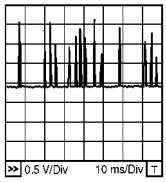 MBIB1456E
78	O	Sensor power supply [Camshaft position sensor (PHASE)]	**[Ignition switch: ON]**	Approximately 5V

★: Average voltage for pulse signal (Actual pulse signal can be confirmed by oscilloscope.)

Diagnostic Procedure

BBS004O0

1. CHECK STARTING SYSTEM

Turn ignition switch to START position.

Does the engine turn over?

Does the starter motor operate?

Yes or No

Yes >> GO TO 2.
No >> Check starting system. (Refer to SC-45, "STARTING SYSTEM" .)

2. CHECK GROUND CONNECTIONS

1. Turn ignition switch OFF.
2. Loosen and retighten ground screws on the body.
   Refer to EC-1342, "Ground Inspection" .

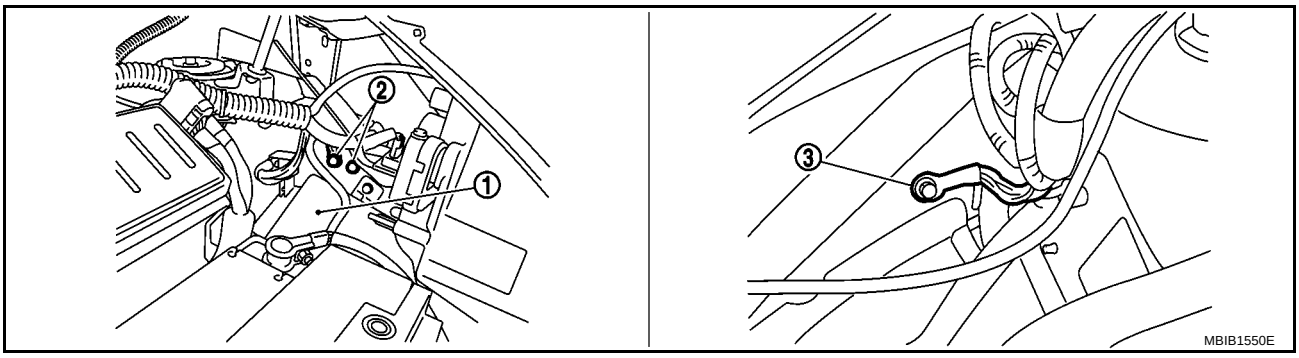

1. IPDM E/R
2. Body ground
3. Body ground

OK or NG

OK >> GO TO 3.
NG >> Repair or replace ground connections.

3. CHECK CAMSHAFT POSITION (CMP) SENSOR (PHASE) POWER SUPPLY CIRCUIT

1. Disconnect camshaft position (CMP) sensor (PHASE) (1) harness connector.

– ⇦: Vehicle front

2. Turn ignition switch ON.

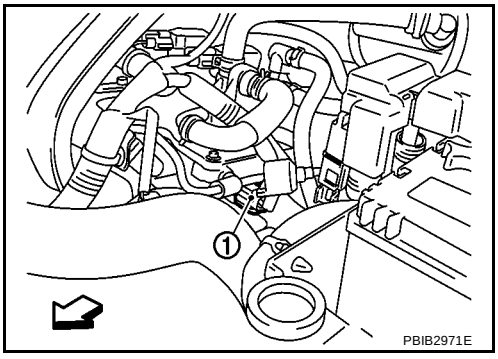

3. Check voltage between CMP sensor (PHASE) terminal 1 and ground with CONSULT-II or tester.

Voltage: Battery voltage

OK or NG

OK >> GO TO 4.
NG >> Repair open circuit or short to ground or short to power in harness or connectors.

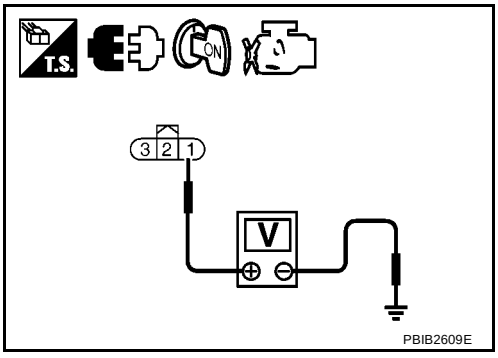

4. CHECK CMP SENSOR (PHASE) GROUND CIRCUIT FOR OPEN AND SHORT

1. Turn ignition switch OFF.
2. Disconnect ECM harness connector.
3. Check harness continuity between CMP sensor (PHASE) terminal 2 and ECM terminal 63.
   Refer to Wiring Diagram.

   Continuity should exist.

4. Also check harness for short to ground and short to power.

OK or NG

OK >> GO TO 5.
NG >> Repair open circuit or short to ground or short to power in harness or connectors.

5. CHECK CMP SENSOR (PHASE) INPUT SIGNAL CIRCUIT FOR OPEN AND SHORT

1. Check harness continuity between CMP sensor (PHASE) terminal 3 and ECM terminal 65.
   Refer to Wiring Diagram.

   Continuity should exist.

2. Also check harness for short to ground and short to power.

OK or NG

OK >> GO TO 6.
NG >> Repair open circuit or short to ground or short to power in harness or connectors.

6. CHECK CAMSHAFT POSITION SENSOR (PHASE)

Refer to EC-1418, "Component Inspection" .

OK or NG

OK >> GO TO 7.
NG >> Replace camshaft position sensor (PHASE).

7. CHECK CAMSHAFT (INTAKE)

Check the following.

- Accumulation of debris to the signal plate of camshaft (1) rear end
- Chipping signal plate of camshaft rear end

OK or NG

OK >> GO TO 8.
NG >> Remove debris and clean the signal plate of camshaft rear end or replace camshaft.

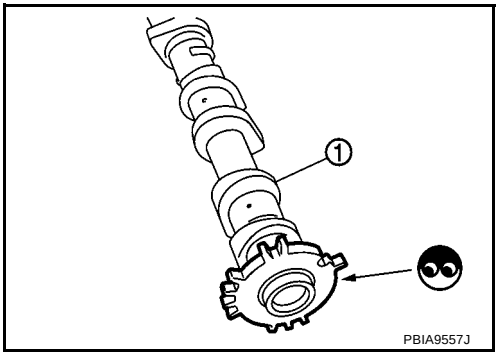

8. CHECK INTERMITTENT INCIDENT

Refer to EC-1336, "TROUBLE DIAGNOSIS FOR INTERMITTENT INCIDENT" .

>> **INSPECTION END**

Component Inspection

BBS004O1

CAMSHAFT POSITION SENSOR (PHASE)

1. Loosen the fixing bolt of the sensor.
2. Disconnect camshaft position sensor (PHASE) harness connector.
3. Remove the sensor.

4. Visually check the sensor for chipping.

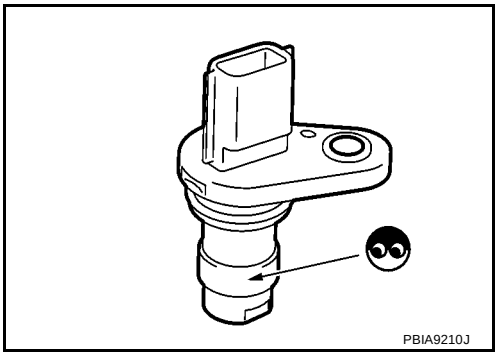

5. Check resistance as shown in the figure.

Terminal No. (Polarity)	Resistance Ω [at 25°C (77°F)]
1 (+) - 2 (-)	Except 0 or ∞
1 (+) - 3 (-)	
2 (+) - 3 (-)	

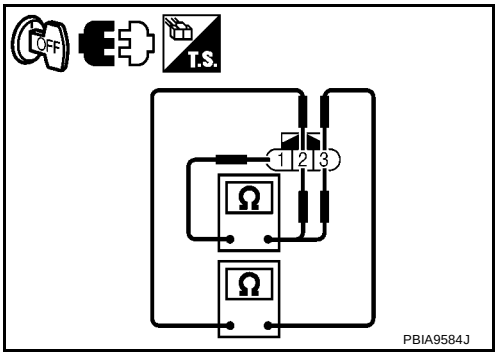

BBS004O2

Removal and Installation

CAMSHAFT POSITION SENSOR (PHASE)

Refer to EM-151, "CAMSHAFT" .

DTC P0605 ECM

PFP:23710

Component Description

BBS004O3

The ECM consists of a microcomputer and connectors for signal input and output and for power supply. The ECM controls the engine.

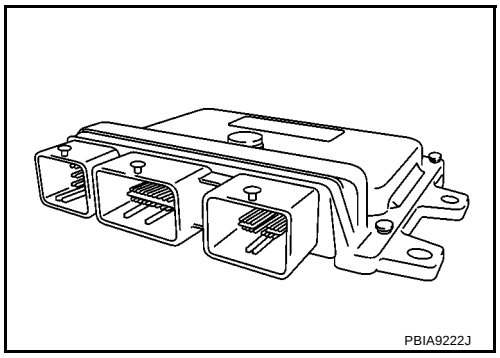

On Board Diagnosis Logic

BBS004O4

This self-diagnosis has one or two trip detection logic.

DTC No.	Trouble diagnosis name	DTC detecting condition		Possible cause
P0605 0605	Engine control module	A)	ECM calculation function is malfunctioning.	● ECM
		B)	ECM EEP-ROM system is malfunctioning.	
		C)	ECM self shut-off function is malfunctioning.	

FAIL-SAFE MODE

ECM enters fail-safe mode when malfunction A is detected.

Detected items	Engine operation condition in fail-safe mode
Malfunction A	ECM stops the electric throttle control actuator control, throttle valve is maintained at a fixed opening (approx. 5 degrees) by the return spring.

DTC Confirmation Procedure

BBS004O5

Perform PROCEDURE FOR MALFUNCTION A first. If the 1st trip DTC cannot be confirmed, perform PROCEDURE FOR MALFUNCTION B. If there is no malfunction on PROCEDURE FOR MALFUNCTION B, perform PROCEDURE FOR MALFUNCTION C.

NOTE:
If DTC Confirmation Procedure has been previously conducted, always turn ignition switch OFF and wait at least 10 seconds before conducting the next test.

PROCEDURE FOR MALFUNCTION A

With CONSULT-II

1. Turn ignition switch ON.
2. Select “DATA MONITOR” mode with CONSULT-II.
3. If 1st trip DTC is detected, go to EC-1422, "Diagnostic Procedure" .

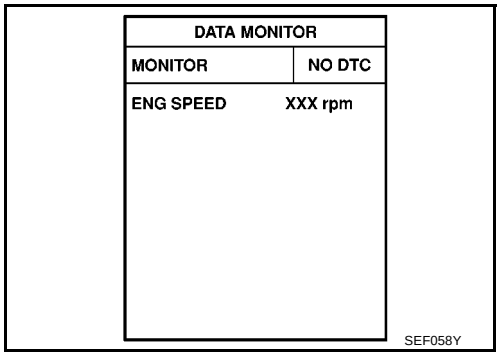

Without CONSULT-II

1. Turn ignition switch ON.
2. Turn ignition switch OFF, wait at least 10 seconds and then turn ON.
3. Perform Diagnostic Test Mode II (Self-diagnostic results) with ECM.

4. If 1st trip DTC is detected, go to EC-1422, "Diagnostic Procedure" .

PROCEDURE FOR MALFUNCTION B

With CONSULT-II

1. Turn ignition switch ON and wait at least 1 second.
2. Select “DATA MONITOR” mode with CONSULT-II.
3. Turn ignition switch OFF, wait at least 10 seconds and then turn ON.
4. If 1st trip DTC is detected, go to EC-1422, "Diagnostic Procedure" .

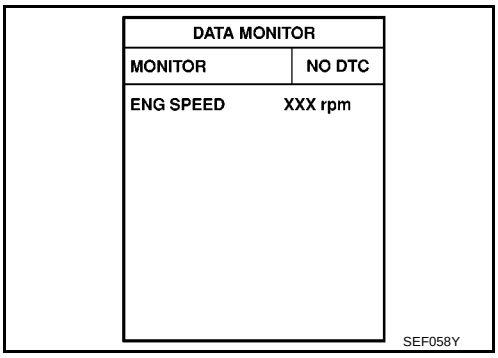

Without CONSULT-II

1. Turn ignition switch ON and wait at least 1 second.
2. Turn ignition switch OFF, wait at least 10 seconds and then turn ON.
3. Perform Diagnostic Test Mode II (Self-diagnostic results) with ECM.
4. If 1st trip DTC is detected, go to EC-1422, "Diagnostic Procedure"

PROCEDURE FOR MALFUNCTION C

With CONSULT-II

1. Turn ignition switch ON and wait at least 1 second.
2. Select “DATA MONITOR” mode with CONSULT-II.
3. Turn ignition switch OFF, wait at least 10 seconds and then turn ON.
4. Repeat step 3 for 32 times.
5. If 1st trip DTC is detected, go to EC-1422, "Diagnostic Procedure" .

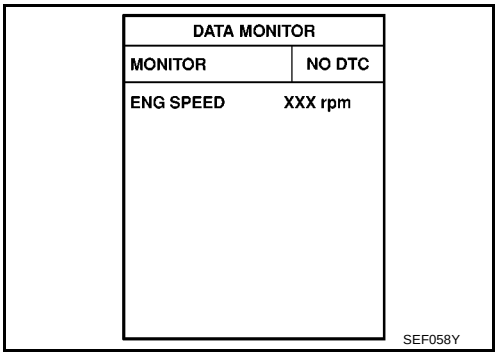

Without CONSULT-II

1. Turn ignition switch ON and wait at least 1 second.
2. Turn ignition switch OFF and wait at least 10 seconds.
3. Repeat step 1 to 2 for 32 times.
4. Turn ignition switch OFF, wait at least 10 seconds and then turn ON.
5. Perform Diagnostic Test Mode II (Self-diagnostic results) with ECM.
6. If 1st trip DTC is detected, go to EC-1422, "Diagnostic Procedure" .

Diagnostic Procedure

BBS004O6

1. INSPECTION START

With CONSULT-II

1. Turn ignition switch ON.
2. Select “SELF DIAG RESULTS” mode with CONSULT-II.
3. Touch “ERASE”.
4. **Perform DTC Confirmation Procedure.**
   See EC-1420, "DTC Confirmation Procedure" .
5. Is the 1st trip DTC P0605 displayed again?

Without CONSULT-II

1. Turn ignition switch ON.
2. Erase the Diagnostic Test Mode II (Self-diagnostic results) memory.
   Refer to EC-1269, "How to Erase Diagnostic Test Mode II (Self-diagnostic Results)" .
3. **Perform DTC Confirmation Procedure.**
   See EC-1420, "DTC Confirmation Procedure" .
4. Is the 1st trip DTC 0605 displayed again?

Yes or No

Yes >> GO TO 2.
No >> **INSPECTION END**

2. REPLACE ECM

1. Replace ECM.
2. Perform initialization of NATS system and registration of all NATS ignition key IDs. Refer to BL-218, "ECM Re-communicating Function" .
3. Perform EC-1278, "Accelerator Pedal Released Position Learning" .
4. Perform EC-1279, "Throttle Valve Closed Position Learning" .
5. Perform EC-1279, "Idle Air Volume Learning" .

>> **INSPECTION END**

DTC P1065 ECM

PFP:23710

Component Description

BBS004O7

ECM has the memory function of the DTC memory, the air-fuel ratio feedback compensation value memory, the Idle Air Volume Learning value memory, etc. even when the ignition switch is turned OFF.

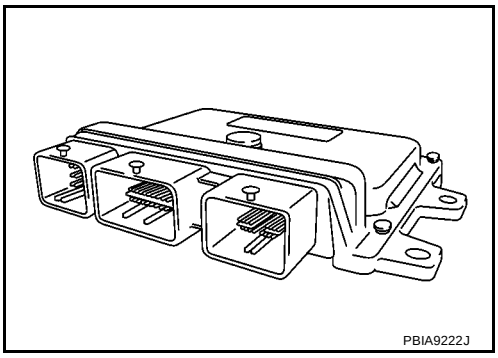

On Board Diagnosis Logic

BBS004O8

DTC No.	Trouble diagnosis name	DTC detecting condition	Possible cause
P1065* 1065	Engine control module	ECM back-up RAM system does not function properly.	● ECM

*: This self-diagnosis is not for ECM power supply circuit, even though “ECM BACK UP/CIRCUIT” is displayed on CONSULT-II screen.

DTC Confirmation Procedure

BBS004O9

NOTE:
If DTC Confirmation Procedure has been previously conducted, always turn ignition switch OFF and wait at least 10 seconds before conducting the next test.

WITH CONSULT-II

1. Turn ignition switch ON and wait at least 1 second.
2. Select “DATA MONITOR” mode with CONSULT-II.
3. Start engine and let it idle for 1 second.
4. Turn ignition switch OFF, wait at least 10 seconds and then turn ON.
5. Repeat steps 3 and 4 for 4 times.
6. If 1st trip DTC is detected, go to EC-1424, "Diagnostic Procedure" .

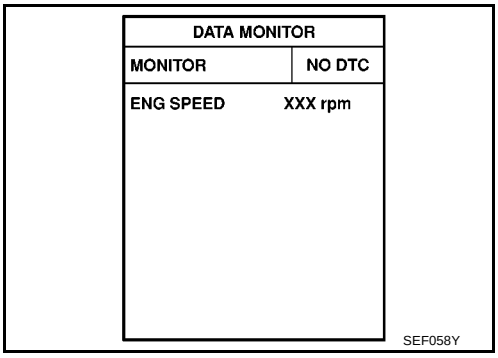

WITHOUT CONSULT-II

1. Start engine and let it idle for 1 second.
2. Turn ignition switch OFF, wait at least 10 seconds and then turn ON.
3. Repeat steps 1 to 2 for 4 times.
4. Turn ignition switch OFF, wait at least 10 seconds and then turn ON.
5. Perform Diagnostic Test Mode II (Self-diagnostic results) with ECM.
6. If 1st trip DTC is detected, go to EC-1424, "Diagnostic Procedure" .

Diagnostic Procedure

BBS004OA

1. INSPECTION START

With CONSULT-II

1. Turn ignition switch ON.
2. Select “SELF-DIAG RESULTS” mode with CONSULT-II.
3. Touch “ERASE”.
4. **Perform DTC Confirmation Procedure.**
   See EC-1423, "DTC Confirmation Procedure" .
5. Is the 1st trip DTC P1065 displayed again?

Without CONSULT-II

1. Turn ignition switch ON.
2. Erase the Diagnostic Test Mode II (Self-diagnostic results) memory.
   Refer to EC-1269, "How to Erase Diagnostic Test Mode II (Self-diagnostic Results)"
3. **Perform DTC Confirmation Procedure.**
   See EC-1423, "DTC Confirmation Procedure" .
4. Is the 1st trip DTC 1065 displayed again?

Yes or No

Yes >> GO TO 2.
No >> **INSPECTION END**

2. REPLACE ECM

1. Replace ECM.
2. Perform initialization of NATS system and registration of all NATS ignition key IDs. Refer to BL-218, "ECM Re-communicating Function" .
3. Perform EC-1278, "Accelerator Pedal Released Position Learning" .
4. Perform EC-1279, "Throttle Valve Closed Position Learning" .
5. Perform EC-1279, "Idle Air Volume Learning" .

>> **INSPECTION END**

DTC P1111 IVT CONTROL SOLENOID VALVE

PFP:23796

Component Description

BBS004OB

Intake valve timing control solenoid valve is activated by ON/OFF pulse duty (ratio) signals from the ECM.
The intake valve timing control solenoid valve changes the oil amount and direction of flow through intake valve timing control unit or stops oil flow.
The longer pulse width advances valve angle.
The shorter pulse width retards valve angle.
When ON and OFF pulse widths become equal, the solenoid valve stops oil pressure flow to fix the intake valve angle at the control position.

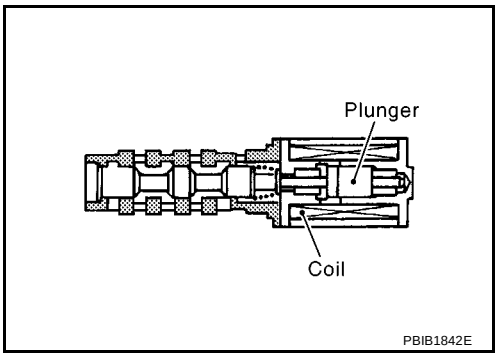

CONSULT-II Reference Value in Data Monitor Mode

BBS004OC

Specification data are reference values.

MONITOR ITEM	CONDITION		SPECIFICATION
INT/V SOL (B1)	● Engine: After warming up ● Air conditioner switch: OFF ● Shift lever: P or N (A/T), Neutral (M/T) ● No load	Idle	0% - 2%
		2,500 rpm	Approx. 0% - 90%

On Board Diagnosis Logic

BBS004OD

DTC No.	Trouble diagnosis name	DTC detecting condition	Possible cause
P1111 1111	Intake valve timing control solenoid valve circuit	An improper voltage is sent to the ECM through intake valve timing control solenoid valve.	● Harness or connectors (Solenoid valve circuit is open or shorted.) ● Intake valve timing control solenoid valve

DTC Confirmation Procedure

BBS004OE

NOTE:
If DTC Confirmation Procedure has been previously conducted, always turn ignition switch OFF and wait at least 10 seconds before conducting the next test.

WITH CONSULT-II

1. Turn ignition switch ON.
2. Select “DATA MONITOR” mode with CONSULT-II.
3. Start engine and let it idle for 5 seconds.
4. If 1st trip DTC is detected, go to EC-1428, "Diagnostic Procedure" .

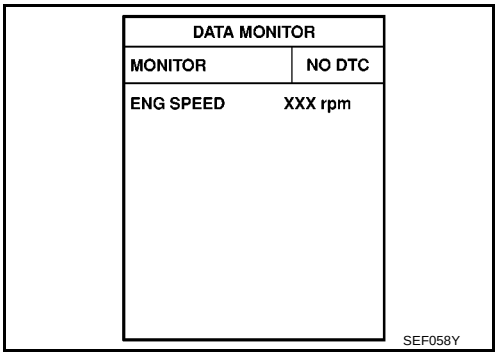

WITHOUT CONSULT-II

1. Start engine and wait at least 5 seconds.
2. Turn ignition switch OFF, wait at least 10 seconds and then turn ON.
3. Perform Diagnostic Test Mode II (Self-diagnostic results) with ECM.
4. If 1st trip DTC is detected, go to EC-1428, "Diagnostic Procedure" .

Wiring Diagram

BBS004OF

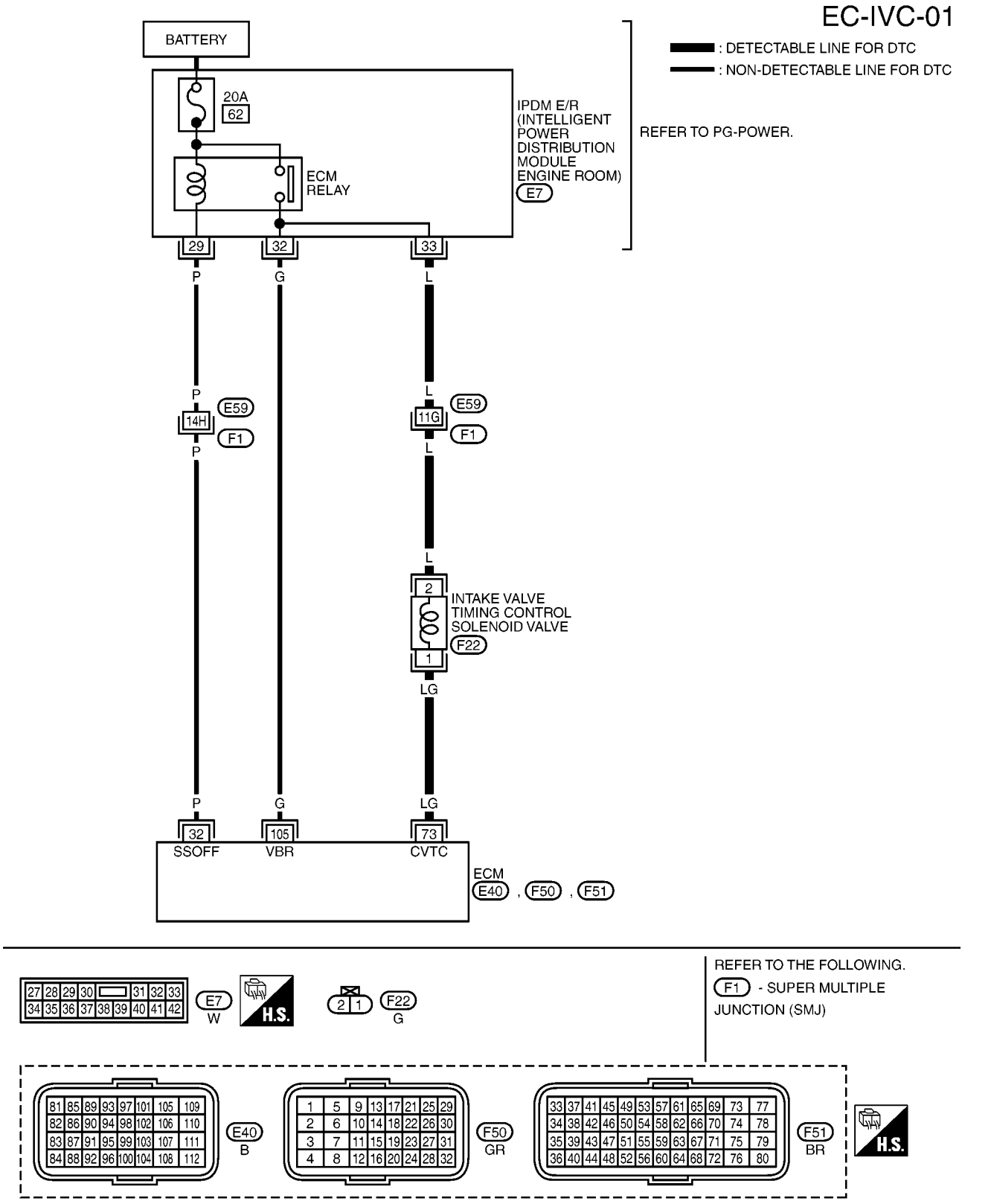

Specification data are reference values and are measured between each terminal and ground.
Pulse signal is measured by CONSULT-II.

CAUTION:
Do not use ECM ground terminals when measuring input/output voltage. Doing so may result in damage to the ECM's transistor. Use a ground other than ECM terminals, such as the ground.

TERMINAL NO.	WIRE COLOR	ITEM	CONDITION	DATA (DC Voltage)
32	P	ECM relay (Self shut-off)	**[Engine is running]** **[Ignition switch: OFF]** ● For a few seconds after turning ignition switch OFF	0 - 1.0V
			[Ignition switch: OFF] ● More than a few seconds after turning ignition switch OFF	BATTERY VOLTAGE (11 - 14V)
73	LG	Intake valve timing control solenoid valve	**[Engine is running]** ● **Warm-up condition** ● Idle speed	BATTERY VOLTAGE (11 - 14V)
			[Engine is running] ● **Warm-up condition** ● Engine speed: 2,000 rpm	7 - 10V★ 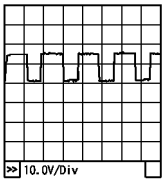 PBIA4937J
105	G	Power supply for ECM	**[Ignition switch: ON]**	BATTERY VOLTAGE (11 - 14V)

★: Average voltage for pulse signal (Actual pulse signal can be confirmed by oscilloscope.)

Diagnostic Procedure

BBS004OG

1. CHECK INTAKE VALVE TIMING CONTROL SOLENOID VALVE POWER SUPPLY CIRCUIT

1. Turn ignition switch OFF.
2. Disconnect intake valve timing control solenoid valve (1) harness connector.
3. Turn ignition switch ON.

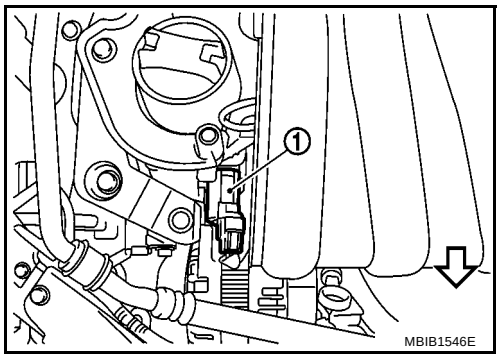

4. Check voltage between intake valve timing control solenoid valve terminal 2 and ground with CONSULT-II or tester.

Voltage: Battery voltage

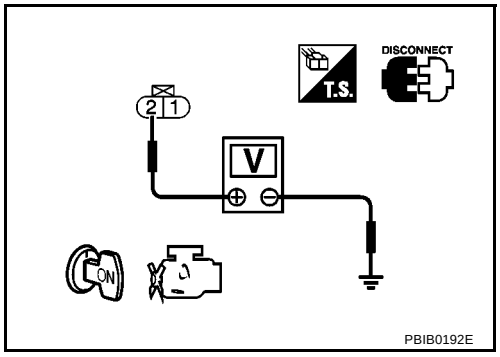

OK or NG

OK >> GO TO 3.
NG >> GO TO 2.

2. DETECT MALFUNCTION PART

Check the following.

- Harness connectors E59, F1
- Harness for open or short between intake valve timing control solenoid valve and IPDM E/R

>> Repair or replace harness or connectors.

3. CHECK INTAKE VALVE TIMING CONTROL SOLENOID VALVE OUTPUT SIGNAL CIRCUIT FOR OPEN AND SHORT

1. Turn ignition switch OFF.
2. Disconnect ECM harness connector.
3. Check harness continuity between ECM terminal 73 and intake valve timing control solenoid valve terminal 1. Refer to Wiring Diagram.

Continuity should exist.

4. Also check harness for short to ground and short to power.

OK or NG

OK >> GO TO 4.
NG >> Repair open circuit or short to ground or short to power in harness or connectors.

4. CHECK INTAKE VALVE TIMING CONTROL SOLENOID VALVE

Refer to EC-1429, "Component Inspection" .

OK or NG

OK >> GO TO 5.
NG >> Replace intake valve timing control solenoid valve.

5. CHECK INTERMITTENT INCIDENT

Refer to EC-1336, "TROUBLE DIAGNOSIS FOR INTERMITTENT INCIDENT" .

>> **INSPECTION END**

Component Inspection

BBS004OH

INTAKE VALVE TIMING CONTROL SOLENOID VALVE

1. Disconnect intake valve timing control solenoid valve harness connector.
2. Check resistance between intake valve timing control solenoid valve as follows.

Terminal	Resistance
1 and 2	6.7 - 7.7Ω [at 20°C (68°F)]
1 or 2 and ground	∞Ω (Continuity should not exist.)

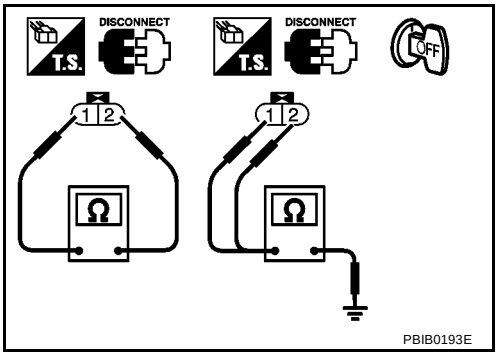

If NG, replace intake valve timing control solenoid valve.
If OK, go to next step.

3. Remove intake valve timing control solenoid valve.
4. Provide 12V DC between intake valve timing control solenoid valve terminals and then interrupt it. Make sure that the plunger moves as shown in the figure.

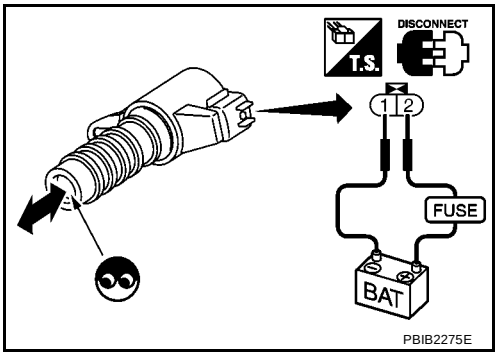

CAUTION:
Do not apply 12V DC continuously for 5 seconds or more. Doing so may result in damage to the coil in intake valve timing control solenoid valve.
If NG, replace intake valve timing control solenoid valve.

NOTE:
Always replace O-ring when intake valve timing control solenoid valve is removed.

Removal and Installation

BBS004OI

INTAKE VALVE TIMING CONTROL SOLENOID VALVE

Refer to EM-142, "TIMING CHAIN" .

DTC P1121 ELECTRIC THROTTLE CONTROL ACTUATOR

PFP:16119

Component Description

BBS004OJ

Electric throttle control actuator consists of throttle control motor, throttle position sensor, etc.
The throttle control motor is operated by the ECM and it opens and closes the throttle valve.
The throttle position sensor detects the throttle valve position, and the opening and closing speed of the throttle valve and feeds the voltage signals to the ECM. The ECM judges the current opening angle of the throttle valve from these signals and the ECM controls the throttle control motor to make the throttle valve opening angle properly in response to driving condition.

On Board Diagnosis Logic

BBS004OK

This self-diagnosis has the one trip detection logic.

DTC No.	Trouble diagnosis name	DTC detecting condition		Possible cause
P1121 1121	Electric throttle control actuator	A)	Electric throttle control actuator does not function properly due to the return spring malfunction.	● Electric throttle control actuator
		B)	Throttle valve opening angle in fail-safe mode is not in specified range.	
		C)	ECM detect the throttle valve is stuck open.	

FAIL-SAFE MODE

When the malfunction is detected, the ECM enters fail-safe mode and the MI lights up.

Detected items	Engine operating condition in fail-safe mode
Malfunction A	The ECM controls the electric throttle actuator by regulating the throttle opening around the idle position. The engine speed will not rise more than 2,000 rpm.
Malfunction B	ECM controls the electric throttle control actuator by regulating the throttle opening to 20 degrees or less.
Malfunction C	While the vehicle is driving, it slows down gradually by fuel cut. After the vehicle stops, the engine stalls. The engine can restart in N or P position (A/T), Neutral position (M/T) and engine speed will not exceed 1,000 rpm or more.

DTC Confirmation Procedure

BBS004OL

NOTE:

- **Perform PROCEDURE FOR MALFUNCTION A AND B first. If the DTC cannot be confirmed, perform PROCEDURE FOR MALFUNCTION C.**
- If DTC Confirmation Procedure has been previously conducted, always turn ignition switch OFF and wait at least 10 seconds before conducting the next test.

PROCEDURE FOR MALFUNCTION A AND B

With CONSULT-II

1. Turn ignition witch ON and wait at least 1 second.
2. Select “DATA MONITOR” mode with CONSULT-II.
3. Set shift lever to D position (A/T), 1st position (M/T) and wait at least 3 seconds.
4. Set shift lever to P position (A/T), Neutral position (M/T).
5. Turn ignition switch OFF and wait at least 10 seconds.
6. Turn ignition switch ON and wait at least 1 second.
7. Set shift lever to D position (A/T), 1st position (M/T) and wait at least 3 seconds.
8. Set shift lever to P position (A/T), Neutral position (M/T).
9. Turn ignition switch OFF, wait at least 10 seconds and then turn ON.
10. If DTC is detected, go to EC-1431, "Diagnostic Procedure" .

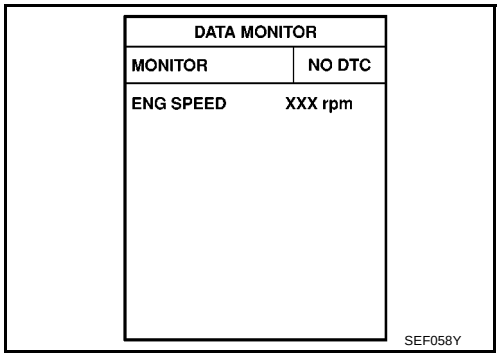

Without CONSULT-II

1. Turn ignition witch ON and wait at least 1 second.
2. Set shift lever to D position (A/T), 1st position (M/T) and wait at least 3 seconds.
3. Set shift lever to P position (A/T), Neutral position (M/T).
4. Turn ignition switch OFF and wait at least 10 seconds.
5. Turn ignition switch ON and wait at least 1 second.
6. Set shift lever to D position (A/T), 1st position (M/T) and wait at least 3 seconds.
7. Set shift lever to P position (A/T), Neutral position (M/T).
8. Turn ignition switch OFF, wait at least 10 seconds and then turn ON.
9. Perform Diagnostic Test Mode II (Self-diagnostic results) with ECM.
10. If DTC is detected, go to EC-1431, "Diagnostic Procedure" .

PROCEDURE FOR MALFUNCTION C

With CONSULT-II

1. Turn ignition switch ON and wait at least 1 second.
2. Select “DATA MONITOR” mode with CONSULT-II.
3. Set shift lever to D position (A/T), 1st position (M/T) and wait at least 3 seconds.
4. Set shift lever to P position (A/T), Neutral position (M/T).
5. Start engine and let it idle for 3 seconds.
6. If DTC is detected, go to EC-1431, "Diagnostic Procedure" .

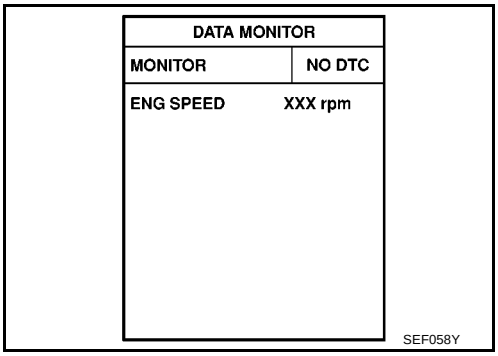

Without CONSULT-II

1. Turn ignition witch ON and wait at least 1 second.
2. Set shift lever to D position (A/T), 1st position (M/T) and wait at least 3 seconds.
3. Set shift lever to P position (A/T), Neutral position (M/T).
4. Start engine and let it idle for 3 seconds.
5. Turn ignition switch OFF, wait at least 10 seconds and then turn ON.
6. Perform Diagnostic Test Mode II (Self-diagnostic results) with ECM.
7. If DTC is detected, go to EC-1431, "Diagnostic Procedure" .

Diagnostic Procedure

BBS004OM

1. CHECK ELECTRIC THROTTLE CONTROL ACTUATOR VISUALLY

1. Remove the intake air duct.
2. Check if a foreign matter is caught between the throttle valve (1) and the housing.

– ⇦: Vehicle front

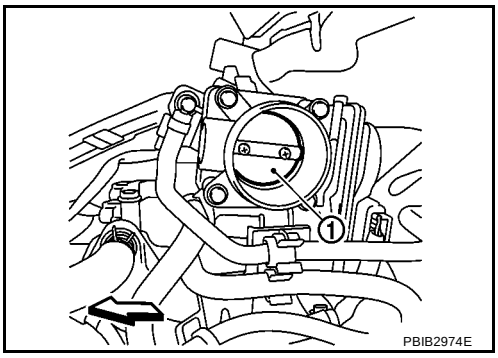

OK or NG

OK >> GO TO 2.
NG >> Remove the foreign matter and clean the electric throttle control actuator inside.

2. REPLACE ELECTRIC THROTTLE CONTROL ACTUATOR

1. Replace the electric throttle control actuator.
2. Perform EC-1279, "Throttle Valve Closed Position Learning" .
3. Perform EC-1279, "Idle Air Volume Learning" .

>> **INSPECTION END**

Removal and Installation

BBS004ON

Refer to EM-120, "INTAKE MANIFOLD" .

DTC P1122 ELECTRIC THROTTLE CONTROL FUNCTION

PFP:16119

Description

BBS004OO

NOTE:
If DTC P1122 is displayed with DTC P1121 or P1126, first perform the trouble diagnosis for DTC P1121 or P1126. Refer to EC-1430, "DTC P1121 ELECTRIC THROTTLE CONTROL ACTUATOR" or EC-1439, "DTC P1124, P1126 THROTTLE CONTROL MOTOR RELAY" .

Electric throttle control actuator consists of throttle control motor, throttle position sensor, etc.
The throttle control motor is operated by the ECM and it opens and closes the throttle valve.
The current opening angle of the throttle valve is detected by the throttle position sensor and it provides feedback to the ECM to control the throttle control motor to make the throttle valve opening angle properly in response to driving condition.

On Board Diagnosis Logic

BBS004OP

This self-diagnosis has the one trip detection logic.

DTC No.	Trouble diagnosis name	DTC detecting condition	Possible cause
P1122 1122	Electric throttle control performance	Electric throttle control function does not operate properly.	● Harness or connectors (Throttle control motor circuit is open or shorted) ● Electric throttle control actuator

FAIL-SAFE MODE

When the malfunction is detected, ECM enters fail-safe mode and the MI lights up.

Engine operating condition in fail-safe mode
ECM stops the electric throttle control actuator control, throttle valve is maintained at a fixed opening (approx. 5 degrees) by the return spring.

DTC Confirmation Procedure

BBS004OQ

NOTE:
If DTC Confirmation Procedure has been previously conducted, always turn ignition switch OFF and wait at least 10 seconds before conducting the next test.

TESTING CONDITION:
Before performing the following procedure, confirm that battery voltage is more than 11V when engine is running.

WITH CONSULT-II

1. Turn ignition switch ON and wait at least 2 seconds.
2. Select “DATA MONITOR” mode with CONSULT-II.
3. Start engine and let it idle for 5 seconds.
4. If DTC is detected, go to EC-1435, "Diagnostic Procedure" .

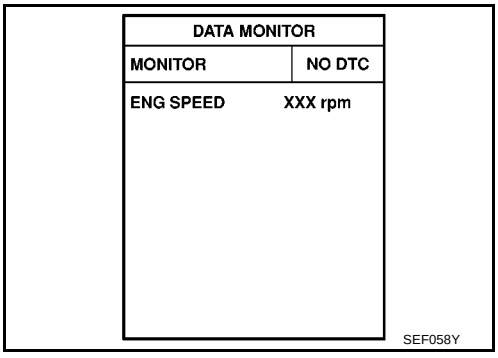

WITHOUT CONSULT-II

1. Turn ignition switch ON and wait at least 2 seconds.
2. Start engine and let it idle for 5 seconds.
3. Turn ignition switch OFF, wait at least 10 seconds and then turn ON.
4. Perform Diagnostic Test Mode II (Self-diagnostic results) with ECM.
5. If DTC is detected, go to EC-1435, "Diagnostic Procedure" .

Wiring Diagram

BBS004OR

EC-ETC1-01

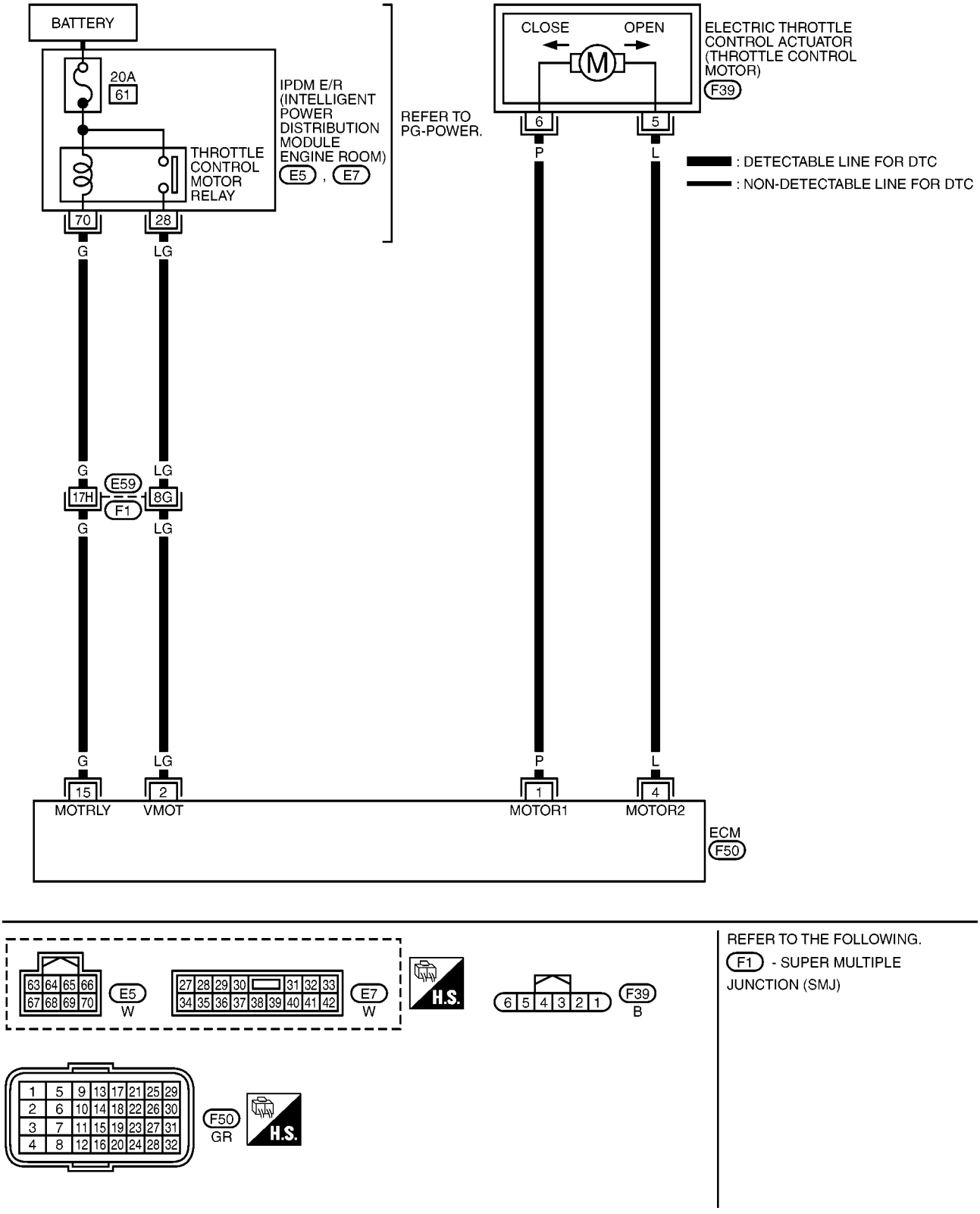

Specification data are reference values and are measured between each terminal and ground.
Pulse signal is measured by CONSULT-II.

CAUTION:
Do not use ECM ground terminals when measuring input/output voltage. Doing so may result in damage to the ECM's transistor. Use a ground other than ECM terminals, such as the ground.

TERMINAL NO.	WIRE COLOR	ITEM	CONDITION	DATA (DC Voltage)
1	P	Throttle control motor (Open)	**[Ignition switch: ON]** ● Engine stopped ● Shift lever: D (A/T), 1st (M/T) ● Accelerator pedal: Fully depressed	0 - 14V★ 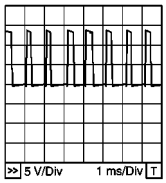 PBIB1105E
2	LG	Throttle control motor relay power supply	**[Ignition switch: ON]**	BATTERY VOLTAGE (11 - 14V)
4	L	Throttle control motor (Close)	**[Ignition switch: ON]** ● Engine stopped ● Shift lever: D (A/T), 1st (M/T) ● Accelerator pedal: Released	0 - 14V★ 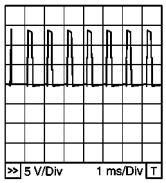 PBIB1104E
15	G	Throttle control motor relay	**[Ignition switch: OFF]**	BATTERY VOLTAGE (11 - 14V)
			[Ignition switch: ON]	0 - 1.0V

★: Average voltage for pulse signal (Actual pulse signal can be confirmed by oscilloscope.)

Diagnostic Procedure

BBS004OS

1. CHECK GROUND CONNECTIONS

1. Turn ignition switch OFF.
2. Loosen and retighten ground screws on the body.
   Refer to EC-1342, "Ground Inspection" .

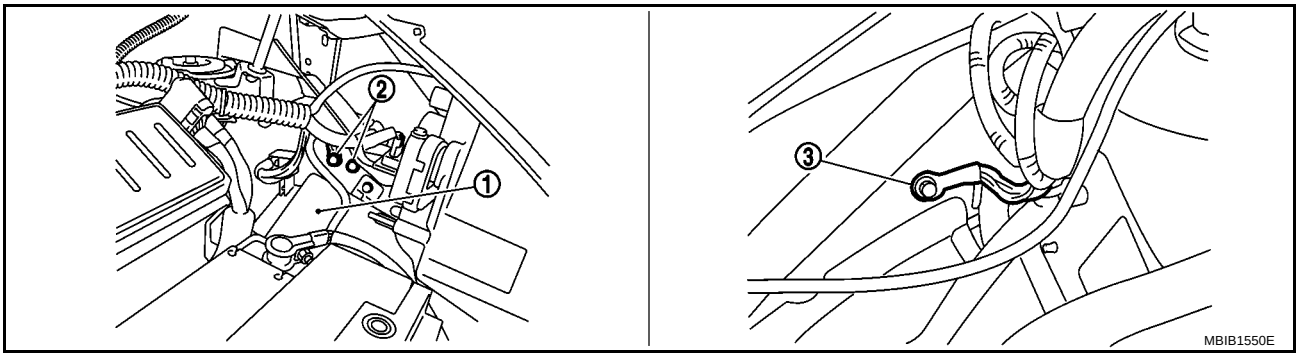

1. IPDM E/R
2. Body ground
3. Body ground

OK or NG

OK >> GO TO 2.
NG >> Repair or replace ground connections.

2. CHECK THROTTLE CONTROL MOTOR RELAY INPUT SIGNAL CIRCUIT-I

Check voltage between ECM terminal 2 and ground under the following conditions with CONSULT-II or tester.

Ignition switch	Voltage
OFF	Approximately 0V
ON	Battery voltage (11 - 14V)

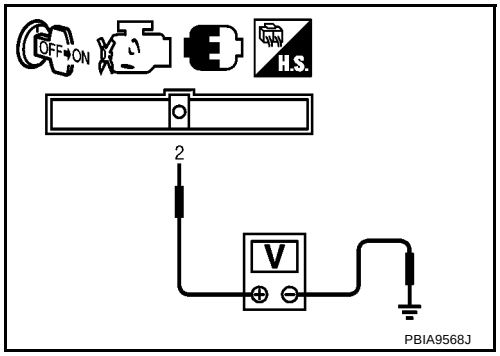

OK or NG

OK >> GO TO 10.
NG >> GO TO 3.

3. CHECK THROTTLE CONTROL MOTOR RELAY POWER SUPPLY CIRCUIT-I

1. Turn ignition switch OFF.
2. Check voltage between ECM terminal 15 and ground with CONSULT-II or tester.

Voltage: Battery voltage

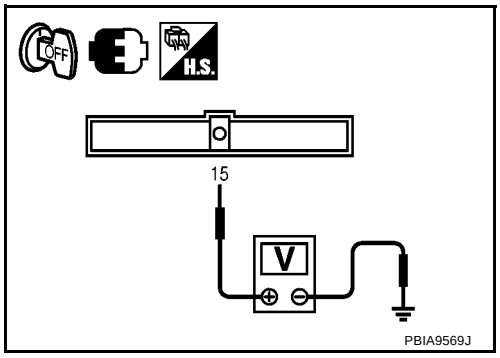

OK or NG

OK >> GO TO 7.
NG >> GO TO 4.

4. CHECK THROTTLE CONTROL MOTOR RELAY POWER SUPPLY CIRCUIT-II

1. Disconnect ECM harness connector.
2. Disconnect IPDM E/R harness connector E5.
3. Check harness continuity between ECM terminal 15 and IPDM E/R terminal 70. Refer to Wiring Diagram.

Continuity should exist.

4. Also check harness for short to ground and short to power.

OK or NG

OK >> GO TO 6.
NG >> GO TO 5.

5. DETECT MALFUNCTIONING PART

Check the following.

- Harness connectors E59, F1
- Harness for open or short between ECM and IPDM E/R

>> Repair open circuit or short to ground or short to power in harness or connectors.

6. CHECK FUSE

1. Disconnect 20A fuse.
2. Check 20A fuse for blown.

OK or NG

OK >> GO TO 9.
NG >> Replace 20A fuse.

7. CHECK THROTTLE CONTROL MOTOR RELAY INPUT SIGNAL CIRCUIT-II

1. Disconnect ECM harness connector.
2. Disconnect IPDM E/R harness connector E7.
3. Check harness continuity between ECM terminal 2 and IPDM E/R terminal 28.
   Refer to Wiring Diagram.

   Continuity should exist.

4. Also check harness for short to ground and short to power.

OK or NG

OK >> GO TO 9.
NG >> GO TO 8.

8. DETECT MALFUNCTIONING PART

Check the following.

- Harness connectors E59, F1
- Harness for open or short between ECM and IPDM E/R

>> Repair open circuit or short to ground or short to power in harness or connectors.

9. CHECK INTERMITTENT INCIDENT

Refer to EC-1336, "TROUBLE DIAGNOSIS FOR INTERMITTENT INCIDENT" .

OK or NG

OK >> Replace IPDM E/R. Refer to PG-18, "IPDM E/R (INTELLIGENT POWER DISTRIBUTION MODULE ENGINE ROOM)" .
NG >> Repair or replace harness or connectors.

10. CHECK THROTTLE CONTROL MOTOR OUTPUT SIGNAL CIRCUIT FOR OPEN OR SHORT

1. Turn ignition switch OFF.
2. Disconnect electric throttle control actuator (1) harness connector.

– ⇦: Vehicle front

3. Disconnect ECM harness connector.
4. Check harness continuity between the following terminals.
   Refer to Wiring Diagram.

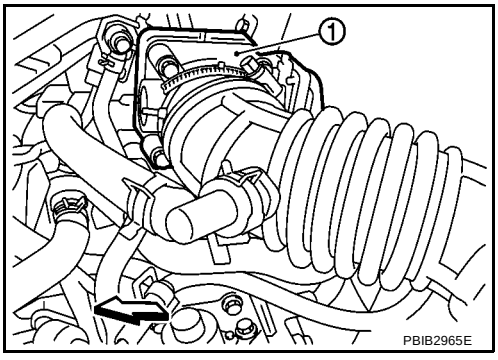

Electric throttle control actuator terminal	ECM terminal	Continuity
5	1	Should not exist
	4	Should exist
6	1	Should exist
	4	Should not exist

5. Also check harness for short to ground and short to power.

OK or NG

OK >> GO TO 11.
NG >> Repair or replace.

11. CHECK ELECTRIC THROTTLE CONTROL ACTUATOR VISUALLY

1. Remove the intake air duct.
2. Check if foreign matter is caught between the throttle valve (1) and the housing.

– ⇦: Vehicle front
– Illustration shows the view with intake air duct removed.

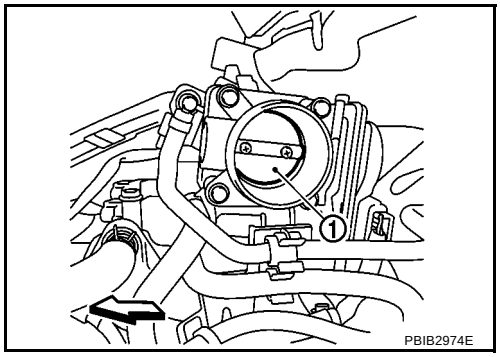

OK or NG

OK >> GO TO 12.
NG >> Remove the foreign matter and clean the electric throttle control actuator inside.

12. CHECK THROTTLE CONTROL MOTOR

Refer to EC-1438, "Component Inspection" .

OK or NG

OK >> GO TO 13.
NG >> GO TO 14.

13. CHECK INTERMITTENT INCIDENT

Refer to EC-1336, "TROUBLE DIAGNOSIS FOR INTERMITTENT INCIDENT" .

OK or NG

OK >> GO TO 14.
NG >> Repair or replace harness or connectors.

14. REPLACE ELECTRIC THROTTLE CONTROL ACTUATOR

1. Replace the electric throttle control actuator.
2. Perform EC-1279, "Throttle Valve Closed Position Learning" .
3. Perform EC-1279, "Idle Air Volume Learning" .

>> **INSPECTION END**

Component Inspection

BBS004OT

THROTTLE CONTROL MOTOR

1. Disconnect electric throttle control actuator harness connector.
2. Check resistance between terminals 5 and 6.

Resistance: Approximately 1 - 15 Ω [at 25 °C (77°F)]

3. If NG, replace electric throttle control actuator and go to next step.
4. Perform EC-1279, "Throttle Valve Closed Position Learning" .
5. Perform EC-1279, "Idle Air Volume Learning" .

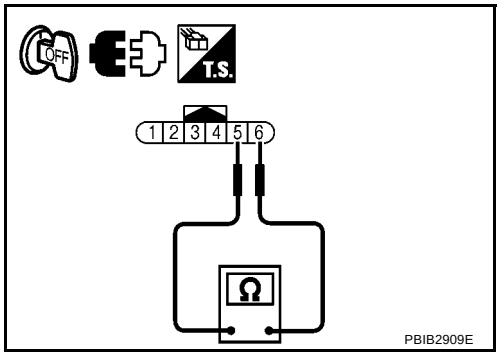

Removal and Installation

BBS004OU

ELECTRIC THROTTLE CONTROL ACTUATOR

Refer to EM-120, "INTAKE MANIFOLD" .

DTC P1124, P1126 THROTTLE CONTROL MOTOR RELAY

PFP:16119

Component Description

BBS004OV

Power supply for the throttle control motor is provided to the ECM via throttle control motor relay. The throttle control motor relay is ON/OFF controlled by the ECM. When the ignition switch is turned ON, the ECM sends an ON signal to throttle control motor relay and battery voltage is provided to the ECM. When the ignition switch is turned OFF, the ECM sends an OFF signal to throttle control motor relay and battery voltage is not provided to the ECM.

CONSULT-II Reference Value in Data Monitor Mode

BBS004OW

Specification data are reference values.

MONITOR ITEM	CONDITION	SPECIFICATION
THRTL RELAY	● Ignition switch: ON	ON

On Board Diagnosis Logic

BBS004OX

These self-diagnoses have the one trip detection logic.

DTC No.	Trouble diagnosis name	DTC detecting condition	Possible cause
P1124 1124	Throttle control motor relay circuit short	ECM detect the throttle control motor relay is stuck ON.	● Harness or connectors (Throttle control motor relay circuit is shorted) ● Throttle control motor relay
P1126 1126	Throttle control motor relay circuit open	ECM detects a voltage of power source for throttle control motor is excessively low.	● Harness or connectors (Throttle control motor relay circuit is open) ● Throttle control motor relay

FAIL-SAFE MODE

When the malfunction is detected, ECM enters fail-safe mode and the MI lights up.

Engine operating condition in fail-safe mode
ECM stops the electric throttle control actuator control, throttle valve is maintained at a fixed opening (approx. 5 degrees) by the return spring.

DTC Confirmation Procedure

BBS004OY

NOTE:
If DTC Confirmation Procedure has been previously conducted, always turn ignition switch OFF and wait at least 10 seconds before conducting the next test.

PROCEDURE FOR DTC P1124

With CONSULT-II

1. Turn ignition switch ON and wait at least 1 seconds.
2. Select “DATA MONITOR” mode with CONSULT-II.
3. If DTC is detected, go to EC-1442, "Diagnostic Procedure" .

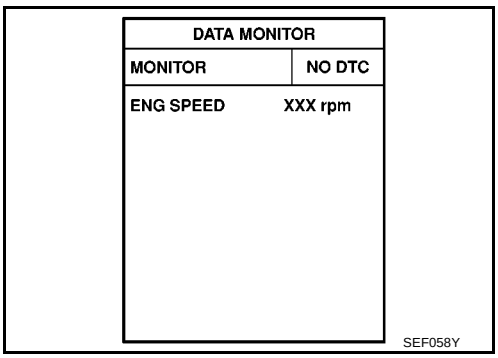

Without CONSULT-II

1. Turn ignition switch ON and wait at least 1 second.
2. Turn ignition switch OFF, wait at least 10 seconds and then turn ON.

3. Perform Diagnostic Test Mode II (Self-diagnostic results) with ECM.
4. If DTC is detected, go to EC-1442, "Diagnostic Procedure" .

PROCEDURE FOR DTC P1126

TESTING CONDITION:
Before performing the following procedure, confirm that battery voltage is more than 8V.

With CONSULT-II

1. Turn ignition switch ON and wait at least 2 second.
2. Select “DATA MONITOR” mode with CONSULT-II.
3. Start engine and let it idle for 5 seconds.
4. If DTC is detected, go to EC-1442, "Diagnostic Procedure" .

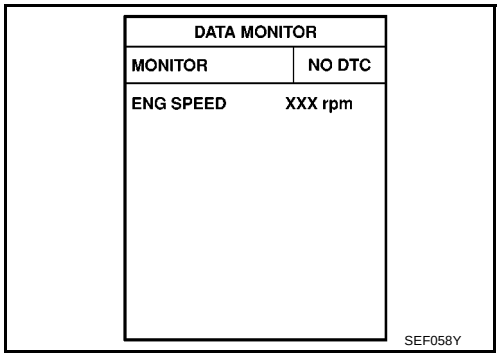

Without CONSULT-II

1. Turn ignition switch ON and wait at least 2 seconds.
2. Start engine and let it idle for 5 seconds.
3. Turn ignition switch OFF, wait at least 10 seconds and then turn ON.
4. Perform Diagnostic Test Mode II (Self-diagnostic results) with ECM.
5. If DTC is detected, go to EC-1442, "Diagnostic Procedure" .

Wiring Diagram

BBS004OZ

EC-ETC2-01

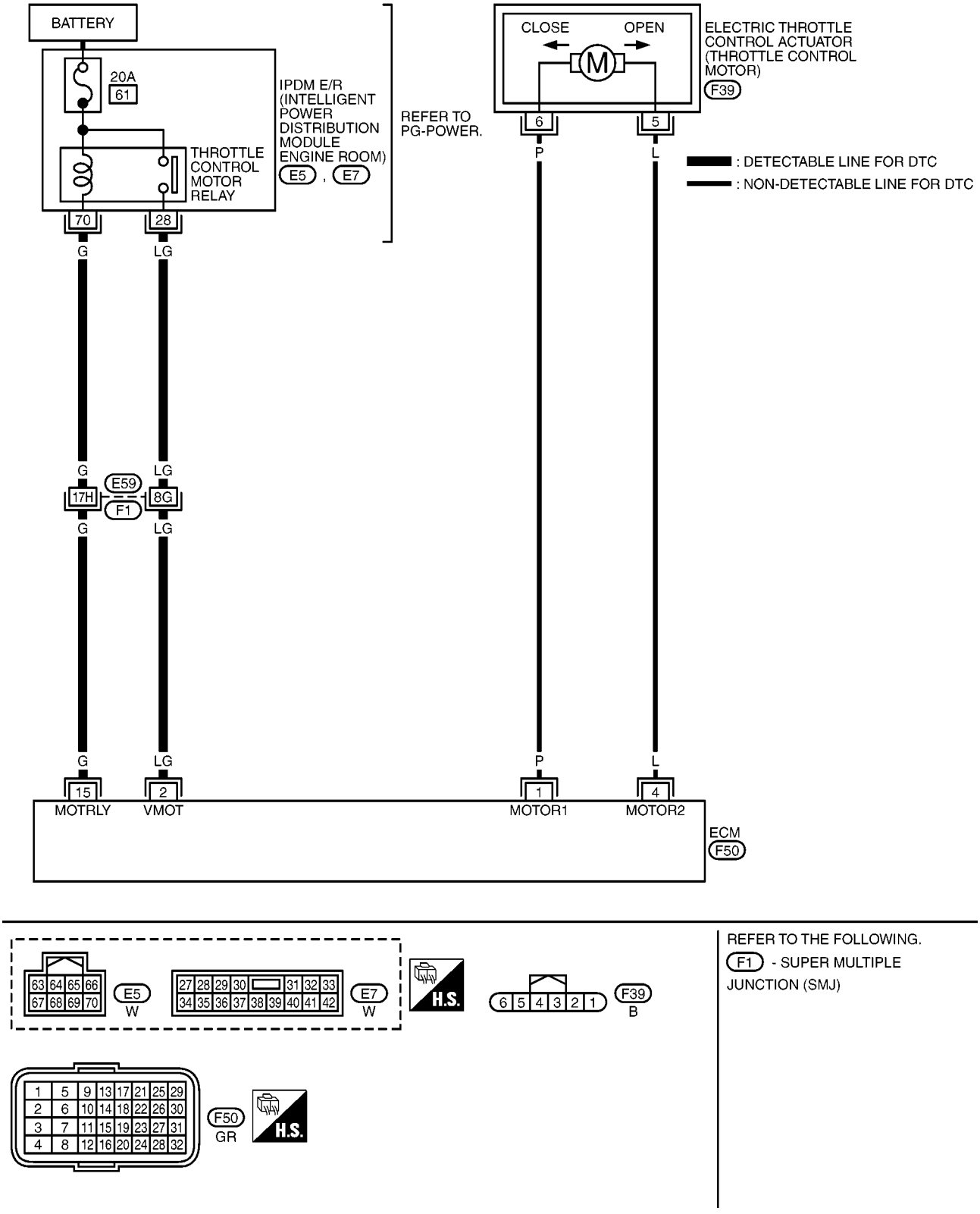

MBWA1473E

Specification data are reference values and are measured between each terminal and ground.
Pulse signal is measured by CONSULT-II.

CAUTION:

Do not use ECM ground terminals when measuring input/output voltage. Doing so may result in damage to the ECM's transistor. Use a ground other than ECM terminals, such as the ground.

TERMINAL NO.	WIRE COLOR	ITEM	CONDITION	DATA (DC Voltage)
1	P	Throttle control motor (Open)	**[Ignition switch: ON]** ● Engine stopped ● Shift lever: D (A/T), 1st (M/T) ● Accelerator pedal: Fully depressed	0 - 14V★ 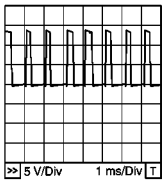 PBIB1105E
2	LG	Throttle control motor relay power supply	**[Ignition switch: ON]**	BATTERY VOLTAGE (11 - 14V)
4	L	Throttle control motor (Close)	**[Ignition switch: ON]** ● Engine stopped ● Shift lever: D D (A/T), 1st (M/T) ● Accelerator pedal: Released	0 - 14V★ 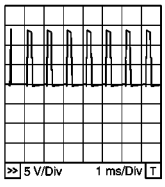 PBIB1104E
15	G	Throttle control motor relay	**[Ignition switch: OFF]**	BATTERY VOLTAGE (11 - 14V)
			[Ignition switch: ON]	0 - 1.0V

★: Average voltage for pulse signal (Actual pulse signal can be confirmed by oscilloscope.)

Diagnostic Procedure

BBS004P0

1. CHECK THROTTLE CONTROL MOTOR RELAY POWER SUPPLY CIRCUIT-I

1. Turn ignition switch OFF.
2. Check voltage between ECM terminal 15 and ground with CONSULT-II or tester.

Voltage: Battery voltage

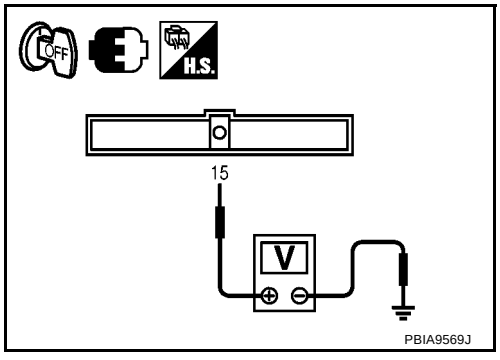

PBIA9569J

OK or NG

OK >> GO TO 5.
NG >> GO TO 2.

2. CHECK THROTTLE CONTROL MOTOR RELAY POWER SUPPLY CIRCUIT-II

1. Disconnect ECM harness connector.
2. Disconnect IPDM E/R harness connector E5.
3. Check continuity between ECM terminal 15 and IPDM E/R terminal 70.
   Refer to Wiring Diagram.

   Continuity should exist.

4. Also check harness for short to ground and short to power.

OK or NG

OK >> GO TO 4.
NG >> GO TO 3.

3. DETECT MALFUNCTIONING PART

Check the following.

- Harness connectors E59, F1
- Harness for open or short between ECM and IPDM E/R

>> Repair open circuit or short to ground or short to power in harness or connectors.

4. CHECK FUSE

1. Disconnect 20A fuse.
2. Check 20A fuse for blown.

OK or NG

OK >> GO TO 8.
NG >> Replace 20A fuse.

5. CHECK THROTTLE CONTROL MOTOR RELAY INPUT SIGNAL CIRCUIT-I

1. Check voltage between ECM terminal 2 and ground under the following conditions with CONSULT-II or tester.

Ignition switch	Voltage
OFF	Approximately 0V
ON	Battery voltage (11 - 14V)

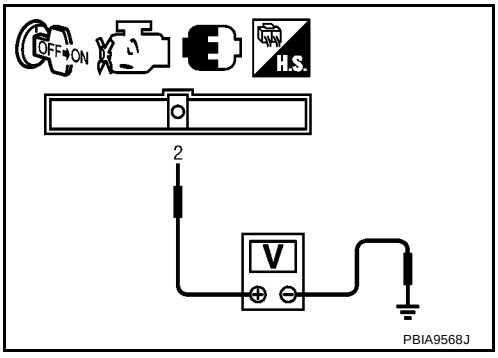

OK or NG

OK >> GO TO 8.
NG >> GO TO 6.

6. CHECK THROTTLE CONTROL MOTOR RELAY INPUT SIGNAL CIRCUIT-II

1. Turn ignition switch OFF.
2. Disconnect ECM harness connector.
3. Disconnect IPDM E/R harness connector E7.
4. Check continuity between ECM terminal 2 and IPDM E/R terminal 28.
   Refer to Wiring Diagram.

   Continuity should exist.

5. Also check harness for short to ground and short to power.

OK or NG

OK >> GO TO 8.
NG >> GO TO 7.

7. DETECT MALFUNCTIONING PART

Check the following.

- Harness connectors E59, F1
- Harness for open or short between ECM and IPDM E/R

>> Repair open circuit or short to ground or short to power in harness or connectors.

8. CHECK INTERMITTENT INCIDENT

Refer to EC-1336, "TROUBLE DIAGNOSIS FOR INTERMITTENT INCIDENT" .

OK or NG

OK >> Replace IPDM E/R. Refer to PG-18, "IPDM E/R (INTELLIGENT POWER DISTRIBUTION MODULE ENGINE ROOM)" .

NG >> Repair or replace harness or connectors.

DTC P1128 THROTTLE CONTROL MOTOR

PFP:16119

Component Description

BBS004P1

The throttle control motor is operated by the ECM and it opens and closes the throttle valve.
The current opening angle of the throttle valve is detected by the throttle position sensor and it provides feedback to the ECM to control the throttle control motor to make the throttle valve opening angle properly in response to driving condition.

On Board Diagnosis Logic

BBS004P2

This self-diagnosis has the one trip detection logic.

DTC No.	Trouble diagnosis name	DTC detecting condition	Possible cause
P1128 1128	Throttle control motor circuit short	ECM detects short in both circuits between ECM and throttle control motor.	● Harness or connectors (Throttle control motor circuit is shorted.) ● Electric throttle control actuator (Throttle control motor)

FAIL-SAFE MODE

When the malfunction is detected, ECM enters fail-safe mode and the MI lights up.

Engine operating condition in fail-safe mode
ECM stops the electric throttle control actuator control, throttle valve is maintained at a fixed opening (approx. 5 degrees) by the return spring.

DTC Confirmation Procedure

BBS004P3

NOTE:
If DTC Confirmation Procedure has been previously conducted, always turn ignition switch OFF and wait at least 10 seconds before conducting the next test.

WITH CONSULT-II

1. Turn ignition switch ON and wait at least 2 seconds.
2. Select “DATA MONITOR” mode with CONSULT-II.
3. Start engine and let it idle for 5 seconds.
4. If DTC is detected, go to EC-1447, "Diagnostic Procedure" .

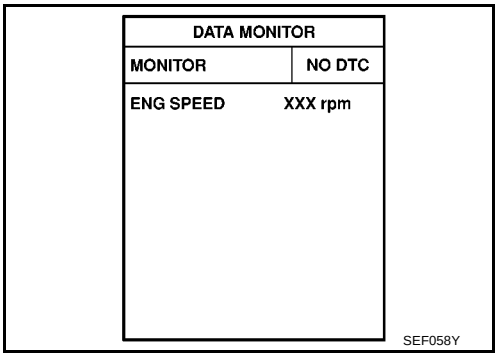

WITHOUT CONSULT-II

1. Turn ignition switch ON and wait at least 2 seconds.
2. Start engine and let it idle for 5 seconds.
3. Turn ignition switch OFF, wait at least 10 seconds and then turn ON.
4. Perform Diagnostic Test Mode II (Self-diagnostic results) with ECM.
5. If DTC is detected, go to EC-1447, "Diagnostic Procedure" .

Wiring Diagram

BBS004P4

EC-ETC3-01

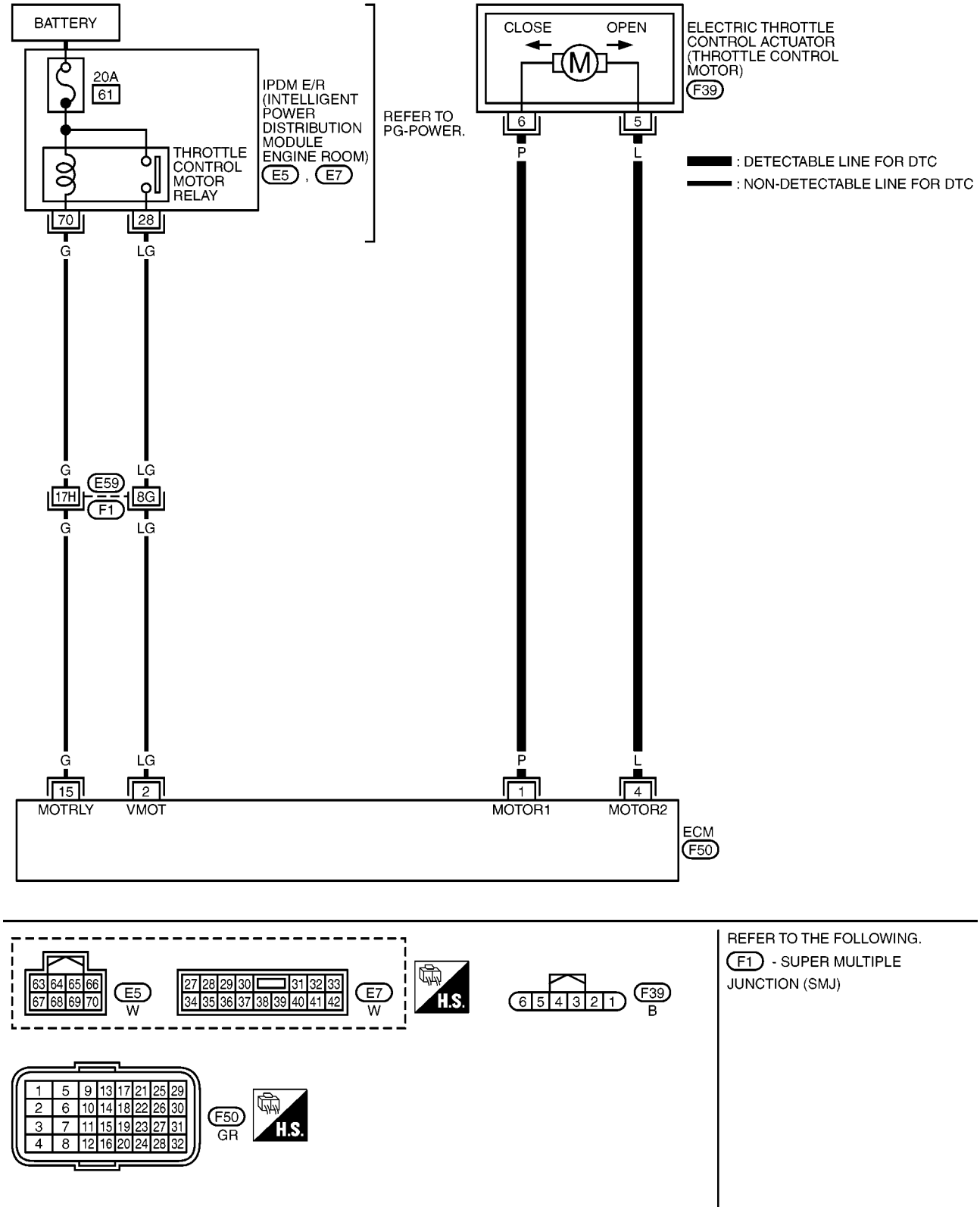

Specification data are reference values and are measured between each terminal and ground.
Pulse signal is measured by CONSULT-II.

CAUTION:
Do not use ECM ground terminals when measuring input/output voltage. Doing so may result in damage to the ECM's transistor. Use a ground other than ECM terminals, such as the ground.

TERMINAL NO.	WIRE COLOR	ITEM	CONDITION	DATA (DC Voltage)
1	P	Throttle control motor (Open)	**[Ignition switch: ON]** ● Engine stopped ● Shift lever: D (A/T), 1st (M/T) ● Accelerator pedal: Fully depressed	0 - 14V★ 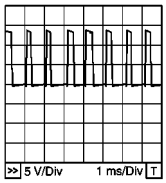 PBIB1105E
2	LG	Throttle control motor relay power supply	**[Ignition switch: ON]**	BATTERY VOLTAGE (11 - 14V)
4	L	Throttle control motor (Close)	**[Ignition switch: ON]** ● Engine stopped ● Shift lever: D D (A/T), 1st (M/T) ● Accelerator pedal: Released	0 - 14V★ 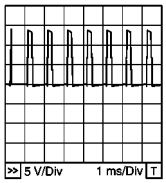 PBIB1104E
15	G	Throttle control motor relay	**[Ignition switch: OFF]**	BATTERY VOLTAGE (11 - 14V)
			[Ignition switch: ON]	0 - 1.0V

★: Average voltage for pulse signal (Actual pulse signal can be confirmed by oscilloscope.)

Diagnostic Procedure

BBS004P5

1. CHECK GROUND CONNECTIONS

1. Turn ignition switch OFF.
2. Loosen and retighten ground screws on the body.
   Refer to EC-1342, "Ground Inspection" .

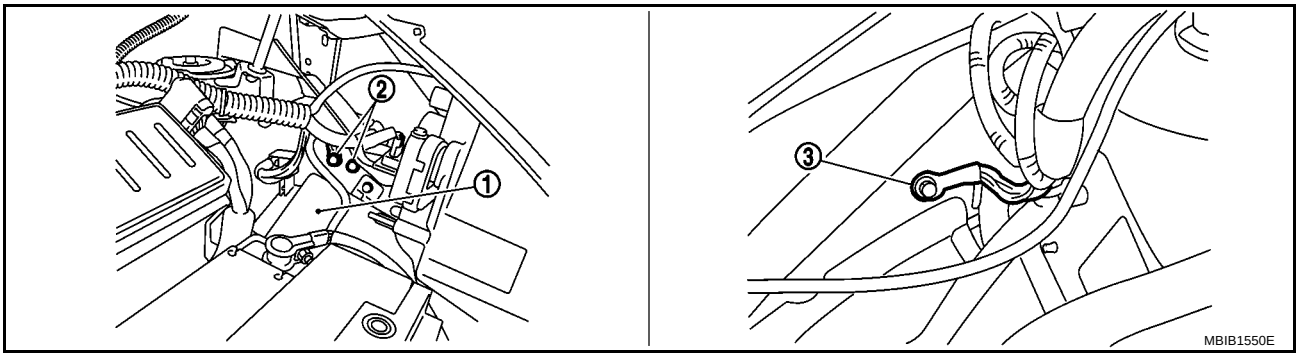

1. IPDM E/R
2. Body ground
3. Body ground

OK or NG

OK >> GO TO 2.
NG >> Repair or replace ground connections.

2. CHECK THROTTLE CONTROL MOTOR OUTPUT SIGNAL CIRCUIT FOR OPEN AND SHORT

1. Disconnect electric throttle control actuator (1) harness connector.

– ⇦: Vehicle front

2. Disconnect ECM harness connector.
3. Check harness continuity between the following terminals. Refer to Wiring Diagram.

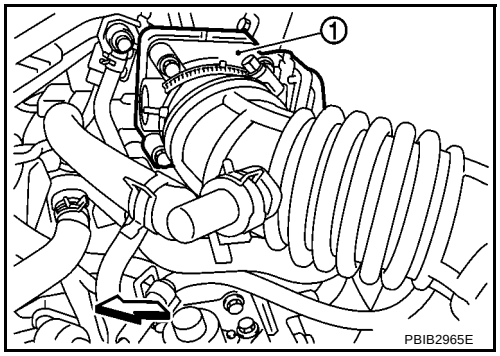

Electric throttle control actuator terminal	ECM terminal	Continuity
5	1	Should not exist
	4	Should exist
6	1	Should exist
	4	Should not exist

4. Also check harness for short to ground and short to power.

OK or NG

OK >> GO TO 3.
NG >> Repair or replace.

3. CHECK THROTTLE CONTROL MOTOR

Refer to EC-1449, "Component Inspection" .

OK or NG

OK >> GO TO 4.
NG >> GO TO 5.

4. CHECK INTERMITTENT INCIDENT

Refer to EC-1336, "TROUBLE DIAGNOSIS FOR INTERMITTENT INCIDENT" .

OK or NG

OK >> GO TO 5.
NG >> Repair or replace harness or connectors.

5. REPLACE ELECTRIC THROTTLE CONTROL ACTUATOR

1. Replace the electric throttle control actuator.
2. Perform EC-1279, "Throttle Valve Closed Position Learning" .
3. Perform EC-1279, "Idle Air Volume Learning" .

>> **INSPECTION END**

Component Inspection

BBS004P6

THROTTLE CONTROL MOTOR

1. Disconnect electric throttle control actuator harness connector.
2. Check resistance between terminals 5 and 6.

Resistance: Approximately 1 - 15 Ω [at 25 °C (77°F)]

3. If NG, replace electric throttle control actuator and go to next step.
4. Perform EC-1279, "Throttle Valve Closed Position Learning" .
5. Perform EC-1279, "Idle Air Volume Learning" .

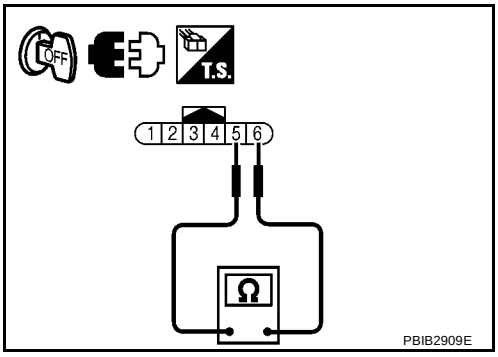

Removal and Installation

BBS004P7

ELECTRIC THROTTLE CONTROL ACTUATOR

Refer to EM-120, "INTAKE MANIFOLD" .

DTC P1212 TCS COMMUNICATION LINE

PFP:47850

Description

BBS004PC

NOTE:

- **If DTC P1212 is displayed with DTC U1000 or U1001, first perform the trouble diagnosis for DTC U1000, U1001. Refer to EC-1344, "DTC U1000, U1001 CAN COMMUNICATION LINE" .**
- **If DTC P1212 is displayed with DTC U1010, first perform the trouble diagnosis for DTC U1010. Refer to EC-1347, "DTC U1010 CAN COMMUNICATION" .**

This CAN communication line is used to control the smooth engine operation during the TCS operation. Pulse signals are exchanged between ECM and “ABS actuator and electric unit (control unit)”.
Be sure to erase the malfunction information such as DTC not only for “ABS actuator and electric unit (control unit)” but also for ECM after TCS related repair.

On Board Diagnosis Logic

BBS004PD

The MI will not light up for this self-diagnosis.
Freeze frame data is not stored in the ECM for this self-diagnosis.

DTC No.	Trouble diagnosis name	DTC detecting condition	Possible cause
P1212 1212	TCS communication line	ECM can not receive the information from “ABS actuator and electric unit (control unit)” continuously.	● Harness or connectors (The CAN communication line is open or shorted.) ● ABS actuator and electric unit (control unit) ● Dead (Weak) battery

DTC Confirmation Procedure

BBS004PE

TESTING CONDITION:
Before performing the following procedure, confirm that battery voltage is more than 10.5V at idle.

WITH CONSULT-II

1. Turn ignition switch ON.
2. Select “DATA MONITOR” mode with CONSULT-II.
3. Start engine and let it idle for at least 10 seconds.
4. If 1st trip DTC is detected, go to EC-1450, "Diagnostic Procedure" .

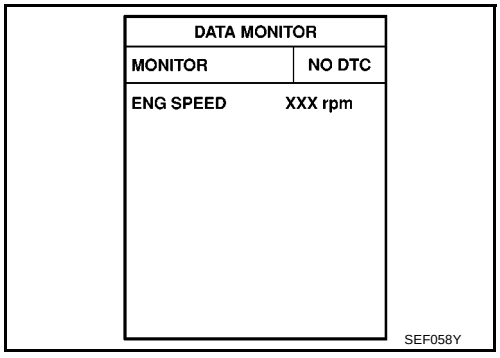

WITHOUT CONSULT-II

1. Start engine and let it idle for at least 10 seconds.
2. Turn ignition switch OFF and wait at least 10 seconds and then turn ON.
3. Perform Diagnostic Test Mode II (Self-diagnostic results) with ECM.
4. If 1st trip DTC is detected, go to EC-1450, "Diagnostic Procedure" .

Diagnostic Procedure

BBS004PF

Refer to BRC-49, "TROUBLE DIAGNOSIS" .

DTC P1217 ENGINE OVER TEMPERATURE

PFP:00000

System Description

BBS004UV

SYSTEM DESCRIPTION

NOTE:

- **If DTC P1217 is displayed with DTC U1000 or U1001, first perform the trouble diagnosis for DTC U1000, U1001. Refer to EC-1344, "DTC U1000, U1001 CAN COMMUNICATION LINE" .**
- **If DTC P1217 is displayed with DTC U1010, first perform the trouble diagnosis for DTC U1010. Refer to EC-1347, "DTC U1010 CAN COMMUNICATION" .**

Cooling Fan Control

Sensor	Input Signal to ECM	ECM function	Actuator
Crankshaft position sensor (POS) Camshaft position sensor (PHASE)	Engine speed*1	Cooling fan control	IPDM E/R (Cooling fan relays)
Battery	Battery voltage*1		
Wheel sensor	Vehicle speed*2		
Engine coolant temperature sensor	Engine coolant temperature		
Air conditioner switch*3	Air conditioner ON signal*2		
Refrigerant pressure sensor*3	Refrigerant pressure		

*1: The ECM determines the start signal status by the signals of engine speed and battery voltage.
*2: This signal is sent to ECM through CAN communication line.
*3: Models with air conditioner

The ECM controls the cooling fan corresponding to the vehicle speed, engine coolant temperature, refrigerant pressure, and air conditioner ON signal. The control system has 3-step control [HIGH/LOW/OFF] (Models with A/C) or 2-step control [ON/OFF] (Models without A/C).

Cooling Fan Operation

Models with A/C

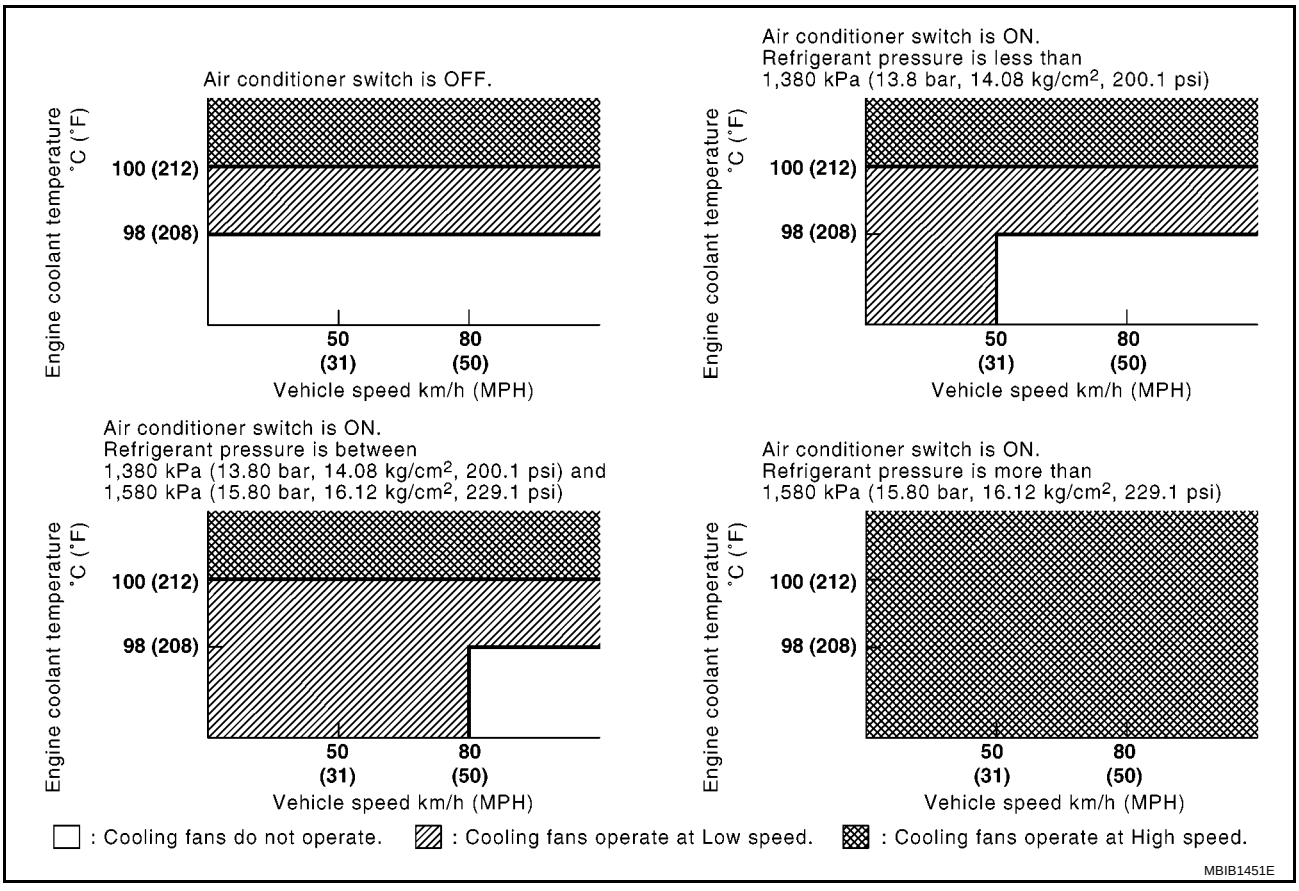

Models without A/C

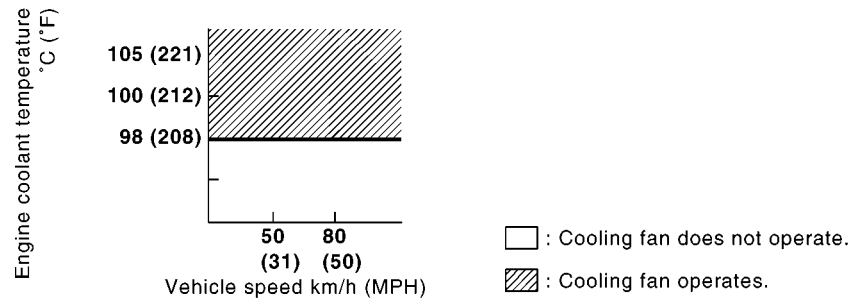

MBIB1393E

Cooling Fan Relay Operation

The ECM controls cooling fan relays in the IPDM E/R through CAN communication line.

Cooling fan speed	Cooling fan relay	
	LO	HI
Stop (OFF)	OFF	OFF
Low (LOW)	ON	OFF
High (HI)	OFF	ON

CONSULT-II Reference Value in Data Monitor Mode

BBS004UW

Specification data are reference values.

MONITOR ITEM	CONDITION		SPECIFICATION
AIR COND SIG	● Engine: After warming up, idle the engine	Air conditioner switch: OFF	OFF
		Air conditioner switch: ON (Compressor operates.)	ON
COOLING FAN	● Engine: After warming up, idle the engine ● Air conditioner switch: OFF	Engine coolant temperature is 97°C (207°F) or less	OFF
		Engine coolant temperature is between 98°C (208°F) and 99°C (210°F) or more	LOW*
		Engine coolant temperature is 100°C (212°F) or more	HIGH*

*: Models without air conditioner, cooling fan operates only ON and OFF operation, but CONSULT-II display will change OFF, LOW and HI depends on engine coolant temperature.

On Board Diagnosis Logic

BBS004UX

If the cooling fan or another component in the cooling system malfunctions, engine coolant temperature will rise. When the engine coolant temperature reaches an abnormally high temperature condition, a malfunction is indicated.

This self-diagnosis has the one trip detection logic.

DTC No.	Trouble diagnosis name	DTC detecting condition	Possible cause
P1217 1217	Engine over temperature (Overheat)	● Cooling fan does not operate properly (Overheat). ● Cooling fan system does not operate properly (Overheat). ● Engine coolant was not added to the system using the proper filling method. ● Engine coolant is not within the specified range.	● Harness or connectors (The cooling fan circuit is open or shorted.) ● Cooling fan ● IPDM E/R (Cooling fan relays) ● Radiator hose ● Radiator ● Reservoir tank (M/T models with A/C) ● Reservoir tank cap (M/T models with A/C) ● Radiator cap (M/T models without A/C and A/T models) ● Water pump ● Thermostat For more information, refer to EC-1465, "Main 12 Causes of Overheating" .

CAUTION:
When a malfunction is indicated, be sure to replace the coolant. Refer to MA-39, "Changing Engine Coolant" . Also, replace the engine oil. Refer to MA-45, "Changing Engine Oil" .

1. **Fill radiator with coolant up to specified level with a filling speed of 2 liters per minute. Be sure to use coolant with the proper mixture ratio. Refer to MA-26, "Engine Coolant Mixture Ratio" .**
2. **After refilling coolant, run engine to ensure that no water-flow noise is emitted.**

Overall Function Check

BBS004UY

Use this procedure to check the overall function of the cooling fan. During this check, a DTC might not be confirmed.

WARNING:
Never remove the reservoir tank cap (M/T models with A/C) or the radiator cap (M/T models without A/C and A/T models) when the engine is hot. Serious burns could be caused by high pressure fluid escaping from the reservoir tank or the radiator.
Wrap a thick cloth around cap. Carefully remove the cap by turning it a quarter turn to allow built-up pressure to escape. Then turn the cap all the way off.

WITH CONSULT-II

1. Check the coolant level in the reservoir tank and radiator.
   Allow engine to cool before checking coolant level.
   If the coolant level in the reservoir tank and/or radiator is below the proper range, skip the following steps and go to EC-1458, "PROCEDURE FOR MODELS WITH AIR CONDITIONER" or EC-1462, "PROCEDURE FOR MODELS WITHOUT AIR CONDITIONER" .
2. Confirm whether customer filled the coolant or not. If customer filled the coolant, skip the following steps and go to EC-1458, "PROCEDURE FOR MODELS WITH AIR CONDITIONER" or EC-1462, "PROCEDURE FOR MODELS WITHOUT AIR CONDITIONER" .
3. Turn ignition switch ON.

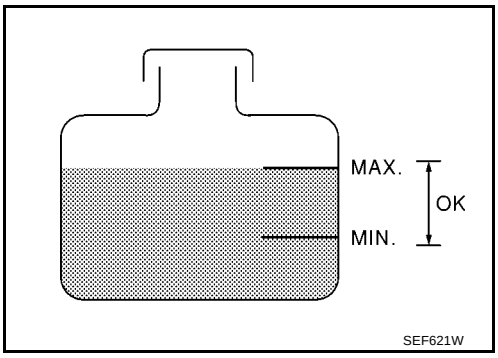

4. Perform “COOLING FAN” in “ACTIVE TEST” mode with CONSULT-II.
5. If the results are NG, go to EC-1458, "PROCEDURE FOR MODELS WITH AIR CONDITIONER" or EC-1462, "PROCEDURE FOR MODELS WITHOUT AIR CONDITIONER" .

ACTIVE TEST	
COOLING FAN	OFF
MONITOR	
COOLAN TEMP/S	XXX °C

SEF646X

WITH GST

Models with Air Conditioner

1. Check the coolant level in the reservoir tank and radiator.
   Allow engine to cool before checking coolant level.
   If the coolant level in the reservoir tank and/or radiator is below the proper range, skip the following steps and go to EC-1458, "PROCEDURE FOR MODELS WITH AIR CONDITIONER" .
2. Confirm whether customer filled the coolant or not. If customer filled the coolant, skip the following steps and go to EC-1458, "PROCEDURE FOR MODELS WITH AIR CONDITIONER" .
3. Start engine.
   CAUTION:
   Be careful not to overheat engine.
4. Set temperature control switch to full cold position.
5. Turn air conditioner switch ON.
6. Turn blower fan switch ON.
7. Run engine at idle for a few minutes with air conditioner operating.
   CAUTION:
   Be careful not to overheat engine.
8. Make sure that cooling fans operates at low speed.
   If NG, go to EC-1458, "PROCEDURE FOR MODELS WITH AIR CONDITIONER" .
   If OK, go to the following step.
9. Turn ignition switch OFF.
10. Turn air conditioner switch and blower fan switch OFF.
11. Disconnect engine coolant temperature sensor harness connector.
12. Connect 150Ω resistor to engine coolant temperature sensor harness connector.

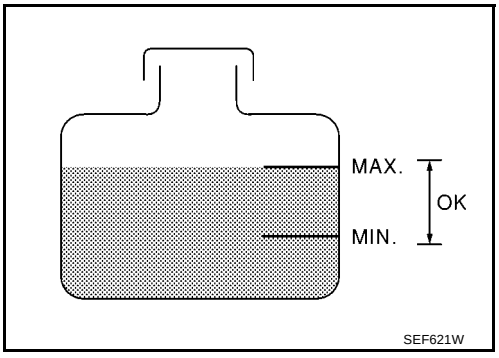

SEF621W

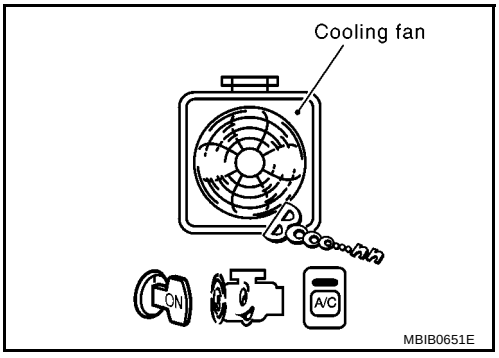

MBIB0651E

13. Restart engine and make sure that cooling fan operates at higher speed than low speed.
    CAUTION:
    Be careful not to overheat engine.
14. If NG, go to EC-1458, "PROCEDURE FOR MODELS WITH AIR CONDITIONER" .

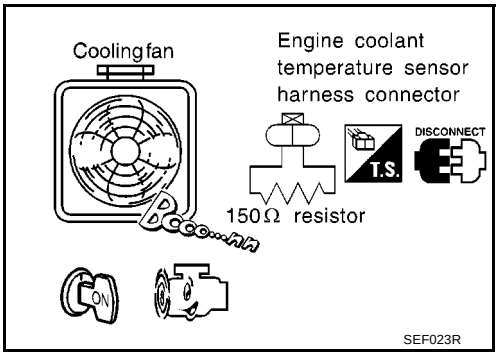

SEF023R

Models without Air Conditioner

1. Check the coolant level in the reservoir tank and radiator.
   Allow engine to cool before checking coolant level.
   If the coolant level in the reservoir tank and/or radiator is below the proper range, skip the following steps and go to EC-1462, "PROCEDURE FOR MODELS WITHOUT AIR CONDITIONER".
2. Confirm whether customer filled the coolant or not. If customer filled the coolant, skip the following steps and go to EC-1462, "PROCEDURE FOR MODELS WITHOUT AIR CONDITIONER".
3. Disconnect engine coolant temperature sensor harness connector.

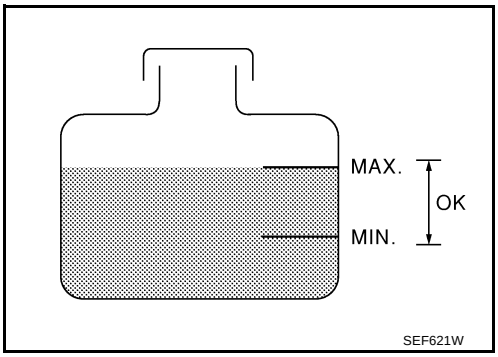

4. Connect 150Ω resistor to engine coolant temperature sensor harness connector.
5. Start engine and make that cooling fan operates. Be careful not to overheat engine.
6. If NG, go to EC-1462, "PROCEDURE FOR MODELS WITHOUT AIR CONDITIONER".

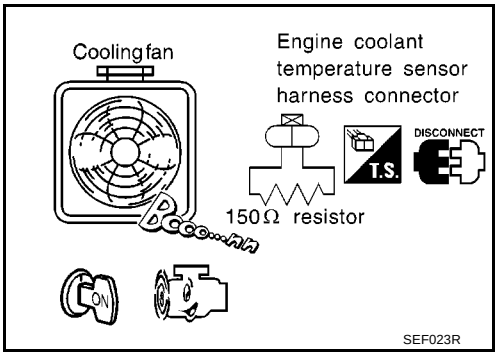

Wiring Diagram

BBS004UZ

MODELS WITH AIR CONDITIONER

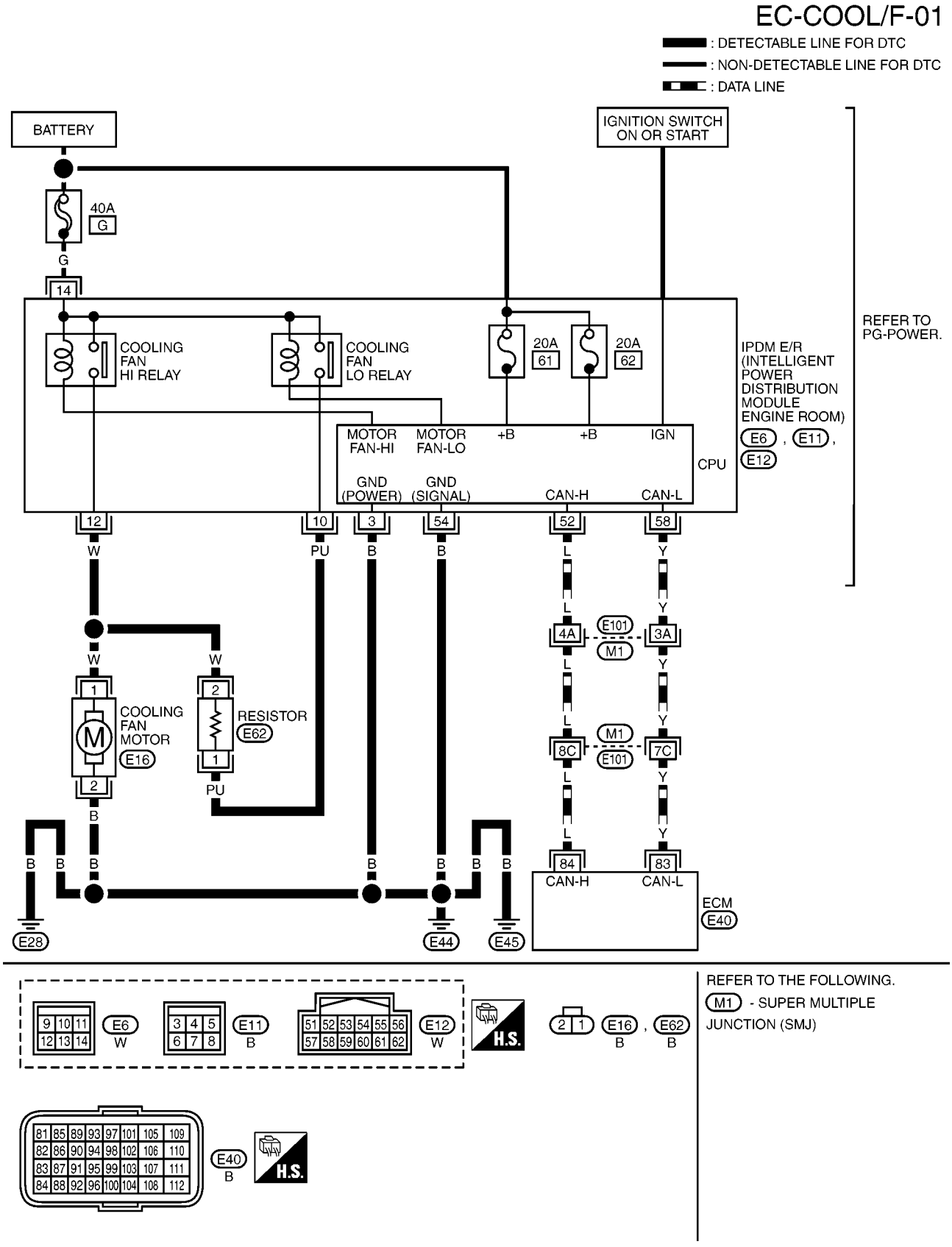

MODELS WITHOUT AIR CONDITIONER

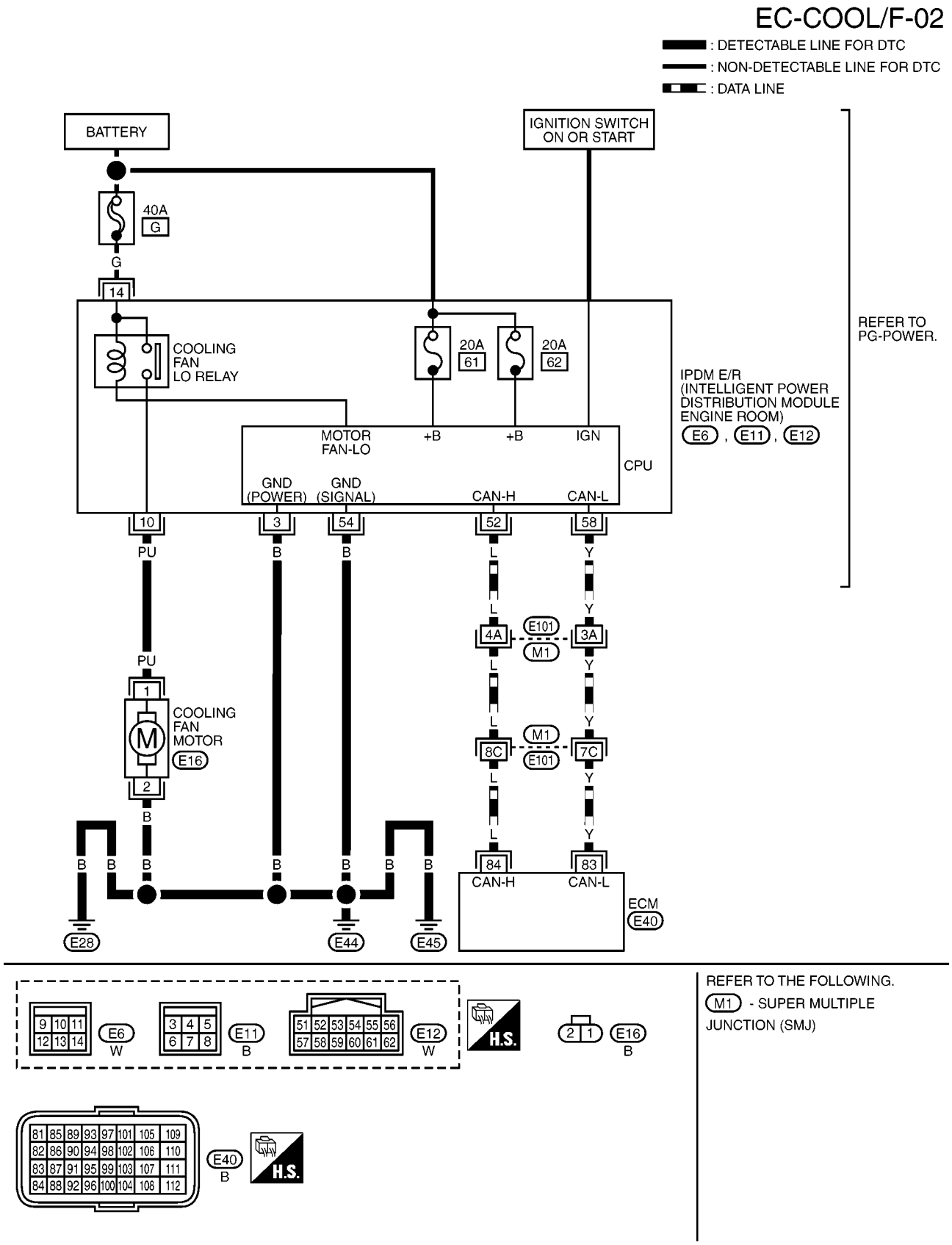

MBWA1476E

Diagnostic Procedure

BBS004V0

PROCEDURE FOR MODELS WITH AIR CONDITIONER

1. INSPECTION START

Do you have CONSULT-II?

Yes or No

Yes >> GO TO 2.
No >> GO TO 4.

2. CHECK COOLING FAN LOW SPEED OPERATION

With CONSULT-II

1. Turn ignition switch ON.
2. Perform “COOLING FAN” in “ACTIVE TEST” mode with CONSULT-II and touch “LOW” on the CONSULT-II screen.
3. Make sure that cooling fan operates at low speed.

OK or NG

OK >> GO TO 3.
NG >> Check cooling fan control circuit. (Go to EC-1460, "PROCEDURE A" .)

ACTIVE TEST	
COOLING FAN	LOW
MONITOR	
COOLAN TEMP/S	XXX °C

SEF784Z

3. CHECK COOLING FAN HIGH SPEED OPERATION

With CONSULT-II

1. Touch “HIGH” on the CONSULT-II screen.
2. Make sure that cooling fan operates at higher speed than low speed.

OK or NG

OK >> GO TO 6.
NG >> Check cooling fan control circuit. (Go to EC-1460, "PROCEDURE A" .)

ACTIVE TEST	
COOLING FAN	HIGH
MONITOR	
COOLAN TEMP/S	XXX °C

SEF785Z

4. CHECK COOLING FAN LOW SPEED OPERATION

Without CONSULT-II

1. Start engine and let it idle.
2. Turn air conditioner switch ON.
3. Turn blower fan switch ON.
4. Make sure that cooling fan operates at low speed.

OK or NG

OK >> GO TO 5.
NG >> Check cooling fan low speed control circuit. (Go to EC-1460, "PROCEDURE A" .)

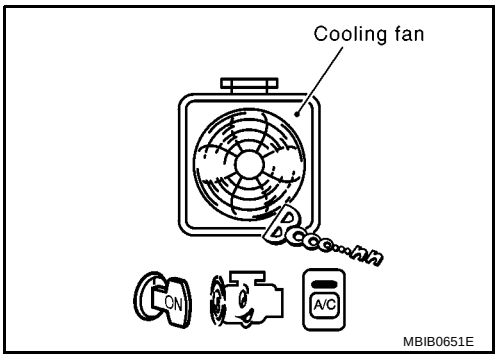

5. CHECK COOLING FAN HIGH SPEED OPERATION

Without CONSULT-II

1. Turn ignition switch OFF.
2. Turn air conditioner switch and blower fan switch OFF.
3. Disconnect engine coolant temperature sensor harness connector.
4. Connect 150Ω resistor to engine coolant temperature sensor harness connector.
5. Restart engine and make sure that cooling fan operates at higher speed than low speed.

OK or NG

OK >> GO TO 6.
NG >> Check cooling fan high speed control circuit. (Go to EC-1460, "PROCEDURE A" .)

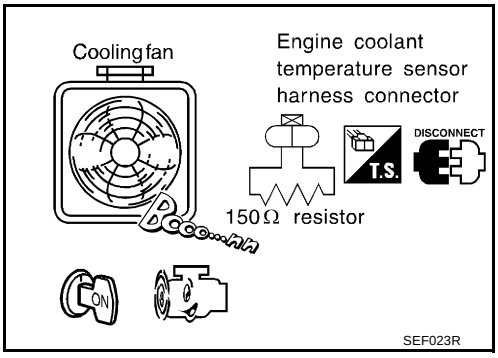

6. CHECK COOLING SYSTEM FOR LEAK

Refer to CO-27, "ENGINE COOLANT" .

OK or NG

OK >> GO TO 8.
NG >> GO TO 7.

7. DETECT MALFUNCTIONING PART

Check the following for leak.

- Hose
- Radiator
- Water pump (Refer to CO-36, "WATER PUMP" .)
- Reservoir tank

>> Repair or replace.

8. CHECK RESERVOIR TANK CAP (M/T MODELS) OR RADIATOR CAP (A/T MODELS)

Refer to CO-35, "Checking Reservoir Tank Cap (M/T with A/C Models)" or CO-34, "Checking Radiator Cap (All Models Except M/T with A/C)" .

OK or NG

OK >> GO TO 9.
NG >> Replace reservoir tank cap (M/T models) or radiator cap (A/T models).

9. CHECK THERMOSTAT

Refer to CO-38, "THERMOSTAT" .

OK or NG

OK >> GO TO 10.
NG >> Replace thermostat.

10. CHECK ENGINE COOLANT TEMPERATURE SENSOR

Refer to EC-1365, "Component Inspection" .

OK or NG

OK >> GO TO 11.
NG >> Replace engine coolant temperature sensor.

11. CHECK MAIN 12 CAUSES

If the cause cannot be isolated, go to EC-1465, "Main 12 Causes of Overheating" .

>> **INSPECTION END**

PROCEDURE A

1. CHECK POWER SUPPLY CIRCUIT

1. Turn ignition switch OFF.
2. Disconnect IPDM E/R harness connector E6.
3. Check voltage between IPDM E/R terminal 14 and ground with CONSULT-II or tester.

Voltage: Battery voltage

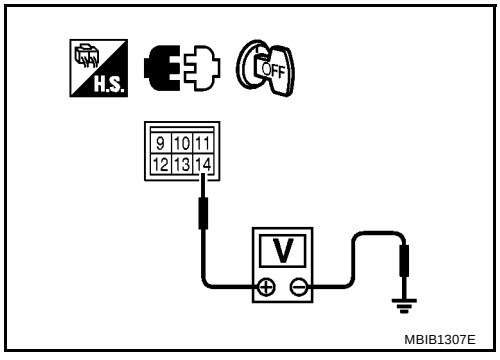

OK or NG

OK >> GO TO 3.
NG >> GO TO 2.

2. DETECT MALFUNCTIONING PART

Check the following.

- 40A fusible link
- Harness for open or short between IPDM E/R and battery

>> Repair open circuit or short to ground or short to power in harness or connectors.

3. CHECK COOLING FAN MOTOR CIRCUIT

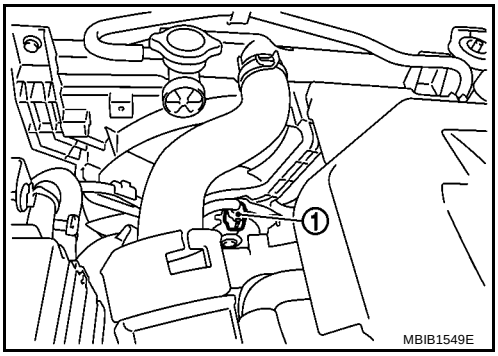

1. Disconnect cooling fan motor harness connector (1).
- ⇦: Vehicle front
2. Disconnect IPDM E/R harness connectors E11 and E12.
3. Check harness continuity between cooling fan motor terminal 1 and IPDM E/R terminal 10, cooling fan motor terminal 2 and ground.
Refer to wiring diagram.

Continuity should exist.

4. Also check harness for short to ground and short to power.
5. Check harness continuity between IPDM E/R terminal 12 and cooling fan motor terminal 1.
Refer to wiring diagram.

Continuity should exist.

6. Also check harness for short to ground and short to power.
7. Check harness continuity between IPDM E/R terminals 3, 53 and ground.
Refer to Wiring Diagram.

Continuity should exist.

8. Also check harness for short to ground and short to power.

OK or NG

OK >> GO TO 5.
NG >> GO TO 4.

4. DETECT MALFUNCTIONING PART

Check the following.

- Harness for open or short between cooling fan motor and IPDM E/R
- Harness for open or short between cooling fan motor and ground
- Harness for open or short between resistor and IPDM E/R
- Harness for open or short between resistor and cooling fan motor
- Resistor E62

>> Repair open circuit or short to ground or short to power in harness or connectors.

5. CHECK COOLING FAN MOTOR

Refer to EC-1466, "Component Inspection" .

OK or NG

OK >> GO TO 6.
NG >> Replace cooling fan motor.

6. CHECK INTERMITTENT INCIDENT

Perform EC-1336, "TROUBLE DIAGNOSIS FOR INTERMITTENT INCIDENT" .

OK or NG

OK >> Replace IPDM E/R. Refer to PG-18, "IPDM E/R (INTELLIGENT POWER DISTRIBUTION MODULE ENGINE ROOM)" .
NG >> Repair or replace harness or connector.

PROCEDURE FOR MODELS WITHOUT AIR CONDITIONER

1. INSPECTION START

Do you have CONSULT-II?

Yes or No

Yes >> GO TO 2.
No >> GO TO 3.

2. CHECK COOLING FAN OPERATION

With CONSULT-II

1. Turn ignition switch ON.
2. Perform “COOLING FAN” in “ACTIVE TEST” mode with CONSULT-II and touch “LOW” on the CONSULT-II screen.
3. Make sure that cooling fan operates.

OK or NG

OK >> GO TO4.
NG >> Check cooling fan control circuit. (Go to EC-1463, "PROCEDURE B" .)

ACTIVE TEST	
COOLING FAN	LOW
MONITOR	
COOLAN TEMP/S	XXX °C

SEF784Z

3. CHECK COOLING FAN OPERATION

Without CONSULT-II

1. Turn ignition switch OFF.
2. Disconnect engine coolant temperature sensor harness connector.
3. Connect 150Ω resistor to engine coolant temperature sensor harness connector.
4. Restart engine and make sure that cooling fan operates.

OK or NG

OK >> GO TO 4.
NG >> Check cooling fan speed control circuit. (Go to EC-1463, "PROCEDURE B" .)

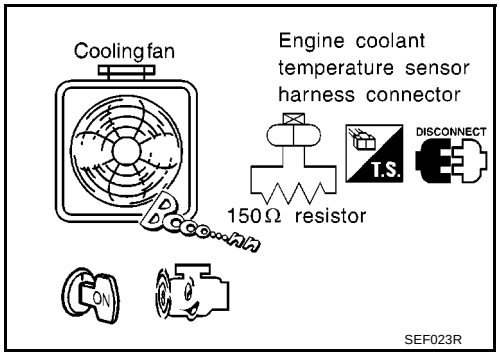

4. CHECK COOLING SYSTEM FOR LEAK

Refer to CO-27, "ENGINE COOLANT" .

OK or NG

OK >> GO TO 6.
NG >> GO TO 5.

5. DETECT MALFUNCTIONING PART

Check the following for leak.

- Hose
- Radiator
- Water pump (Refer to CO-36, "WATER PUMP" .)

>> Repair or replace.

6. CHECK RADIATOR CAP

Refer to CO-34, "Checking Radiator Cap (All Models Except M/T with A/C)" .

OK or NG

OK >> GO TO 7.
NG >> Replace radiator cap.

7. CHECK THERMOSTAT

Refer to CO-38, "THERMOSTAT" .

OK or NG

OK >> GO TO 8.
NG >> Replace thermostat.

8. CHECK ENGINE COOLANT TEMPERATURE SENSOR

Refer to EC-1365, "Component Inspection" .

OK or NG

OK >> GO TO 9.
NG >> Replace engine coolant temperature sensor.

9. CHECK MAIN 12 CAUSES

If the cause cannot be isolated, go to EC-1465, "Main 12 Causes of Overheating" .

>> **INSPECTION END**

PROCEDURE B

1. CHECK POWER SUPPLY CIRCUIT

1. Turn ignition switch OFF.
2. Disconnect IPDM E/R harness connector E6.
3. Check voltage between IPDM E/R terminal 14 and ground with CONSULT-II or tester.

Voltage: Battery voltage

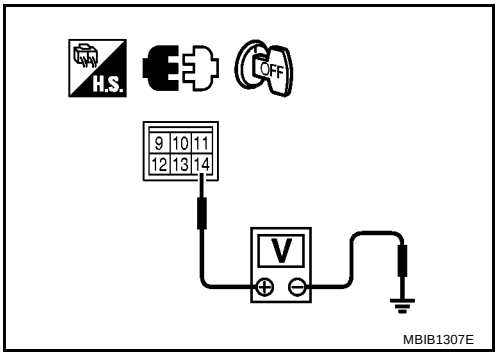

OK or NG

OK >> GO TO 3.
NG >> GO TO 2.

2. DETECT MALFUNCTIONING PART

Check the following.

- 40A fusible link
- Harness for open or short between IPDM E/R and battery

>> Repair open circuit or short to ground or short to power in harness or connectors.

3. CHECK COOLING FAN MOTORS CIRCUIT

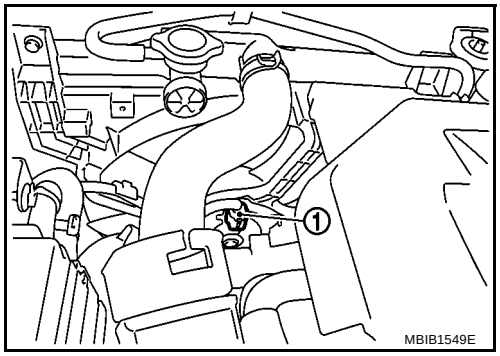

1. Disconnect cooling fan motor harness connector (1).

– ⇦: Vehicle front

2. Disconnect IPDM E/R harness connectors E11 and E12.
3. Check harness continuity between cooling fan motor terminal 1 and IPDM E/R terminal 10, cooling fan motor terminal 2 and ground.
   Refer to wiring diagram.

   Continuity should exist.

4. Also check harness for short to ground and short to power.
5. Check harness continuity between IPDM E/R terminals 3, 53 and ground.
   Refer to Wiring Diagram.

   Continuity should exist.

6. Also check harness for short to ground and short to power.

OK or NG

OK >> GO TO 5.
NG >> GO TO 4.

4. DETECT MALFUNCTIONING PART

Check the following.

- Harness for open or short between cooling fan motor and IPDM E/R
- Harness for open or short between cooling fan motor and ground

>> Repair open circuit or short to ground or short to power in harness or connectors.

5. CHECK COOLING FAN MOTOR

Refer to EC-1466, "Component Inspection" .

OK or NG

OK >> GO TO 6.
NG >> Replace cooling fan motor.

6. CHECK INTERMITTENT INCIDENT

Perform EC-1336, "TROUBLE DIAGNOSIS FOR INTERMITTENT INCIDENT" .

OK or NG

OK >> Replace IPDM E/R. Refer to PG-18, "IPDM E/R (INTELLIGENT POWER DISTRIBUTION MODULE ENGINE ROOM)" .
NG >> Repair or replace harness or connector.

Main 12 Causes of Overheating

BBS004V1

Engine	Step	Inspection item	Equipment	Standard	Reference page
OFF	1	● Blocked radiator ● Blocked condenser ● Blocked radiator grille ● Blocked bumper	● Visual	No blocking	—
	2	● Coolant mixture	● Coolant tester	50 - 50% coolant mixture	See MA-26, "Engine Coolant Mixture Ratio" .
	3	● Coolant level	● Visual	Coolant up to MAX level in reservoir tank and radiator filler neck	See CO-27, "LEVEL CHECK" .
	4*5	● Radiator cap	● Pressure tester	59 - 98 kPa (0.59 - 0.98 bar, 0.6 - 1.0 kg/cm^2 , 9 - 14 psi) (Limit)	See CO-34, "Checking Radiator Cap (All Models Except M/T with A/C)" .
	4*6	● Reservoir tank cap	● Pressure tester	88 kPa (0.88 bar, 0.90 kg/cm^2 , 12.8psi)	See CO-35, "Checking Reservoir Tank Cap (M/T with A/C Models)" .
ON*2	5	● Coolant leaks	● Visual	No leaks	See CO-27, "LEAK CHECK" .
ON*2	6	● Thermostat	● Touch the upper and lower radiator hoses	Both hoses should be hot	See CO-38, "THERMOSTAT" , and CO-31, "RADIATOR" .
ON*1	7	● Cooling fan	● CONSULT-II	Operating	See trouble diagnosis for DTC P1217 (EC-1458, "Diagnostic Procedure").
OFF	8	● Combustion gas leak	● Color checker chemical tester 4 Gas analyzer	Negative	—
ON*3	9	● Coolant temperature gauge	● Visual	Gauge less than 3/4 when driving	—
		● Coolant overflow to reservoir tank	● Visual	No overflow during driving and idling	See MA-39, "Changing Engine Coolant" .
OFF*4	10	● Coolant return from reservoir tank to radiator	● Visual	Should be initial level in reservoir tank	See CO-27, "LEVEL CHECK" .
OFF	11	● Cylinder head	● Straight gauge feeler gauge	0.1 mm (0.004 in) Maximum distortion (warping)	See EM-173, "CYLINDER HEAD" .
	12	● Cylinder block and pistons	● Visual	No scuffing on cylinder walls or piston	See EM-189, "CYLINDER BLOCK" .

*1: Turn the ignition switch ON.
*2: Engine running at 3,000 rpm for 10 minutes.
*3: Drive at 90 km/h (55 MPH) for 30 minutes and then let idle for 10 minutes.
*4: After 60 minutes of cool down time.
*5: M/T models without A/C and A/T models.
*6: M/T models with A/C.
For more information, refer to CO-24, "OVERHEATING CAUSE ANALYSIS" .

Component Inspection

BBS004V2

COOLING FAN MOTOR

1. Disconnect cooling fan motor harness connectors.
2. Supply cooling fan motor terminals with battery voltage and check operation.

	Terminals	
	(+)	(-)
Cooling fan motor	1	2

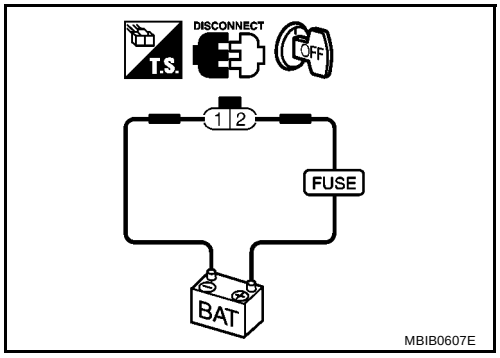

DTC P1225 TP SENSOR

PFP:16119

Component Description

BBS004PO

Electric throttle control actuator consists of throttle control motor, throttle position sensor, etc. The throttle position sensor responds to the throttle valve movement.
The throttle position sensor has the two sensors. These sensors are a kind of potentiometers which transform the throttle valve position into output voltage, and emit the voltage signal to the ECM. In addition, these sensors detect the opening and closing speed of the throttle valve and feed the voltage signals to the ECM. The ECM judges the current opening angle of the throttle valve from these signals and the ECM controls the throttle control motor to make the throttle valve opening angle properly in response to driving condition.

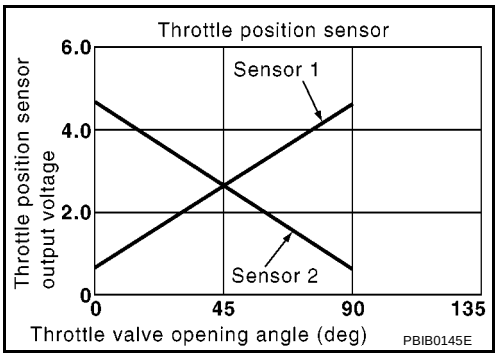

On Board Diagnosis Logic

BBS004PP

The MI will not light up for this diagnosis.

DTC No.	Trouble diagnosis name	DTC detecting condition	Possible cause
P1225 1225	Closed throttle position learning performance	Closed throttle position learning value is excessively low.	● Electric throttle control actuator (TP sensor 1 and 2)

DTC Confirmation Procedure

BBS004PQ

NOTE:
If DTC Confirmation Procedure has been previously conducted, always turn ignition switch OFF and wait at least 10 seconds before conducting the next test.
TESTING CONDITION:
Before performing the following procedure, confirm that battery voltage is more than 10V at idle.

WITH CONSULT-II

1. Turn ignition switch ON.
2. Select “DATA MONITOR” mode with CONSULT-II.
3. Turn ignition switch OFF and wait at least 10 seconds.
4. Turn ignition switch ON.
5. If 1st trip DTC is detected, go to EC-1468, "Diagnostic Procedure" .

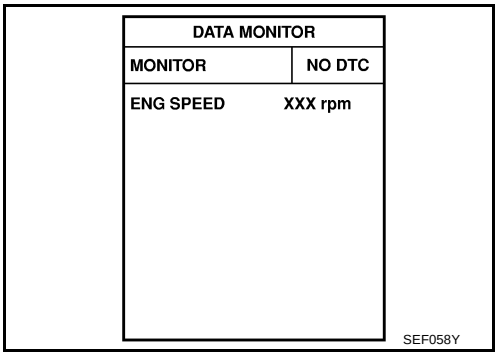

WITHOUT CONSULT-II

1. Turn ignition switch ON.
2. Turn ignition switch OFF, wait at least 10 seconds and then turn ON.
3. Perform Diagnostic Test Mode II (Self-diagnostic results) with ECM.
4. If 1st trip DTC is detected, go to EC-1468, "Diagnostic Procedure" .

Diagnostic Procedure

BBS004PR

1. CHECK ELECTRIC THROTTLE CONTROL ACTUATOR VISUALLY

1. Turn ignition switch OFF.
2. Remove the intake air duct.
3. Check if foreign matter is caught between the throttle valve (1) and the housing.

– ⇦: Vehicle front
– Illustration shows the view with intake air duct removed.

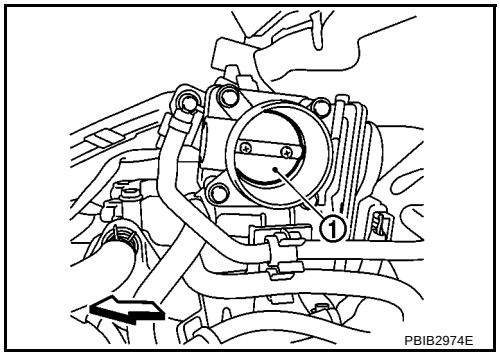

OK or NG

OK >> GO TO 2.
NG >> Remove the foreign matter and clean the electric throttle control actuator inside.

2. REPLACE ELECTRIC THROTTLE CONTROL ACTUATOR

1. Replace the electric throttle control actuator.
2. Perform EC-1279, "Throttle Valve Closed Position Learning" .
3. Perform EC-1279, "Idle Air Volume Learning" .

>> **INSPECTION END**

Removal and Installation

BBS004PS

ELECTRIC THROTTLE CONTROL ACTUATOR

Refer to EM-120, "INTAKE MANIFOLD" .

DTC P1226 TP SENSOR

PFP:16119

Component Description

BBS004PT

Electric throttle control actuator consists of throttle control motor, throttle position sensor, etc. The throttle position sensor responds to the throttle valve movement.
The throttle position sensor has the two sensors. These sensors are a kind of potentiometers which transform the throttle valve position into output voltage, and emit the voltage signal to the ECM. In addition, these sensors detect the opening and closing speed of the throttle valve and feed the voltage signals to the ECM. The ECM judges the current opening angle of the throttle valve from these signals and the ECM controls the throttle control motor to make the throttle valve opening angle properly in response to driving condition.

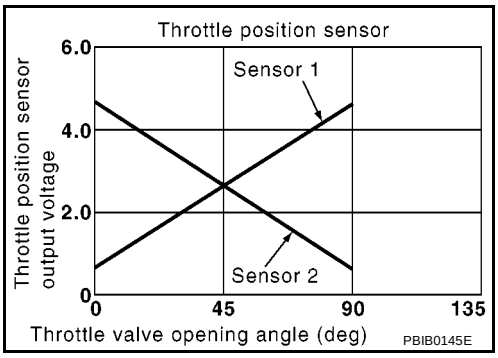

On Board Diagnosis Logic

BBS004PU

The MI will not light up for this diagnosis.

DTC No.	Trouble diagnosis name	DTC detecting condition	Possible cause
P1226 1226	Closed throttle position learning performance	Closed throttle position learning is not performed successfully, repeatedly.	● Electric throttle control actuator (TP sensor 1 and 2)

DTC Confirmation Procedure

BBS004PV

NOTE:
If DTC Confirmation Procedure has been previously conducted, always turn ignition switch OFF and wait at least 10 seconds before conducting the next test.
TESTING CONDITION:
Before performing the following procedure, confirm that battery voltage is more than 10V at idle.

WITH CONSULT-II

1. Turn ignition switch ON.
2. Select “DATA MONITOR” mode with CONSULT-II.
3. Turn ignition switch OFF and wait at least 10 seconds.
4. Turn ignition switch ON.
5. Repeat step 3 and 4 for 32 times.
6. If 1st trip DTC is detected, go to EC-1470, "Diagnostic Procedure" .

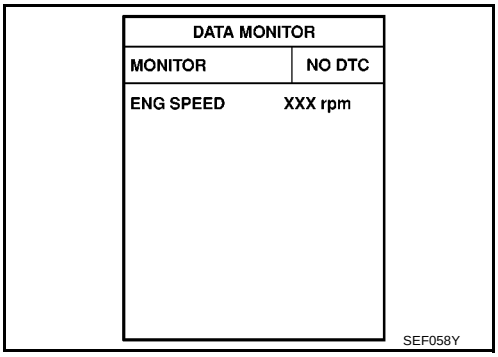

WITHOUT CONSULT-II

1. Turn ignition switch ON.
2. Turn ignition switch OFF, wait at least 10 seconds and then turn ON.
3. Repeat step 2 for 32 times.
4. Perform Diagnostic Test Mode II (Self-diagnostic results) with ECM.
5. If 1st trip DTC is detected, go to EC-1470, "Diagnostic Procedure" .

Diagnostic Procedure

BBS004PW

1. CHECK ELECTRIC THROTTLE CONTROL ACTUATOR VISUALLY

1. Turn ignition switch OFF.
2. Remove the intake air duct.
3. Check if foreign matter is caught between the throttle valve (1) and the housing.

– ⇦: Vehicle front
– Illustration shows the view with intake air duct removed.

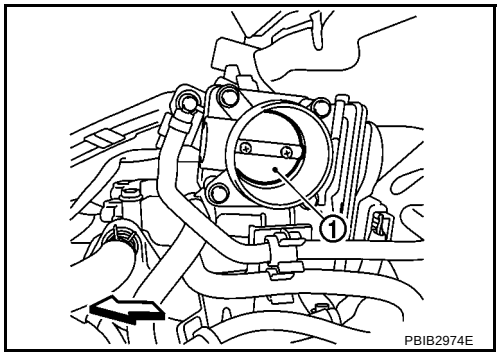

OK or NG

OK >> GO TO 2.
NG >> Remove the foreign matter and clean the electric throttle control actuator inside.

2. REPLACE ELECTRIC THROTTLE CONTROL ACTUATOR

1. Replace the electric throttle control actuator.
2. Perform EC-1279, "Throttle Valve Closed Position Learning" .
3. Perform EC-1279, "Idle Air Volume Learning" .

>> **INSPECTION END**

Removal and Installation

BBS004PX

ELECTRIC THROTTLE CONTROL ACTUATOR

Refer to EM-120, "INTAKE MANIFOLD" .

DTC P1229 SENSOR POWER SUPPLY

PFP:16119

On Board Diagnosis Logic

BBS004PY

This self-diagnosis has the one trip detection logic.

DTC No.	Trouble diagnosis name	DTC detecting condition	Possible cause
P1229 1229	Sensor power supply circuit short	ECM detects a voltage of power source for sensor is excessively low or high.	● Harness or connectors (APP sensor 1 circuit is shorted.) (Throttle position sensor circuit is shorted.) [Camshaft position sensor (PHASE) circuit is shorted.] ● Accelerator pedal position sensor ● Throttle position sensor ● Camshaft position sensor (PHASE)

FAIL-SAFE MODE

When the malfunction is detected, ECM enters fail-safe mode and the MI lights up.

Engine operation condition in fail-safe mode
ECM stops the electric throttle control actuator control, throttle valve is maintained at a fixed opening (approx. 5 degrees) by the return spring.

DTC Confirmation Procedure

BBS004PZ

NOTE:
If DTC Confirmation Procedure has been previously conducted, always turn ignition switch OFF and wait at least 10 seconds before conducting the next test.

TESTING CONDITION:
Before performing the following procedure, confirm that battery voltage is more than 10V at idle.

WITH CONSULT-II

1. Turn ignition switch ON.
2. Select “DATA MONITOR” mode with CONSULT-II.
3. Start engine and let it idle for 1 second.
4. If DTC is detected, go to EC-1476, "Diagnostic Procedure" .

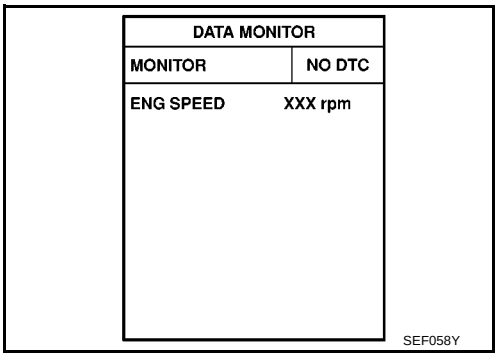

WITHOUT CONSULT-II

1. Start engine and let it idle for 1 second.
2. Turn ignition switch OFF, wait at least 10 seconds and then turn ON.
3. Perform Diagnostic Test Mode II (Self-diagnostic results) with ECM.
4. If DTC is detected, go to EC-1476, "Diagnostic Procedure" .

Wiring Diagram
LHD MODELS

BBS004Q0

EC-SEN/PW-01

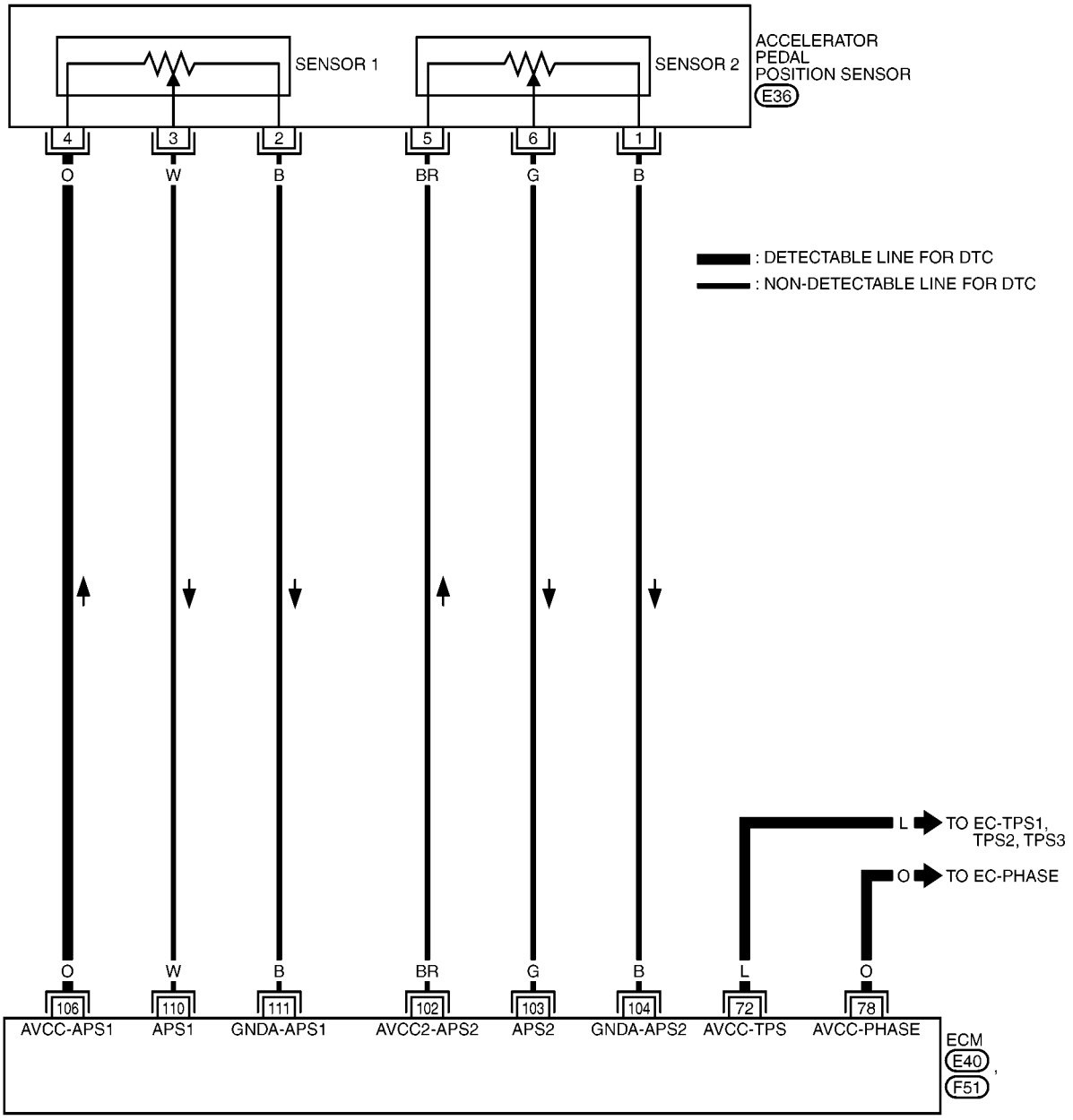

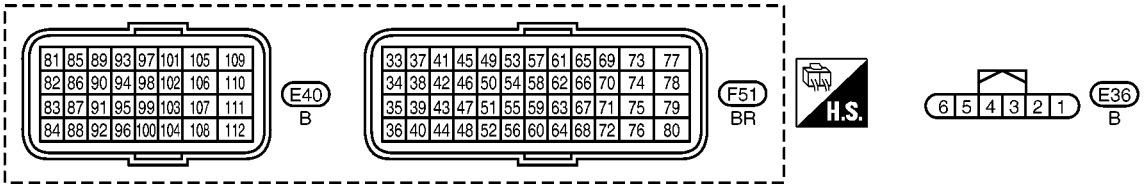

MBWA1477E

Specification data are reference values and are measured between each terminal and ground.

CAUTION:

Do not use ECM ground terminals when measuring input/output voltage. Doing so may result in damage to the ECM's transistor. Use a ground other than ECM terminals, such as the ground.

TERMINAL NO.	WIRE COLOR	ITEM	CONDITION	DATA (DC Voltage)
72	L	Sensor power supply (Throttle position sensor)	**[Ignition switch: ON]**	Approximately 5V
78	O	Sensor power supply [Camshaft position sensor (PHASE)]	**[Ignition switch: ON]**	Approximately 5V
102	BR	Sensor power supply (APP sensor 2)	**[Ignition switch: ON]**	Approximately 5V
103	G	Accelerator pedal position sensor 2	**[Ignition switch: ON]** ● Engine stopped ● Accelerator pedal: Fully released	0.3 - 0.6V
			[Ignition switch: ON] ● Engine stopped ● Accelerator pedal: Fully depressed	1.95 - 2.4V
104	B	Sensor ground (APP sensor 2)	**[Engine is running]** ● **Warm-up condition** ● Idle speed	Approximately 0V
106	O	Sensor power supply (APP sensor 1)	**[Ignition switch: ON]**	Approximately 5V
110	W	Accelerator pedal position sensor 1	**[Ignition switch: ON]** ● Engine stopped ● Accelerator pedal: Fully released	0.6 - 0.9V
			[Ignition switch: ON] ● Engine stopped ● Accelerator pedal: Fully depressed	3.9 - 4.7V
111	B	Sensor ground (APP sensor 1)	**[Engine is running]** ● **Warm-up condition** ● Idle speed	Approximately 0V

RHD MODELS

EC-SEN/PW-02

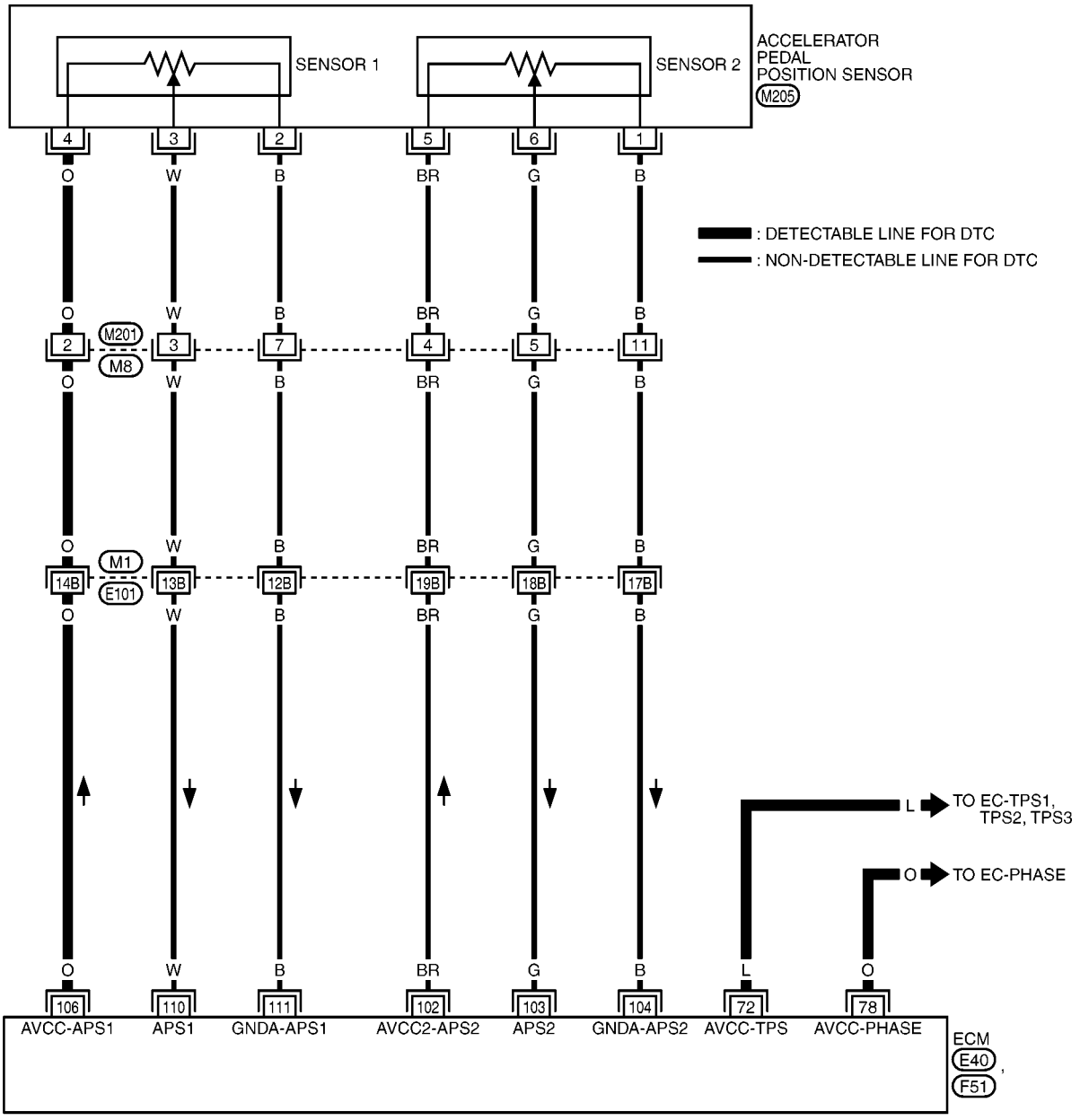

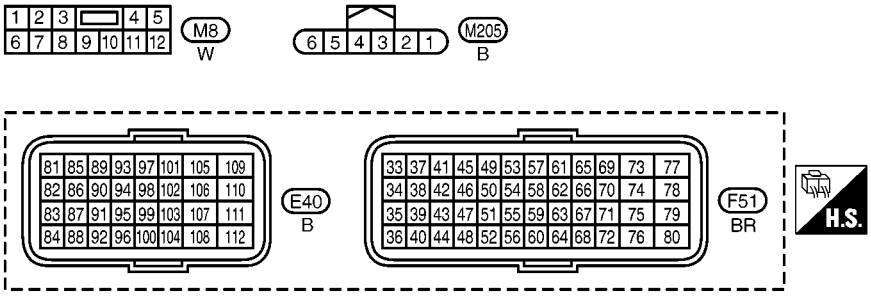

REFER TO THE FOLLOWING.
M1 - SUPER MULTIPLE JUNCTION (SMJ)

MBWA1478E

Specification data are reference values and are measured between each terminal and ground.

CAUTION:

Do not use ECM ground terminals when measuring input/output voltage. Doing so may result in damage to the ECM's transistor. Use a ground other than ECM terminals, such as the ground.

TERMINAL NO.	WIRE COLOR	ITEM	CONDITION	DATA (DC Voltage)
72	L	Sensor power supply (Throttle position sensor)	**[Ignition switch: ON]**	Approximately 5V
78	O	Sensor power supply [Camshaft position sensor (PHASE)]	**[Ignition switch: ON]**	Approximately 5V
102	BR	Sensor power supply (APP sensor 2)	**[Ignition switch: ON]**	Approximately 5V
103	G	Accelerator pedal position sensor 2	**[Ignition switch: ON]** ● Engine stopped ● Accelerator pedal: Fully released	0.3 - 0.6V
			[Ignition switch: ON] ● Engine stopped ● Accelerator pedal: Fully depressed	1.95 - 2.4V
104	B	Sensor ground (APP sensor 2)	**[Engine is running]** ● **Warm-up condition** ● Idle speed	Approximately 0V
106	O	Sensor power supply (APP sensor 1)	**[Ignition switch: ON]**	Approximately 5V
110	W	Accelerator pedal position sensor 1	**[Ignition switch: ON]** ● Engine stopped ● Accelerator pedal: Fully released	0.6 - 0.9V
			[Ignition switch: ON] ● Engine stopped ● Accelerator pedal: Fully depressed	3.9 - 4.7V
111	B	Sensor ground (APP sensor 1)	**[Engine is running]** ● **Warm-up condition** ● Idle speed	Approximately 0V

Diagnostic Procedure

BBS004Q1

1. CHECK GROUND CONNECTIONS

1. Turn ignition switch OFF.
2. Loosen and retighten ground screws on the body.
   Refer to EC-1342, "Ground Inspection" .

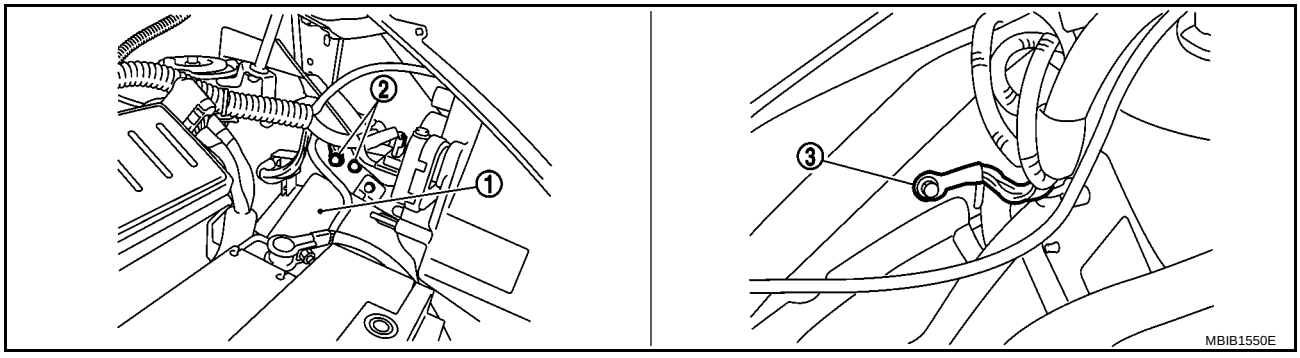

1. IPDM E/R
2. Body ground
3. Body ground

OK or NG

OK >> GO TO 2.
NG >> Repair or replace ground connections.

2. CHECK ACCELERATOR PEDAL POSITION SENSOR 1 POWER SUPPLY CIRCUIT

1. Disconnect accelerator pedal position (APP) sensor harness connector (1).
   - Accelerator pedal position sensor (2)
   - Accelerator pedal (3)
2. Turn ignition switch ON.

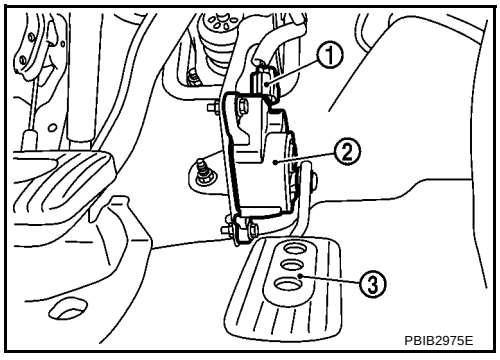

3. Check voltage between APP sensor terminal 4 and ground with CONSULT-II or tester.

   Voltage: Approximately 5V

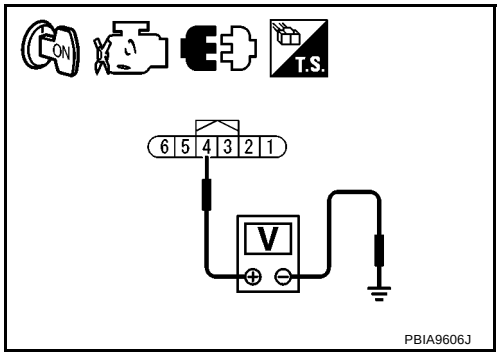

OK or NG

OK >> GO TO 7.
NG >> GO TO 3.

3. CHECK ACCELERATOR PEDAL POSITION SENSOR 1 POWER SUPPLY CIRCUIT-II

1. Turn ignition switch OFF.
2. Disconnect ECM harness connector.
3. Check harness continuity between APP sensor terminal 4 and ECM terminal 106.
   Refer to Wiring Diagram.

Continuity should exist.

OK or NG

OK >> GO TO 5.
NG >> GO TO 4.

4. DETECT MALFUNCTIONING PART

Check the following.

- Harness connectors M201, M8 (RHD models)
- Harness connectors M1, E101 (RHD models)
- Harness for open or short between APP sensor and ECM

>> Repair open circuit.

5. CHECK SENSOR POWER SUPPLY CIRCUITS

Check harness for short to power and short to ground, between the following terminals.

ECM terminal	Sensor terminal	Reference Wiring Diagram
72	Throttle position sensor terminal 1	EC-1397, "Wiring Diagram"
78	Camshaft position sensor (PHASE) terminal 1	EC-1415, "Wiring Diagram"
106	APP sensor terminal 4	EC-1494, "Wiring Diagram"

OK or NG

OK >> GO TO 6.
NG >> Repair short to ground or short to power in harness or connectors.

6. CHECK COMPONENTS

Check the following.

- Throttle position sensor (Refer to EC-1400, "Component Inspection" .)
- Camshaft position sensor (PHASE) (Refer to EC-1418, "Component Inspection" .)

OK or NG

OK >> GO TO 7.
NG >> Replace malfunctioning component.

7. CHECK APP SENSOR

Refer to EC-1206, "Component Inspection" .

OK or NG

OK >> GO TO 9.
NG >> GO TO 8.

8. REPLACE ACCELERATOR PEDAL ASSEMBLY

1. Replace accelerator pedal assembly.
2. Perform EC-1278, "Accelerator Pedal Released Position Learning" .
3. Perform EC-1279, "Throttle Valve Closed Position Learning" .
4. Perform EC-1279, "Idle Air Volume Learning" .

>> **INSPECTION END**

9. CHECK INTERMITTENT INCIDENT

Refer to EC-1336, "TROUBLE DIAGNOSIS FOR INTERMITTENT INCIDENT" .

>> **INSPECTION END**

DTC P1706 PNP SWITCH

PFP:32006

Component Description

BBS004Q2

When the shift lever position is P or N (A/T), Neutral (M/T), park/neutral position (PNP) switch is ON. ECM detects the position because the continuity of the line (the ON signal) exists.

CONSULT-II Reference Value in Data Monitor Mode

BBS004Q3

Specification data are reference values.

MONITOR ITEM	CONDITION		SPECIFICATION
P/N POSI SW	● Ignition switch: ON	Shift lever: P or N (A/T), Neutral (M/T)	ON
		Shift lever: Except above	OFF

On Board Diagnosis Logic

BBS004Q4

DTC No.	Trouble diagnosis name	DTC detecting condition	Possible cause
P1706 1706	Park/neutral position switch	The signal of the park/neutral position (PNP) switch is not changed in the process of engine starting and driving.	● Harness or connectors (PNP switch circuit is open or shorted.) ● Park/neutral position (PNP) switch

Overall Function Check

BBS004Q6

Use this procedure to check the overall function of the park/neutral position (PNP) switch circuit. During this check, a 1st trip DTC might not be confirmed.

WITH CONSULT-II

1. Turn ignition switch ON.
2. Select “P/N POSI SW” in “DATA MONITOR” mode with CONSULT-II. Then check the “P/N POSI SW” signal under the following conditions.

Position (Shift lever)	Known-good signal
N or P position (A/T) Neutral position (M/T)	ON
Except above position	OFF

If NG, go to EC-1483, "Diagnostic Procedure" .

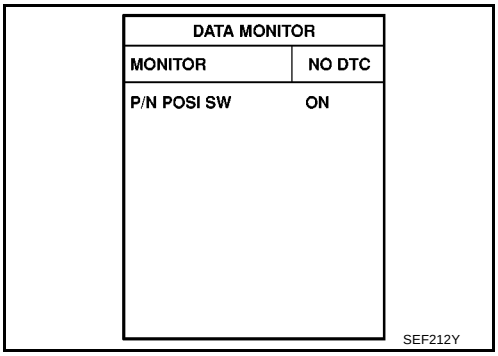

WITHOUT CONSULT-II

1. Turn ignition switch ON.
2. Check voltage between ECM terminal 70 (PNP switch signal) and ground under the following conditions.

Condition (Gear position)	Voltage (Known-good data)
P or N position (A/T) Neutral position (M/T)	Approx. 0
Except above position	BATTERY VOLTAGE (11 - 14V)

3. If NG, go to EC-1483, "Diagnostic Procedure" .

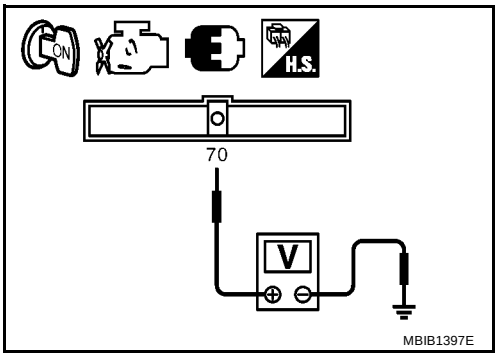

Wiring Diagram
A/T MODELS

BBS004Q7

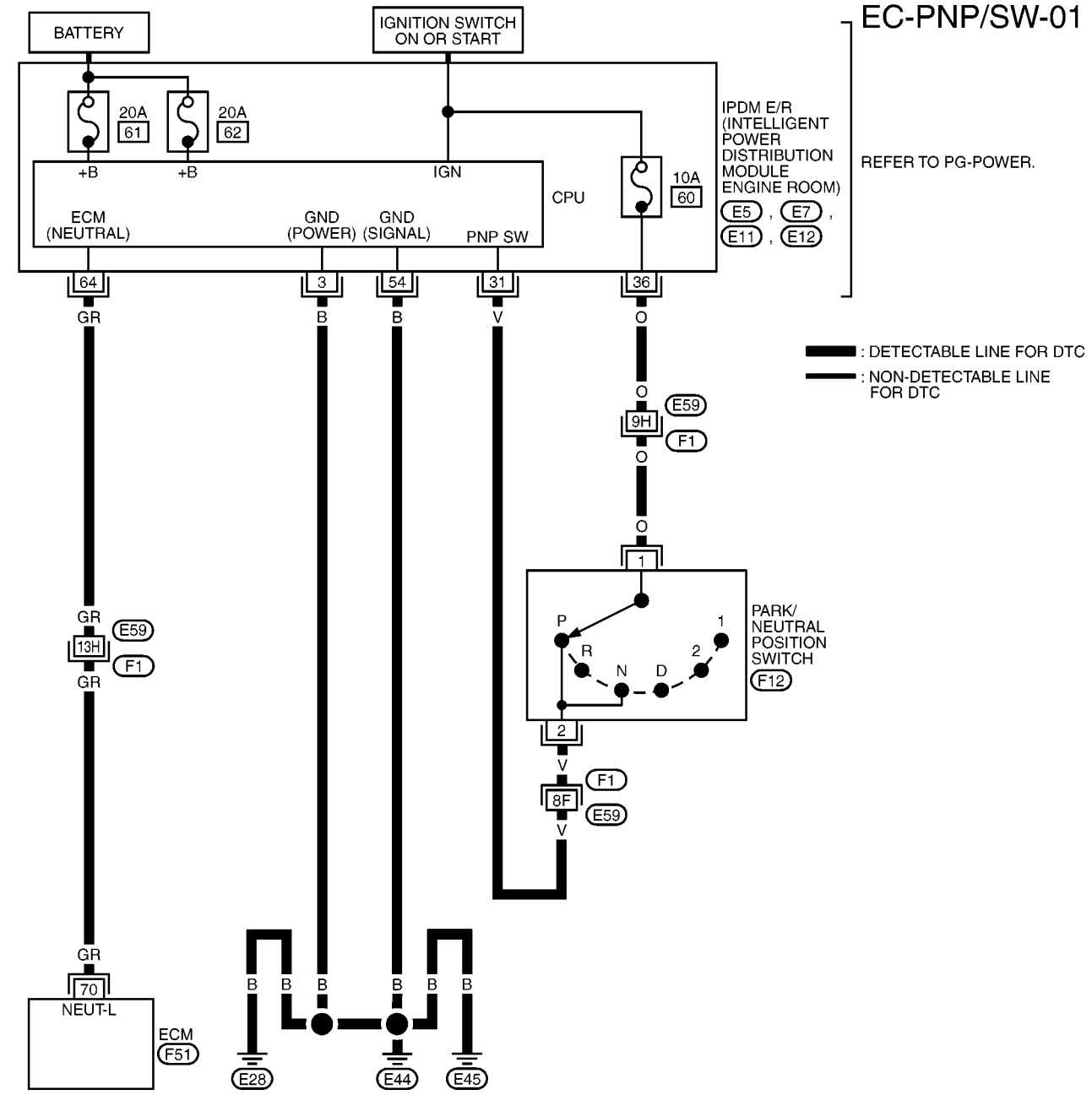

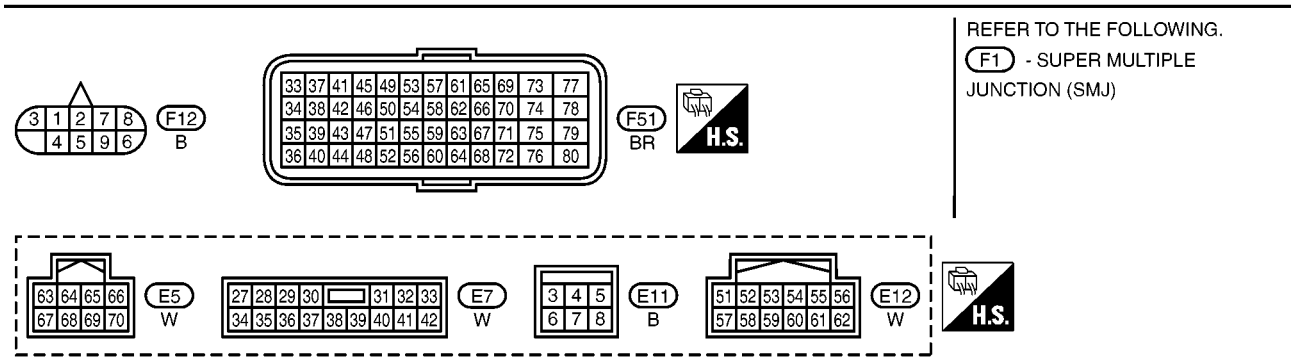

MBWA1479E

Specification data are reference values and are measured between each terminal and ground.

CAUTION:

Do not use ECM ground terminals when measuring input/output voltage. Doing so may result in damage to the ECM's transistor. Use a ground other than ECM terminals, such as the ground.

TERMINAL NO.	WIRE COLOR	ITEM	CONDITION	DATA (DC Voltage)
70	GR	Park/Neutral position (PNP) switch	**[Ignition switch: ON]** ● Shift lever: P or N (A/T models) ● Shift lever: Neutral (M/T models)	Approximately 0V
			[Ignition switch: ON] ● Except above position	BATTERY VOLTAGE (11 - 14V)

M/T MODELS

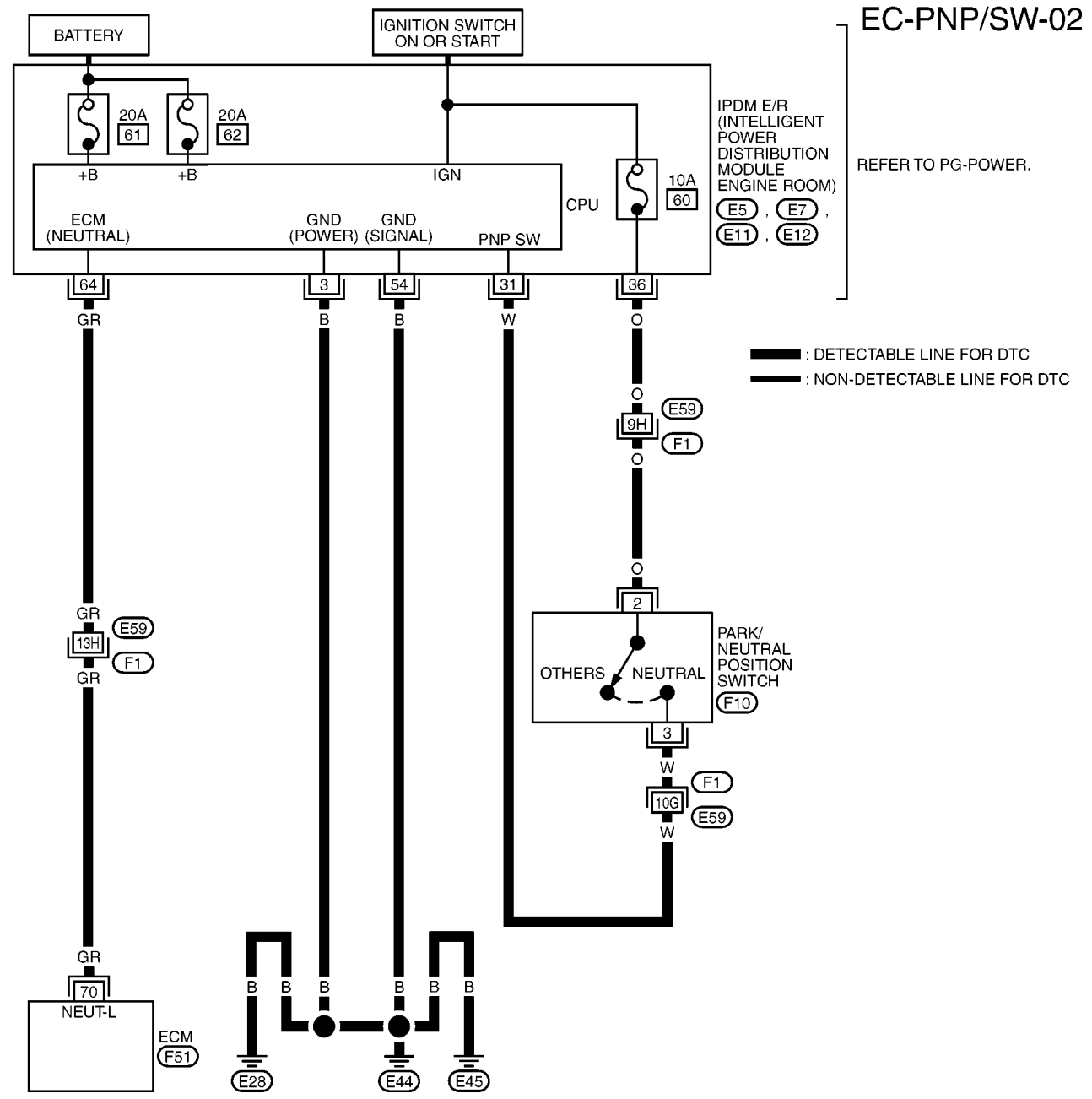

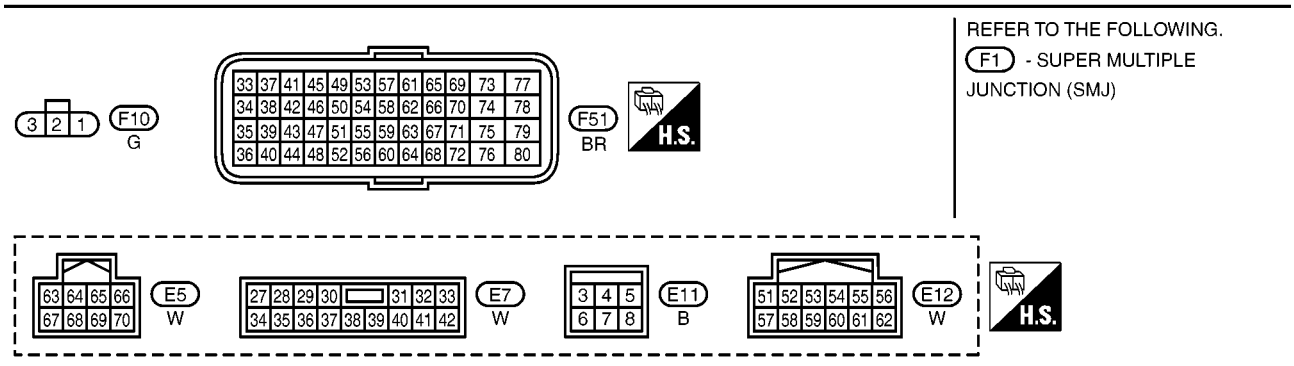

MBWA1480E

Specification data are reference values and are measured between each terminal and ground.

CAUTION:

Do not use ECM ground terminals when measuring input/output voltage. Doing so may result in damage to the ECM's transistor. Use a ground other than ECM terminals, such as the ground.

TERMINAL NO.	WIRE COLOR	ITEM	CONDITION	DATA (DC Voltage)
70	GR	Park/Neutral position (PNP) switch	**[Ignition switch: ON]** ● Shift lever: P or N (A/T models) ● Shift lever: Neutral (M/T models)	Approximately 0V
			[Ignition switch: ON] ● Except above position	BATTERY VOLTAGE (11 - 14V)

Diagnostic Procedure

BBS004Q8

1. CHECK PNP SWITCH CIRCUIT

1. Turn ignition switch ON.
2. Check voltage between IPDM E/R terminal 31 and ground under following condition.

Shift lever position	Voltage
P or N (A/T models) Neutral (M/T models)	Battery voltage (11- 14V)
Except above position	Approximately 0V

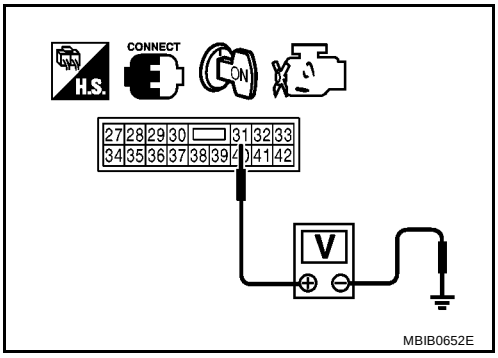

OK or NG

OK >> GO TO 8.
NG >> GO TO 2.

2. CHECK PNP SWITCH POWER SUPPLY CIRCUIT

1. Turn ignition switch OFF.
2. Disconnect PNP switch harness connector.
3. Turn ignition switch ON.
4. Check voltage between PNP switch terminal 1 (A/T models), 2 (M/T models) and ground with CONSULT-II or tester.

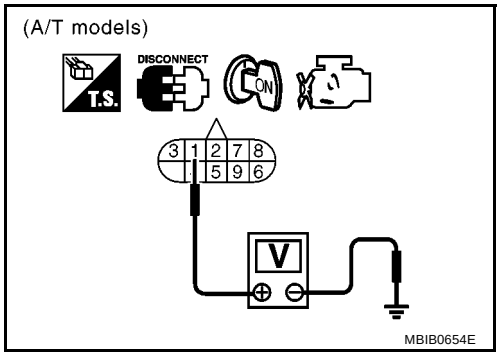

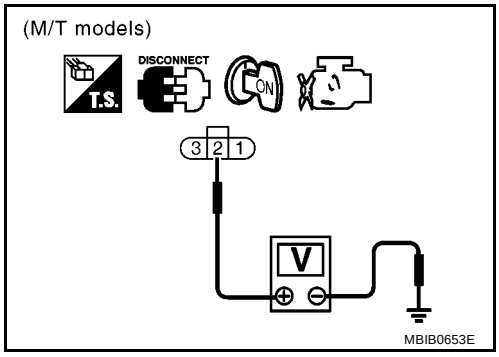

Voltage: Battery voltage

OK or NG

OK >> GO TO 4.
NG >> GO TO 3.

3. DETECT MALFUNCTIONING PARTS

Check the following.

- 10A fuse
- Harness connectors E59, F1
- IPDM E/R connector E7
- Harness for short or open between PNP switch and fuse

>> Repair or replace harness or connectors.

4. CHECK HARNESS CONTINUTY BETWEEN PNP SWITCH AND IPDM E/R

1. Turn ignition switch OFF.
2. Disconnect IPDM E/R harness connector E7.
3. Check harness continuity between IPDM E/R terminal 31 and PNP switch terminal 2 (A/T models), 3 (M/T models). Refer to Wiring Diagram.

Continuity should exist.

4. Also check harness for short to ground and short to power.

OK or NG

OK >> GO TO 6.
NG >> GO TO 5.

5. DETECT MALFUNCTIONING PART

Check the following.

- Harness connectors E59, F1
- Harness for open or short between IPDM E/R and PNP switch

>> Repair open circuit or short to ground or short to power in harness or connectors.

6. CHECK PNP SWITCH

Refer to AT-109, "Component Inspection" (A/T models) or MT-16, "Park/Neutral Position Switch" (M/T models).

OK or NG

OK >> GO TO 7.
NG >> Replace PNP switch.

7. CHECK INTERMITTENT INCIDENT

Refer to EC-1336, "TROUBLE DIAGNOSIS FOR INTERMITTENT INCIDENT" .

>> **INSPECTION END**

8. CHECK PNP SWITCH GROUND CIRCUIT FOR OPEN AND SHORT

1. Turn ignition switch OFF.
2. Disconnect IPDM E/R harness connectors E11 and E12.
3. Check harness continuity between IPDM E/R terminal 3, 54 and ground. Refer to Wiring Diagram.

Continuity should exist.

4. Also check harness for short to power.

OK or NG

OK >> GO TO 9.
NG >> Repair open circuit or short to power in harness or connectors.

9. CHECK PNP SWITCH INPUT SIGNAL CIRCUIT FOR OPEN AND SHORT

1. Disconnect IPDM E/R harness connector E5
2. Disconnect ECM harness connector.
3. Check harness continuity between ECM terminal 70 and IPDM E/R terminal 64.
   Refer to Wiring Diagram.

   Continuity should exist.

4. Also check harness for short to ground and short to power.

OK or NG

OK >> GO TO 10.
NG >> Repair open circuit or short to ground or short to power in harness or connectors.

10. CHECK INTERMITTENT INCIDENT

Refer to EC-1336, "TROUBLE DIAGNOSIS FOR INTERMITTENT INCIDENT" .

OK or NG

OK >> Replace IPDM E/R. Refer to PG-18, "IPDM E/R (INTELLIGENT POWER DISTRIBUTION MODULE ENGINE ROOM)" .
NG >> Repair or replace.

DTC P1805 BRAKE SWITCH

PFP:25320

Description

BBS004Q9

Brake switch signal is applied to the ECM through the stop lamp switch when the brake pedal is depressed. This signal is used mainly to decrease the engine speed when the vehicle is driving.

CONSULT-II Reference Value in Data Monitor Mode

BBS004QA

Specification data are reference values.

MONITOR ITEM	CONDITION		SPECIFICATION
BRAKE SW	● Ignition switch: ON	Brake pedal: Fully released	OFF
		Brake pedal: Slightly depressed	ON

On Board Diagnosis Logic

BBS004QB

This self-diagnosis has the one trip detection logic.

DTC No.	Trouble diagnosis name	DTC detecting condition	Possible cause
P1805 1805	Brake switch	A brake switch signal is not sent to ECM for extremely long time while the vehicle is driving.	● Harness or connectors (Stop lamp switch circuit is open or shorted.) ● Stop lamp switch

FAIL-SAFE MODE

BBS004QC

When the malfunction is detected, ECM enters fail-safe mode and MI light up.

Engine operation condition in fail-fail safe mode	
ECM controls the electric throttle control actuator by regulating the throttle opening to a small range. Therefore, acceleration will be poor.	
Vehicle condition	Driving condition
When engine is idling	Normal
When accelerating	Poor acceleration

DTC Confirmation Procedure

BBS004QD

WITH CONSULT-II

1. Turn ignition switch ON.
2. Fully depress the brake pedal for at least 5 seconds.
3. Erase the DTC with CONSULT-II.
4. Select “DATA MONITOR” mode with CONSULT-II.
5. If DTC is detected, go to EC-1489, "Diagnostic Procedure" .

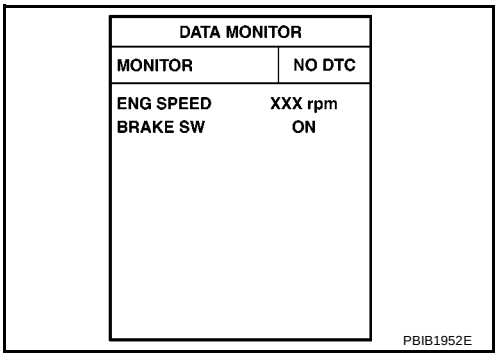

WITHOUT CONSULT-II

1. Turn ignition switch ON.
2. Fully depress the brake pedal for at least 5 seconds.
3. Erase the Diagnostic Test Mode II (Self-diagnostic results) memory.
   Refer to EC-1269, "How to Erase Diagnostic Test Mode II (Self-diagnostic Results)" .
4. Turn ignition switch OFF, wait at least 10 seconds and then turn ON.
5. Perform Diagnostic Test Mode II (Self-diagnostic results) with ECM.
6. If DTC is detected, go to EC-1489, "Diagnostic Procedure" .

Wiring Diagram

BBS004QE

EC-BRK/SW-01

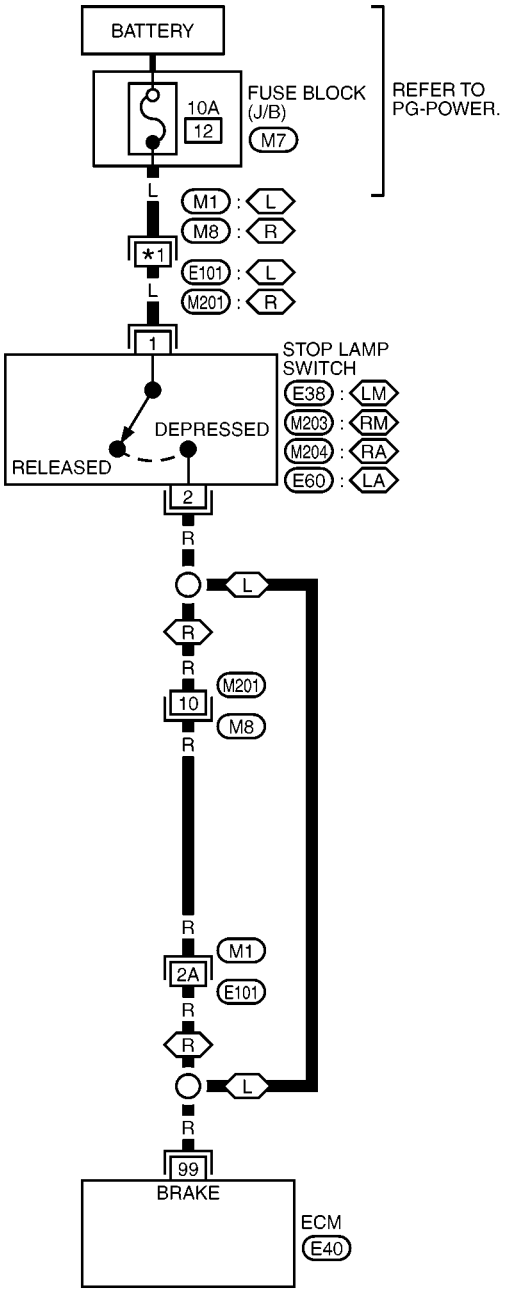

: DETECTABLE LINE FOR DTC
: NON-DETECTABLE LINE FOR DTC
L : LHD MODELS
R : RHD MODELS
LM : LHD MODELS WITH M/T
RM : RHD MODELS WITH M/T
LA : LHD MODELS WITH A/T
RA : RHD MODELS WITH A/T

*1 7A : L
9 : R

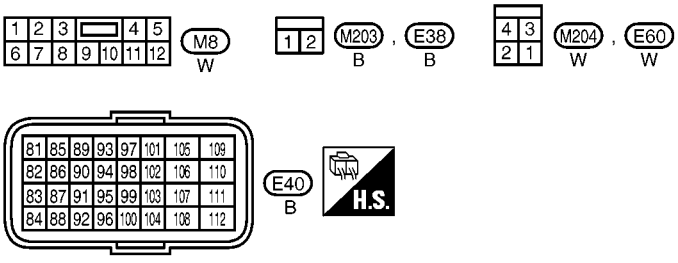

REFER TO THE FOLLOWING.
M1 - SUPER MULTIPLE JUNCTION (SMJ)
M7 - FUSE BLOCK - JUNCTION BOX (J/B)

MBWA1481E

Specification data are reference values and are measured between each terminal and ground.

CAUTION:

Do not use ECM ground terminals when measuring input/output voltage. Doing so may result in damage to the ECM's transistor. Use a ground other than ECM terminals, such as the ground.

TERMINAL NO.	WIRE COLOR	ITEM	CONDITION	DATA (DC Voltage)
99	R	Stop lamp switch	**[Ignition switch: OFF]** ● Brake pedal: Fully released	Approximately 0V
			[Ignition switch: OFF] ● Brake pedal: Slightly depressed	BATTERY VOLTAGE (11 - 14V)

Diagnostic Procedure

BBS004QF

1. CHECK STOP LAMP SWITCH CIRCUIT

1. Turn ignition switch OFF.
2. Check the stop lamp when depressing and releasing the brake pedal.

Brake pedal	Stop lamp
Fully released	Not illuminated
Slightly depressed	Illuminated

OK or NG

OK >> GO TO 4.
NG >> GO TO 2.

2. CHECK STOP LAMP SWITCH POWER SUPPLY CIRCUIT

1. Disconnect stop lamp switch (1) harness connector.
– Brake pedal (2)

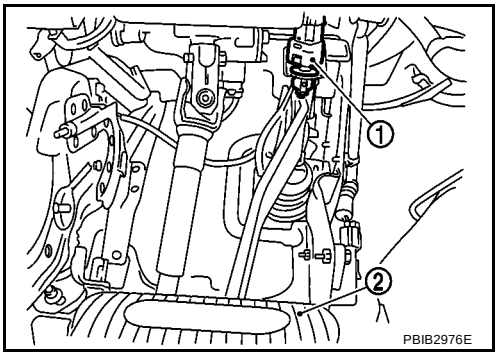

2. Check voltage between stop lamp switch terminal 1 and ground with CONSULT-II or tester.

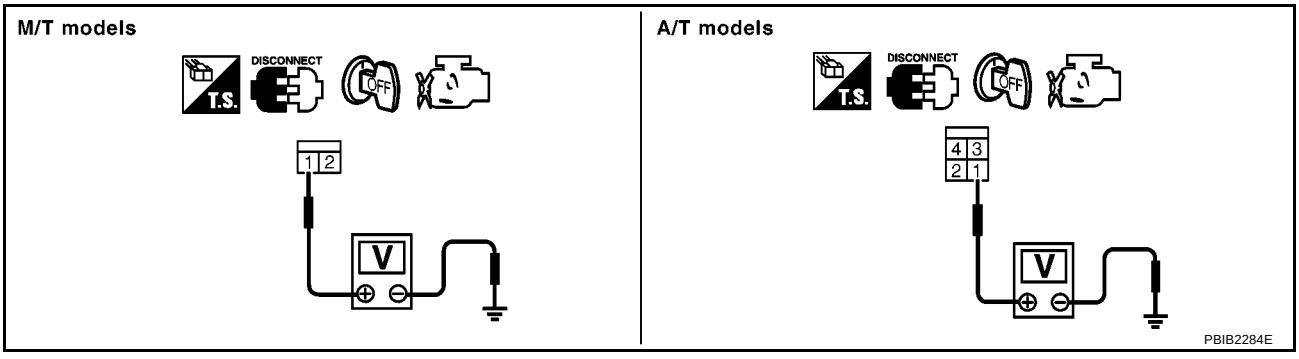

Voltage: Battery voltage

OK or NG

OK >> GO TO 4.
NG >> GO TO 3.

3. DETECT MALFUNCTIONING PART

Check the following.

- Harness connectors M1, E101 (LHD models)
- Harness connectors M8, M201 (RHD models)
- 10A fuse
- Harness for open and short between stop lamp switch and battery

>> Repair open circuit or short to ground or short to power in harness or connectors.

4. CHECK STOP LAMP SWITCH INPUT SIGNAL CIRCUIT FOR OPEN AND SHORT

1. Disconnect stop lamp switch (1) harness connector.
– Brake pedal (2)
2. Disconnect ECM harness connector.
3. Check harness continuity between stop lamp switch terminal 2 and ECM terminal 99.
Refer to Wiring Diagram.

Continuity should exist.

4. Also check harness for short to ground and short to power.

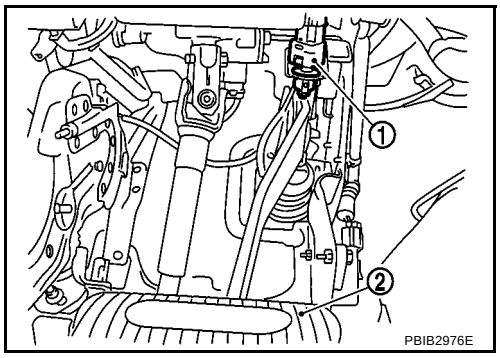

OK or NG

OK >> GO TO 6.
NG >> GO TO 5.

5. DETECT MALFUNCTIONING PART

Check the following.

- Harness connectors M8, M201 (RHD models)
- Harness connectors M1, E101 (RHD models)
- Harness for open and short between stop lamp switch and ECM

>> Repair open circuit or short to ground or short to power in harness connectors.

6. CHECK STOP LAMP SWITCH

Refer to EC-1491, "Component Inspection" .

OK or NG

OK >> GO TO 7.
NG >> Replace stop lamp switch.

7. CHECK INTERMITTENT INCIDENT

Refer to EC-1336, "TROUBLE DIAGNOSIS FOR INTERMITTENT INCIDENT" .

>> **INSPECTION END**

Component Inspection

BBS004QG

STOP LAMP SWITCH

1. Turn ignition switch OFF.
2. Disconnect stop lamp switch harness connector.
3. Check continuity between stop lamp switch terminals 1 and 2 under the following conditions.

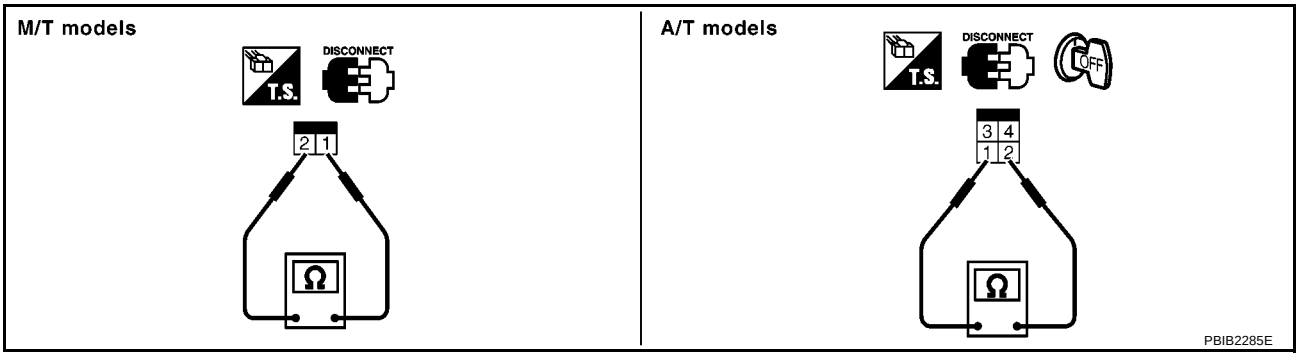

Condition	Continuity
Brake pedal: Fully released.	Should not exist.
Brake pedal: Slightly depressed.	Should exist.

If NG, adjust stop lamp switch installation, refer to BR-6, "BRAKE PEDAL" , and perform step 3 again.

DTC P2122, P2123 APP SENSOR

PFP:18002

Component Description

BBS004QH

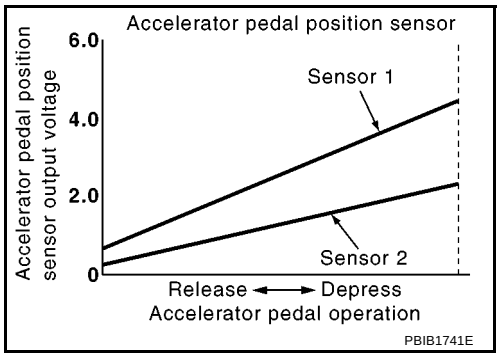

The accelerator pedal position sensor is installed on the upper end of the accelerator pedal assembly. The sensor detects the accelerator position and sends a signal to the ECM.
Accelerator pedal position sensor has two sensors. These sensors are a kind of potentiometers which transform the accelerator pedal position into output voltage, and emit the voltage signal to the ECM. In addition, these sensors detect the opening and closing speed of the accelerator pedal and feed the voltage signals to the ECM. The ECM judges the current opening angle of the accelerator pedal from these signals and controls the throttle control motor based on these signals.
Idle position of the accelerator pedal is determined by the ECM receiving the signal from the accelerator pedal position sensor. The ECM uses this signal for the engine operation such as fuel cut.

CONSULT-II Reference Value in Data Monitor Mode

BBS004QI

Specification data are reference values.

MONITOR ITEM	CONDITION		SPECIFICATION
ACCEL SEN 1	● Ignition switch: ON (Engine stopped)	Accelerator pedal: Fully released	0.6 - 0.9V
		Accelerator pedal: Fully depressed	4.0 - 4.8V
ACCEL SEN 2*	● Ignition switch: ON (Engine stopped)	Accelerator pedal: Fully released	0.6 - 0.9V
		Accelerator pedal: Fully depressed	3.9 - 4.8V
CLSD THL POS	● Ignition switch: ON (Engine stopped)	Accelerator pedal: Fully released	ON
		Accelerator pedal: Slightly depressed	OFF

*: Accelerator pedal position sensor 2 signal is converted by ECM internally. Thus, it differs from ECM terminal voltage.

On Board Diagnosis Logic

BBS004QJ

These self-diagnoses have the one trip detection logic.

NOTE:
If DTC P2122 or P2123 is displayed with DTC P1229, first perform the trouble diagnosis for DTC P1229. Refer to EC-1471, "DTC P1229 SENSOR POWER SUPPLY" .

DTC No.	Trouble diagnosis name	DTC detecting condition	Possible cause
P2122 2122	Accelerator pedal position sensor 1 circuit low input	An excessively low voltage from the APP sensor 1 is sent to ECM.	● Harness or connectors (APP sensor 1 circuit is open or shorted.) ● Accelerator pedal position sensor (APP sensor 1)
P2123 2123	Accelerator pedal position sensor 1 circuit high input	An excessively high voltage from the APP sensor 1 is sent to ECM.	

FAIL-SAFE MODE

When the malfunction is detected, ECM enters fail-safe mode and the MI lights up.

Engine operating condition in fail-safe mode
The ECM controls the electric throttle control actuator in regulating the throttle opening in order for the idle position to be within +10 degrees. The ECM regulates the opening speed of the throttle valve to be slower than the normal condition. So, the acceleration will be poor.

DTC Confirmation Procedure

BBS004QK

NOTE:
If DTC Confirmation Procedure has been previously conducted, always turn ignition switch OFF and wait at least 10 seconds before conducting the next test.
TESTING CONDITION:
Before performing the following procedure, confirm that battery voltage is more than 10V at idle.

WITH CONSULT-II

1. Turn ignition switch ON.
2. Select “DATA MONITOR” mode with CONSULT-II.
3. Start engine and let it idle for 1 second.
4. If DTC is detected, go to EC-1497, "Diagnostic Procedure" .

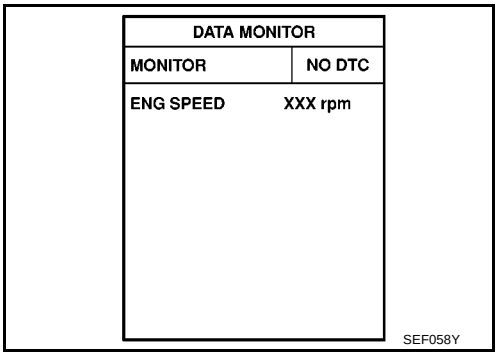

WITHOUT CONSULT-II

1. Start engine and let it idle for 1 second.
2. Turn ignition switch OFF, wait at least 10 seconds and then turn ON.
3. Perform Diagnostic Test Mode II (Self-diagnostic results) with ECM.
4. If DTC is detected, go to EC-1497, "Diagnostic Procedure" .

Wiring Diagram
LHD MODELS

BBS004QL

EC-APPS1-01

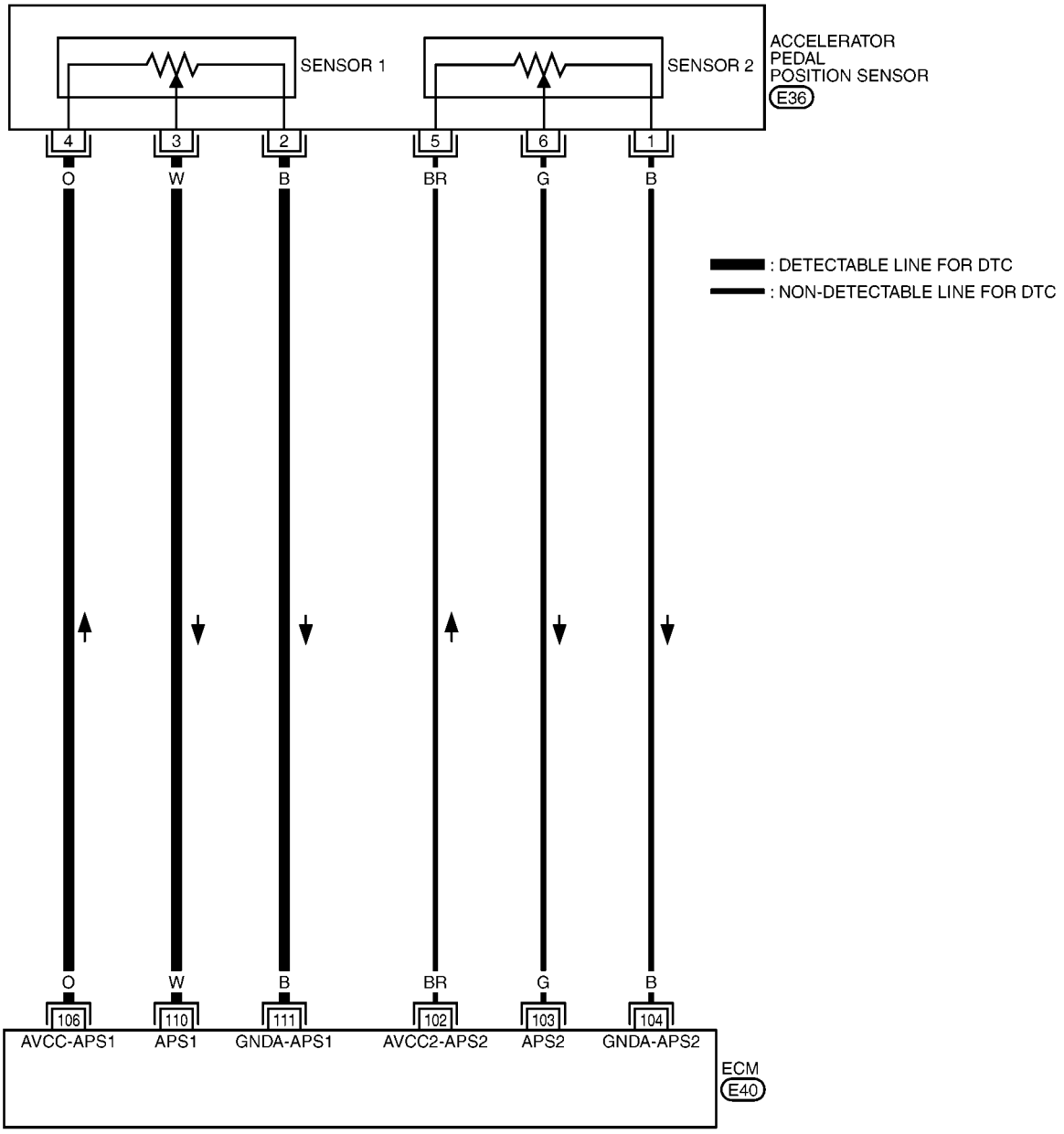

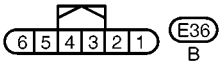

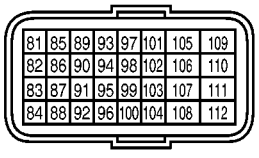

MBWA1482E

Specification data are reference values and are measured between each terminal and ground.

CAUTION:

Do not use ECM ground terminals when measuring input/output voltage. Doing so may result in damage to the ECM's transistor. Use a ground other than ECM terminals, such as the ground.

TERMINAL NO.	WIRE COLOR	ITEM	CONDITION	DATA (DC Voltage)
102	BR	Sensor power supply (APP sensor 2)	**[Ignition switch: ON]**	Approximately 5V
103	G	Accelerator pedal position sensor 2	**[Ignition switch: ON]** ● Engine stopped ● Accelerator pedal: Fully released	0.3 - 0.6V
			[Ignition switch: ON] ● Engine stopped ● Accelerator pedal: Fully depressed	1.95 - 2.4V
104	B	Sensor ground (APP sensor 2)	**[Engine is running]** ● **Warm-up condition** ● Idle speed	Approximately 0V
106	O	Sensor power supply (APP sensor 1)	**[Ignition switch: ON]**	Approximately 5V
110	W	Accelerator pedal position sensor 1	**[Ignition switch: ON]** ● Engine stopped ● Accelerator pedal: Fully released	0.6 - 0.9V
			[Ignition switch: ON] ● Engine stopped ● Accelerator pedal: Fully depressed	3.9 - 4.7V
111	B	Sensor ground (APP sensor 1)	**[Engine is running]** ● **Warm-up condition** ● Idle speed	Approximately 0V

RHD MODELS

EC-APPS1-02

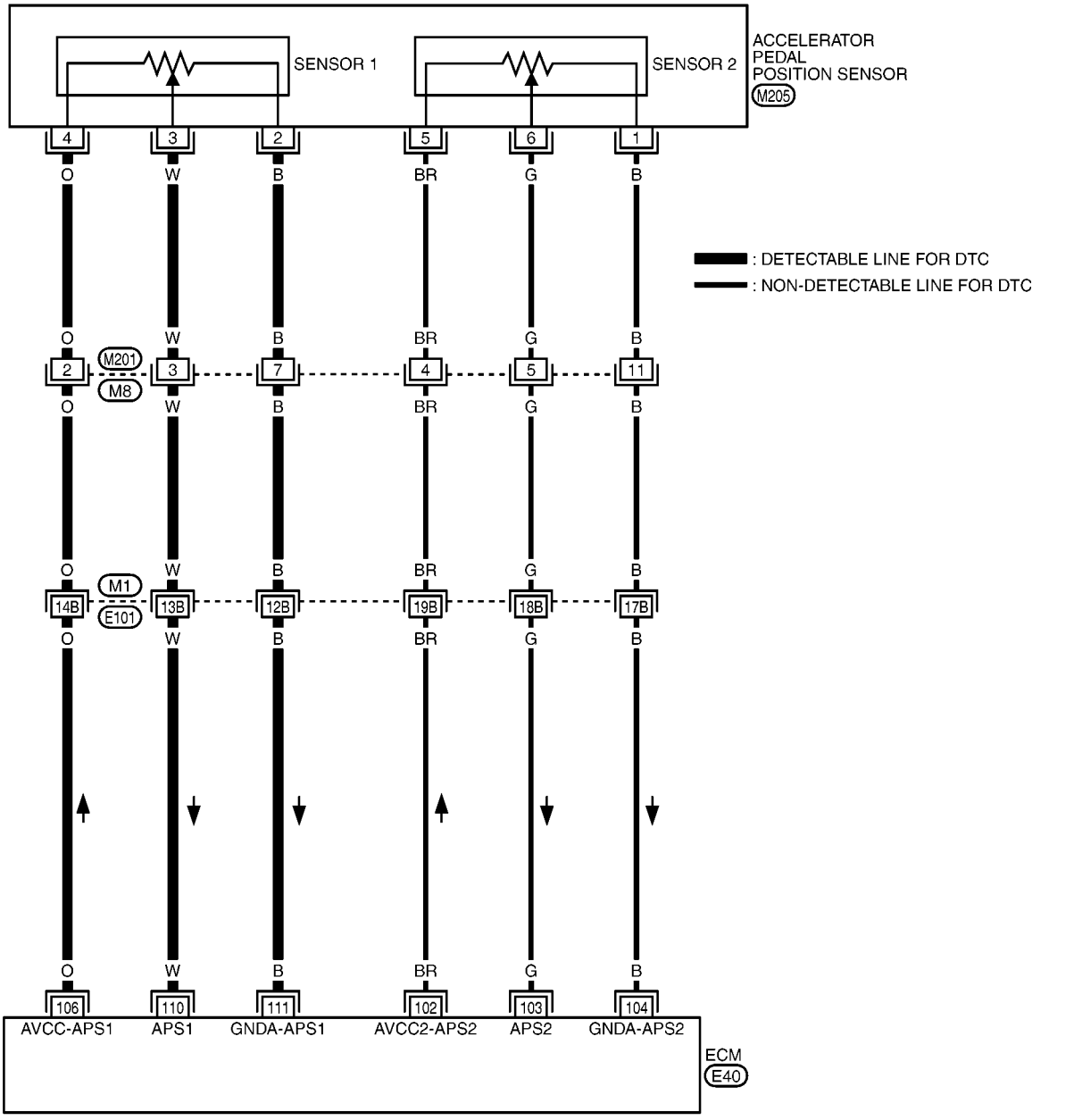

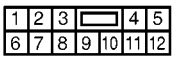

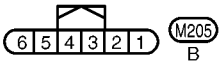

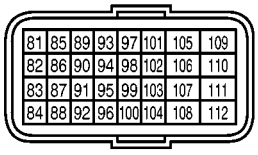

REFER TO THE FOLLOWING.
M1 - SUPER MULTIPLE JUNCTION (SMJ)

MBWA1483E

Specification data are reference values and are measured between each terminal and ground.

CAUTION:

Do not use ECM ground terminals when measuring input/output voltage. Doing so may result in damage to the ECM's transistor. Use a ground other than ECM terminals, such as the ground.

TERMINAL NO.	WIRE COLOR	ITEM	CONDITION	DATA (DC Voltage)
102	BR	Sensor power supply (APP sensor 2)	**[Ignition switch: ON]**	Approximately 5V
103	G	Accelerator pedal position sensor 2	**[Ignition switch: ON]** ● Engine stopped ● Accelerator pedal: Fully released	0.3 - 0.6V
			[Ignition switch: ON] ● Engine stopped ● Accelerator pedal: Fully depressed	1.95 - 2.4V
104	B	Sensor ground (APP sensor 2)	**[Engine is running]** ● **Warm-up condition** ● Idle speed	Approximately 0V
106	O	Sensor power supply (APP sensor 1)	**[Ignition switch: ON]**	Approximately 5V
110	W	Accelerator pedal position sensor 1	**[Ignition switch: ON]** ● Engine stopped ● Accelerator pedal: Fully released	0.6 - 0.9V
			[Ignition switch: ON] ● Engine stopped ● Accelerator pedal: Fully depressed	3.9 - 4.7V
111	B	Sensor ground (APP sensor 1)	**[Engine is running]** ● **Warm-up condition** ● Idle speed	Approximately 0V

Diagnostic Procedure

BBS004QM

1. CHECK GROUND CONNECTIONS

1. Turn ignition switch OFF.
2. Loosen and retighten ground screws on the body.
   Refer to EC-1342, "Ground Inspection" .

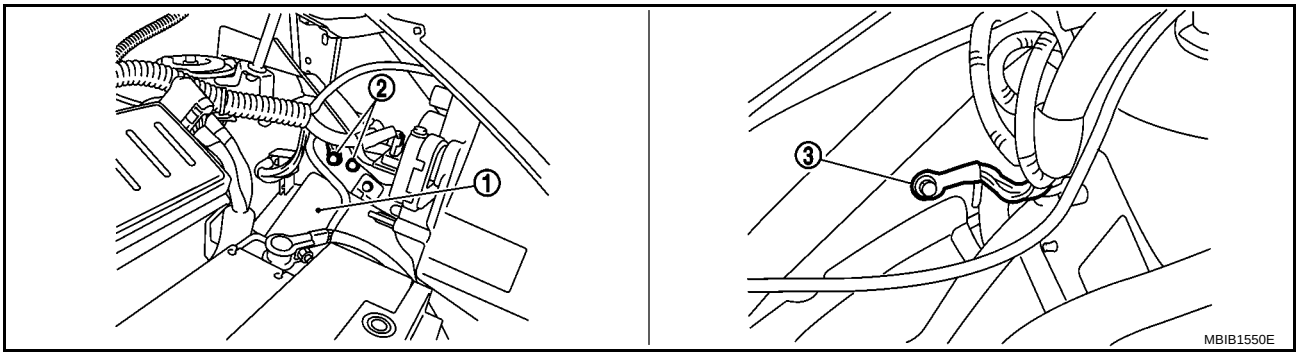

1. IPDM E/R
2. Body ground
3. Body ground

OK or NG

OK >> GO TO 2.
NG >> Repair or replace ground connections.

2. CHECK APP SENSOR 1 POWER SUPPLY CIRCUIT

1. Disconnect accelerator pedal position (APP) sensor harness connector (1).
   - Accelerator pedal position sensor (2)
   - Accelerator pedal (3)
2. Turn ignition switch ON.

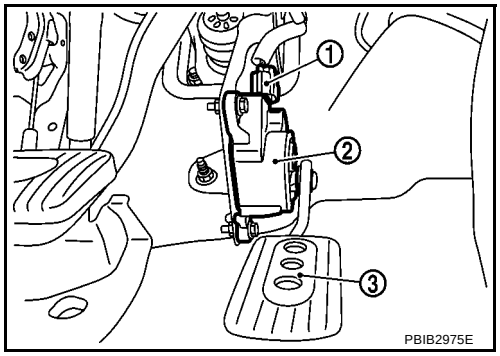

3. Check voltage between APP sensor terminal 4 and ground with CONSULT-II or tester.

   Voltage: Approximately 5V

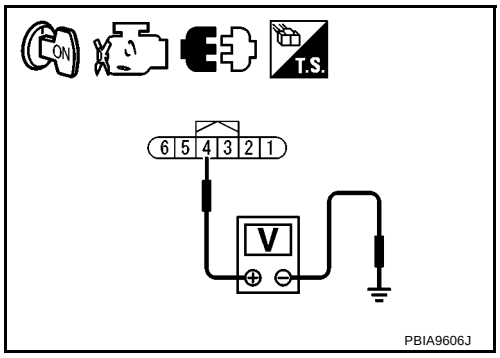

OK or NG

OK >> GO TO 4.
NG >> GO TO 3.

3. DETECT MALFUNCTIONING PART

Check the following.

- Harness connectors M201, M8 (RHD models)
- Harness connectors M1, E101 (RHD models)
- Harness for open or short between APP sensor and ECM

>> Repair open circuit or short to ground or short to power in harness or connectors.

4. CHECK APP SENSOR 1 GROUND CIRCUIT FOR OPEN AND SHORT

1. Turn ignition switch OFF.
2. Disconnect ECM harness connector.
3. Check harness continuity between ECM terminal 111 and APP sensor terminal 2.
   Refer to Wiring Diagram.

   Continuity should exist.

4. Also check harness for short to ground and short to power.

OK or NG

OK >> GO TO 6.
NG >> GO TO 5.

5. DETECT MALFUNCTIONING PART

Check the following.

- Harness connectors M201, M8 (RHD models)
- Harness connectors M1, E101 (RHD models)
- Harness for open or short between APP sensor and ECM

>> Repair open circuit or short to ground or short to power in harness or connectors.

6. CHECK APP SENSOR 1 INPUT SIGNAL CIRCUIT FOR OPEN AND SHORT

1. Check harness continuity between ECM terminal 110 and APP sensor terminal 3.
   Refer to Wiring Diagram.

   Continuity should exist.

2. Also check harness for short to ground and short to power.

OK or NG

OK >> GO TO 8.
NG >> GO TO 7.

7. DETECT MALFUNCTIONING PART

Check the following.

- Harness connectors M201, M8 (RHD models)
- Harness connectors M1, E101 (RHD models)
- Harness for open or short between APP sensor and ECM

>> Repair open circuit or short to ground or short to power in harness or connectors.

8. CHECK APP SENSOR

Refer to EC-1499, "Component Inspection" .

OK or NG

OK >> GO TO 10.
NG >> GO TO 9.

9. REPLACE ACCELERATOR PEDAL ASSEMBLY

1. Replace accelerator pedal assembly.
2. Perform EC-1278, "Accelerator Pedal Released Position Learning" .
3. Perform EC-1279, "Throttle Valve Closed Position Learning" .
4. Perform EC-1279, "Idle Air Volume Learning" .

>> **INSPECTION END**

10. CHECK INTERMITTENT INCIDENT

Refer to EC-1336, "TROUBLE DIAGNOSIS FOR INTERMITTENT INCIDENT" .

>> **INSPECTION END**

Component Inspection

BBS004QN

ACCELERATOR PEDAL POSITION SENSOR

1. Reconnect all harness connectors disconnected.
2. Turn ignition switch ON.

3. Check voltage between ECM terminals 110 (APP sensor 1 signal), 103 (APP sensor 2 signal) and ground under the following conditions.

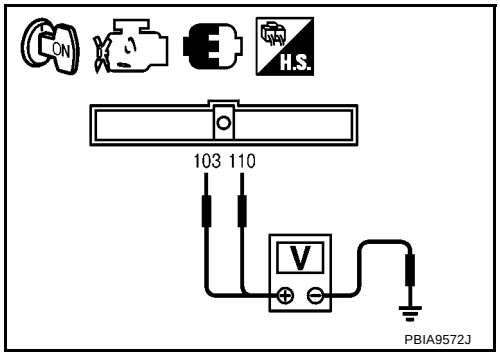

Terminal	Accelerator pedal	Voltage
110 (Accelerator pedal position sensor 1)	Fully released	0.6 - 0.9V
	Fully depressed	3.9 - 4.7V
103 (Accelerator pedal position sensor 2)	Fully released	0.3 - 0.6V
	Fully depressed	1.95 - 2.4V

4. If NG, replace accelerator pedal assembly and go to next step.
5. Perform EC-1278, "Accelerator Pedal Released Position Learning" .
6. Perform EC-1279, "Throttle Valve Closed Position Learning" .
7. Perform EC-1279, "Idle Air Volume Learning" .

Removal and Installation

BBS004QO

ACCELERATOR PEDAL

Refer to ACC-2, "ACCELERATOR CONTROL SYSTEM" .

DTC P2127, P2128 APP SENSOR

PFP:18002

Component Description

BBS004QP

The accelerator pedal position sensor is installed on the upper end of the accelerator pedal assembly. The sensor detects the accelerator position and sends a signal to the ECM.
Accelerator pedal position sensor has two sensors. These sensors are a kind of potentiometers which transform the accelerator pedal position into output voltage, and emit the voltage signal to the ECM. In addition, these sensors detect the opening and closing speed of the accelerator pedal and feed the voltage signals to the ECM. The ECM judges the current opening angle of the accelerator pedal from these signals and controls the throttle control motor based on these signals.

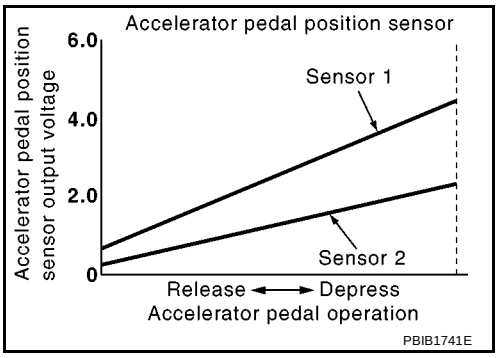

Idle position of the accelerator pedal is determined by the ECM receiving the signal from the accelerator pedal position sensor. The ECM uses this signal for the engine operation such as fuel cut.

CONSULT-II Reference Value in Data Monitor Mode

BBS004QQ

Specification data are reference values.

MONITOR ITEM	CONDITION		SPECIFICATION
ACCEL SEN 1	● Ignition switch: ON (Engine stopped)	Accelerator pedal: Fully released	0.6 - 0.9V
		Accelerator pedal: Fully depressed	4.0 - 4.8V
ACCEL SEN 2*	● Ignition switch: ON (Engine stopped)	Accelerator pedal: Fully released	0.6 - 0.9V
		Accelerator pedal: Fully depressed	3.9 - 4.8V
CLSD THL POS	● Ignition switch: ON (Engine stopped)	Accelerator pedal: Fully released	ON
		Accelerator pedal: Slightly depressed	OFF

*: Accelerator pedal position sensor 2 signal is converted by ECM internally. Thus, it differs from ECM terminal voltage.

On Board Diagnosis Logic

BBS004QR

These self-diagnoses have the one trip detection logic.

DTC No.	Trouble diagnosis name	DTC detecting condition	Possible cause
P2127 2127	Accelerator pedal position sensor 2 circuit low input	An excessively low voltage from the APP sensor 2 is sent to ECM.	● Harness or connectors (APP sensor 2 circuit is open or shorted.) [Crankshaft position sensor (POS) circuit is shorted.] (Refrigerant pressure sensor circuit is shorted.) ● Accelerator pedal position sensor (APP sensor 2) ● Crankshaft position sensor (POS) ● Refrigerant pressure sensor
P2128 2128	Accelerator pedal position sensor 2 circuit high input	An excessively high voltage from the APP sensor 2 is sent to ECM.	

FAIL-SAFE MODE

When the malfunction is detected, ECM enters fail-safe mode and the MI lights up.

Engine operating condition in fail-safe mode
The ECM controls the electric throttle control actuator in regulating the throttle opening in order for the idle position to be within +10 degrees. The ECM regulates the opening speed of the throttle valve to be slower than the normal condition. So, the acceleration will be poor.

DTC Confirmation Procedure

BBS004QS

NOTE:
If DTC Confirmation Procedure has been previously conducted, always turn ignition switch OFF and wait at least 10 seconds before conducting the next test.
TESTING CONDITION:
Before performing the following procedure, confirm that battery voltage is more than 10V at idle.

WITH CONSULT-II

1. Turn ignition switch ON.
2. Select “DATA MONITOR” mode with CONSULT-II.
3. Start engine and let it idle for 1 second.
4. If DTC is detected, go to EC-1507, "Diagnostic Procedure" .

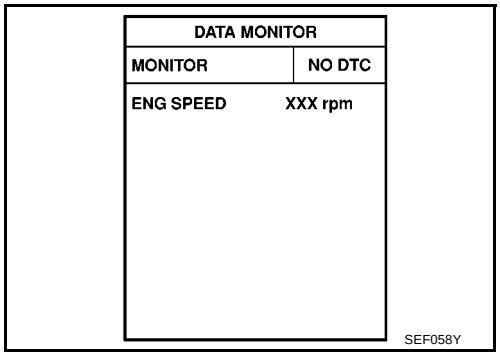

WITHOUT CONSULT-II

1. Start engine and let it idle for 1 second.
2. Turn ignition switch OFF, wait at least 10 seconds and then turn ON.
3. Perform Diagnostic Test Mode II (Self-diagnostic results) with ECM.
4. If DTC is detected, go to EC-1507, "Diagnostic Procedure" .

Wiring Diagram
LHD MODELS

BBS004QT

EC-APPS2-01

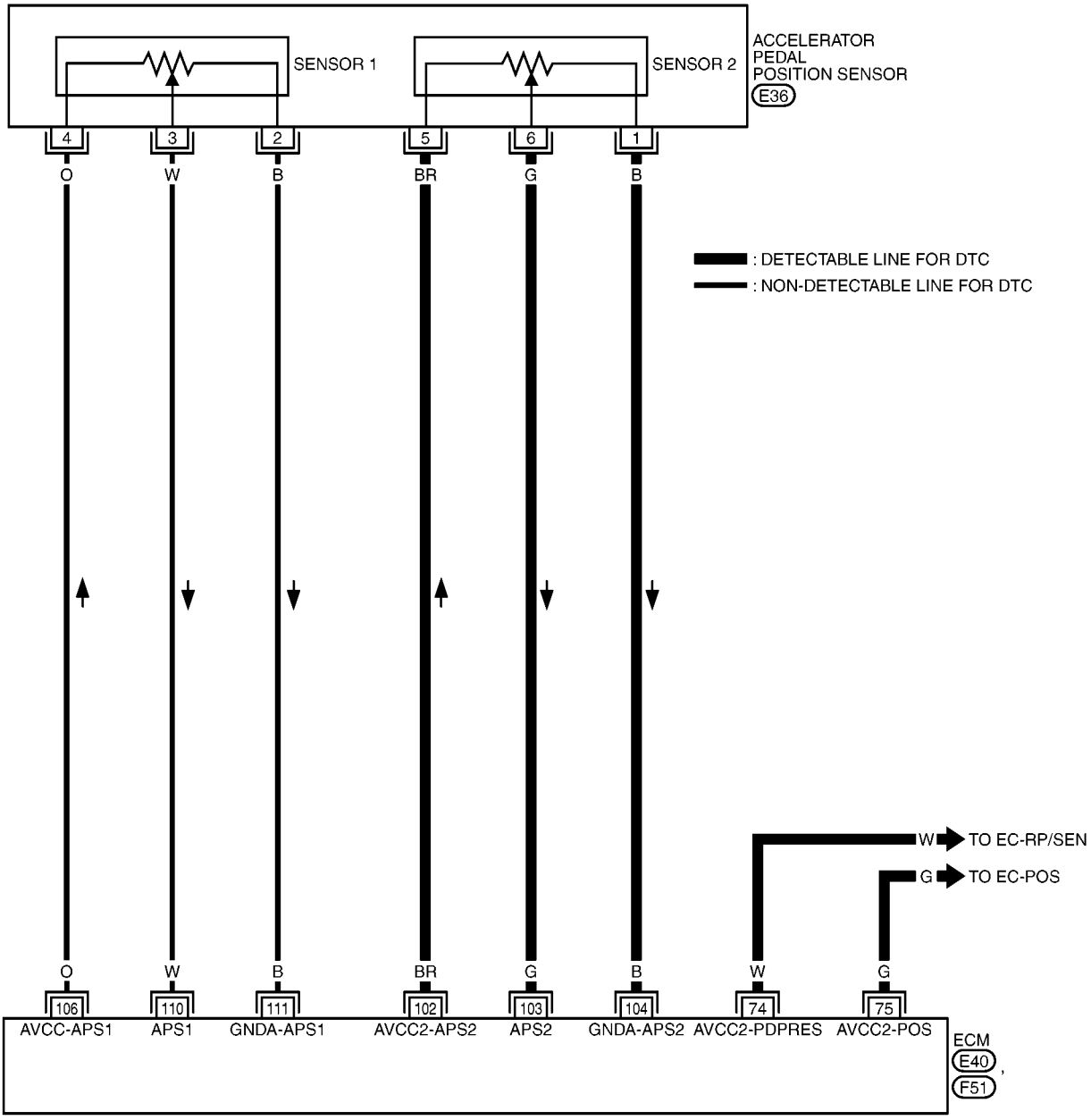

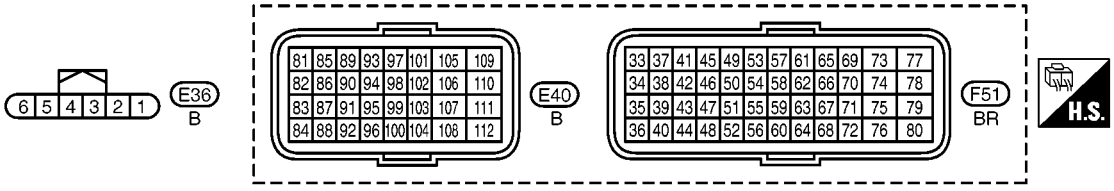

MBWA1484E

Specification data are reference values and are measured between each terminal and ground.

CAUTION:

Do not use ECM ground terminals when measuring input/output voltage. Doing so may result in damage to the ECM's transistor. Use a ground other than ECM terminals, such as the ground.

TERMINAL NO.	WIRE COLOR	ITEM	CONDITION	DATA (DC Voltage)
74	W	Sensor power supply (Refrigerant pressure sensor)	**[Ignition switch: ON]**	Approximately 5V
75	G	Sensor power supply [Crankshaft position sensor (POS)]	**[Ignition switch: ON]**	Approximately 5V
102	BR	Sensor power supply (APP sensor 2)	**[Ignition switch: ON]**	Approximately 5V
103	G	Accelerator pedal position sensor 2	**[Ignition switch: ON]** ● Engine stopped ● Accelerator pedal: Fully released	0.3 - 0.6V
			[Ignition switch: ON] ● Engine stopped ● Accelerator pedal: Fully depressed	1.95 - 2.4V
104	B	Sensor ground (APP sensor 2)	**[Engine is running]** ● **Warm-up condition** ● Idle speed	Approximately 0V
106	O	Sensor power supply (APP sensor 1)	**[Ignition switch: ON]**	Approximately 5V
110	W	Accelerator pedal position sensor 1	**[Ignition switch: ON]** ● Engine stopped ● Accelerator pedal: Fully released	0.6 - 0.9V
			[Ignition switch: ON] ● Engine stopped ● Accelerator pedal: Fully depressed	3.9 - 4.7V
111	B	Sensor ground (APP sensor 1)	**[Engine is running]** ● **Warm-up condition** ● Idle speed	Approximately 0V

RHD MODELS

EC-APPS2-02

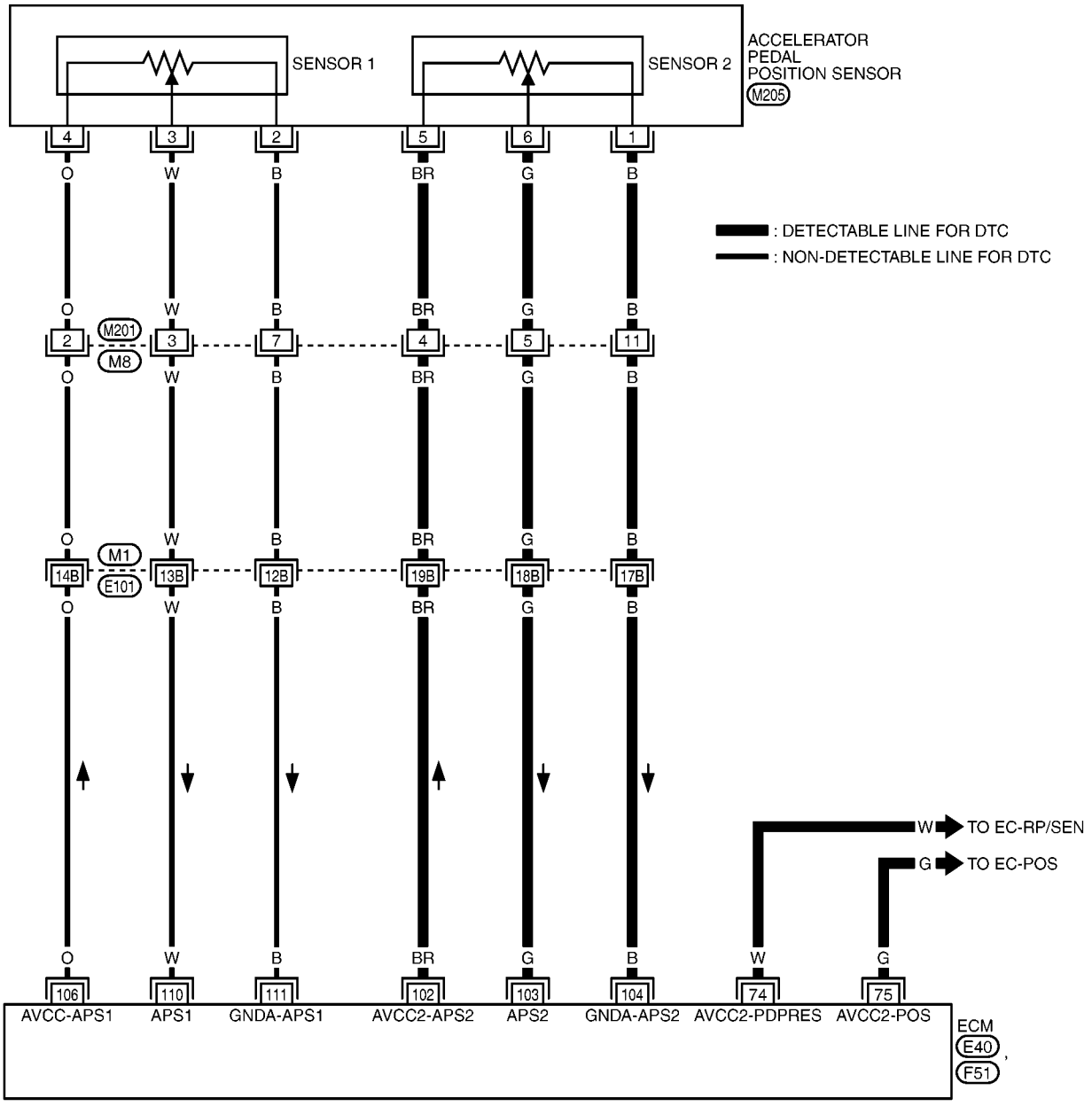

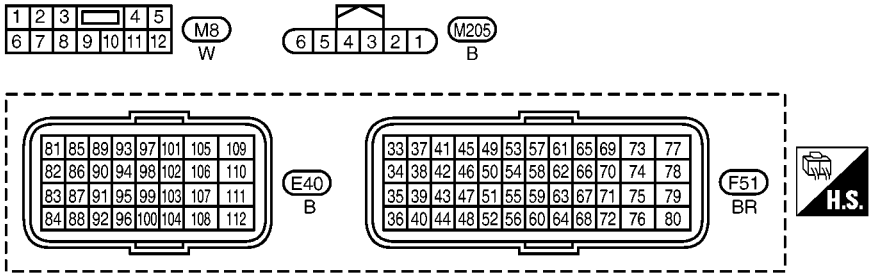

REFER TO THE FOLLOWING.
M1 - SUPER MULTIPLE JUNCTION (SMJ)

MBWA1485E

Specification data are reference values and are measured between each terminal and ground.

CAUTION:

Do not use ECM ground terminals when measuring input/output voltage. Doing so may result in damage to the ECM's transistor. Use a ground other than ECM terminals, such as the ground.

TERMINAL NO.	WIRE COLOR	ITEM	CONDITION	DATA (DC Voltage)
74	W	Sensor power supply (Refrigerant pressure sensor)	**[Ignition switch: ON]**	Approximately 5V
75	G	Sensor power supply [Crankshaft position sensor (POS)]	**[Ignition switch: ON]**	Approximately 5V
102	BR	Sensor power supply (APP sensor 2)	**[Ignition switch: ON]**	Approximately 5V
103	G	Accelerator pedal position sensor 2	**[Ignition switch: ON]** ● Engine stopped ● Accelerator pedal: Fully released	0.3 - 0.6V
			[Ignition switch: ON] ● Engine stopped ● Accelerator pedal: Fully depressed	1.95 - 2.4V
104	B	Sensor ground (APP sensor 2)	**[Engine is running]** ● **Warm-up condition** ● Idle speed	Approximately 0V
106	O	Sensor power supply (APP sensor 1)	**[Ignition switch: ON]**	Approximately 5V
110	W	Accelerator pedal position sensor 1	**[Ignition switch: ON]** ● Engine stopped ● Accelerator pedal: Fully released	0.6 - 0.9V
			[Ignition switch: ON] ● Engine stopped ● Accelerator pedal: Fully depressed	3.9 - 4.7V
111	B	Sensor ground (APP sensor 1)	**[Engine is running]** ● **Warm-up condition** ● Idle speed	Approximately 0V

Diagnostic Procedure

BBS004QU

1. CHECK GROUND CONNECTIONS

1. Turn ignition switch OFF.
2. Loosen and retighten ground screws on the body.
   Refer to EC-1342, "Ground Inspection" .

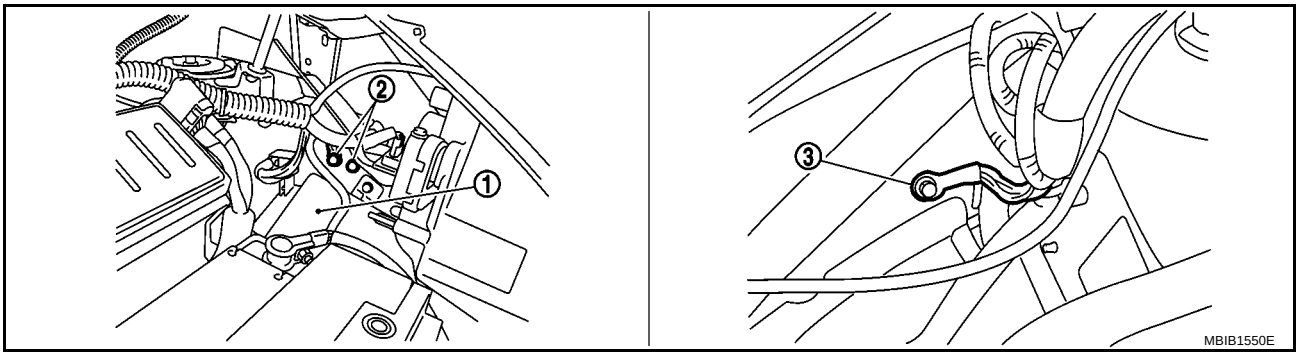

1. IPDM E/R
2. Body ground
3. Body ground

OK or NG

OK >> GO TO 2.
NG >> Repair or replace ground connections.

2. CHECK APP SENSOR 2 POWER SUPPLY CIRCUIT-I

1. Disconnect accelerator pedal position (APP) sensor harness connector (1).
   - Accelerator pedal position sensor (2)
   - Accelerator pedal (3)
2. Turn ignition switch ON.

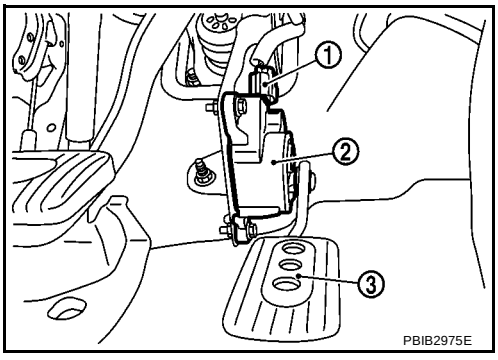

3. Check voltage between APP sensor terminal 5 and ground with CONSULT-II or tester.

   Voltage: Approximately 5V

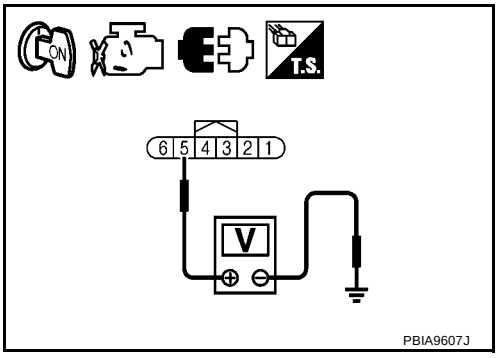

OK or NG

OK >> GO TO 7.
NG >> GO TO 3.

3. CHECK APP SENSOR 2 POWER SUPPLY CIRCUIT-II

1. Turn ignition switch OFF.
2. Disconnect ECM harness connector.
3. Check harness continuity between APP sensor terminal 5 and ECM terminal 102.
   Refer to Wiring Diagram.

Continuity should exist.

OK or NG

OK >> GO TO 5.
NG >> GO TO 4.

4. DETECT MALFUNCTIONING PART

Check the following.

- Harness connectors M201, M8 (RHD models)
- Harness connectors M1, E101 (RHD models)
- Harness for open or short between APP sensor and ECM

>> Repair open circuit in harness or connectors.

5. CHECK APP SENSOR 2 POWER SUPPLY CIRCUIT-III

Check harness for short to power and short to ground, between the following terminals.

ECM terminal	Sensor terminal	Reference Wiring Diagram
74	Refrigerant pressure sensor terminal 3	EC-1591, "Wiring Diagram"
75	Crankshaft position sensor (POS) terminal 1	EC-1407, "Wiring Diagram"
102	APP sensor terminal 5	EC-1503, "Wiring Diagram"

OK or NG

OK >> GO TO 6.
NG >> Repair short to ground or short to power in harness or connectors.

6. CHECK COMPONENTS

Check the following.

- Crankshaft position sensor (POS) (Refer to EC-1412, "Component Inspection" .)
- Refrigerant pressure sensor (Refer to ATC-85, "Refrigerant Pressure Sensor" .)

OK or NG

OK >> GO TO 13.
NG >> Replace malfunctioning component.

7. CHECK APP SENSOR 2 GROUND CIRCUIT FOR OPEN AND SHORT

1. Turn ignition switch OFF.
2. Disconnect ECM harness connector.
3. Check harness continuity between ECM terminal 104 and APP sensor terminal 1.
   Refer to Wiring Diagram.

Continuity should exist.

4. Also check harness for short to ground and short to power.

OK or NG

OK >> GO TO 9.
NG >> GO TO 8.

8. DETECT MALFUNCTIONING PART

Check the following.

- Harness connectors M201, M8 (RHD models)
- Harness connectors M1, E101 (RHD models)
- Harness for open or short between APP sensor and ECM

>> Repair open circuit or short to ground or short to power in harness or connectors.

9. CHECK APP SENSOR 2 INPUT SIGNAL CIRCUIT FOR OPEN AND SHORT

1. Check harness continuity between ECM terminal 103 and APP sensor terminal 6.
   Refer to Wiring Diagram.

   Continuity should exist.

2. Also check harness for short to ground and short to power.

OK or NG

OK >> GO TO 11.
NG >> GO TO 10.

10. DETECT MALFUNCTIONING PART

Check the following.

- Harness connectors M201, M8 (RHD models)
- Harness connectors M1, E101 (RHD models)
- Harness for open or short between APP sensor and ECM

>> Repair open circuit or short to ground or short to power in harness or connectors.

11. CHECK APP SENSOR

Refer to EC-1509, "Component Inspection" .

OK or NG

OK >> GO TO 13.
NG >> GO TO 12.

12. REPLACE ACCELERATOR PEDAL ASSEMBLY

1. Replace accelerator pedal assembly.
2. Perform EC-1278, "Accelerator Pedal Released Position Learning" .
3. Perform EC-1279, "Throttle Valve Closed Position Learning" .
4. Perform EC-1279, "Idle Air Volume Learning" .

>> **INSPECTION END**

13. CHECK INTERMITTENT INCIDENT

Refer to EC-1336, "TROUBLE DIAGNOSIS FOR INTERMITTENT INCIDENT" .

>> **INSPECTION END**

Component Inspection

BBS004QV

ACCELERATOR PEDAL POSITION SENSOR

1. Reconnect all harness connectors disconnected.
2. Turn ignition switch ON.

3. Check voltage between ECM terminals 110 (APP sensor 1 signal), 103 (APP sensor 2 signal) and ground under the following conditions.

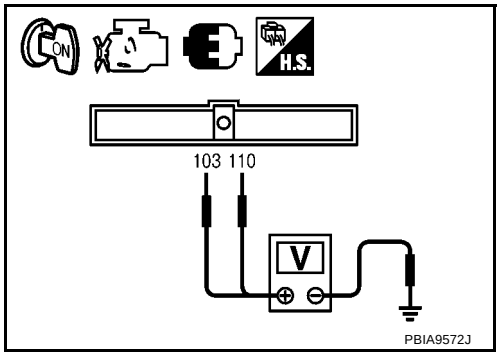

Terminal	Accelerator pedal	Voltage
110 (Accelerator pedal position sensor 1)	Fully released	0.6 - 0.9V
	Fully depressed	3.9 - 4.7V
103 (Accelerator pedal position sensor 2)	Fully released	0.3 - 0.6V
	Fully depressed	1.95 - 2.4V

4. If NG, replace accelerator pedal assembly and go to next step.
5. Perform EC-1278, "Accelerator Pedal Released Position Learning" .
6. Perform EC-1279, "Throttle Valve Closed Position Learning" .
7. Perform EC-1279, "Idle Air Volume Learning" .

Removal and Installation

BBS004QW

ACCELERATOR PEDAL

Refer to ACC-2, "ACCELERATOR CONTROL SYSTEM" .

DTC P2135 TP SENSOR

PFP:16119

Component Description

BBS004QX

Electric throttle control actuator consists of throttle control motor, throttle position sensor, etc. The throttle position sensor responds to the throttle valve movement.
The throttle position sensor has the two sensors. These sensors are a kind of potentiometers which transform the throttle valve position into output voltage, and emit the voltage signal to the ECM. In addition, these sensors detect the opening and closing speed of the throttle valve and feed the voltage signals to the ECM. The ECM judges the current opening angle of the throttle valve from these signals and the ECM controls the throttle control motor to make the throttle valve opening angle properly in response to driving condition.

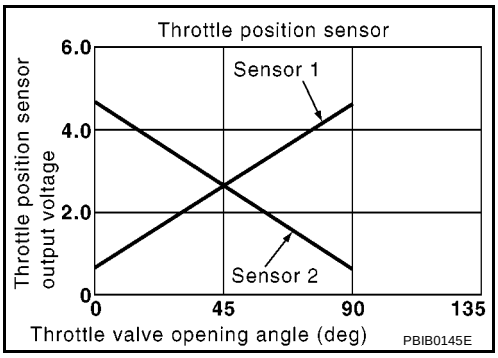

CONSULT-II Reference Value in Data Monitor Mode

BBS004QY

Specification data are reference values.

MONITOR ITEM	CONDITION		SPECIFICATION
THRTL SEN 1 THRTL SEN 2*	● Ignition switch: ON (Engine stopped)	Accelerator pedal: Fully released	More than 0.36V
	● Shift lever: D (A/T), 1st (M/T)	Accelerator pedal: Fully depressed	Less than 4.75V

*: Throttle position sensor 2 signal is converted by ECM internally. Thus, it differs from ECM terminal voltage signal.

On Board Diagnosis Logic

BBS004QZ

This self-diagnosis has the one trip detection logic.

NOTE:
If DTC P2135 is displayed with DTC P1229, first perform the trouble diagnosis for DTC P1229. Refer to **EC-1471, "DTC P1229 SENSOR POWER SUPPLY"** **.**

DTC No.	Trouble diagnosis name	DTC detecting condition	Possible cause
P2135 2135	Throttle position sensor circuit range/performance	Rationally incorrect voltage is sent to ECM compared with the signals from TP sensor 1 and TP sensor 2.	● Harness or connector (TP sensor 1 and 2 circuit is open or shorted.) ● Electric throttle control actuator (TP sensor 1 and 2)

FAIL-SAFE MODE

When the malfunction is detected, the ECM enters fail-safe mode and the MI lights up.

Engine operation condition in fail-safe mode
The ECM controls the electric throttle control actuator in regulating the throttle opening in order for the idle position to be within +10 degrees. The ECM regulates the opening speed of the throttle valve to be slower than the normal condition. So, the acceleration will be poor.

DTC Confirmation Procedure

BBS004R0

NOTE:
If DTC Confirmation Procedure has been previously conducted, always turn ignition switch OFF and wait at least 10 seconds before conducting the next test.
TESTING CONDITION:
Before performing the following procedure, confirm that battery voltage is more than 10V at idle.

WITH CONSULT-II

1. Turn ignition switch ON.
2. Select “DATA MONITOR” mode with CONSULT-II.
3. Start engine and let it idle for 1 second.
4. If DTC is detected, go to EC-1514, "Diagnostic Procedure" .

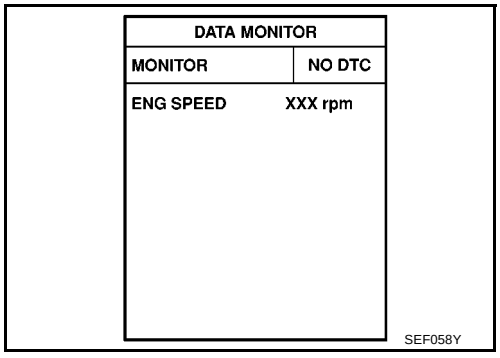

WITHOUT CONSULT-II

1. Start engine and let it idle for 1 second.
2. Turn ignition switch OFF, wait at least 10 seconds and then turn ON.
3. Perform Diagnostic Test Mode II (Self-diagnostic results) with ECM.
4. If DTC is detected, go to EC-1514, "Diagnostic Procedure" .

Wiring Diagram

BBS004R1

EC-TPS3-01

: DETECTABLE LINE FOR DTC
: NON-DETECTABLE LINE FOR DTC

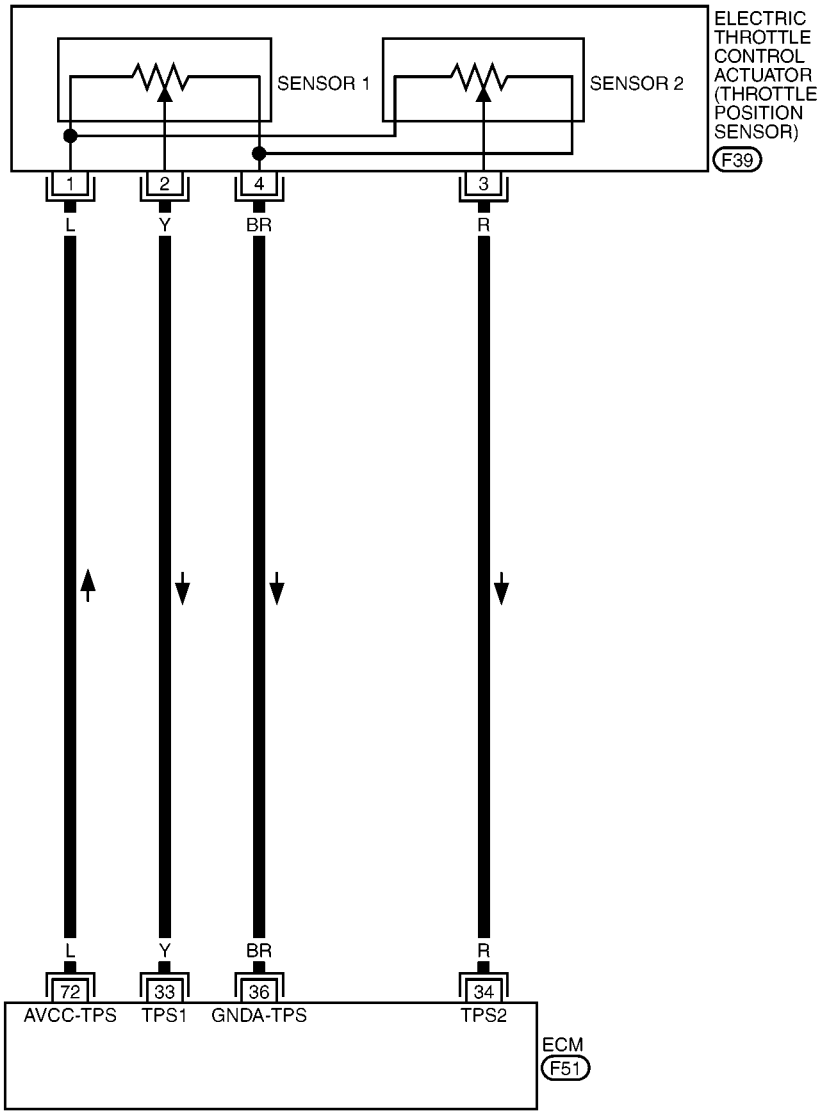

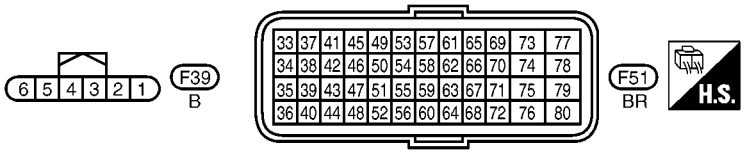

MBWA1486E

Specification data are reference values and are measured between each terminal and ground.

CAUTION:

Do not use ECM ground terminals when measuring input/output voltage. Doing so may result in damage to the ECM's transistor. Use a ground other than ECM terminals, such as the ground.

TERMINAL NO.	WIRE COLOR	ITEM	CONDITION	DATA (DC Voltage)
33	Y	Throttle position sensor 1	**[Ignition switch: ON]** ● Engine stopped ● Shift lever: D (A/T), 1st (M/T) ● Accelerator pedal: Fully released	More than 0.36V
			[Ignition switch: ON] ● Engine stopped ● Shift lever: D (A/T), 1st (M/T) ● Accelerator pedal: Fully depressed	Less than 4.75V
34	R	Throttle position sensor 2	**[Ignition switch: ON]** ● Engine stopped ● Shift lever: D (A/T), 1st (M/T) ● Accelerator pedal: Fully released	Less than 4.75V
			[Ignition switch: ON] ● Engine stopped ● Shift lever: D (A/T), 1st (M/T) ● Accelerator pedal: Fully depressed	More than 0.36V
36	BR	Sensor ground (Throttle position sensor)	**[Engine is running]** ● **Warm-up condition** ● Idle speed	Approximately 0V
72	L	Sensor power supply (Throttle position sensor)	**[Ignition switch: ON]**	Approximately 5V

Diagnostic Procedure

BBS004R2

1. CHECK GROUND CONNECTIONS

1. Turn ignition switch OFF.
2. Loosen and retighten ground screws on the body.
   Refer to EC-1342, "Ground Inspection" .

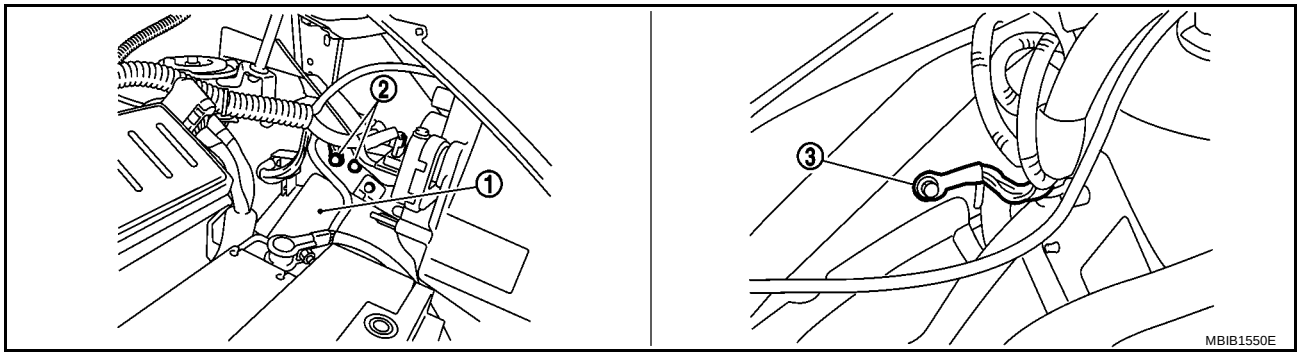

1. IPDM E/R
2. Body ground
3. Body ground

OK or NG

OK >> GO TO 2.
NG >> Repair or replace ground connections.

2. CHECK THROTTLE POSITION SENSOR POWER SUPPLY CIRCUIT

1. Disconnect electric throttle control actuator (1) harness connector.
   ⇦: Vehicle front
2. Turn ignition switch ON.

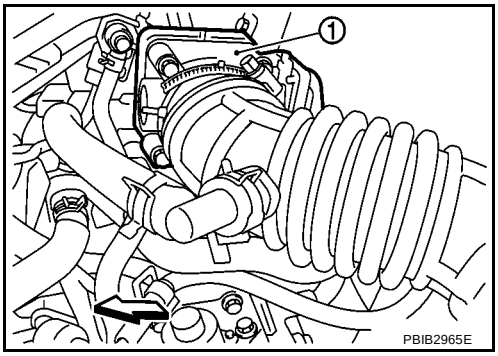

3. Check voltage between electric throttle control actuator terminal 1 and ground with CONSULT-II or tester.

   Voltage: Approximately 5V

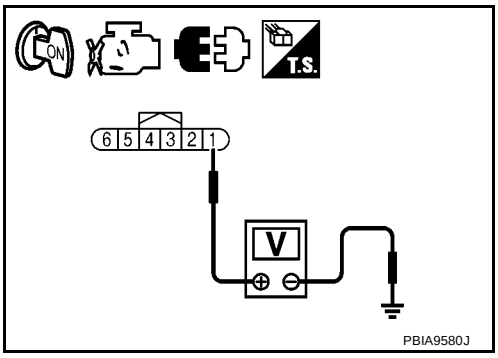

OK or NG

OK >> GO TO 3.
NG >> Repair open circuit or short to ground or short to power in harness or connectors.

3. CHECK THROTTLE POSITION SENSOR GROUND CIRCUIT FOR OPEN AND SHORT

1. Turn ignition switch OFF.
2. Disconnect ECM harness connector.
3. Check harness continuity between electric throttle control actuator terminal 4 and ECM terminal 36.
   Refer to Wiring Diagram.

   Continuity should exist.

4. Also check harness for short to ground and short to power.

OK or NG

OK >> GO TO 4.
NG >> Repair open circuit or short to ground or short to power in harness or connectors.

4. CHECK THROTTLE POSITION SENSOR INPUT SIGNAL CIRCUIT FOR OPEN AND SHORT

1. Check harness continuity between electric throttle control actuator terminal 2 and ECM terminal 33, electric throttle control actuator terminal 3 and ECM terminal 34.
   Refer to Wiring Diagram.

   Continuity should exist.

2. Also check harness for short to ground and short to power.

OK or NG

OK >> GO TO 5.
NG >> Repair open circuit or short to ground or short to power in harness or connectors.

5. CHECK THROTTLE POSITION SENSOR

Refer to EC-1516, "Component Inspection" .

OK or NG

OK >> GO TO 7.
NG >> GO TO 6.

6. REPLACE ELECTRIC THROTTLE CONTROL ACTUATOR

1. Replace the electric throttle control actuator.
2. Perform EC-1279, "Throttle Valve Closed Position Learning" .
3. Perform EC-1279, "Idle Air Volume Learning" .

>> **INSPECTION END**

7. CHECK INTERMITTENT INCIDENT

Refer to EC-1336, "TROUBLE DIAGNOSIS FOR INTERMITTENT INCIDENT" .

>> **INSPECTION END**

Component Inspection

BBS004R3

THROTTLE POSITION SENSOR

1. Reconnect all harness connectors disconnected.
2. Perform EC-1279, "Throttle Valve Closed Position Learning" .
3. Turn ignition switch ON.
4. Set shift lever to D position (A/T) or 1st position (M/T).
5. Check voltage between ECM terminals 33 (TP sensor 1 signal), 34 (TP sensor 2 signal) and ground under the following conditions.

Terminal	Accelerator pedal	Voltage
33 (Throttle position sensor 1)	Fully released	More than 0.36V
	Fully depressed	Less than 4.75V
34 (Throttle position sensor 2)	Fully released	Less than 4.75V
	Fully depressed	More than 0.36V

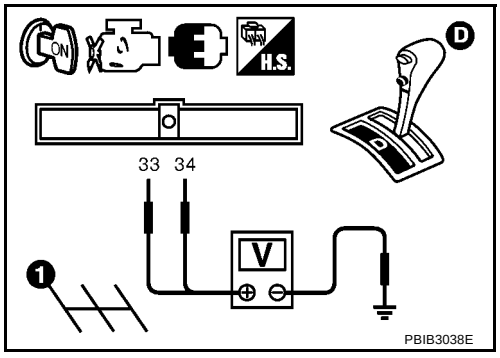

6. If NG, replace electric throttle control actuator and go to the next step.
7. Perform EC-1279, "Throttle Valve Closed Position Learning" .
8. Perform EC-1279, "Idle Air Volume Learning" .

Removal and Installation

BBS004R4

ELECTRIC THROTTLE CONTROL ACTUATOR

Refer to EM-120, "INTAKE MANIFOLD" .

DTC P2138 APP SENSOR

PFP:18002

Component Description

BBS004R5

The accelerator pedal position sensor is installed on the upper end of the accelerator pedal assembly. The sensor detects the accelerator position and sends a signal to the ECM.
Accelerator pedal position sensor has two sensors. These sensors are a kind of potentiometers which transform the accelerator pedal position into output voltage, and emit the voltage signal to the ECM. In addition, these sensors detect the opening and closing speed of the accelerator pedal and feed the voltage signals to the ECM. The ECM judges the current opening angle of the accelerator pedal from these signals and controls the throttle control motor based on these signals.

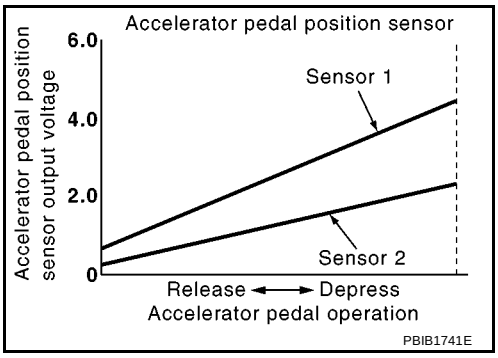

Idle position of the accelerator pedal is determined by the ECM receiving the signal from the accelerator pedal position sensor. The ECM uses this signal for the engine operation such as fuel cut.

CONSULT-II Reference Value in Data Monitor Mode

BBS004R6

Specification data are reference values.

MONITOR ITEM	CONDITION		SPECIFICATION
ACCEL SEN 1	● Ignition switch: ON (Engine stopped)	Accelerator pedal: Fully released	0.6 - 0.9V
		Accelerator pedal: Fully depressed	4.0 - 4.8V
ACCEL SEN 2*	● Ignition switch: ON (Engine stopped)	Accelerator pedal: Fully released	0.6 - 0.9V
		Accelerator pedal: Fully depressed	3.9 - 4.8V
CLSD THL POS	● Ignition switch: ON (Engine stopped)	Accelerator pedal: Fully released	ON
		Accelerator pedal: Slightly depressed	OFF

*: Accelerator pedal position sensor 2 signal is converted by ECM internally. Thus, it differs from ECM terminal voltage.

On Board Diagnosis Logic

BBS004R7

This self-diagnosis has the one trip detection logic.

NOTE:
If DTC P2138 is displayed with DTC P1229, first perform the trouble diagnosis for DTC P1229. Refer to **EC-1471, "DTC P1229 SENSOR POWER SUPPLY"** **.**

DTC No.	Trouble diagnosis name	DTC detecting condition	Possible cause
P2138 2138	Accelerator pedal position sensor circuit range/performance	Rationally incorrect voltage is sent to ECM compared with the signals from APP sensor 1 and APP sensor 2.	● Harness or connector (APP sensor 1 and 2 circuit is open or shorted.) [Crankshaft position sensor (POS) circuit is shorted.] (Refrigerant pressure sensor circuit is shorted.) ● Accelerator pedal position sensor (APP sensor 1 and 2) ● Crankshaft position sensor (POS) ● Refrigerant pressure sensor

FAIL-SAFE MODE

When the malfunction is detected, ECM enters fail-safe mode and the MI lights up.

Engine operating condition in fail-safe mode
The ECM controls the electric throttle control actuator in regulating the throttle opening in order for the idle position to be within +10 degrees. The ECM regulates the opening speed of the throttle valve to be slower than the normal condition. So, the acceleration will be poor.

DTC Confirmation Procedure

BBS004R8

NOTE:
If DTC Confirmation Procedure has been previously conducted, always turn ignition switch OFF and wait at least 10 seconds before conducting the next test.
TESTING CONDITION:
Before performing the following procedure, confirm that battery voltage is more than 10V at idle.

WITH CONSULT-II

1. Turn ignition switch ON.
2. Select “DATA MONITOR” mode with CONSULT-II.
3. Start engine and let it idle for 1 second.
4. If DTC is detected, go to EC-1523, "Diagnostic Procedure" .

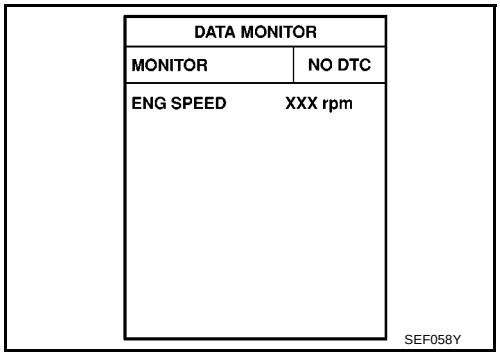

WITHOUT CONSULT-II

1. Start engine and let it idle for 1 second.
2. Turn ignition switch OFF, wait at least 10 seconds and then turn ON.
3. Perform Diagnostic Test Mode II (Self-diagnostic results) with ECM.
4. If DTC is detected, go to EC-1523, "Diagnostic Procedure" .

Wiring Diagram
LHD MODELS

BBS004R9

EC-APPS3-01

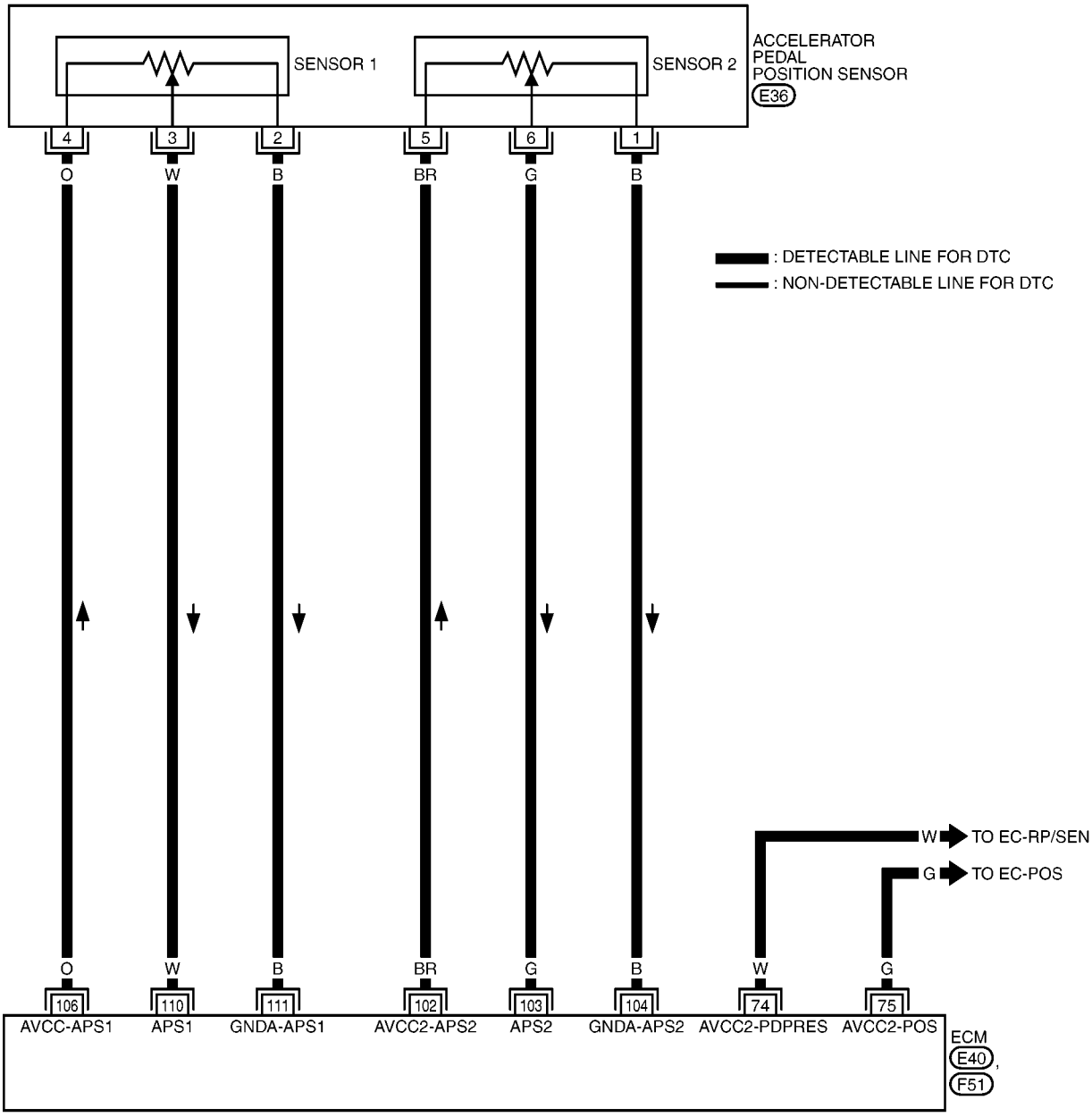

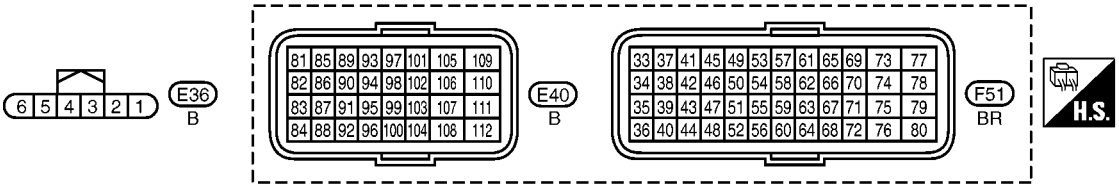

MBWA1487E

Specification data are reference values and are measured between each terminal and ground.

CAUTION:

Do not use ECM ground terminals when measuring input/output voltage. Doing so may result in damage to the ECM's transistor. Use a ground other than ECM terminals, such as the ground.

TERMINAL NO.	WIRE COLOR	ITEM	CONDITION	DATA (DC Voltage)
74	W	Sensor power supply (Refrigerant pressure sensor)	**[Ignition switch: ON]**	Approximately 5V
75	G	Sensor power supply [Crankshaft position sensor (POS)]	**[Ignition switch: ON]**	Approximately 5V
102	BR	Sensor power supply (APP sensor 2)	**[Ignition switch: ON]**	Approximately 5V
103	G	Accelerator pedal position sensor 2	**[Ignition switch: ON]** ● Engine stopped ● Accelerator pedal: Fully released	0.3 - 0.6V
			[Ignition switch: ON] ● Engine stopped ● Accelerator pedal: Fully depressed	1.95 - 2.4V
104	B	Sensor ground (APP sensor 2)	**[Engine is running]** ● **Warm-up condition** ● Idle speed	Approximately 0V
106	O	Sensor power supply (APP sensor 1)	**[Ignition switch: ON]**	Approximately 5V
110	W	Accelerator pedal position sensor 1	**[Ignition switch: ON]** ● Engine stopped ● Accelerator pedal: Fully released	0.6 - 0.9V
			[Ignition switch: ON] ● Engine stopped ● Accelerator pedal: Fully depressed	3.9 - 4.7V
111	B	Sensor ground (APP sensor 1)	**[Engine is running]** ● **Warm-up condition** ● Idle speed	Approximately 0V

RHD MODELS

EC-APPS3-02

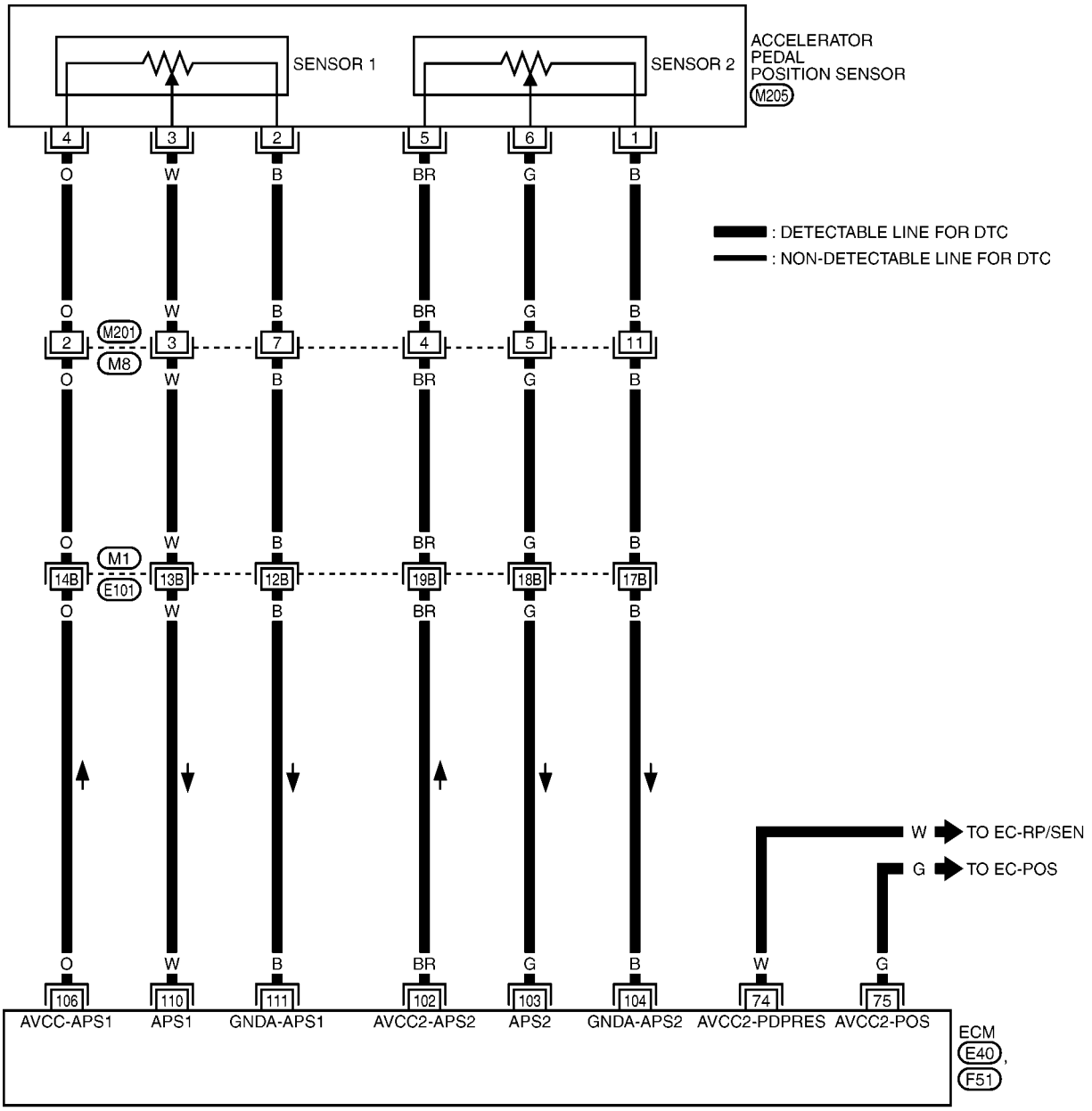

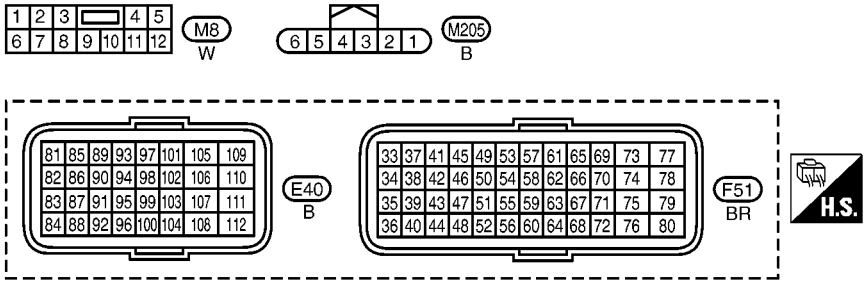

REFER TO THE FOLLOWING.
M1 - SUPER MULTIPLE JUNCTION (SMJ)

MBWA1488E

Specification data are reference values and are measured between each terminal and ground.

CAUTION:

Do not use ECM ground terminals when measuring input/output voltage. Doing so may result in damage to the ECM's transistor. Use a ground other than ECM terminals, such as the ground.

TERMINAL NO.	WIRE COLOR	ITEM	CONDITION	DATA (DC Voltage)
74	W	Sensor power supply (Refrigerant pressure sensor)	**[Ignition switch: ON]**	Approximately 5V
75	G	Sensor power supply [Crankshaft position sensor (POS)]	**[Ignition switch: ON]**	Approximately 5V
102	BR	Sensor power supply (APP sensor 2)	**[Ignition switch: ON]**	Approximately 5V
103	G	Accelerator pedal position sensor 2	**[Ignition switch: ON]** ● Engine stopped ● Accelerator pedal: Fully released	0.3 - 0.6V
			[Ignition switch: ON] ● Engine stopped ● Accelerator pedal: Fully depressed	1.95 - 2.4V
104	B	Sensor ground (APP sensor 2)	**[Engine is running]** ● **Warm-up condition** ● Idle speed	Approximately 0V
106	O	Sensor power supply (APP sensor 1)	**[Ignition switch: ON]**	Approximately 5V
110	W	Accelerator pedal position sensor 1	**[Ignition switch: ON]** ● Engine stopped ● Accelerator pedal: Fully released	0.6 - 0.9V
			[Ignition switch: ON] ● Engine stopped ● Accelerator pedal: Fully depressed	3.9 - 4.7V
111	B	Sensor ground (APP sensor 1)	**[Engine is running]** ● **Warm-up condition** ● Idle speed	Approximately 0V

Diagnostic Procedure

BBS004RA

1. CHECK GROUND CONNECTIONS

1. Turn ignition switch OFF.
2. Loosen and retighten ground screws on the body.
   Refer to EC-1342, "Ground Inspection" .

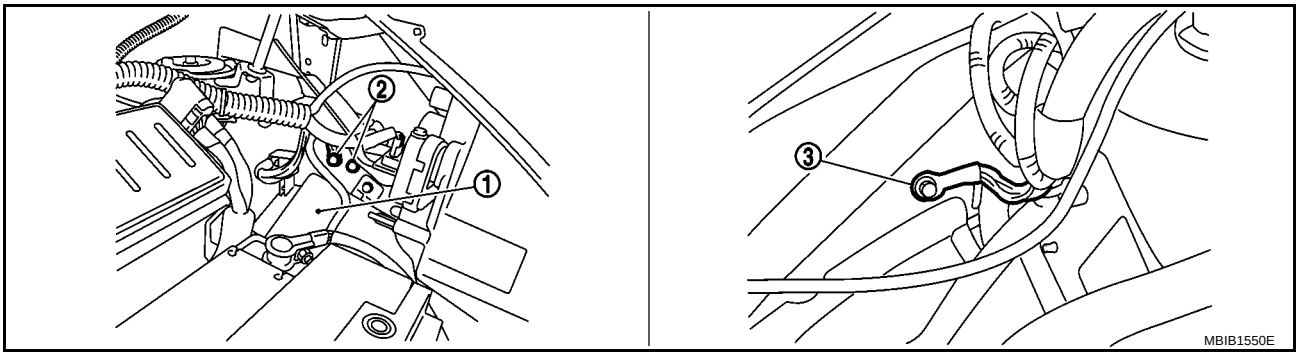

1. IPDM E/R
2. Body ground
3. Body ground

OK or NG

OK >> GO TO 2.
NG >> Repair or replace ground connections.

2. CHECK APP SENSOR 1 POWER SUPPLY CIRCUIT

1. Disconnect accelerator pedal position (APP) sensor harness connector (1).
   - Accelerator pedal position sensor (2)
   - Accelerator pedal (3)
2. Turn ignition switch ON.

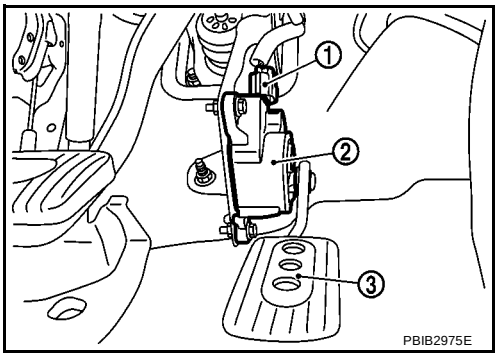

3. Check voltage between APP sensor terminal 4 and ground with CONSULT-II or tester.

   Voltage: Approximately 5V

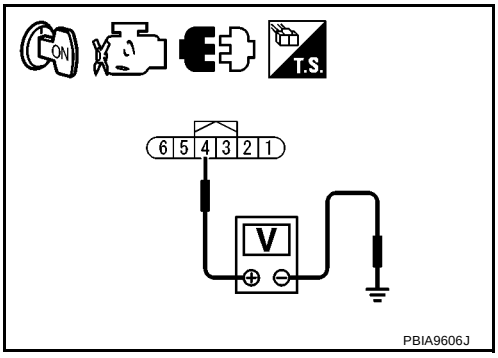

OK or NG

OK >> GO TO 4.
NG >> GO TO 3.

3. DETECT MALFUNCTIONING PART

Check the following.

- Harness connectors M201, M8 (RHD models)
- Harness connectors M1, E101 (RHD models)
- Harness for open or short between APP sensor and ECM

>> Repair open circuit or short to ground or short to power in harness or connectors.

4. CHECK APP SENSOR 2 POWER SUPPLY CIRCUIT-I

1. Turn ignition switch ON.
2. Check voltage between APP sensor terminal 5 and ground with CONSULT-II or tester.

Voltage: Approximately 5V

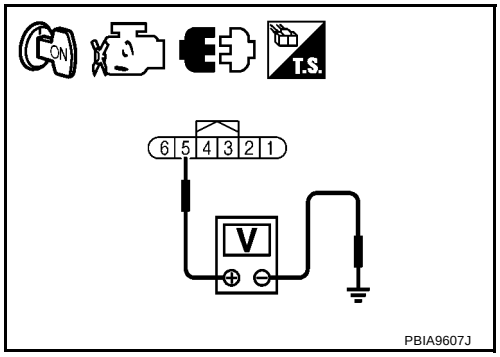

OK or NG

OK >> GO TO 9.
NG >> GO TO 5.

5. CHECK APP SENSOR 2 POWER SUPPLY CIRCUIT-II

1. Turn ignition switch OFF.
2. Disconnect ECM harness connector.
3. Check harness continuity between APP sensor terminal 5 and ECM terminal 102. Refer to Wiring Diagram.

Continuity should exist.

OK or NG

OK >> GO TO 7.
NG >> GO TO 6.

6. DETECT MALFUNCTIONING PART

Check the following.

- Harness connectors M201, M8 (RHD models)
- Harness connectors M1, E101 (RHD models)
- Harness for open between APP sensor and ECM

>> Repair open circuit in harness or connectors.

7. CHECK APP SENSOR 2 POWER SUPPLY CIRCUIT-III

Check harness for short to power and short to ground, between the following terminals.

ECM terminal	Sensor terminal	Reference Wiring Diagram
74	Refrigerant pressure sensor terminal 3	EC-1591, "Wiring Diagram"
75	Crankshaft position sensor (POS) terminal 1	EC-1407, "Wiring Diagram"
102	APP sensor terminal 5	EC-1519, "Wiring Diagram"

OK or NG

OK >> GO TO 8.
NG >> Repair short to ground or short to power in harness or connectors.

8. CHECK COMPONENTS

Check the following.

- Crankshaft position sensor (POS) (Refer to EC-1412, "Component Inspection" .)
- Refrigerant pressure sensor (Refer to ATC-85, "Refrigerant Pressure Sensor" .)

OK or NG

OK >> GO TO 15.
NG >> Replace malfunctioning component.

9. CHECK APP SENSOR GROUND CIRCUIT FOR OPEN AND SHORT

1. Turn ignition switch OFF.
2. Disconnect ECM harness connector.
3. Check harness continuity between ECM terminal 111 and APP sensor terminal 2, ECM terminal 104 and APP sensor terminal 1.
   Refer to Wiring Diagram.

   Continuity should exist.

4. Also check harness for short to ground and short to power.

OK or NG

OK >> GO TO 11.
NG >> GO TO 10.

10. DETECT MALFUNCTIONING PART

Check the following.

- Harness connectors M201, M8 (RHD models)
- Harness connectors M1, E101 (RHD models)
- Harness for open between APP sensor and ECM

>> Repair open circuit in harness or connectors.

11. CHECK APP SENSOR INPUT SIGNAL CIRCUIT FOR OPEN AND SHORT

1. Check harness continuity between ECM terminal 110 and APP sensor terminal 3, ECM terminal 103 and APP sensor terminal 6.
   Refer to Wiring Diagram.

   Continuity should exist.

2. Also check harness for short to ground and short to power.

OK or NG

OK >> GO TO 13.
NG >> GO TO 12.

12. DETECT MALFUNCTIONING PART

Check the following.

- Harness connectors M201, M8 (RHD models)
- Harness connectors M1, E101 (RHD models)
- Harness for open between APP sensor and ECM

>> Repair open circuit in harness or connectors.

13. CHECK APP SENSOR

Refer to EC-1527, "Component Inspection" .

OK or NG

OK >> GO TO 15.
NG >> GO TO 14.

14. REPLACE ACCELERATOR PEDAL ASSEMBLY

1. Replace accelerator pedal assembly.
2. Perform EC-1278, "Accelerator Pedal Released Position Learning" .
3. Perform EC-1279, "Throttle Valve Closed Position Learning" .
4. Perform EC-1277, "Idle Speed and Ignition Timing Check" .

>> **INSPECTION END**

15. CHECK INTERMITTENT INCIDENT

Refer to EC-1336, "TROUBLE DIAGNOSIS FOR INTERMITTENT INCIDENT" .

>> **INSPECTION END**

Component Inspection

BBS004RB

ACCELERATOR PEDAL POSITION SENSOR

1. Reconnect all harness connectors disconnected.
2. Turn ignition switch ON.
3. Check voltage between ECM terminals 110 (APP sensor 1 signal), 103 (APP sensor 2 signal) and ground under the following conditions.

Terminal	Accelerator pedal	Voltage
110 (Accelerator pedal position sensor 1)	Fully released	0.6 - 0.9V
	Fully depressed	3.9 - 4.7V
103 (Accelerator pedal position sensor 2)	Fully released	0.3 - 0.6V
	Fully depressed	1.95 - 2.4V

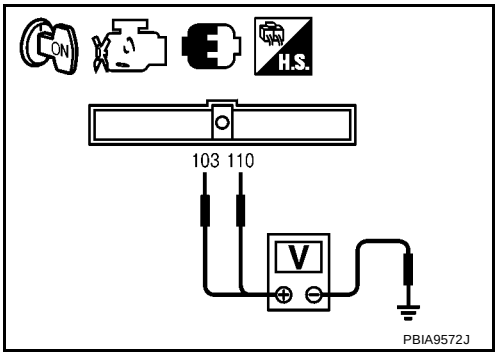

4. If NG, replace accelerator pedal assembly and go to next step.
5. Perform EC-1278, "Accelerator Pedal Released Position Learning" .
6. Perform EC-1279, "Throttle Valve Closed Position Learning" .
7. Perform EC-1279, "Idle Air Volume Learning" .

Removal and Installation

BBS004RC

ACCELERATOR PEDAL

Refer to ACC-2, "ACCELERATOR CONTROL SYSTEM" .

ELECTRICAL LOAD SIGNAL

PFP:25350

CONSULT-II Reference Value in Data Monitor Mode

BBS004RG

Specification data are reference values.

MONITOR ITEM	CONDITION		SPECIFICATION
LOAD SIGNAL	● Ignition switch: ON	Rear window defogger switch is ON and/or lighting switch is in 2nd position.	ON
		Rear window defogger switch is OFF and lighting switch is OFF.	OFF
HEATER FAN SW	● Ignition switch: ON	Heater fan is operating.	ON
		Heater fan is not operating.	OFF

Diagnostic Procedure

BBS004RH

1. CHECK LOAD SIGNAL CIRCUIT OVERALL FUNCITION-I

1. Turn ignition switch ON.
2. Check “LOAD SIGNAL” in “DATA MONITOR” mode with CONSULT-II under the following conditions.

Condition	LOAD SIGNAL
Lighting switch: ON at 2nd position	ON
Lighting switch: OFF	OFF

OK or NG

OK >> GO TO 2.
NG >> GO TO 4.

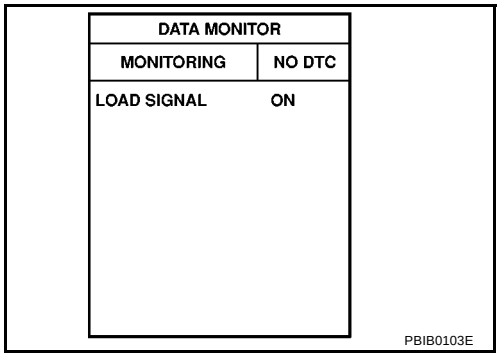

2. CHECK LOAD SIGNAL CIRCUIT OVERALL FUNCTION-II

Check “LOAD SIGNAL” in “DATA MONITOR” mode with CONSULT-II under the following conditions.

Condition	LOAD SIGNAL
Rear window defogger switch: ON	ON
Rear window defogger switch: OFF	OFF

OK or NG

OK >> GO TO 3.
NG >> GO TO 5.

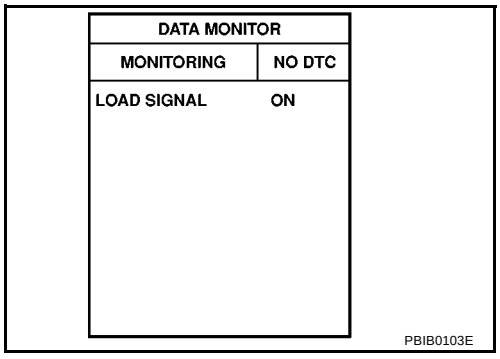

3. CHECK HEATER FAN SIGNAL CIRCUIT OVERALL FUNCTION

Check “HEATER FAN SW” in “DATA MONITOR” mode with CONSULT-II under the following conditions.

Condition	HEATER FAN SW
Heater fan control switch: ON	ON
Heater fan control switch: OFF	OFF

OK or NG

OK >> **INSPECTION END**.
NG >> GO TO 6.

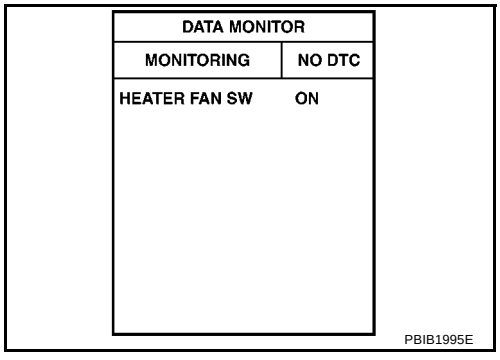

4. CHECK HEADLAMP SYSTEM

Refer to LT-7, "HEADLAMP -CONVENTIONAL TYPE-" or LT-35, "HEADLAMP - DAYTIME LIGHT SYSTEM - " .

>> **INSPECTION END**

5. CHECK REAR WINDOW DEFOGGER SYSTEM

Refer to GW-12, "REAR WINDOW DEFOGGER" .

>> **INSPECTION END**

6. CHECK HEATER FAN CONTROL SYSTEM

Refer to ATC-26, "TROUBLE DIAGNOSIS" (models with automatic air conditioner) or MTC-23, "TROUBLE DIAGNOSIS" (models with manual air conditioner).

>> **INSPECTION END**

EVAP CANISTER PURGE VOLUME CONTROL SOLENOID VALVE

PFP:14920

Description

BBS004RI

SYSTEM DESCRIPTION

Sensor	Input Signal to ECM	ECM function	Actuator
Crankshaft position sensor (POS) Camshaft position sensor (PHASE)	Engine speed*1	EVAP canister purge flow control	EVAP canister purge volume control solenoid valve
Mass air flow sensor	Amount of intake air		
Engine coolant temperature sensor	Engine coolant temperature		
Battery	Battery voltage*1		
Throttle position sensor	Throttle position		
Accelerator pedal position sensor	Accelerator pedal position		
Heated oxygen sensor 1	Density of oxygen in exhaust gas (Mixture ratio feedback signal)		
Wheel sensor	Vehicle speed*2		

*1: ECM determines the start signal status by the signals of engine speed and battery voltage.
*2: This signal is sent to the ECM through CAN communication line.

This system controls flow rate of fuel vapor from the EVAP canister. The opening of the vapor by-pass passage in the EVAP canister purge volume control solenoid valve changes to control the flow rate. The EVAP canister purge volume control solenoid valve repeats ON/OFF operation according to the signal sent from the ECM. The opening of the valve varies for optimum engine control. The optimum value stored in the ECM is determined by considering various engine conditions. When the engine is operating, the flow rate of fuel vapor from the EVAP canister is regulated as the air flow changes.

COMPONENT DESCRIPTION

The EVAP canister purge volume control solenoid valve uses a ON/OFF duty to control the flow rate of fuel vapor from the EVAP canister. The EVAP canister purge volume control solenoid valve is moved by ON/OFF pulses from the ECM. The longer the ON pulse, the greater the amount of fuel vapor that will flow through the valve.

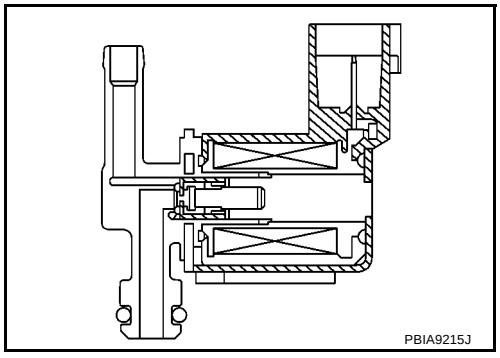

CONSULT-II Reference Value in Data Monitor Mode

BBS004RJ

Specification data are reference values.

MONITOR ITEM	CONDITION		SPECIFICATION
PURG VOL C/V	● Engine: After warming up ● Shift lever: P or N (A/T), Neutral (M/T) ● Air conditioner switch: OFF ● No load	Idle	0%
		2,000 rpm	0 - 50%

Wiring Diagram

BBS004RK

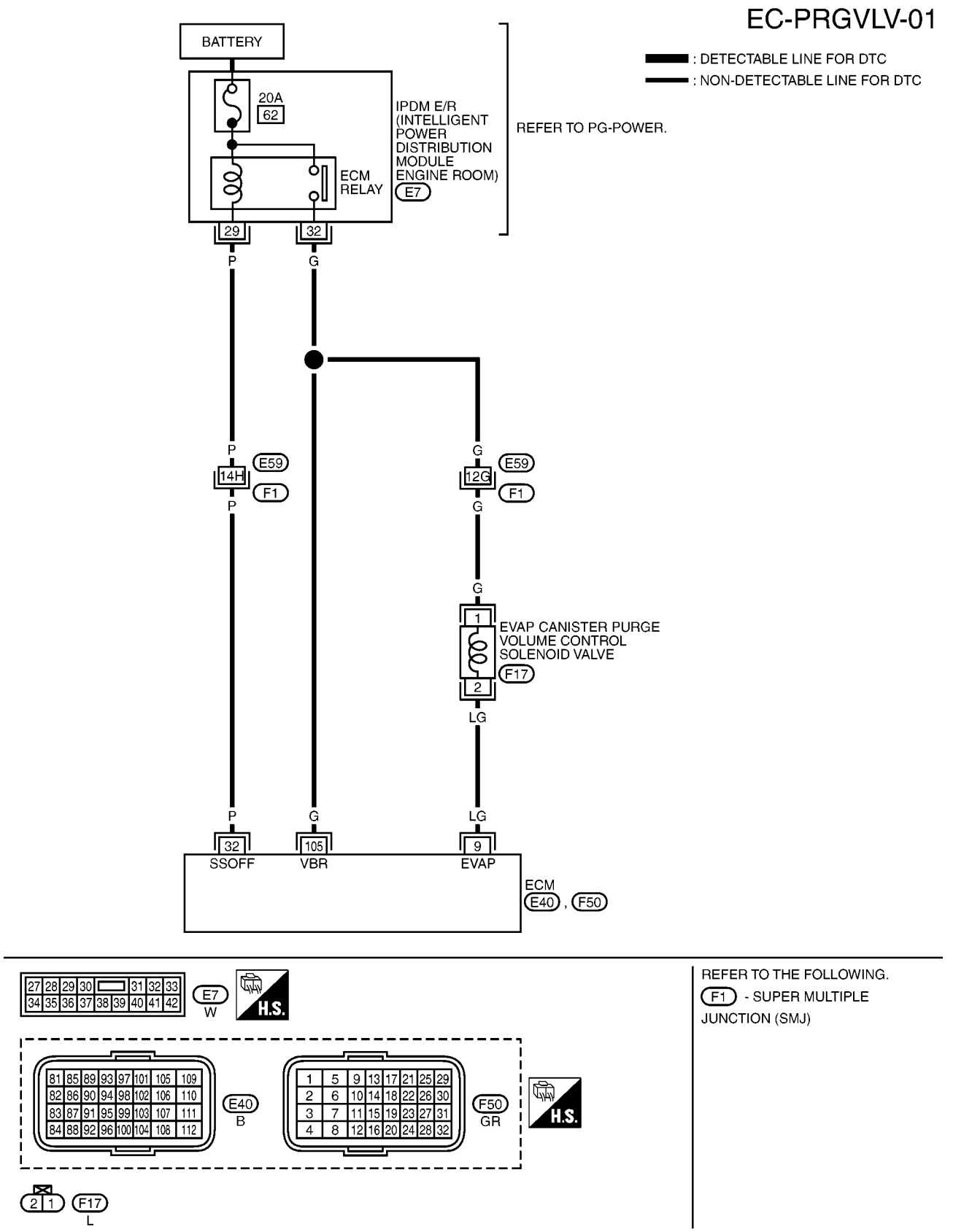

Specification data are reference values and are measured between each terminal and ground.
Pulse signal is measured by CONSULT-II.

CAUTION:

Do not use ECM ground terminals when measuring input/output voltage. Doing so may result in damage to the ECM's transistor. Use a ground other than ECM terminals, such as the ground.

TERMINAL NO.	WIRE COLOR	ITEM	CONDITION	DATA (DC Voltage)
9	LG	EVAP canister purge volume control solenoid valve	**[Engine is running]** ● Idle speed	BATTERY VOLTAGE (11 - 14V)★ 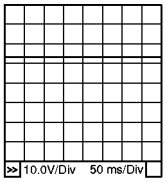 PBIB0050E
			[Engine is running] ● Engine speed: About 2,000 rpm (More than 100 seconds after starting engine) **NOTE:** **Voltage and Duty percent may vary.**	Approximately 10V★ 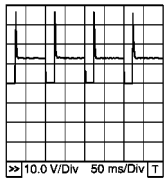 PBIB0520E
32	P	ECM relay (Self shut-off)	**[Engine is running]** **[Ignition switch: OFF]** ● For a few seconds after turning ignition switch OFF	0 - 1.0V
			[Ignition switch: OFF] ● More than a few seconds after turning ignition switch OFF	BATTERY VOLTAGE (11 - 14V)
105	G	Power supply for ECM	**[Ignition switch: ON]**	BATTERY VOLTAGE (11 - 14V)

★: Average voltage for pulse signal (Actual pulse signal can be confirmed by oscilloscope.)

Diagnostic Procedure

BBS004RL

1. CHECK OVERALL FUNCTION

With CONSULT-II

1. Turn ignition switch OFF.
2. Disconnect the EVAP purge hose (2) connected to the EVAP canister (1).
   - ⇦: Vehicle front
   - Illustration shows the view from under the vehicle.
3. Turn ignition switch ON.

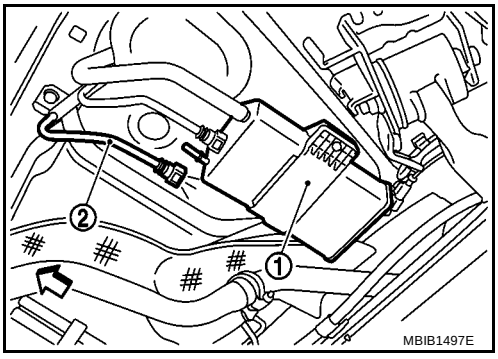

4. Select “PURG VOL CONT/V” in “ACTIVE TEST” mode with CONSULT-II.
5. Start engine and let it idle.
6. Change the valve opening percentage with touching “Qu” or “Qd” on CONSULT-II screen, and check for vacuum existence at the EVAP purge hose under the following conditions.

Conditions (PURG VOL CONT/V)	Vacuum
0%	Should not exist.
100%	Should exist.

ACTIVE TEST	
PURG VOL CONT/V	XXX %
MONITOR	
ENG SPEED	XXX rpm
A/F ALPHA-B1	XXX %
HO2S1 MNTR (B1)	LEAN

PBIB0569E

Without CONSULT-II

1. Turn ignition switch OFF.
2. Disconnect the EVAP purge hose (2) connected to the EVAP canister (1).
   - ⇦: Vehicle front
   - Illustration shows the view from under the vehicle.
3. Start engine and let it idle for at least 100 seconds.
4. Check for vacuum existence at the EVAP purge hose under the following conditions.

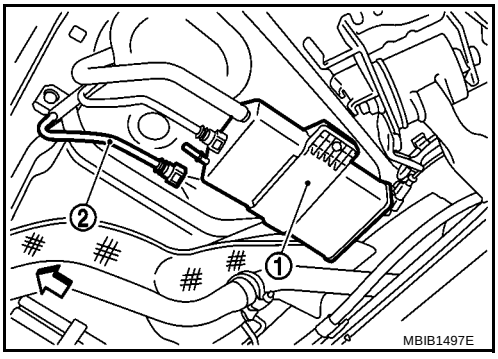

Conditions	Vacuum
At idle	Should not exist.
Engine speed: About 2,000 rpm	Should exist.

OK or NG

OK >> GO TO 2.
NG >> GO TO 3.

2. CHECK EVAP CANISTER

Refer to EC-1260, "EVAP CANISTER" .

OK or NG

OK >> **INSPECTION END**
NG >> Replace EVAP canister.

3. CHECK EVAP PURGE LINE

Check EVAP purge line (pipe, rubber tube, fuel tank and EVAP canister) for cracks or improper connection. Refer to EC-1258, "EVAPORATIVE EMISSION LINE DRAWING" .

OK or NG

OK >> GO TO 4.
NG >> Repair or reconnect the hose.

4. CHECK EVAP CANISTER PURGE VOLUME CONTROL SOLENOID VALVE POWER SUPPLY CIRCUIT

1. Turn ignition switch OFF.
2. Disconnect EVAP canister purge volume control solenoid valve (1) harness connector.

– ⇦: Vehicle front

3. Turn ignition switch ON.

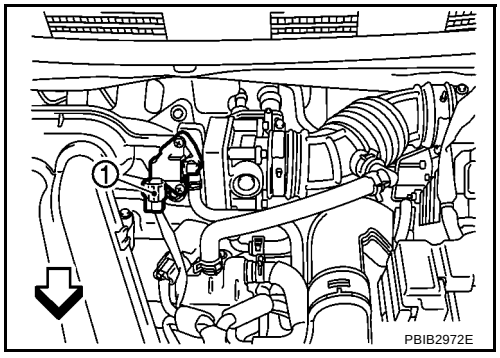

4. Check voltage between EVAP canister purge volume control solenoid valve terminal 1 and ground with CONSULT-II or tester.

Voltage: Battery voltage

OK or NG

OK >> GO TO 6.
NG >> GO TO 5.

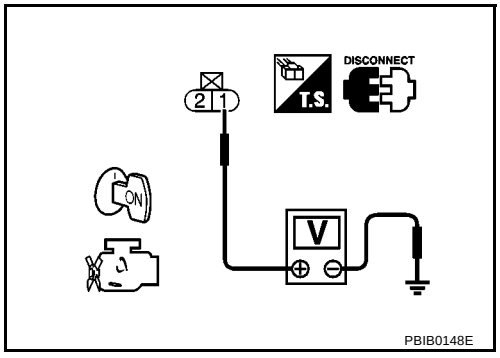

5. DETECT MALFUNCTIONING PART

Check the following.

- Harness connectors E59, F1
- Harness for open or short between EVAP canister purge volume control solenoid valve and IPDM E/R
- Harness for open or short between EVAP canister purge volume control solenoid valve and ECM

>> Repair open circuit or short to ground or short to power in harness or connectors.

6. CHECK EVAP CANISTER PURGE VOLUME CONTROL SOLENOID VALVE OUTPUT SIGNAL CIRCUIT FOR OPEN AND SHORT

1. Turn ignition switch OFF.
2. Disconnect ECM harness connector.
3. Check harness continuity between EVAP canister purge volume control solenoid valve terminal 2 and ECM terminal 9.
   Refer to Wiring Diagram.

   Continuity should exist.

4. Also check harness for short to ground and short to power.

OK or NG

OK (With CONSULT-II)>>GO TO 7.
OK (Without CONSULT-II)>>GO TO 8.
NG >> Repair open circuit or short to ground or short to power in harness or connectors.

7. CHECK EVAP CANISTER PURGE VOLUME CONTROL SOLENOID VALVE OPERATION

With CONSULT-II

1. Reconnect all harness connectors disconnected.
2. Start engine.
3. Perform “PURG VOL CONT/V” in “ACTIVE TEST” mode with CONSULT-II. Check that engine speed varies according to the valve opening.

ACTIVE TEST	
PURG VOL CONT/V	XXX %
MONITOR	
ENG SPEED	XXX rpm
A/F ALPHA-B1	XXX %
HO2S1 MNTR (B1)	LEAN

PBIB0569E

OK or NG

OK >> GO TO 9.
NG >> GO TO 8.

8. CHECK EVAP CANISTER PURGE VOLUME CONTROL SOLENOID VALVE

Refer to EC-1536, "Component Inspection" .

OK or NG

OK >> GO TO 9.
NG >> Replace EVAP canister purge volume control solenoid valve.

9. CHECK INTERMITTENT INCIDENT

Refer to EC-1336, "TROUBLE DIAGNOSIS FOR INTERMITTENT INCIDENT" .

>> **INSPECTION END**

Component Inspection

BBS004RM

EVAP CANISTER PURGE VOLUME CONTROL SOLENOID VALVE

With CONSULT-II

Check air passage continuity of EVAP canister purge volume control solenoid valve under the following conditions.

Condition (PURG VOL CONT/V value)	Air passage continuity between A and B
100%	Yes
0%	No

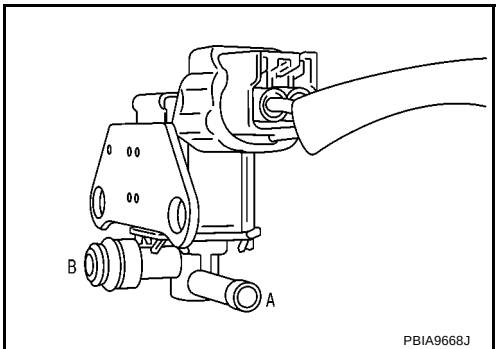

PBIA9668J

Without CONSULT-II

Check air passage continuity of EVAP canister purge volume control solenoid valve under the following conditions.

Condition	Air passage continuity between A and B
12V direct current supply between terminals 1 and 2	Yes
No supply	No

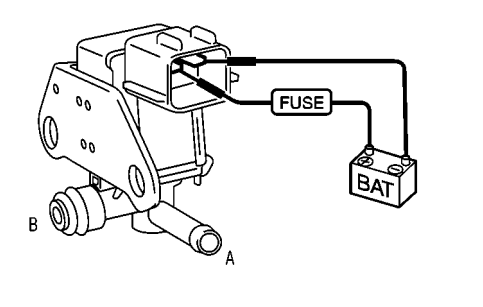

PBIA9560J

Removal and Installation

BBS004RN

EVAP CANISTER PURGE VOLUME CONTROL SOLENOID VALVE

Refer to EM-120, "INTAKE MANIFOLD" .

FUEL INJECTOR

PFP:16600

Component Description

BBS004RO

The fuel injector is a small, precise solenoid valve. When the ECM supplies a ground to the fuel injector circuit, the coil in the fuel injector is energized. The energized coil pulls the ball valve back and allows fuel to flow through the fuel injector into the intake manifold. The amount of fuel injected depends upon the injection pulse duration. Pulse duration is the length of time the fuel injector remains open. The ECM controls the injection pulse duration based on engine fuel needs.

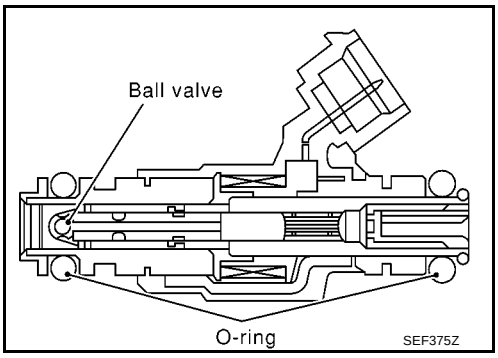

CONSULT-II Reference Value in Data Monitor Mode

BBS004RP

Specification data are reference values.

MONITOR ITEM	CONDITION		SPECIFICATION
B/FUEL SCHDL	See EC-1326, "TROUBLE DIAGNOSIS - SPECIFICATION VALUE" .		
INJ PULSE-B1	● Engine: After warming up ● Air conditioner switch: OFF ● Shift lever: P or N (A/T), Neutral (M/T) ● No load	Idle	2.0 - 3.0 msec
		2,000 rpm	1.9 - 2.9 msec

Wiring Diagram

BBS004RQ

EC-INJECT-01

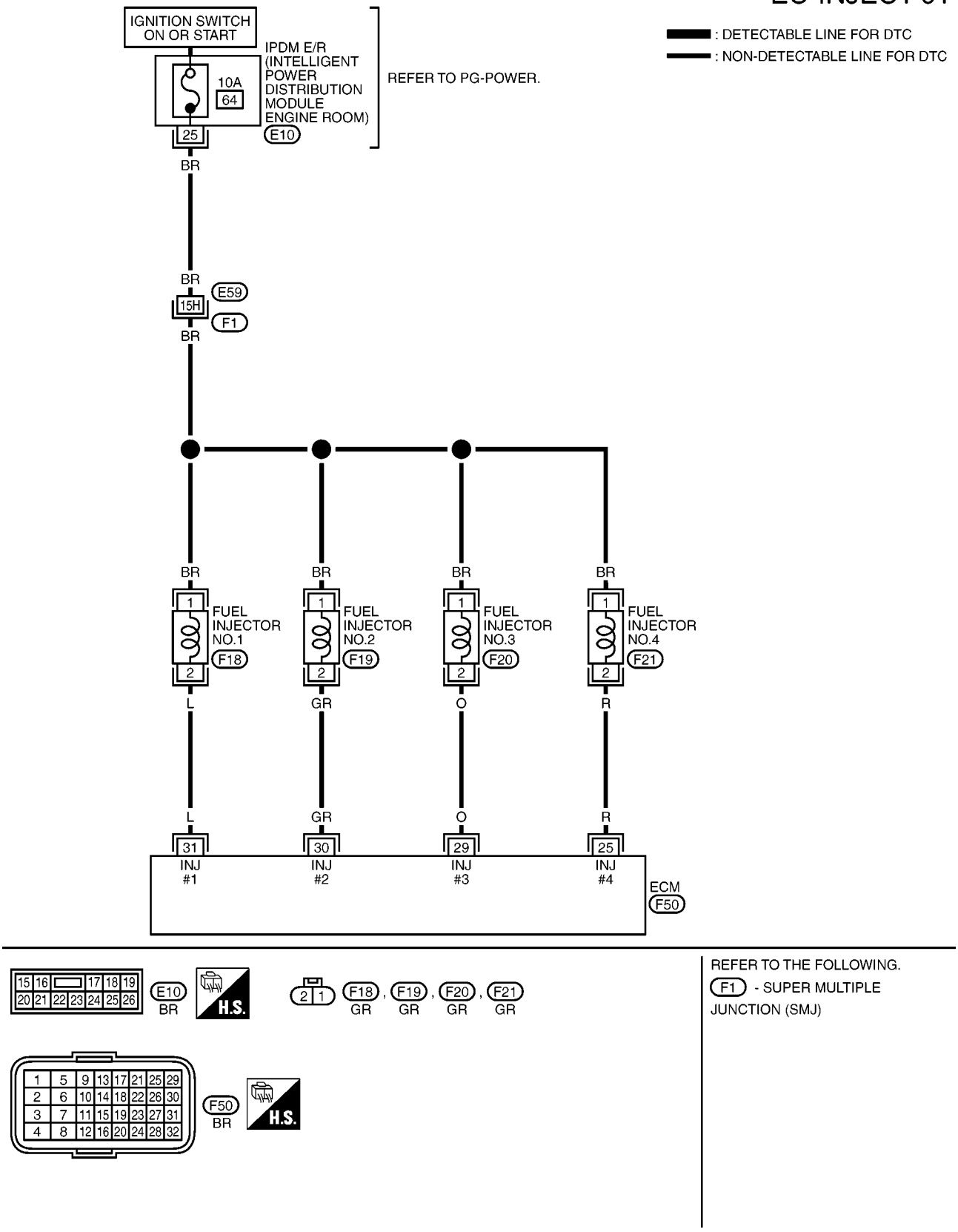

MBWA1489E

Specification data are reference values and are measured between each terminal and ground.
Pulse signal is measured by CONSULT-II.

CAUTION:
Do not use ECM ground terminals when measuring input/output voltage. Doing so may result in damage to the ECM's transistor. Use a ground other than ECM terminals, such as the ground.

TERMINAL NO.	WIRE COLOR	ITEM	CONDITION	DATA (DC Voltage)
25 29 30 31	R O GR L	Fuel injector No. 4 Fuel injector No. 3 Fuel injector No. 2 Fuel injector No. 1	**[Engine is running]** ● **Warm-up condition** ● Idle speed **NOTE:** The pulse cycle changes depending on rpm at idle	BATTERY VOLTAGE (11 - 14V)★ 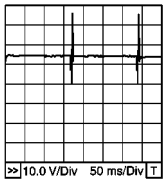 PBIB0529E
			[Engine is running] ● **Warm-up condition** ● Engine speed: 2,000 rpm	BATTERY VOLTAGE (11 - 14V)★ 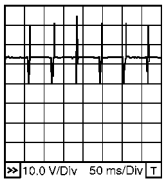 PBIA4943J

★: Average voltage for pulse signal (Actual pulse signal can be confirmed by oscilloscope.)

Diagnostic Procedure

BBS004RR

1. INSPECTION START

Turn ignition switch to START.
Is any cylinder ignited?

Yes or No

Yes >> GO TO 2.
No >> GO TO 3.

2. CHECK OVERALL FUNCTION

With CONSULT-II

1. Start engine.
2. Perform “POWER BALANCE” in “ACTIVE TEST” mode with CONSULT-II.
3. Make sure that each circuit produces a momentary engine speed drop.

ACTIVE TEST	
POWER BALANCE	
MONITOR	
ENG SPEED	XXX rpm
MAS A/F SE-B1	XXX V

PBIB0133E

Without CONSULT-II

1. Start engine.
2. Listen to each fuel injector operating sound.

   Clicking noise should be heard.

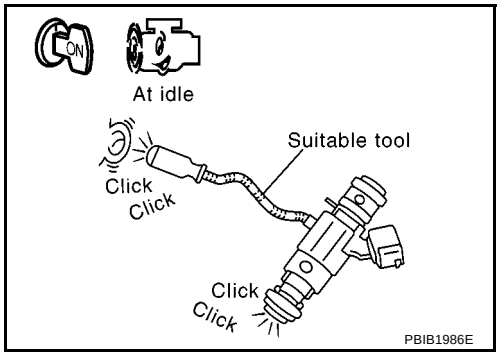

OK or NG

OK >> **INSPECTION END**
NG >> GO TO 3.

3. CHECK FUEL INJECTOR POWER SUPPLY CIRCUIT

1. Turn ignition switch OFF.
2. Disconnect fuel injector (2) harness connector.
- Ignition coil (1)
3. Turn ignition switch ON.

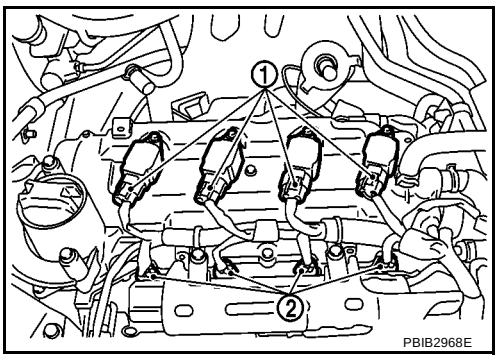

4. Check voltage between fuel injector terminal 1 and ground with CONSULT-II or tester.

Voltage: Battery voltage

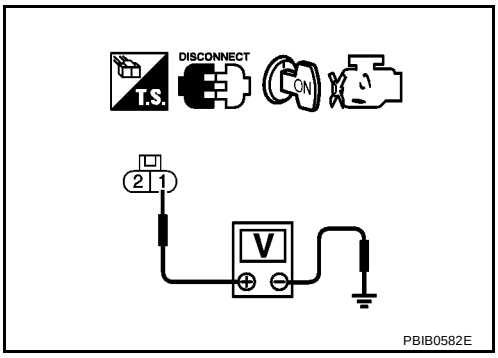

OK or NG

OK >> GO TO 5.
NG >> GO TO 4.

4. DETECT MALFUNCTIONING PART

Check the following.

- Harness connectors E59, F1
- IPDM E/R harness connector E10
- 10A fuse
- Harness for open or short between fuel injector and fuse

>> Repair open circuit or short to ground or short to power in harness or connectors.

5. CHECK FUEL INJECTOR OUTPUT SIGNAL CIRCUIT FOR OPEN AND SHORT

1. Turn ignition switch OFF.
2. Disconnect ECM harness connector.
3. Check harness continuity between fuel injector terminal 2 and ECM terminals 25, 29, 30, 31. Refer to Wiring Diagram.

Continuity should exist.

4. Also check harness for short to ground and short to power.

OK or NG

OK >> GO TO 6.
NG >> Repair open circuit or short to ground or short to power in harness or connectors.

6. CHECK FUEL INJECTOR

Refer to EC-1542, "Component Inspection" .

OK or NG

OK >> GO TO 7.
NG >> Replace fuel injector.

7. CHECK INTERMITTENT INCIDENT

Refer to EC-1336, "TROUBLE DIAGNOSIS FOR INTERMITTENT INCIDENT" .

>> **INSPECTION END**

Component Inspection

BBS004RS

FUEL INJECTOR

1. Disconnect fuel injector harness connector.
2. Check resistance between terminals as shown in the figure.

Resistance: 11.1 - 14.5Ω [at 10 - 60°C (50 - 140°F)]

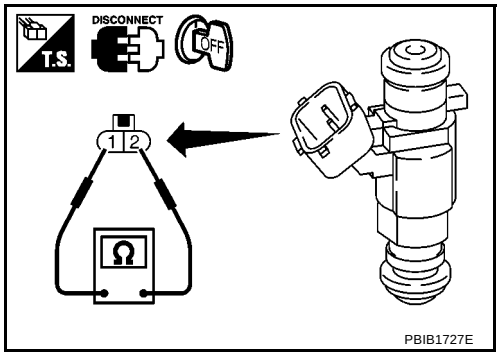

Removal and Installation

BBS004RT

FUEL INJECTOR

Refer to EM-135, "FUEL INJECTOR AND FUEL TUBE" .

FUEL PUMP

PFP:17042

Description

BBS004RU

SYSTEM DESCRIPTION

Sensor	Input Signal to ECM	ECM Function	Actuator
Crankshaft position sensor (POS) Camshaft position sensor (PHASE)	Engine speed*	Fuel pump control	Fuel pump relay
Battery	Battery voltage*		

*: ECM determines the start signal status by the signals of engine speed and battery voltage.

The ECM activates the fuel pump for several seconds after the ignition switch is turned ON to improve engine startability. If the ECM receives a engine speed signal from the crankshaft position sensor (POS) and camshaft position sensor (PHASE), it knows that the engine is rotating, and causes the pump to operate. If the engine speed signal is not received when the ignition switch is ON, the engine stalls. The ECM stops pump operation and prevents battery discharging, thereby improving safety. The ECM does not directly drive the fuel pump. It controls the ON/OFF fuel pump relay, which in turn controls the fuel pump.

Condition	Fuel pump operation
Ignition switch is turned to ON	Operates for 1 second
Engine running and cranking	Operates
When engine is stopped	Stops in 1.5 seconds
Except as shown above	Stops

COMPONENT DESCRIPTION

A turbine type design fuel pump is used in the fuel tank.

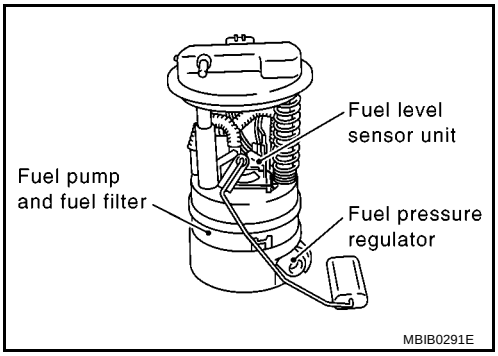

CONSULT-II Reference Value in Data Monitor Mode

BBS004RV

Specification data are reference values.

MONITOR ITEM	CONDITION	SPECIFICATION
FUEL PUMP RLY	● For 1 second after turning ignition switch ON ● Engine running or cranking	ON
	● Except above conditions	OFF

Wiring Diagram

BBS004RW

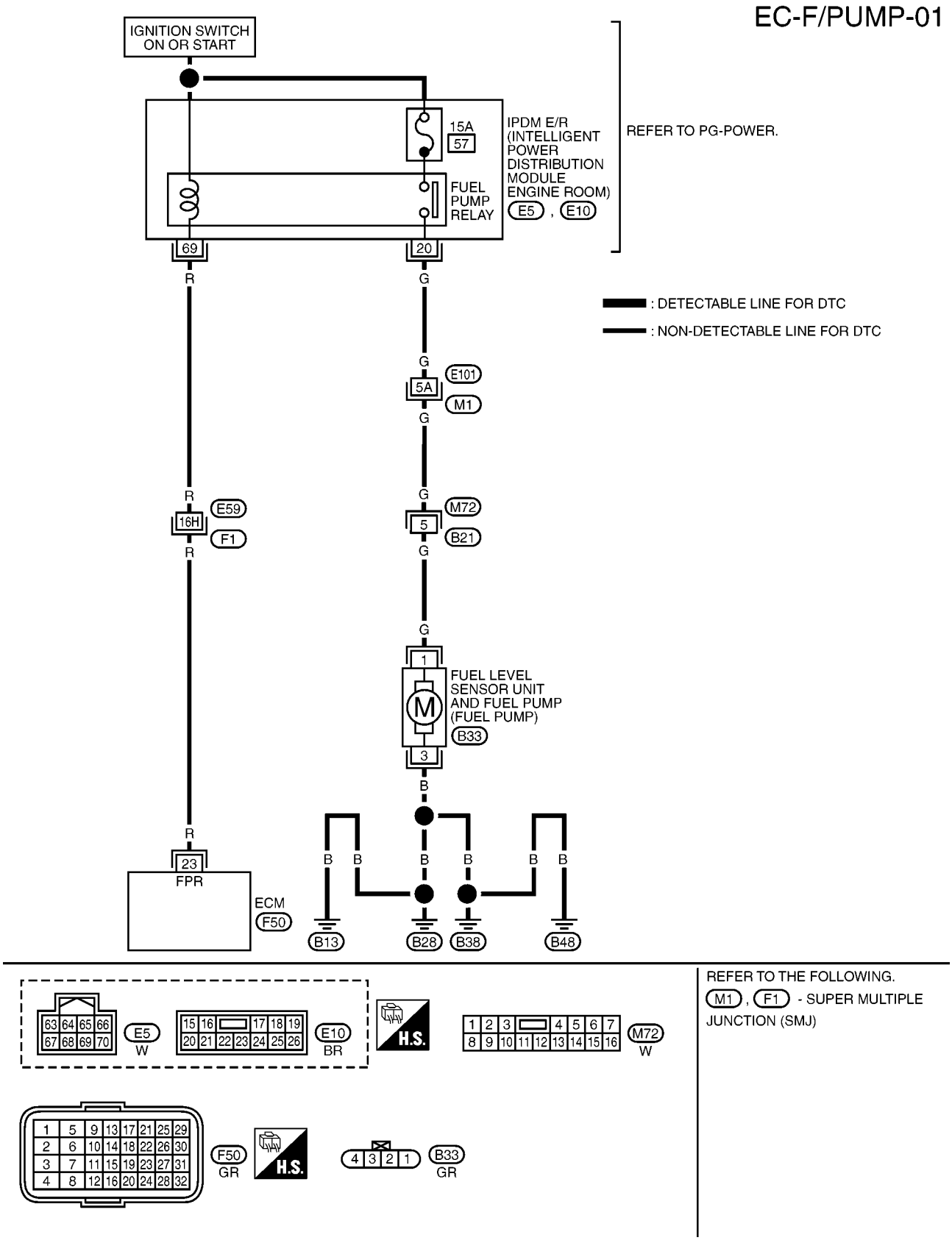

Specification data are reference values and are measured between each terminal and ground.

CAUTION:
Do not use ECM ground terminals when measuring input/output voltage. Doing so may result in damage to the ECM's transistor. Use a ground other than ECM terminals, such as the ground.

TERMINAL NO.	WIRE COLOR	ITEM	CONDITION	DATA (DC Voltage)
23	R	Fuel pump relay	**[Ignition switch: ON]** ● For 1 second after turning ignition switch ON **[Engine is running]**	0 - 1.0V
			[Ignition switch: ON] ● More than 1 second after turning ignition switch ON	BATTERY VOLTAGE (11 - 14V)

Diagnostic Procedure

BBS004RX

1. CHECK OVERALL FUNCTION

1. Turn ignition switch ON.
2. Pinch fuel feed hose (1) with two fingers.

– Illustration shows the view with intake air duct removed.

Fuel pressure pulsation should be felt on the fuel feed hose for 1 second after ignition switch is turned ON.

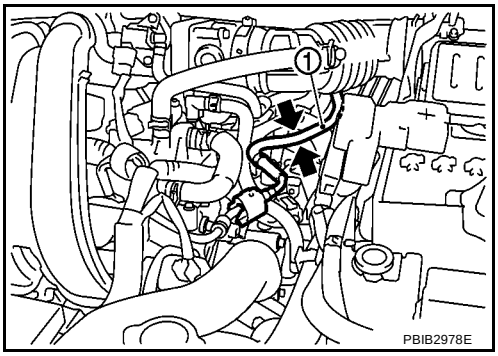

OK or NG

OK >> **INSPECTION END**
NG >> GO TO 2.

2. CHECK FUEL PUMP POWER SUPPLY CIRCUIT-I

1. Turn ignition switch OFF.
2. Disconnect ECM harness connector.
3. Turn ignition switch ON.
4. Check voltage between ECM terminal 23 and ground with CONSULT-II or tester.

Voltage: Battery voltage

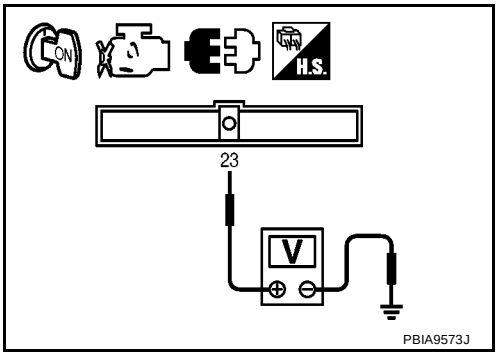

OK or NG

OK >> GO TO 5.
NG >> GO TO 3.

3. CHECK FUEL PUMP POWER SUPPLY CIRCUIT-II

1. Turn ignition switch OFF.
2. Disconnect IPDM E/R harness connector E5.
3. Check harness continuity between ECM terminal 23 and IPDM E/R terminal 69.
   Refer to Wiring Diagram.

   Continuity should exist.

4. Also check harness for short to ground and short to power.

OK or NG

OK >> GO TO 11.
NG >> GO TO 4.

4. DETECT MALFUNCTIONING PART

Check the following.

- Harness or connectors E59, F1
- Harness for open or short between IPDM E/R and ECM

>> Repair harness or connectors.

5. CHECK FUEL PUMP POWER SUPPLY CIRCUIT-III

1. Turn ignition switch OFF.
2. Reconnect all harness connectors disconnected.
3. Disconnect “fuel level sensor unit and fuel pump” harness connector.
4. Turn ignition switch ON.

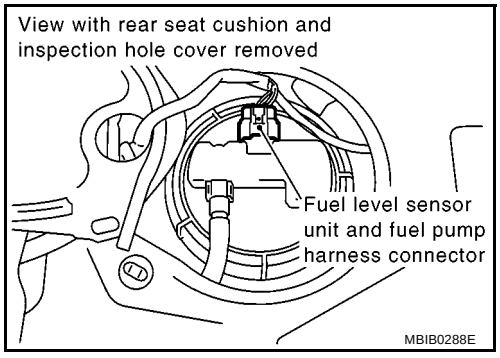

5. Check voltage between “fuel level sensor unit and fuel pump” terminal 1 and ground with CONSULT-II or tester.

   Voltage: Battery voltage should exist for 1 second after ignition switch is turned ON.

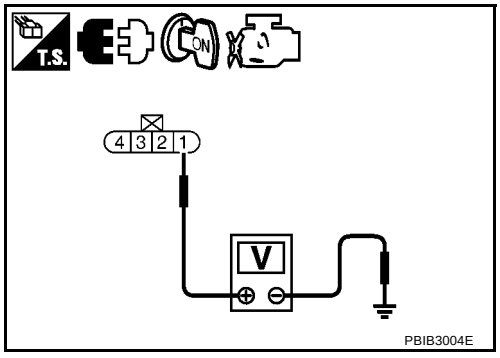

OK or NG

OK >> GO TO 9.
NG >> GO TO 6.

6. CHECK 15A FUSE

1. Turn ignition switch OFF.
2. Disconnect 15A fuse.
3. Check 15A fuse.

OK or NG

OK >> GO TO 7.
NG >> Replace fuse.

7. CHECK FUEL PUMP POWER SUPPLY CIRCUIT-IV

1. Disconnect IPDM E/R harness connector E10.
2. Check harness continuity between IPDM E/R terminal 20 and “fuel level sensor unit and fuel pump” terminal 1.
   Refer to Wiring Diagram.

   Continuity should exist.

3. Also check harness for short to ground and short to power.

OK or NG

OK >> GO TO 11.
NG >> GO TO 8.

8. DETECT MALFUNCTIONING PART

Check the following.

- Harness or connectors M1, E101
- Harness or connectors M72, B21
- Harness for open or short between IPDM E/R and “fuel level sensor unit and fuel pump”

>> Repair harness or connectors.

9. CHECK FUEL PUMP GROUND CIRCUIT

1. Check harness continuity between “fuel level sensor unit and fuel pump” terminal 3 and ground.
   Refer to Wiring Diagram.

   Continuity should exist.

2. Also check harness for short to power.

OK or NG

OK >> GO TO 10.
NG >> Repair or replace harness or connectors.

10. CHECK FUEL PUMP

Refer to EC-1548, "Component Inspection" .

OK or NG

OK >> GO TO 11.
NG >> Replace “fuel level sensor unit and fuel pump”.

11. CHECK INTERMITTENT INCIDENT

Refer to EC-1336, "TROUBLE DIAGNOSIS FOR INTERMITTENT INCIDENT" .

OK or NG

OK >> Replace IPDM E/R. Refer to PG-18, "IPDM E/R (INTELLIGENT POWER DISTRIBUTION MODULE ENGINE ROOM)" .
NG >> Repair or replace harness or connectors.

Component Inspection

BBS004RY

FUEL PUMP

1. Disconnect “fuel level sensor unit and fuel pump” harness connector.
2. Check resistance between “fuel level sensor unit and fuel pump” terminals 1 and 3.

Resistance: Approximately 0.2 - 5.0Ω [at 25°C (77°F)]

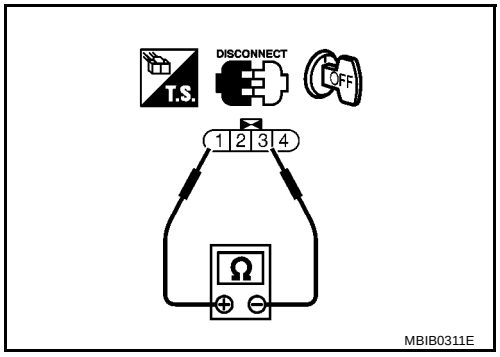

Removal and Installation

BBS004RZ

FUEL PUMP

Refer to FL-15, "FUEL LEVEL SENSOR UNIT, FUEL FILTER AND FUEL PUMP ASSEMBLY" .

HO2S1

PFP:22690

Component Description

BBS004S0

The heated oxygen sensor 1 is placed into the exhaust manifold. It detects the amount of oxygen in the exhaust gas compared to the outside air. The heated oxygen sensor 1 has a closed-end tube made of ceramic zirconia. The zirconia generates voltage from approximately 1V in richer conditions to 0V in leaner conditions. The heated oxygen sensor 1 signal is sent to the ECM. The ECM adjusts the injection pulse duration to achieve the ideal air-fuel ratio. The ideal air-fuel ratio occurs near the radical change from 1V to 0V.

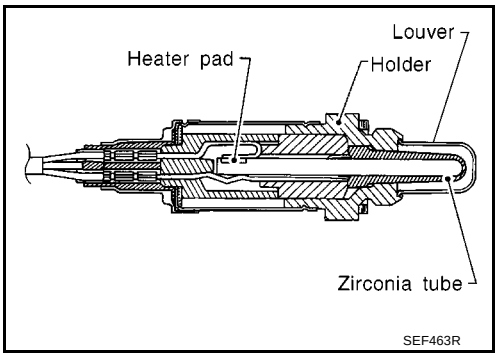

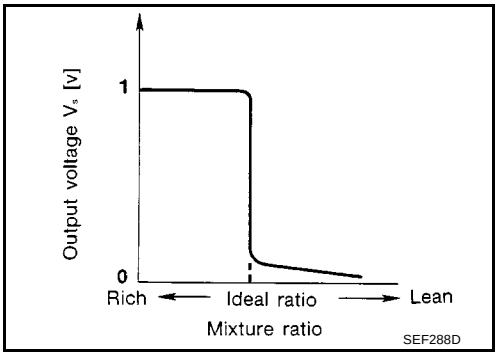

CONSULT-II Reference Value in Data Monitor Mode

BBS004S1

Specification data are reference values.

MONITOR ITEM	CONDITION		SPECIFICATION
HO2S1 (B1)	● Engine: After warming up	Maintaining engine speed at 2,000 rpm	0 - 0.3V ←→ Approx. 0.6 - 1.0V
HO2S1 MNTR (B1)			LEAN ←→ RICH Changes more than 5 times during 10 seconds.

Wiring Diagram

BBS004S2

EC-FRO2-01

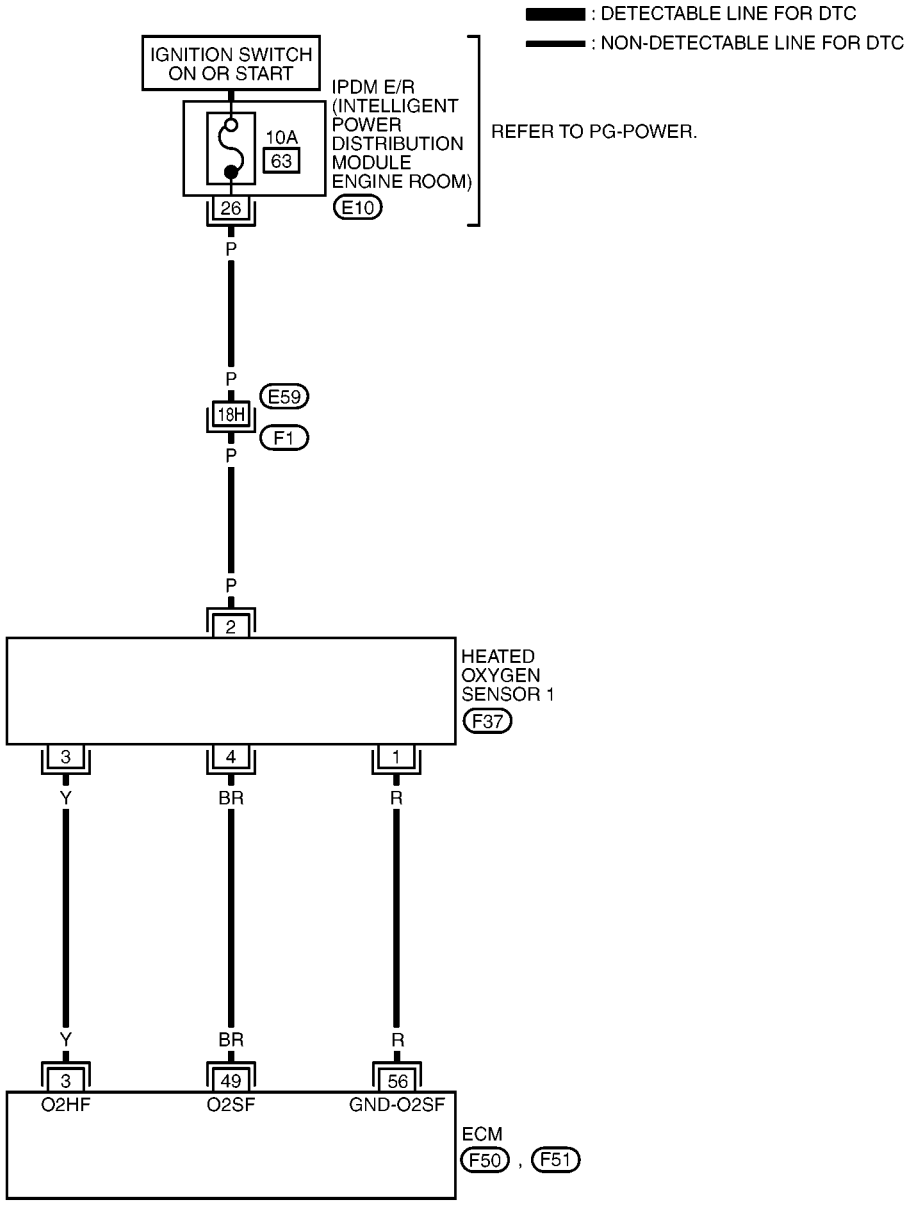

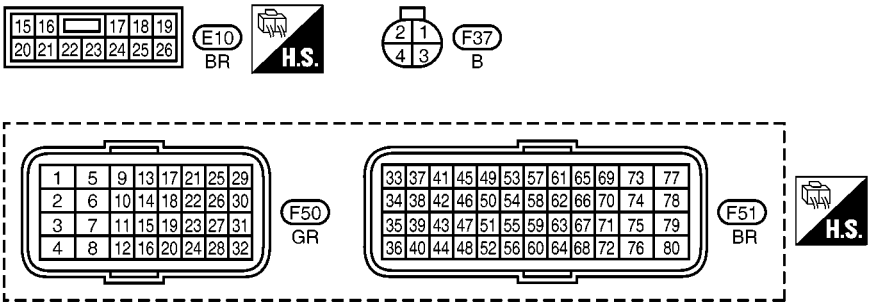

REFER TO THE FOLLOWING.
F1 - SUPER MULTIPLE JUNCTION (SMJ)

MBWA1497E

Specification data are reference values and are measured between each terminal and ground.
Pulse signal is measured by CONSULT-II.

CAUTION:
Do not use ECM ground terminals when measuring input/output voltage. Doing so may result in damage to the ECM's transistor. Use a ground other than ECM terminals, such as the ground.

TERMINAL NO.	WIRE COLOR	ITEM	CONDITION	DATA (DC Voltage)
3	Y	Heated oxygen sensor 1 heater	**[Engine is running]** ● **Warm-up condition** ● Engine speed: Below 3,600 rpm	Approximately 10V★ 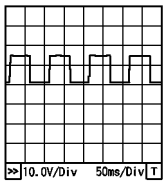 PBIA8148J
			[Ignition switch: ON] ● Engine stopped **[Engine is running]** ● Engine speed: Above 3,600 rpm	BATTERY VOLTAGE (11 - 14V)
49	BR	Heated oxygen sensor 1	**[Engine is running]** ● **Warm-up condition** ● Engine speed: 2,000 rpm	0 - Approximately 1.0V (Periodically change)
56	R	Sensor ground (Heated oxygen sensor 1)	**[Engine is running]** ● Idle speed	Approximately 0V

★: Average voltage for pulse signal (Actual pulse signal can be confirmed by oscilloscope.)

Diagnostic Procedure

BBS004S3

1. CHECK OVERALL FUNCTION

With CONSULT-II

1. Start engine and warm it up to normal operating temperature.
2. Select “HO2S1 MNTR (B1)” in “DATA MONITOR” mode with CONSULT-II.
3. Keep the engine speed at 2,000 rpm under no load, and make sure that the monitors fluctuates between LEAN and RICH more than five times in 10 seconds.

   1 time: RICH → LEAN → RICH

   2 times: RICH → LEAN → RICH → LEAN →RICH

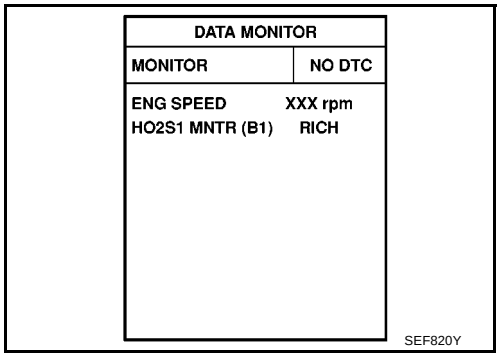

Without CONSULT-II

1. Start engine and warm it up to normal operating temperature.
2. Stop engine and wait at least 10 seconds.
3. Set ECM in Diagnostic test mode - II (Heated oxygen sensor 1 monitor).
   Refer to EC-1269, "HOW TO SWITCH DIAGNOSTIC TEST MODE" .
4. Keep the engine speed at 2,000 rpm under no load, and make sure that the MI comes ON more than five times in 10 seconds.

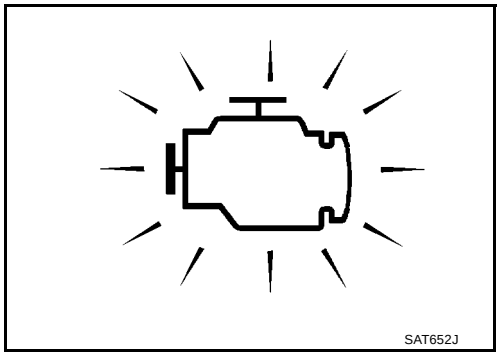

OK or NG

OK >> **INSPECTION END**
NG >> GO TO 2.

2. CHECK GROUND CONNECTIONS

1. Turn ignition switch OFF.
2. Loosen and retighten ground screws on the body.
   Refer to EC-1342, "Ground Inspection" .

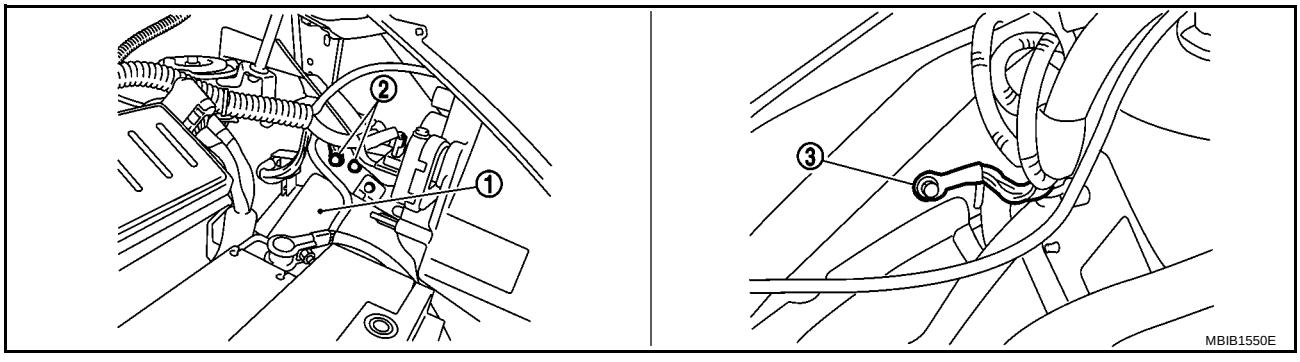

1. IPDM E/R
2. Body ground
3. Body ground

OK or NG

OK >> GO TO 3.
NG >> Repair or replace ground connections.

3. RETIGHTEN HEATED OXYGEN SENSOR 1

Loosen and retighten heated oxygen sensor 1.

- ⇦: Vehicle front
- Exhaust manifold (2)

Tightening torque: 50 N·m (5.1 kg-m, 37 ft-lb)

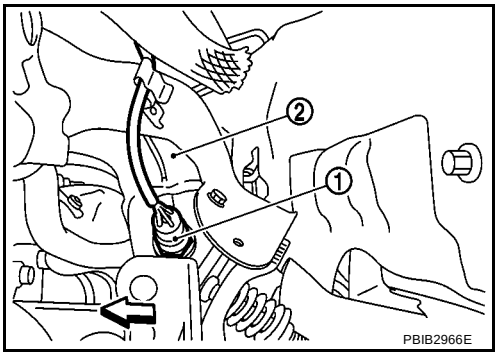

>> GO TO 4.

4. CHECK FOR EXHAUST GAS LEAK

1. Start engine and run it at idle.
2. Listen for an exhaust gas leak before three way catalyst (Manifold).

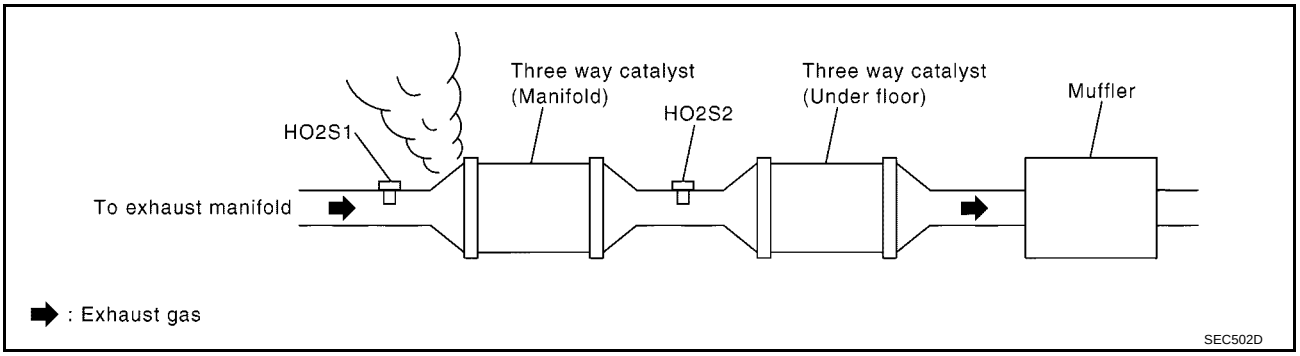

OK or NG

OK >> GO TO 5.
NG >> Repair or replace.

5. CHECK FOR INTAKE AIR LEAK

Listen for an intake air leak after the mass air flow sensor.

OK or NG

OK >> GO TO 6.
NG >> Repair or replace.

6. CHECK HO2S1 GROUND CIRCUIT FOR OPEN AND SHORT

1. Turn ignition switch OFF.
2. Disconnect heated oxygen sensor 1 harness connector (1).

– ⇦: Vehicle front

3. Disconnect ECM harness connector.
4. Check harness continuity between ECM terminal 56 and HO2S1 terminal 1.
   Refer to Wiring Diagram.

   Continuity should exist.

5. Also check harness for short to ground and short to power.

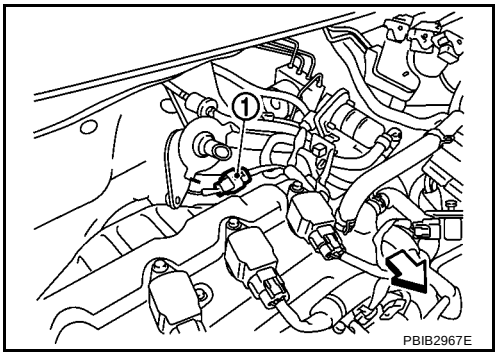

OK or NG

OK >> GO TO 7.
NG >> Repair open circuit or short to ground or short to power in harness or connectors.

7. CHECK HO2S1 INPUT SIGNAL CIRCUIT FOR OPEN AND SHORT

1. Check harness continuity between ECM terminal 49 and HO2S1 terminal 4.
   Refer to Wiring Diagram.

   Continuity should exist.

2. Check harness continuity between ECM terminal 49 or HO2S1 terminal 4 and ground.
   Refer to Wiring Diagram.

   Continuity should not exist.

3. Also check harness for short to power.

OK or NG

OK >> GO TO 8.
NG >> Repair open circuit or short to ground or short to power in harness or connectors.

8. CHECK MASS AIR FLOW SENSOR

Refer to EC-1359, "Component Inspection" .

OK or NG

OK >> GO TO 9.
NG >> Replace mass air flow sensor.

9. CHECK PCV VALVE

Refer to EC-1262, "Component Inspection" .

OK or NG

OK >> GO TO 10.
NG >> Replace PCV valve.

10. CHECK HEATED OXYGEN SENSOR 1

Refer to EC-1555, "Component Inspection" .

OK or NG

OK >> GO TO 11.
NG >> Replace heated oxygen sensor 1.

11. CHECK INTERMITTENT INCIDENT

Refer to EC-1336, "TROUBLE DIAGNOSIS FOR INTERMITTENT INCIDENT" .

>> **INSPECTION END**

Component Inspection

BBS004S4

HEATED OXYGEN SENSOR 1

With CONSULT-II

1. Start engine and warm it up to normal operating temperature.
2. Select “MANU TRIG” and adjust “TRIGGER POINT” to 100% in “DATA MONITOR” mode with CONSULT-II.
3. Select “HO2S1 (B1)” and “HO2S1 MNTR (B1)”.
4. Hold engine speed at 2,000 rpm under no load during the following steps.
5. Touch “RECORD” on CONSULT-II screen.

DATA MONITOR	
MONITOR	NO DTC
ENG SPEED	XXX rpm
MAS A/F SE-B1	XXX V
COOLAN TEMP/S	XXX °C
HO2S1 (B1)	XXX V
HO2S1 MNTR (B1)	LEAN

SEF646Y

6. Check the following.
   - “HO2S1 MNTR (B1)” in “DATA MONITOR” mode changes from “RICH” to “LEAN” to “RICH” more than 5 times in 10 seconds.
     5 times (cycles) are counted as shown at right.
   - “HO2S1 (B1)” voltage goes above 0.6V at least once.
   - “HO2S1 (B1)” voltage goes below 0.3V at least once.
   - “HO2S1 (B1)” voltage never exceeds 1.0V.

cycle	1	2	3	4	5
HO2S1 MNTR (B1)	R-L-R-L-R-L-R-L-R-L-R				

R means HO2S1 MNTR (B1) indicates RICH
L means HO2S1 MNTR (B1) indicates LEAN

SEF217YA

Trigger	ENG SPEED	HO2S1 (B1)
	rpm	V
XXX	XXX	XXX
XXX	XXX	XXX
XXX	XXX	XXX
XXX	XXX	XXX
XXX	XXX	XXX
XXX	XXX	XXX
XXX	XXX	XXX
XXX	XXX	XXX
XXX	XXX	XXX
XXX	XXX	XXX
XXX	XXX	XXX
XXX	XXX	XXX

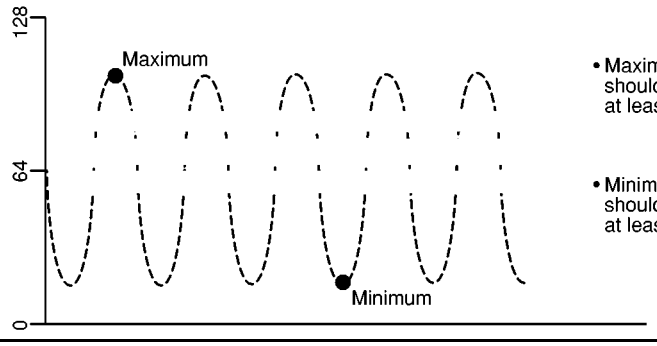

CAUTION:

- **Discard any heated oxygen sensor which has been dropped from a height of more than 0.5 m (19.7 in) onto a hard surface such as a concrete floor; use a new one.**
- **Before installing new oxygen sensor, clean exhaust system threads using Oxygen Sensor Thread Cleaner tool and approved anti-seize lubricant.**

Without CONSULT-II

1. Start engine and warm it up to normal operating temperature.
2. Set voltmeter probes between ECM terminal 49 (HO2S1 signal) and ground.

3. Check the following with engine speed held at 2,000 rpm constant under no load.
   - The voltage fluctuates between 0 to 0.3V and 0.6 to 1.0V more than 5 times within 10 seconds.
   - The maximum voltage is over 0.6V at least 1 time.
   - The minimum voltage is below 0.3V at least 1 time.
   - The voltage never exceeds 1.0V.

   1 time: 0 - 0.3V → 0.6 - 1.0V → 0 - 0.3V
   2 times: 0 - 0.3V → 0.6 - 1.0V → 0 - 0.3V → 0.6 - 1.0V → 0 - 0.3V

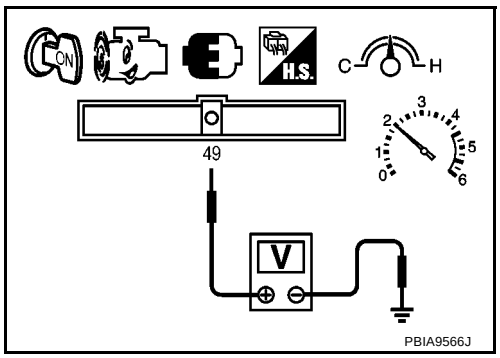

CAUTION:

- **Discard any heated oxygen sensor which has been dropped from a height of more than 0.5 m (19.7 in) onto a hard surface such as a concrete floor; use a new one.**
- **Before installing new oxygen sensor, clean exhaust system threads using Oxygen Sensor Thread Cleaner tool and approved anti-seize lubricant.**

Removal and Installation

BBS004S5

HEATED OXYGEN SENSOR 1

Refer to EM-124, "EXHAUST MANIFOLD" .

HO2S1 HEATER

PFP:22690

Description

BBS004S6

SYSTEM DESCRIPTION

Sensor	Input Signal to ECM	ECM function	Actuator
Camshaft position sensor (PHASE) Crankshaft position sensor (POS)	Engine speed	Heated oxygen sensor 1 heater control	Heated oxygen sensor 1 heater
Engine coolant temperature sensor	Engine coolant temperature		

The ECM performs ON/OFF duty control of the heated oxygen sensor 1 heater corresponding to the engine speed and engine coolant temperature. The duty percent varies with engine coolant temperature when engine is started.

OPERATION

Engine speed	Heated oxygen sensor 1 heater
Above 3,600 rpm	OFF
Below 3,600 rpm after warming up	ON

CONSULT-II Reference Value in Data Monitor Mode

BBS004S7

Specification data are reference values.

MONITOR ITEM	CONDITION	SPECIFICATION
HO2S1 HTR (B1)	● Engine: After warming up ● Engine speed: Below 3,600 rpm	ON
	● Engine speed: Above 3,600 rpm	OFF
O2SEN HTR DTY	● Engine coolant temperature when engine started: More than 80°C (176°F) ● Engine speed: Below 3,600 rpm	Approx. 30%

Wiring Diagram

BBS004S8

EC-FRO2-01

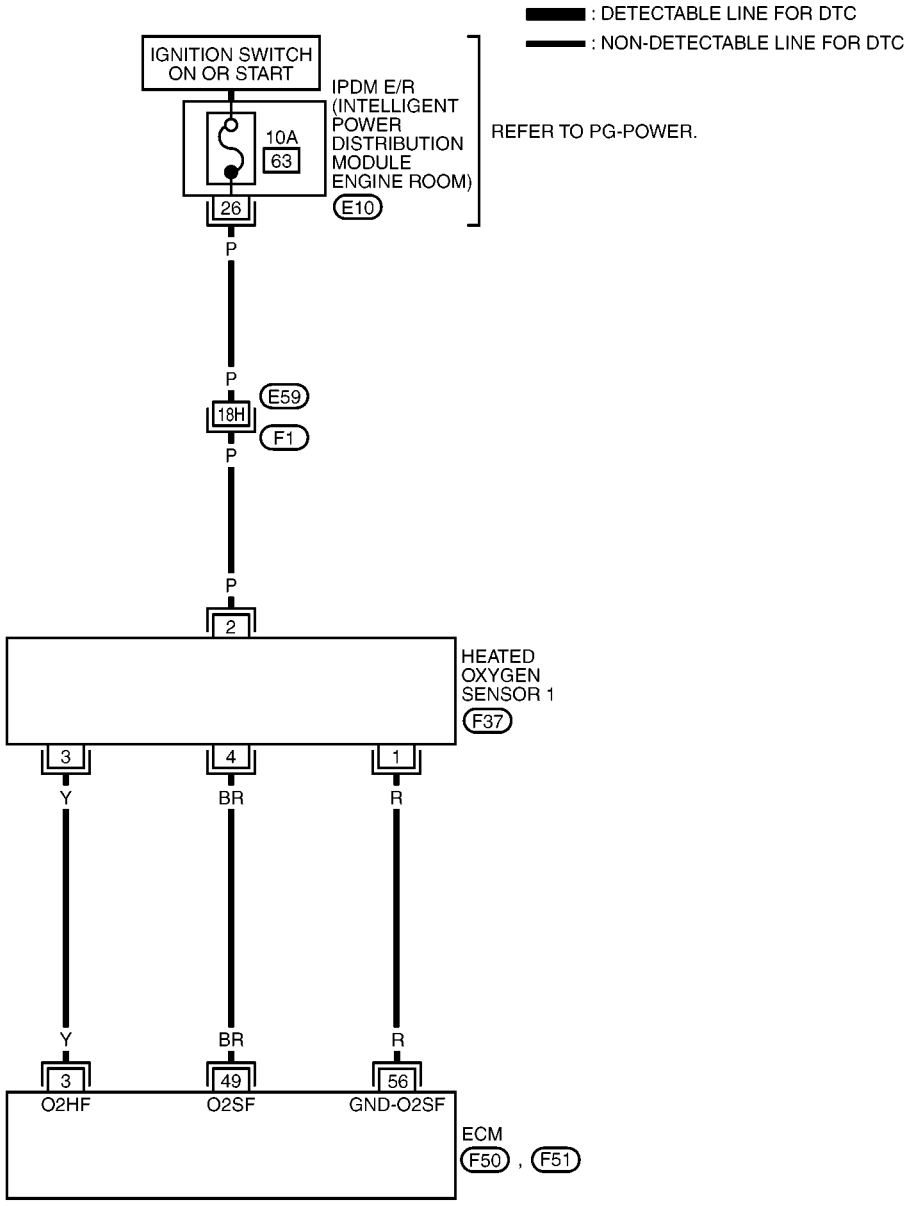

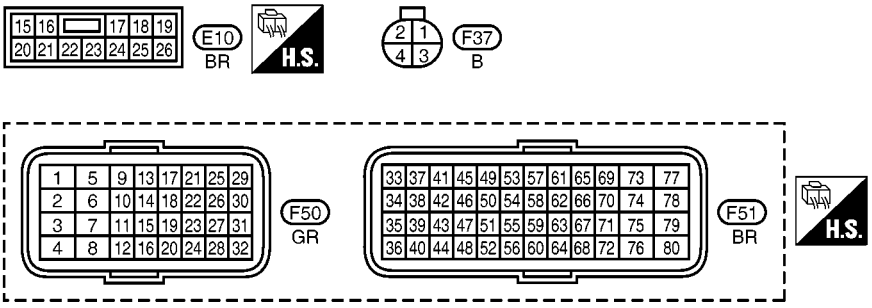

REFER TO THE FOLLOWING.
F1 - SUPER MULTIPLE JUNCTION (SMJ)

MBWA1497E

Specification data are reference values and are measured between each terminal and ground.
Pulse signal is measured by CONSULT-II.

CAUTION:
Do not use ECM ground terminals when measuring input/output voltage. Doing so may result in damage to the ECM's transistor. Use a ground other than ECM terminals, such as the ground.

TERMINAL NO.	WIRE COLOR	ITEM	CONDITION	DATA (DC Voltage)
3	Y	Heated oxygen sensor 1 heater	**[Engine is running]** ● **Warm-up condition** ● Engine speed: Below 3,600 rpm.	Approximately 10V★ 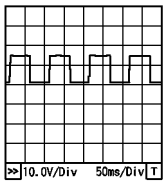 PBIA8148J
			[Ignition switch: ON] ● Engine stopped **[Engine is running]** ● Engine speed: Above 3,600 rpm.	BATTERY VOLTAGE (11 - 14V)
49	BR	Heated oxygen sensor 1	**[Engine is running]** ● **Warm-up condition** ● Engine speed: 2,000 rpm	0 - Approximately 1.0V (Periodically change)
56	R	Sensor ground (Heated oxygen sensor 1)	**[Engine is running]** ● Idle speed	Approximately 0V

★: Average voltage for pulse signal (Actual pulse signal can be confirmed by oscilloscope.)

Diagnostic Procedure

BBS004S9

1. CHECK OVERALL FUNCTION

1. Start engine and warm it up to normal operating temperature.
2. Turn ignition switch OFF and wait at least 10 seconds.
3. Turn ignition switch ON.
4. Set tester prove between ECM terminal 3 (HO2S1 heater signal) and ground.
5. Start engine and let it idle.
6. Check the voltage under the following conditions.
   Verify that the oscilloscope screen shows the signal waves as shown below.

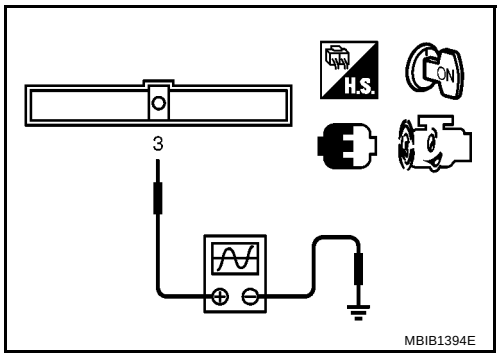

Conditions	Voltage
At idle	Approximately 7.0V★ 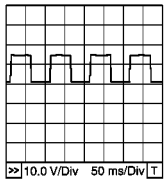 PBIB0519E
Engine speed is above 3,600 rpm	BATTERY VOLTAGE (11 - 14V)

★: Average voltage for pulse signal (Actual pulse signal can be confirmed by oscilloscope.)

OK or NG

OK >> **INSPECTION END**
NG >> GO TO 2.

2. CHECK GROUND CONNECTIONS

1. Turn ignition switch OFF.
2. Loosen and retighten ground screws on the body.
   Refer to EC-1342, "Ground Inspection" .

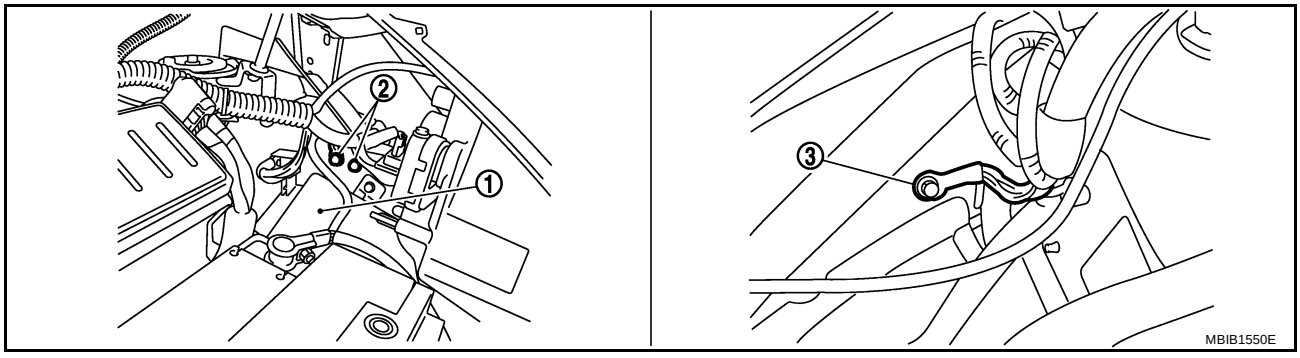

1. IPDM E/R
2. Body ground
3. Body ground

OK or NG

OK >> GO TO 3.
NG >> Repair or replace ground connections.

3. CHECK HO2S1 POWER SUPPLY CIRCUIT

1. Disconnect heated oxygen sensor 1 harness connector (1).
- ⇦: Vehicle front
2. Turn ignition switch ON.

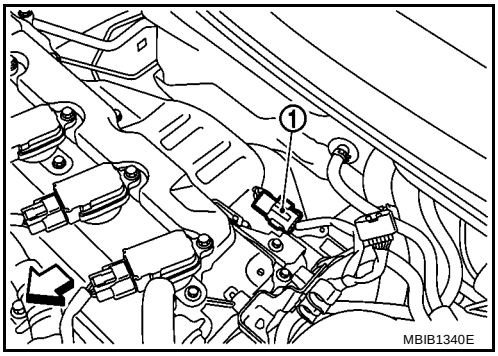

3. Check voltage between HO2S1 terminal 2 and ground with CONSULT-II or tester.

Voltage: Battery voltage

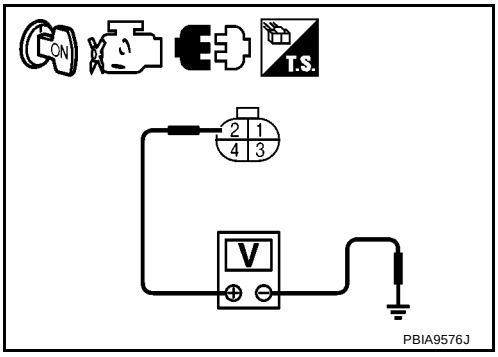

OK or NG

OK >> GO TO 5.
NG >> GO TO 4.

4. DETECT MALFUNCTIONING PART

Check the following.

- Harness connectors E59, F1
- IPDM E/R connector E10
- 10A fuse
- Harness for open or short between heated oxygen sensor 1 and fuse

>> Repair open circuit or short to ground or short to power in harness or connectors.

5. CHECK HO2S1 OUTPUT SIGNAL CIRCUIT FOR OPEN AND SHORT

1. Turn ignition switch OFF.
2. Disconnect ECM harness connector.
3. Check harness continuity between HO2S1 terminal 3 and ECM terminal 3.
Refer to Wiring Diagram.

Continuity should exist.

4. Also check harness for short to ground and short to power.

OK or NG

OK >> GO TO 6.
NG >> Repair open circuit or short to ground or short to power in harness or connectors.

6. CHECK HEATED OXYGEN SENSOR 1 HEATER

Refer to EC-1562, "Component Inspection" .

OK or NG

OK >> GO TO 7.
NG >> Replace heated oxygen sensor 1.

7. CHECK INTERMITTENT INCIDENT

Refer to EC-1336, "TROUBLE DIAGNOSIS FOR INTERMITTENT INCIDENT" .

>> **INSPECTION END**

Component Inspection

BBS004SA

HEATED OXYGEN SENSOR 1 HEATER

1. Check resistance between HO2S1 terminals as follows.

Terminal No.	Resistance
2 and 3	3.4 - 4.4 Ω [at 25°C (77°F)]
1 and 2, 3, 4	∞ Ω (Continuity should not exist)
4 and 1, 2, 3	

2. If NG, replace heated oxygen sensor 1.

CAUTION:

- **Discard any heated oxygen sensor which has been dropped from a height of more than 0.5 m (19.7 in) onto a hard surface such as a concrete floor; use a new one.**
- **Before installing new oxygen sensor, clean exhaust system threads using Oxygen Sensor Thread Cleaner tool and approved anti-seize lubricant.**

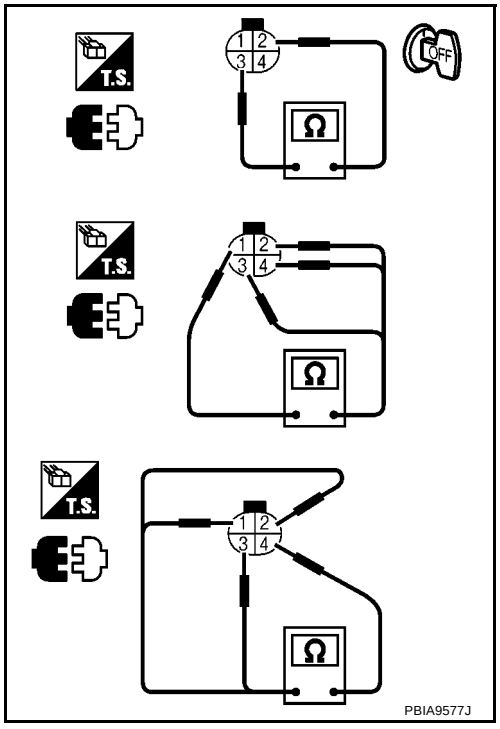

Removal and Installation

BBS004SB

HEATED OXYGEN SENSOR 1

Refer to EM-124, "EXHAUST MANIFOLD" .

HO2S2

PFP:226A0

Component Description

BBS004SC

The heated oxygen sensor 2, after three way catalyst (manifold), monitors the oxygen level in the exhaust gas on each bank.
Even if switching characteristics of the heated oxygen sensor 1 are shifted, the air-fuel ratio is controlled to stoichiometric, by the signal from the heated oxygen sensor 2.
This sensor is made of ceramic zirconia. The zirconia generates voltage from approximately 1V in richer conditions to 0V in leaner conditions.
Under normal conditions the heated oxygen sensor 2 is not used for engine control operation.

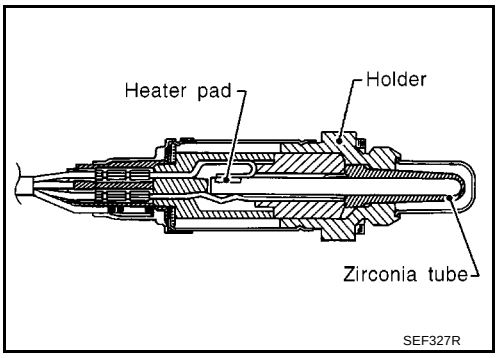

CONSULT-II Reference Value in Data Monitor Mode

BBS004SD

Specification data are reference values.

MONITOR ITEM	CONDITION	SPECIFICATION
HO2S2 (B1)	● Revving engine from idle to 3,000 rpm quickly after the following conditions are met. – Engine: After warming up. – Keep the engine speed between 3,500 rpm and 4,000 rpm for 1 minute and idle for 1 minute under no load.	0 - 0.3V ←→ Approx. 0.6 - 1.0V
HO2S2 MNTR (B1)		LEAN ←→ RICH

Wiring Diagram

BBS004SE

EC-RRO2-01

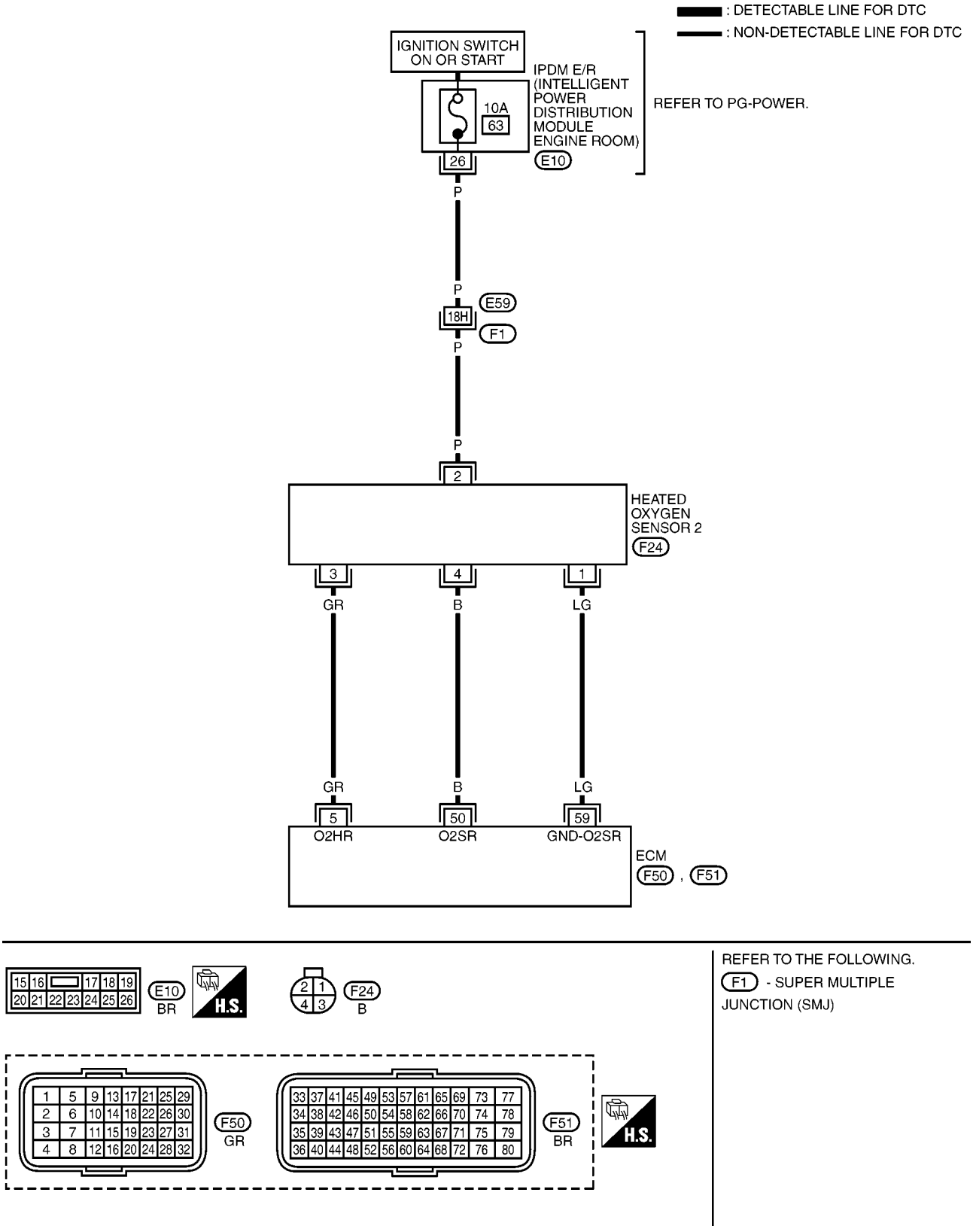

MBWA1498E

Specification data are reference values and are measured between each terminal and ground.
Pulse signal is measured by CONSULT-II.

CAUTION:
Do not use ECM ground terminals when measuring input/output voltage. Doing so may result in damage to the ECM's transistor. Use a ground other than ECM terminals, such as the ground.

TERMINAL NO.	WIRE COLOR	ITEM	CONDITION	DATA (DC Voltage)
5	GR	Heated oxygen sensor 2 heater	**[Engine is running]** ● Below 3,600 rpm after the following conditions are met. – Engine: After warming up – Keeping the engine speed between 3,500 and 4,000 rpm for 1 minute and at idle for 1 minute under no load	Approximately 10V★ 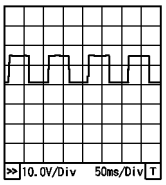 PBIA8148J
			[Ignition switch: ON] ● Engine stopped **[Engine is running]** ● Engine speed: Above 3,600 rpm	BATTERY VOLTAGE (11 - 14V)
50	B	Heated oxygen sensor 2	**[Engine is running]** ● Revving engine from idle to 3,000 rpm quickly after the following conditions are met. – Engine: After warming up. – Keep the engine speed between 3,500 rpm and 4,000 rpm for 1 minute and at idle for 1 minute under no load.	0 - Approximately 1.0V
59	LG	Sensor ground (Heated oxygen sensor 2)	**[Engine is running]** ● **Warm-up condition** ● Idle speed	Approximately 0V

★: Average voltage for pulse signal (Actual pulse signal can be confirmed by oscilloscope.)

Diagnostic Procedure

BBS004SF

1. CHECK OVERALL FUNCTION - I

1. Start engine and warm it up to the normal operating temperature.
2. Turn ignition switch OFF and wait at least 10 seconds.
3. Start engine and keep the engine speed between 3,500 and 4,000 rpm for at least 1 minute under no load.
4. Let engine idle for 1 minute.
5. Set voltmeter probes between ECM terminal 50 (HO2S2 signal) and ground.
6. Check the voltage while revving engine up to 4,000 rpm under no load at least 10 times.
   (Depress and release the accelerator pedal as quickly as possible.)

The voltage does not remain in the range of 0.2 - 0.4V

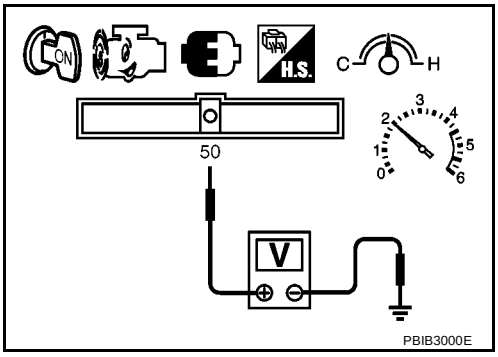

OK or NG

OK >> **INSPECTION END**
NG >> GO TO 2.

2. CHECK OVERALL FUNCTION - II

Keep engine at idle for 10 minutes, then check the voltage between ECM terminal 50 (HO2S2 signal) and ground, or check the voltage when coasting at 80 km/h (50 MPH) in D position with OD “OFF” (A/T), 3rd gear position (M/T).

The voltage does not remain in the range of 0.2 - 0.4V

OK or NG

OK >> **INSPECTION END**
NG >> GO TO 3.

3. CHECK GROUND CONNECTIONS

1. Turn ignition switch OFF.
2. Loosen and retighten ground screws on the body.
   Refer to EC-1342, "Ground Inspection" .

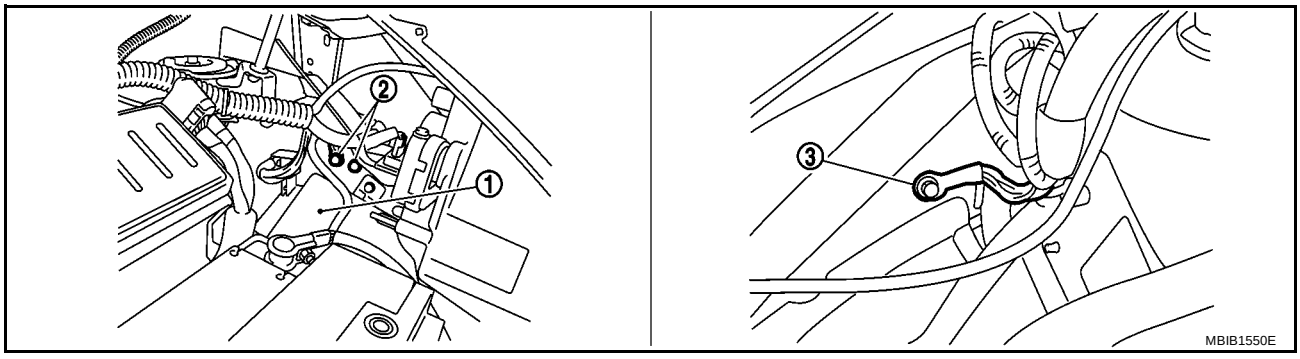

1. IPDM E/R
2. Body ground
3. Body ground

OK or NG

OK >> GO TO 4.
NG >> Repair or replace ground connections.

4. CHECK HO2S2 GROUND CIRCUIT FOR OPEN AND SHORT

1. Disconnect heated oxygen sensor 2 harness connector (2).
   – Heated oxygen sensor 2 (1)
2. Disconnect ECM harness connector.
3. Check harness continuity between HO2S2 terminal 1 and ECM terminal 59.
   Refer to Wiring Diagram.

   Continuity should exist.

4. Also check harness for short to ground and short to power.

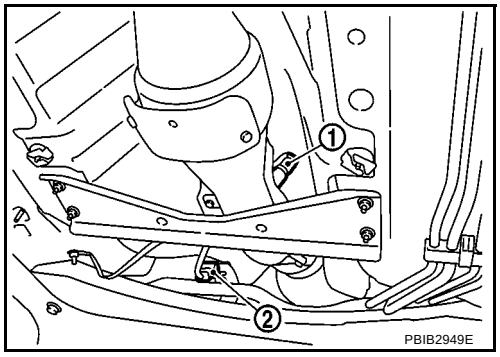

OK or NG

OK >> GO TO 5.
NG >> Repair open circuit or short to ground or short to power in harness or connectors.

5. CHECK HO2S2 INPUT SIGNAL CIRCUIT FOR OPEN AND SHORT

1. Check harness continuity between HO2S2 terminal 4 ECM terminal 50.
   Refer to Wiring Diagram.

   Continuity should exist.

2. Check harness continuity between ECM terminal 50 or HO2S2 terminal 4 and ground.
   Refer to Wiring Diagram.

   Continuity should not exist.

3. Also check harness for short to power.

OK or NG

OK >> GO TO 6.
NG >> Repair open circuit or short to ground or short to power in harness or connectors.

6. CHECK HEATED OXYGEN SENSOR 2

Refer to EC-1567, "Component Inspection" .

OK or NG

OK >> GO TO 7.
NG >> Replace heated oxygen sensor 2.

7. CHECK INTERMITTENT INCIDENT

Refer to EC-1336, "TROUBLE DIAGNOSIS FOR INTERMITTENT INCIDENT" .

>> **INSPECTION END**

Component Inspection

BBS004SG

HEATED OXYGEN SENSOR 2

With CONSULT-II

1. Start engine and warm it up to the normal operating temperature.
2. Turn ignition switch OFF and wait at least 10 seconds.
3. Start engine and keep the engine speed between 3,500 and 4,000 rpm for at least 1 minute under no load.
4. Let engine idle for 1 minute.
5. Select “FUEL INJECTION” in “ACTIVE TEST” mode, and select “HO2S2 (B1)” as the monitor item with CONSULT-II.

ACTIVE TEST	
FUEL INJECTION	25 %
MONITOR	
ENG SPEED	XXX rpm
HO2S1 (B1)	XXX V
HO2S2 (B1)	XXX V
HO2S1 MNTR (B1)	RICH
HO2S2 MNTR (B1)	RICH

SEF662Y

6. Check “HO2S2 (B1)” at idle speed when adjusting “FUEL INJECTION” to ±25%.

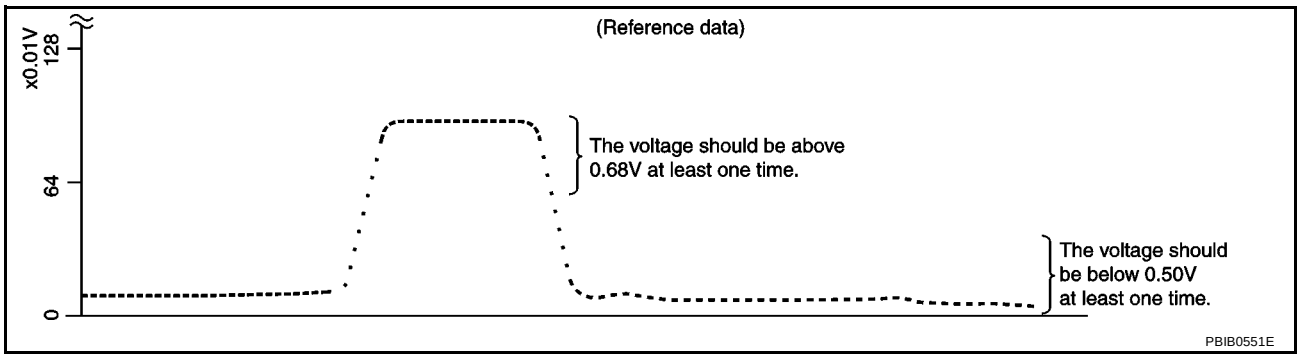

“HO2S2 (B1)” should be above 0.68V at least once when the “FUEL INJECTION” is +25%.
“HO2S2 (B1)” should be below 0.50V at least once when the “FUEL INJECTION” is –25%.

CAUTION:

- **Discard any heated oxygen sensor which has been dropped from a height of more than 0.5 m (19.7 in) onto a hard surface such as a concrete floor; use a new one.**
- **Before installing new oxygen sensor, clean exhaust system threads using Oxygen Sensor Thread Cleaner tool and approved anti-seize lubricant.**

Without CONSULT-II

1. Start engine and warm it up to the normal operating temperature.
2. Turn ignition switch OFF and wait at least 10 seconds.
3. Start engine and keep the engine speed between 3,500 and 4,000 rpm for at least 1 minute under no load.
4. Let engine idle for 1 minute.
5. Set voltmeter probes between ECM terminal 50 (HO2S2 signal) and ground.
6. Check the voltage when revving up to 4,000 rpm under no load at least 10 times.
   (Depress and release accelerator pedal as soon as possible.)
   The voltage should be above 0.68V at least once during this procedure.
   If the voltage is above 0.68V at step 6, step 7 is not necessary.
7. Keep vehicle idling for 10 minutes, then check voltage. Or check the voltage when coasting from 80 km/h (50 MPH) in D position with “OD” OFF (A/T), 3rd gear position (M/T).
   The voltage should be below 0.50V at least once during this procedure.

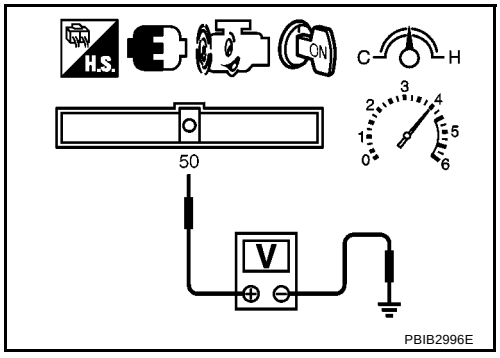

8. If NG, replace heated oxygen sensor 2.

CAUTION:

- **Discard any heated oxygen sensor which has been dropped from a height of more than 0.5 m (19.7 in) onto a hard surface such as a concrete floor; use a new one.**
- **Before installing new oxygen sensor, clean exhaust system threads using Oxygen Sensor Thread Cleaner tool and approved anti-seize lubricant.**

Removal and Installation

BBS004SH

HEATED OXYGEN SENSOR 2

Refer to EX-3, "EXHAUST SYSTEM" .

HO2S2 HEATER

PFP:226A0

Description

BBS004SI

SYSTEM DESCRIPTION

Sensor	Input Signal to ECM	ECM Function	Actuator
Camshaft position sensor (PHASE)	Engine speed	Heated oxygen sensor 2 heater control	Heated oxygen sensor 2 heater
Crankshaft position sensor (POS)			
Engine coolant temperature sensor	Engine coolant temperature		
Mass air flow sensor	Amount of intake air		

The ECM performs ON/OFF control of the heated oxygen sensor 2 heater corresponding to the engine speed, amount of intake air and engine coolant temperature.

OPERATION

Engine speed	Heated oxygen sensor 2 heater
Above 3,600 rpm	OFF
● Below 3,600 rpm after the following conditions are met. – Engine: After warming up – Keeping the engine speed between 3,500 and 4,000 rpm for 1 minute and at idle for 1 minute under no load	ON

CONSULT-II Reference Value in Data Monitor Mode

BBS004SJ

Specification data are reference values.

MONITOR ITEM	CONDITION	SPECIFICATION
HO2S2 HTR (B1)	● Engine speed: Above 3,600 rpm	OFF
	● Below 3,600 rpm after the following conditions are met. – Engine: After warming up – Keeping the engine speed between 3,500 and 4,000 rpm for 1 minute and at idle for 1 minute under no load	ON

Wiring Diagram

BBS004SK

EC-RRO2-01

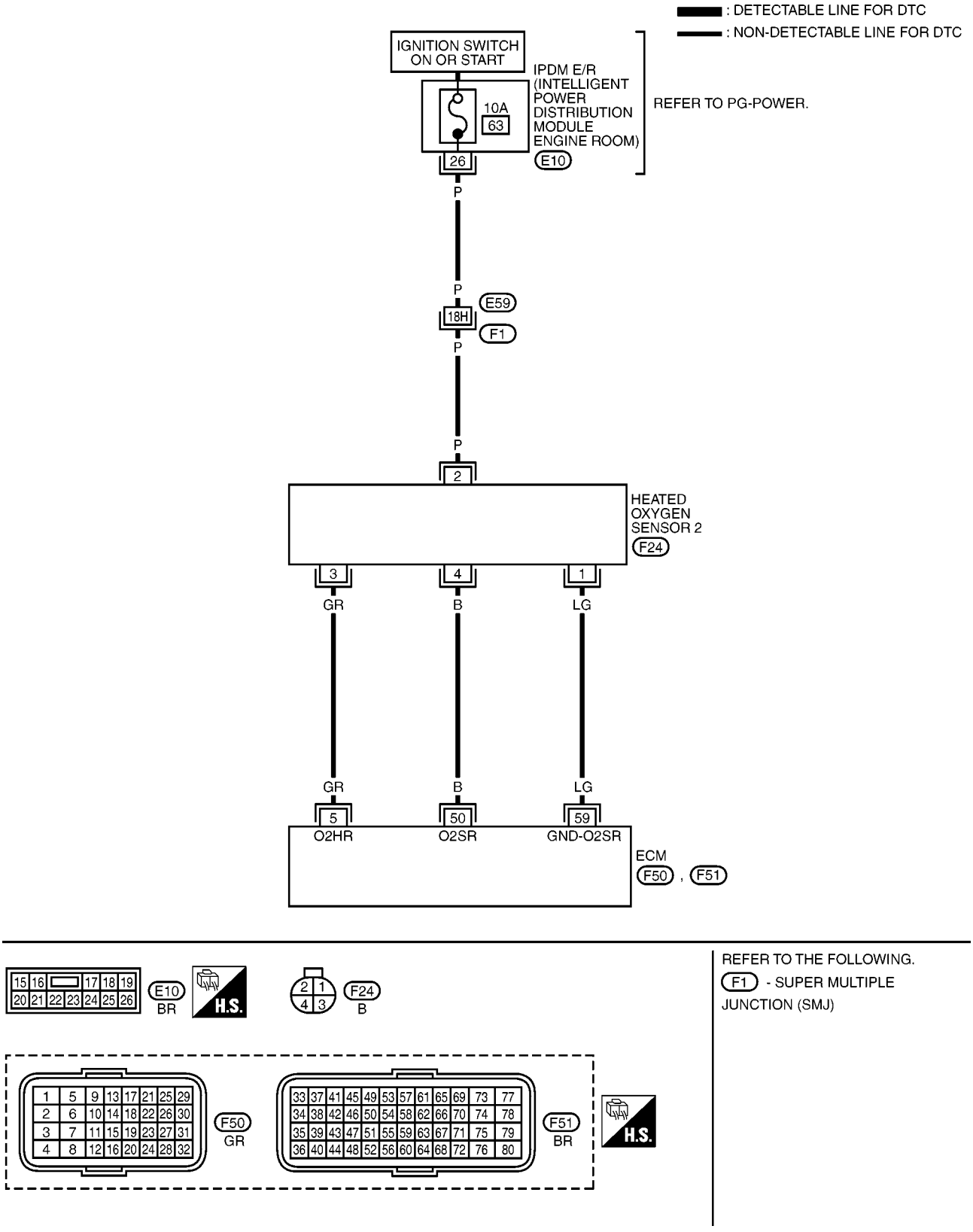

MBWA1498E

Specification data are reference values and are measured between each terminal and ground.
Pulse signal is measured by CONSULT-II.

CAUTION:
Do not use ECM ground terminals when measuring input/output voltage. Doing so may result in damage to the ECM's transistor. Use a ground other than ECM terminals, such as the ground.

TERMINAL NO.	WIRE COLOR	ITEM	CONDITION	DATA (DC Voltage)
5	GR	Heated oxygen sensor 2 heater	**[Engine is running]** ● Engine speed: Below 3,600 rpm after the following conditions are met. – Engine: After warming up – Keeping the engine speed between 3,500 and 4,000 rpm for 1 minute and at idle for 1 minute under no load	Approximately 10V★ 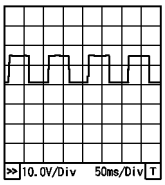 PBIA8148J
			[Ignition switch: ON] ● Engine stopped **[Engine is running]** ● Engine speed: Above 3,600 rpm.	BATTERY VOLTAGE (11 - 14V)
50	B	Heated oxygen sensor 2	**[Engine is running]** ● Revving engine from idle to 3,000 rpm quickly after the following conditions are met. – Engine: After warming up – Keeping the engine speed between 3,500 and 4,000 rpm for 1 minute and at idle for 1 minute under no load	0 - Approximately 1.0V
59	LG	Sensor ground (Heated oxygen sensor 2)	**[Engine is running]** ● **Warm-up condition** ● Idle speed	Approximately 0V

★: Average voltage for pulse signal (Actual pulse signal can be confirmed by oscilloscope.)

Diagnostic Procedure

BBS004SL

1. CHECK OVERALL FUNCTION

1. Start engine and warm it up to the normal operating temperature.
2. Turn ignition switch OFF and wait at least 10 seconds.
3. Start engine and keep the engine speed between 3,500 and 4,000 rpm for at least 1 minute under no load.
4. Let engine idle for 1 minute.
5. Set tester proves between ECM terminal 5 (HO2S2 heater signal) and ground.
6. Check the voltage under the following conditions.
   Verify that the oscilloscope screen shows the signal waves as shown below.

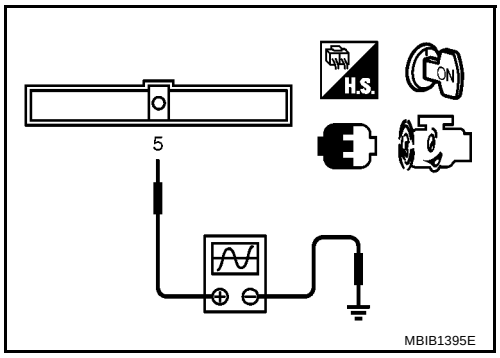

Conditions	Voltage
At idle	Approximately 10V★ 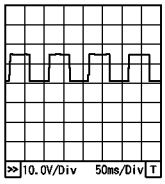 PBIA8148J
Engine speed is above 3,600 rpm	BATTERY VOLTAGE (11 - 14V)

★: Average voltage for pulse signal (Actual pulse signal can be confirmed by oscilloscope.)

OK or NG

OK >> **INSPECTION END**
NG >> GO TO 2.

2. CHECK GROUND CONNECTIONS

1. Turn ignition switch OFF.
2. Loosen and retighten ground screws on the body.
   Refer to EC-1342, "Ground Inspection" .

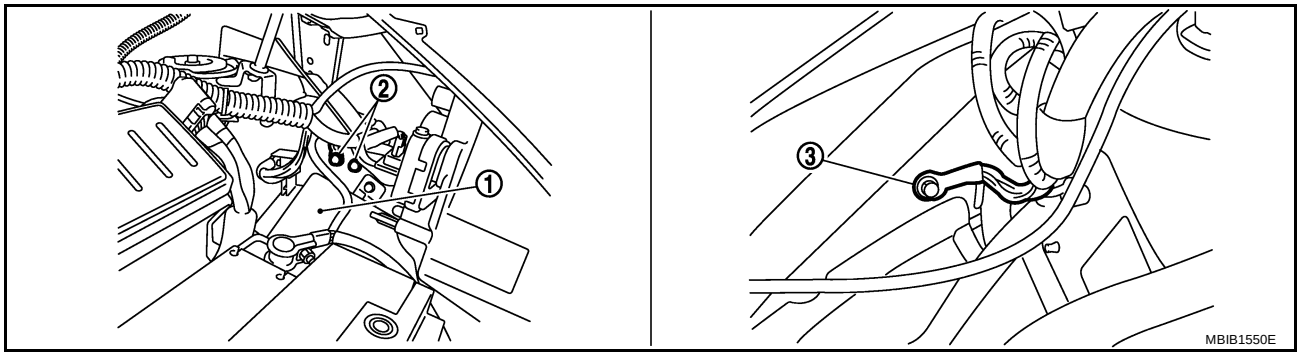

1. IPDM E/R
2. Body ground
3. Body ground

OK or NG

OK >> GO TO 3.
NG >> Repair or replace ground connections.

3. CHECK HO2S2 POWER SUPPLY CIRCUIT

1. Disconnect heated oxygen sensor 2 harness connector (2).
- Heated oxygen sensor 2 (1).
2. Turn ignition switch ON.

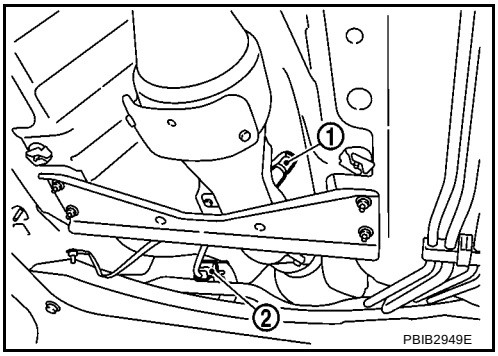

3. Check voltage between HO2S2 terminal 2 and ground with CONSULT-II or tester.

Voltage: Battery voltage

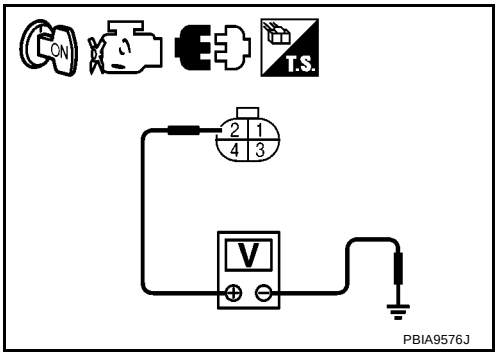

OK or NG

OK >> GO TO 5.
NG >> GO TO 4.

4. DETECT MALFUNCTIONING PART

Check the following.

- Harness connectors E59, F1
- IPDM E/R connector E10
- 10A fuse
- Harness for open or short between heated oxygen sensor 2 and fuse

>> Repair open circuit or short to ground or short to power in harness or connectors.

5. CHECK HO2S2 OUTPUT SIGNAL CIRCUIT FOR OPEN AND SHORT

1. Turn ignition switch OFF.
2. Disconnect ECM harness connector.
3. Check harness continuity between HO2S2 terminal 3 and ECM terminal 5.
Refer to Wiring Diagram.

Continuity should exist.

4. Also check harness for short to ground and short to power.

OK or NG

OK >> GO TO 6.
NG >> Repair open circuit or short to ground or short to power in harness or connectors.

6. CHECK HEATED OXYGEN SENSOR 2 HEATER

Refer to EC-1574, "Component Inspection" .

OK or NG

OK >> GO TO 7.
NG >> Replace heated oxygen sensor 2.

7. CHECK INTERMITTENT INCIDENT

Refer to EC-1336, "TROUBLE DIAGNOSIS FOR INTERMITTENT INCIDENT" .

>> **INSPECTION END**

Component Inspection

BBS004SM

HEATED OXYGEN SENSOR 2 HEATER

1. Check resistance between HO2S2 terminals as follows.

Terminal No.	Resistance
2 and 3	3.4 - 4.4 Ω [at 25°C (77°F)]
1 and 2, 3, 4	∞ Ω (Continuity should not exist)
4 and 1, 2, 3	

2. If NG, replace heated oxygen sensor 2.

CAUTION:

- **Discard any heated oxygen sensor which has been dropped from a height of more than 0.5 m (19.7 in) onto a hard surface such as a concrete floor; use a new one.**
- **Before installing new oxygen sensor, clean exhaust system threads using Oxygen Sensor Thread Cleaner tool and approved anti-seize lubricant.**

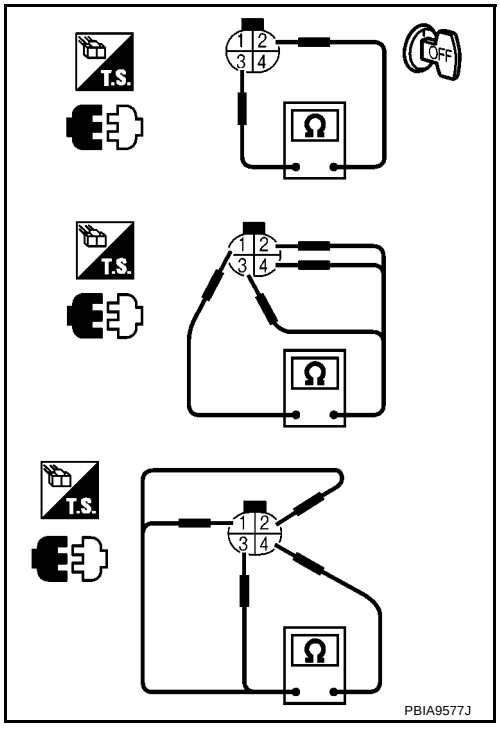

Removal and Installation

BBS004SN

HEATED OXYGEN SENSOR 2

Refer to EX-3, "EXHAUST SYSTEM" .

IAT SENSOR

PFP:22630

Component Description

BBS004SO

The intake air temperature sensor is built-into mass air flow sensor (1). The sensor detects intake air temperature and transmits a signal to the ECM.
The temperature sensing unit uses a thermistor which is sensitive to the change in temperature. Electrical resistance of the thermistor decreases in response to the temperature rise.

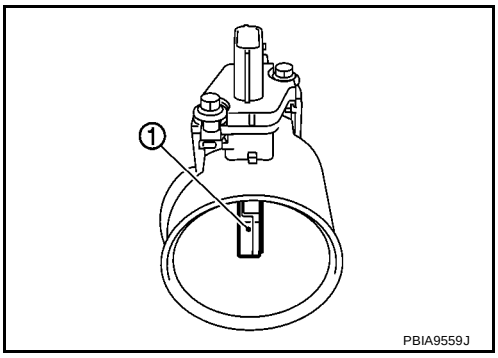

<Reference data>

Intake air temperature °C (°F)	Voltage* V	Resistance kΩ
25 (77)	3.3	1.800 - 2.200
80 (176)	1.2	0.283 - 0.359

*: This data is reference value and is measured between ECM terminal 46 (Intake air temperature sensor) and ground.

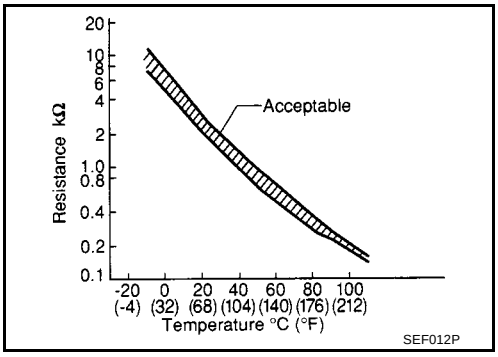

CAUTION:
Do not use ECM ground terminals when measuring input/output voltage. Doing so may result in damage to the ECM's transistor. Use a ground other than ECM terminals, such as the ground.

Wiring Diagram

BBS004SP

EC-IATSEN-01

: DETECTABLE LINE FOR DTC
: NON-DETECTABLE LINE FOR DTC

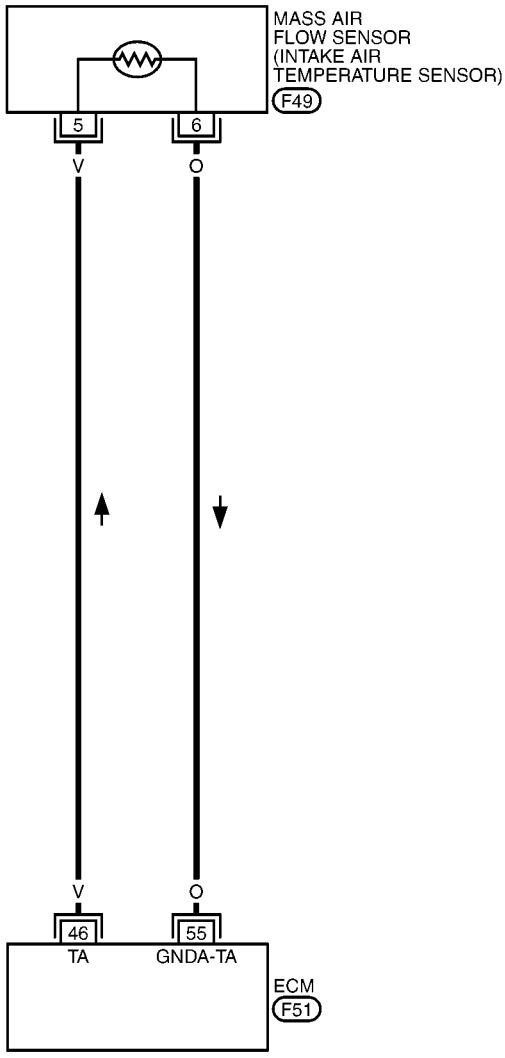

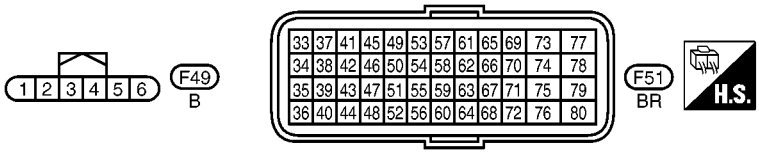

MBWA1499E

Diagnostic Procedure

BBS004SQ

1. CHECK OVERALL FUNCTION

1. Turn ignition switch ON.
2. Check voltage between ECM terminal 46 and ground with CONSULT-II or tester.

Voltage: Approximately 0 - 4.8V

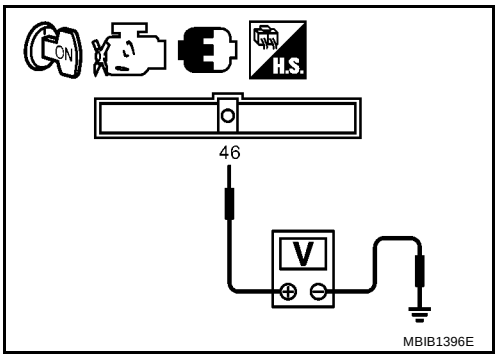

OK or NG

OK >> **INSPECTION END**
NG >> GO TO 2.

2. CHECK GROUND CONNECTIONS

1. Turn ignition switch OFF.
2. Loosen and retighten ground screws on the body.
Refer to EC-1342, "Ground Inspection" .

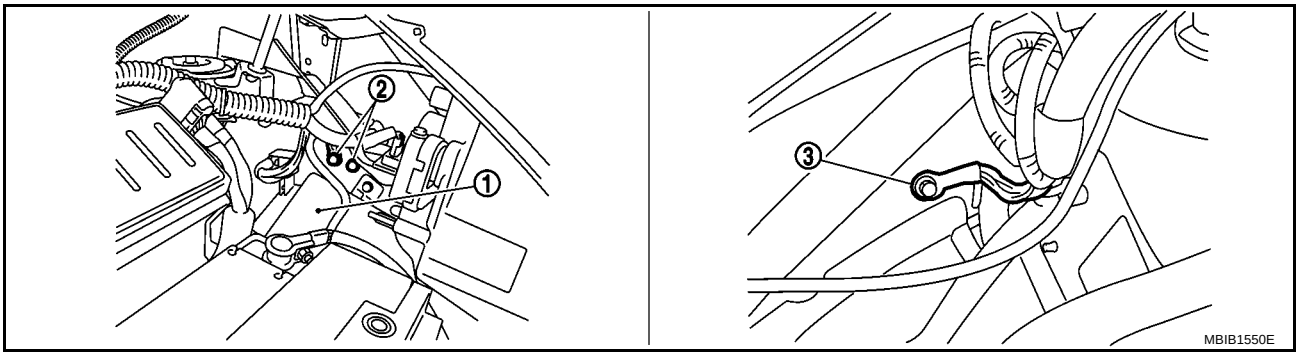

1. IPDM E/R
2. Body ground
3. Body ground

OK or NG

OK >> GO TO 3.
NG >> Repair or replace ground connections.

3. CHECK INTAKE AIR TEMPERATURE SENSOR POWER SUPPLY CIRCUIT

1. Turn ignition switch OFF.
2. Disconnect mass air flow sensor (intake air temperature sensor is built-into) (1) harness connector.

– ⇦: Vehicle front

3. Turn ignition switch ON.

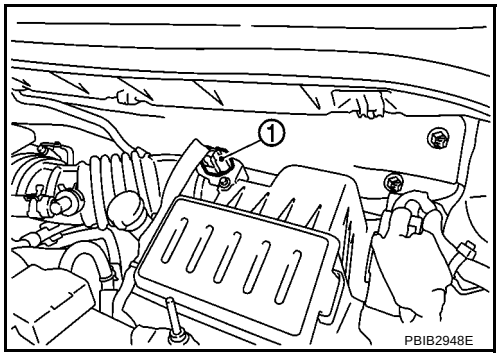

4. Check voltage between mass air flow sensor terminal 5 and ground with CONSULT-II or tester.

Voltage: Approximately 5V

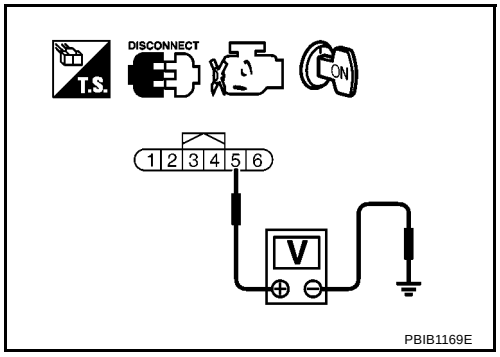

OK or NG

OK >> GO TO 4.
NG >> Repair open circuit or short to ground or short to power in harness or connectors.

4. CHECK INTAKE AIR TEMPERATURE SENSOR GROUND CIRCUIT FOR OPEN AND SHORT

1. Turn ignition switch OFF.
2. Disconnect ECM harness connector.
3. Check harness continuity between mass air flow sensor terminal 6 and ECM terminal 55. Refer to Wiring Diagram.

Continuity should exist.

4. Also check harness for short to ground and short to power.

OK or NG

OK >> GO TO 5.
NG >> Repair open circuit or short to ground or short to power in harness or connectors.

5. CHECK INTAKE AIR TEMPERATURE SENSOR

Refer to EC-1579, "Component Inspection" .

OK or NG

OK >> GO TO 6.
NG >> Replace mass air flow sensor (with intake air temperature sensor).

6. CHECK INTERMITTENT INCIDENT

Refer to EC-1336, "TROUBLE DIAGNOSIS FOR INTERMITTENT INCIDENT" .

>> **INSPECTION END**

Component Inspection

BBS004SR

INTAKE AIR TEMPERATURE SENSOR

1. Check resistance between mass air flow sensor (1) terminals 5 and 6 under the following conditions.

Intake air temperature °C (°F)	Resistance kΩ
25 (77)	1.800 - 2.200

2. If NG, replace mass air flow sensor (with intake air temperature sensor).

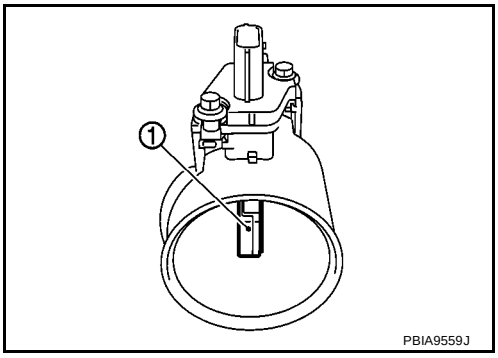

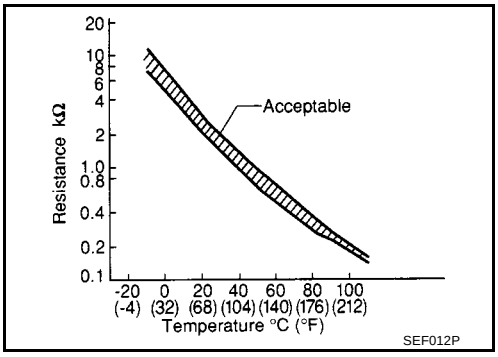

Removal and Installation

BBS004SS

MASS AIR FLOW SENSOR

Refer to EM-118, "AIR CLEANER AND AIR DUCT" .

IGNITION SIGNAL

PFP:22448

Component Description

BBS004ST

IGNITION COIL & POWER TRANSISTOR

The ignition signal from the ECM is sent to and amplified by the power transistor. The power transistor turns ON and OFF the ignition coil (1) primary circuit. This ON/OFF operation induces the proper high voltage in the coil secondary circuit.

- Fuel injector (2)

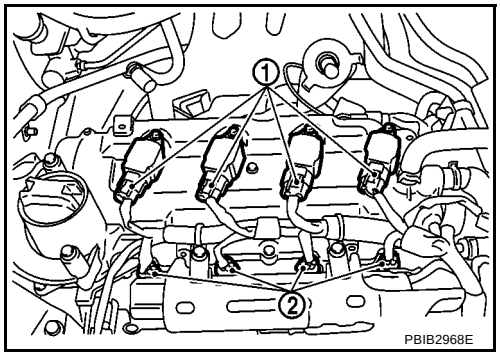

Wiring Diagram

BBS004SU

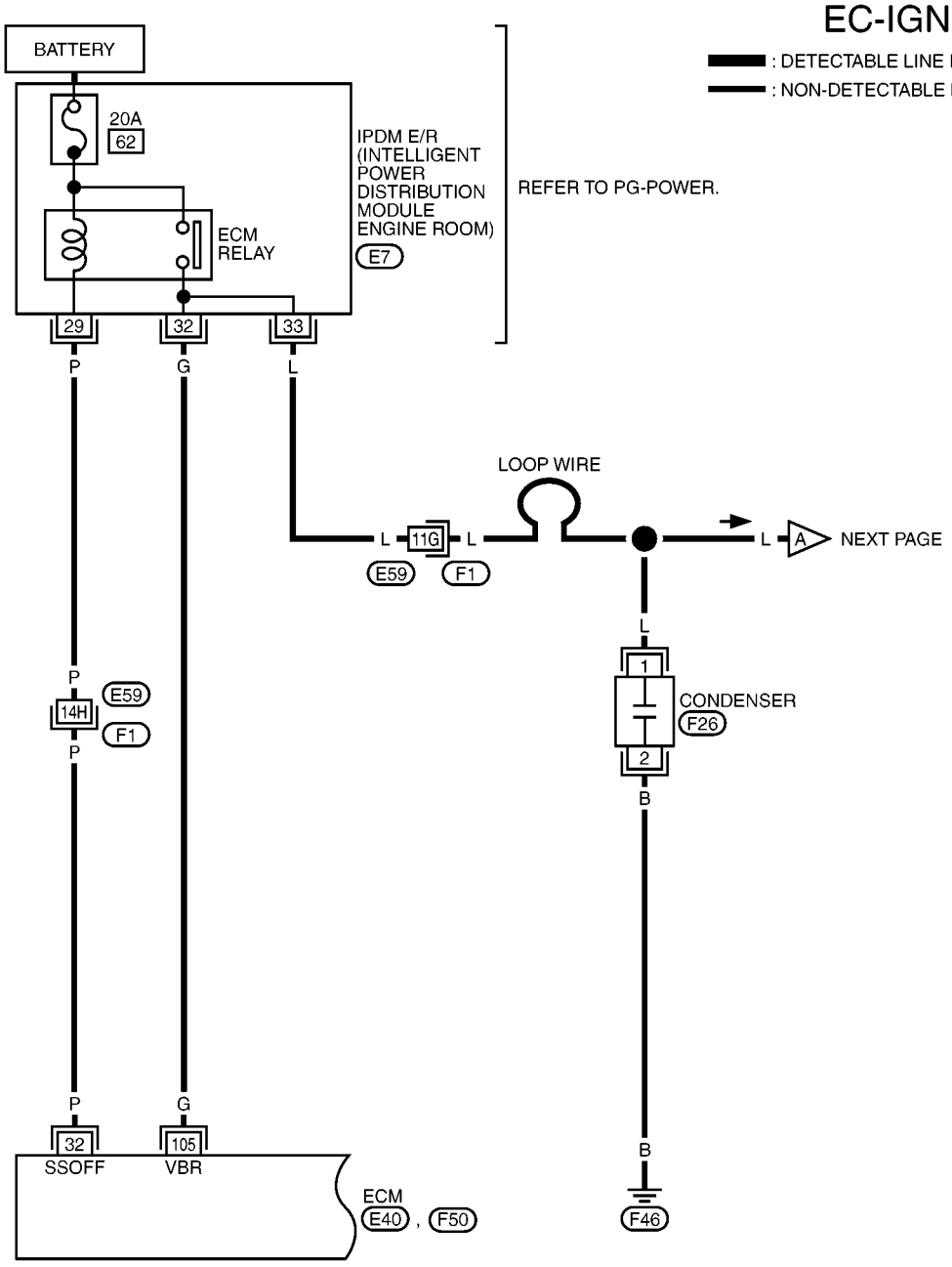

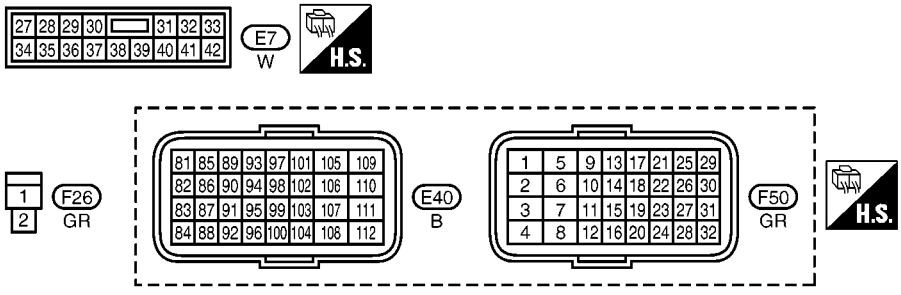

REFER TO THE FOLLOWING.
F1 - SUPER MULTIPLE JUNCTION (SMJ)

MBWA1491E

Specification data are reference values and are measured between each terminal and ground.

CAUTION:

Do not use ECM ground terminals when measuring input/output voltage. Doing so may result in damage to the ECM's transistor. Use a ground other than ECM terminals, such as the ground.

TERMINAL NO.	WIRE COLOR	ITEM	CONDITION	DATA (DC Voltage)
32	P	ECM relay (Self shut-off)	**[Engine is running]** **[Ignition switch: OFF]** ● For a few seconds after turning ignition switch OFF	0 - 1.0V
			[Ignition switch: OFF] ● More than a few seconds after turning ignition switch OFF	BATTERY VOLTAGE (11 - 14V)
105	G	Power supply for ECM	**[Ignition switch: ON]**	BATTERY VOLTAGE (11 - 14V)

EC-IGNSYS-02

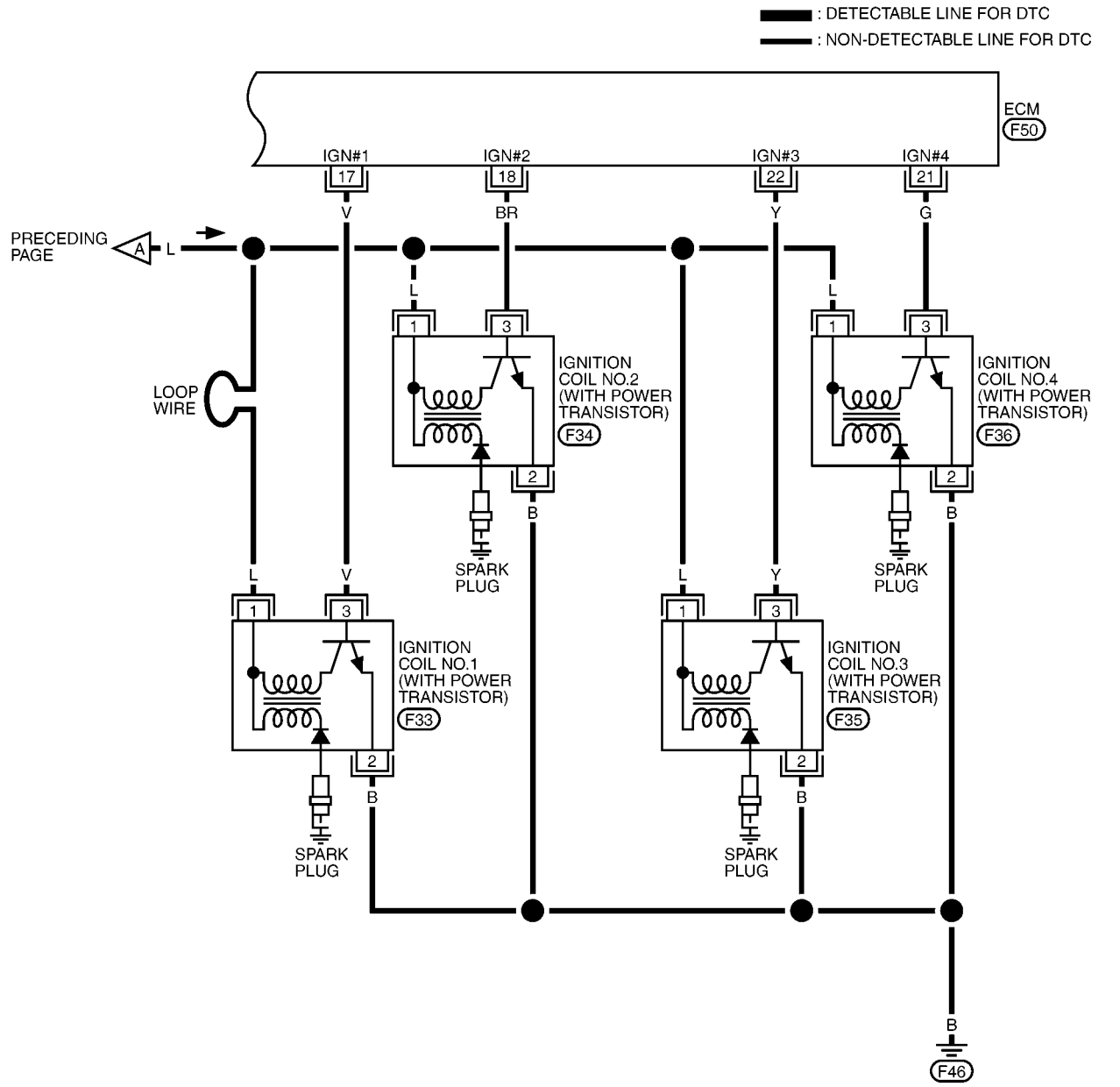

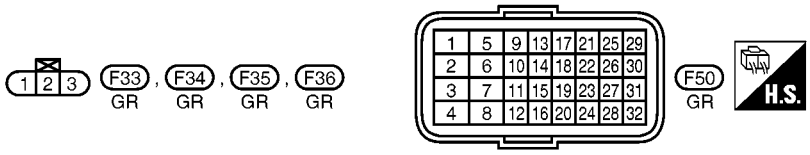

MBWA1492E

Specification data are reference values and are measured between each terminal and ground.
Pulse signal is measured by CONSULT-II.

CAUTION:
Do not use ECM ground terminals when measuring input/output voltage. Doing so may result in damage to the ECM's transistor. Use a ground other than ECM terminals, such as the ground.

TERMINAL NO.	WIRE COLOR	ITEM	CONDITION	DATA (DC Voltage)
17 18 21 22	V BR G Y	Ignition signal No. 1 Ignition signal No. 2 Ignition signal No. 4 Ignition signal No. 3	**[Engine is running]** ● **Warm-up condition** ● Idle speed **NOTE:** The pulse cycle changes depending on rpm at idle	0 - 0.3V★ 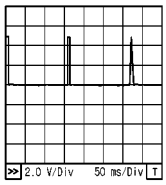 PBIA9265J
			[Engine is running] ● **Warm-up condition** ● Engine speed: 2,000 rpm	0.2 - 0.5V★ 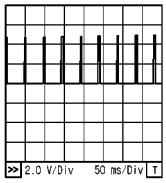 PBIA9266J

★: Average voltage for pulse signal (Actual pulse signal can be confirmed by oscilloscope.)

Diagnostic Procedure

BBS004SV

1. CHECK ENGINE START

Turn ignition switch OFF, and restart engine.
Is engine running?

Yes or No

Yes (With CONSULT-II)>>GO TO 2.
Yes (Without CONSULT-II)>>GO TO 3.
No >> GO TO 4.

2. CHECK OVERALL FUNCTION

With CONSULT-II

1. Perform “POWER BALANCE” in “ACTIVE TEST” mode with CONSULT-II.
2. Make sure that each circuit produces a momentary engine speed drop.

OK or NG

OK >> **INSPECTION END**
NG >> GO TO 10.

ACTIVE TEST	
POWER BALANCE	
MONITOR	
ENG SPEED	XXX rpm
MAS A/F SE-B1	XXX V

PBIB0133E

3. CHECK OVERALL FUNCTION

Without CONSULT-II

1. Let engine idle.
2. Read the voltage signal between ECM terminals 17, 18, 21, 22 and ground with an oscilloscope.
3. Verify that the oscilloscope screen shows the signal wave as shown below.

   NOTE:
   The pulse cycle changes depending on rpm at idle.

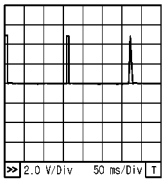

PBIA9265J

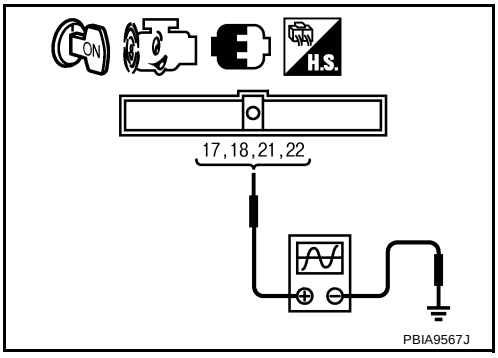

PBIA9567J

OK or NG

OK >> **INSPECTION END**
NG >> GO TO 10.

4. CHECK IGNITION COIL POWER SUPPLY CIRCUIT-I

1. Turn ignition switch OFF, wait at least 10 seconds and then turn ON.
2. Check voltage between ECM terminal 105 and ground with CONSULT-II or tester.

   Voltage: Battery voltage

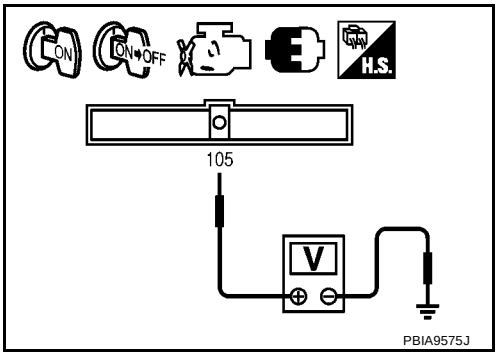

PBIA9575J

OK or NG

OK >> GO TO 5.
NG >> Go to EC-1337, "POWER SUPPLY AND GROUND CIRCUIT" .

5. CHECK IGNITION COIL POWER SUPPLY CIRCUIT-II

1. Turn ignition switch OFF.
2. Disconnect condenser (1) harness connector.

– ⇦: Vehicle front

3. Turn ignition switch ON.

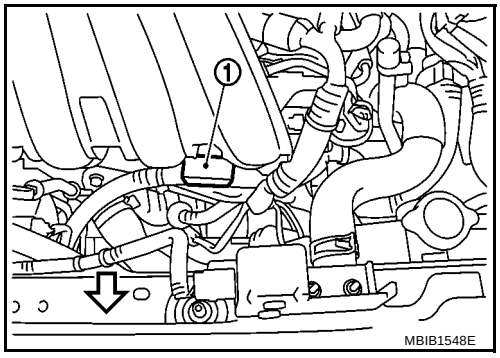

4. Check voltage between condenser terminal 1 and ground with CONSULT-II or tester.

Voltage: Battery voltage

OK or NG

OK >> GO TO 8.
NG >> GO TO 6.

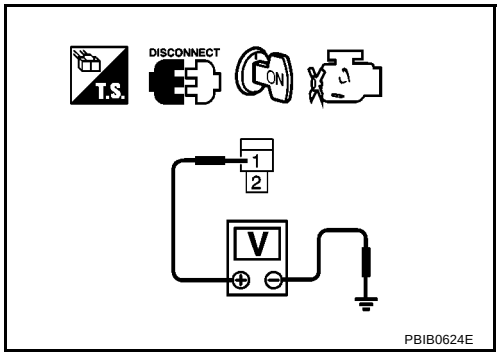

6. CHECK IGNITION COIL POWER SUPPLY CIRCUIT-III

1. Turn ignition switch OFF.
2. Disconnect IPDM E/R harness connector E7.
3. Check harness continuity between IPDM E/R terminal 33 and condenser terminal 1.
   Refer to Wiring Diagram.

Continuity should exist.

4. Also check harness for short to ground and short to power.

OK or NG

OK >> Go to EC-1337, "POWER SUPPLY AND GROUND CIRCUIT" .
NG >> GO TO 7.

7. DETECT MALFUNCTIONING PART

Check the following.

- Harness connectors E59, F1
- Harness for open or short between IPDM E/R and condenser

>> Repair open circuit or short to ground or short to power in harness or connectors.

8. CHECK CONDENSER GROUND CIRCUIT FOR OPEN AND SHORT

1. Turn ignition switch OFF.
2. Check harness continuity between condenser terminal 2 and ground.
   Refer to Wiring Diagram.

   Continuity should exist.

3. Also check harness for short to power.

OK or NG

OK >> GO TO 9.
NG >> Repair open circuit or short to power in harness or connectors.

9. CHECK CONDENSER

Refer to EC-1588, "Component Inspection"

OK or NG

OK >> GO TO 10.
NG >> Replace condenser.

10. CHECK IGNITION COIL POWER SUPPLY CIRCUIT-IV

1. Turn ignition switch OFF.
2. Reconnect all harness connectors disconnected.
3. Disconnect ignition coil (1) harness connector.
   – Fuel injector (2)
4. Turn ignition switch ON.

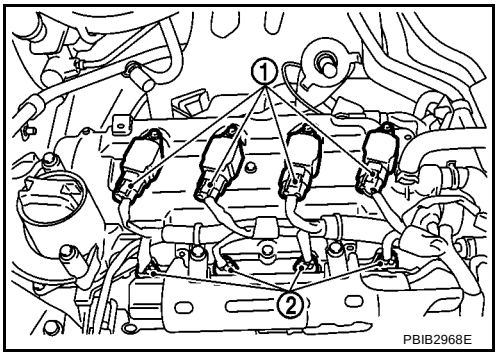

5. Check voltage between ignition coil terminal 1 and ground with CONSULT-II or tester.

   Voltage: Battery voltage

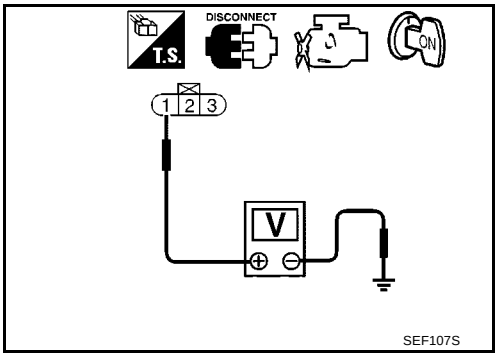

OK or NG

OK >> GO TO 12.
NG >> GO TO 11.

11. DETECT MALFUNCTIONING PART

Check the following.

- Harness connector F1
- Harness for open or short between ignition coil and harness connector F1

>> Repair or replace harness or connectors.

12. CHECK IGNITION COIL GROUND CIRCUIT FOR OPEN AND SHORT

1. Turn ignition switch OFF.
2. Check harness continuity between ignition coil terminal 2 and ground.
   Refer to Wiring Diagram.

   Continuity should exist.

3. Also check harness for short to power.

OK or NG

OK >> GO TO 13.
NG >> Repair open circuit or short to power in harness or connectors.

13. CHECK IGNITION COIL OUTPUT SIGNAL CIRCUIT FOR OPEN AND SHORT

1. Disconnect ECM harness connector.
2. Check harness continuity between ECM terminals 17, 18, 21, 22 and ignition coil terminal 3.
   Refer to Wiring Diagram.

   Continuity should exist.

3. Also check harness for short to ground and short to power.

OK or NG

OK >> GO TO 14.
NG >> Repair open circuit or short to ground or short to power in harness or connectors.

14. CHECK IGNITION COIL WITH POWER TRANSISTOR

Refer to EC-1588, "Component Inspection" .

OK or NG

OK >> GO TO 15.
NG >> Replace ignition coil with power transistor.

15. CHECK INTERMITTENT INCIDENT

Refer to EC-1336, "TROUBLE DIAGNOSIS FOR INTERMITTENT INCIDENT" .

>> **INSPECTION END**

Component Inspection

BBS004SW

IGNITION COIL WITH POWER TRANSISTOR

CAUTION:

Do the following procedure in the place where ventilation is good without the combustible.

1. Turn ignition switch OFF.
2. Disconnect ignition coil harness connector.
3. Check resistance between ignition coil terminals as follows.

Terminal No. (Polarity)	Resistance Ω [at 25°C (77°F)]
1 and 2	Except 0 or ∞
1 and 3	Except 0
2 and 3	

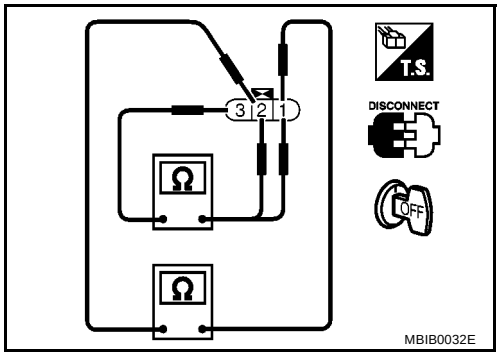

4. If NG, replace ignition coil with power transistor.
   If OK, go to next step.
5. Turn ignition switch OFF.
6. Reconnect all harness connectors disconnected.

7. Remove fuel pump fuse in IPDM E/R to release fuel pressure.

   NOTE:
   Do not use CONSULT-II to release fuel pressure, or fuel pressure applies again during the following procedure.

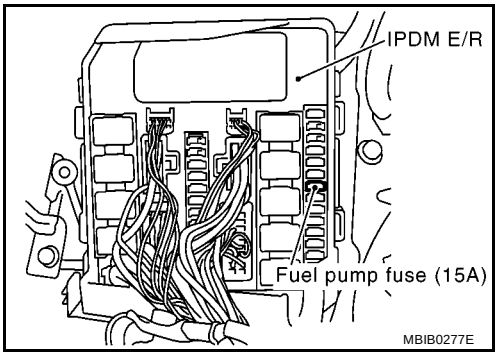

8. Start engine.
9. After engine stalls, crank it two or three times to release all fuel pressure.
10. Turn ignition switch OFF.
11. Remove all ignition coil harness connectors to avoid the electrical discharge from the ignition coils.
12. Remove ignition coil and spark plug of the cylinder to be checked.
13. Crank engine for 5 seconds or more to remove combustion gas in the cylinder.
14. Connect spark plug and harness connector to ignition coil.
15. Fix ignition coil using a rope etc. with gap of 13 - 17 mm between the edge of the spark plug and grounded metal portion as shown in the figure.
16. Crank engine for about three seconds, and check whether spark is generated between the spark plug and the grounded metal portion.

    Spark should be generated.

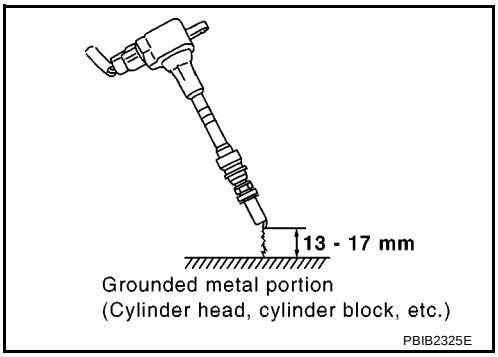

    CAUTION:
    - **Do not approach to the spark plug and the ignition coil within 50cm. Be careful not to get an electrical shock while checking, because the electrical discharge voltage becomes 20kV or more.**
    - **It might cause to damage the ignition coil if the gap of more than 17 mm is taken.**

    NOTE:
    When the gap is less than 13 mm, the spark might be generated even if the coil is malfunctioning.

17. If NG, replace ignition coil with power transistor.

CONDENSER

1. Turn ignition switch OFF.
2. Disconnect condenser harness connector.
3. Check resistance between condenser terminals 1 and 2.

   Resistance: Above 1 MΩ at 25°C (77°F)

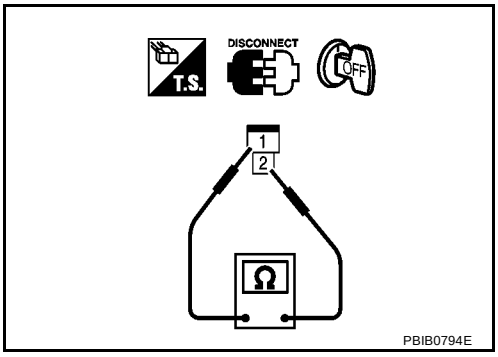

Removal and Installation

BBS004SX

IGNITION COIL WITH POWER TRANSISTOR

Refer to EM-132, "IGNITION COIL" .

REFRIGERANT PRESSURE SENSOR

PFP:92136

Component Description

BBS004SY

The refrigerant pressure sensor (1) is installed at the condenser of the air conditioner system. The sensor uses an electrostatic volume pressure transducer to convert refrigerant pressure to voltage. The voltage signal is sent to ECM, and ECM controls cooling fan system.

- ⇦: Vehicle front

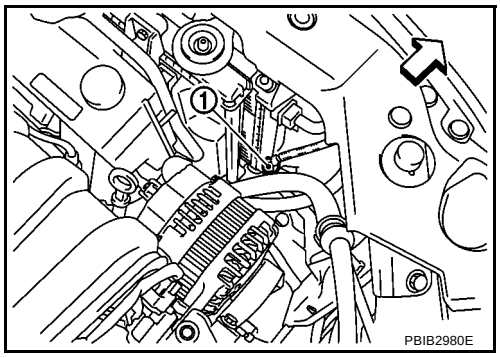

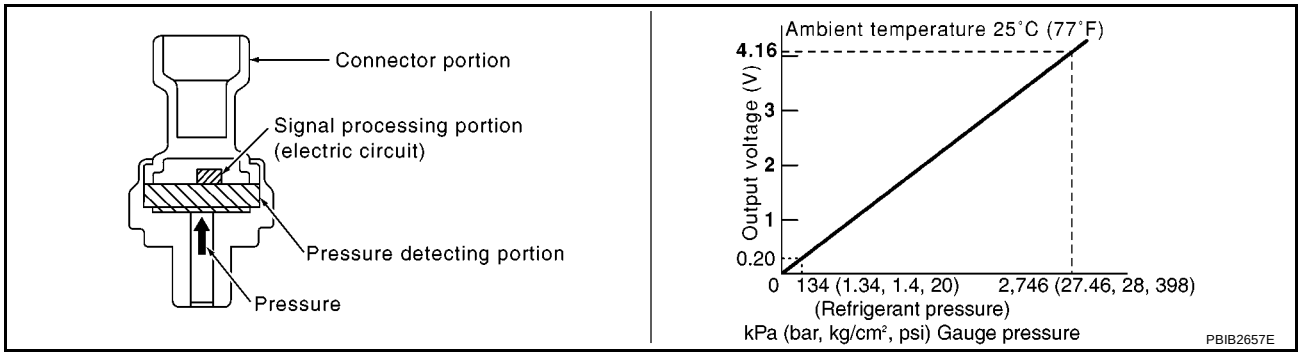

Wiring Diagram

BBS004SZ

EC-RP/SEN-01

: DETECTABLE LINE FOR DTC
: NON-DETECTABLE LINE FOR DTC

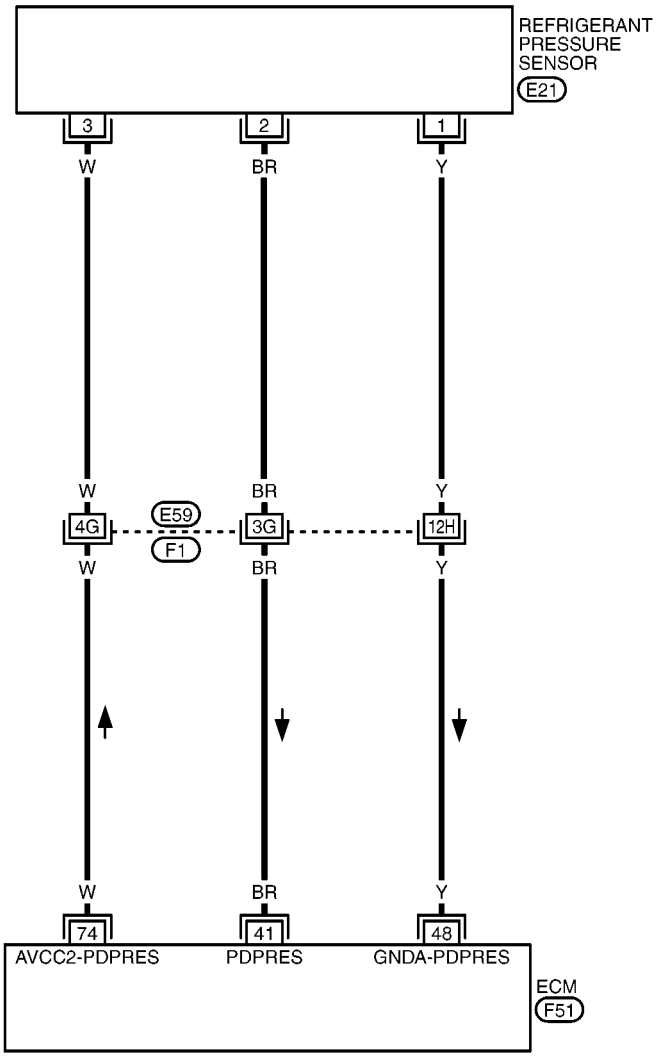

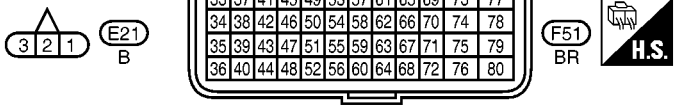

REFER TO THE FOLLOWING.
F1 - SUPER MULTIPLE JUNCTION (SMJ)

MBWA1493E

Specification data are reference values and are measured between each terminal and ground.

CAUTION:

Do not use ECM ground terminals when measuring input/output voltage. Doing so may result in damage to the ECM's transistor. Use a ground other than ECM terminals, such as the ground.

TERMINAL NO.	WIRE COLOR	ITEM	CONDITION	DATA (DC Voltage)
41	BR	Refrigerant pressure sensor	**[Engine is running]** ● **Warm-up condition** ● Both A/C switch and blower fan switch: ON (Compressor operates)	1.0 - 4.0V
48	Y	Sensor ground (Refrigerant pressure sensor)	**[Engine is running]** ● **Warm-up condition** ● Idle speed	Approximately 0V
74	W	Sensor power supply (Refrigerant pressure sensor)	**[Ignition switch: ON]**	Approximately 5V

Diagnostic Procedure

BBS004T0

1. CHECK REFRIGERANT PRESSURE SENSOR OVERALL FUNCTION

1. Start engine and warm it up to normal operating temperature.
2. Turn A/C switch and blower fan switch ON.
3. Check voltage between ECM terminal 41 and ground with CONSULT-II or tester.

Voltage: 1.0 - 4.0V

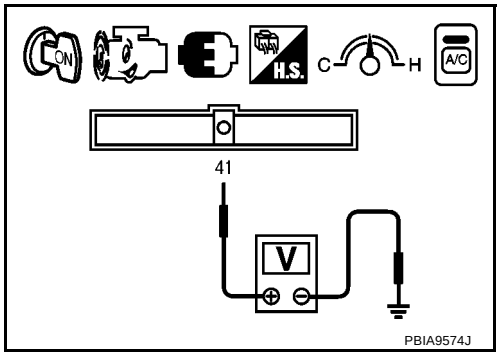

OK or NG

OK >> **INSPECTION END**
NG >> GO TO 2.

2. CHECK GROUND CONNECTIONS

1. Turn A/C switch and blower fan switch OFF.
2. Stop engine.
3. Loosen and retighten ground screws on the body.
Refer to EC-1342, "Ground Inspection" .

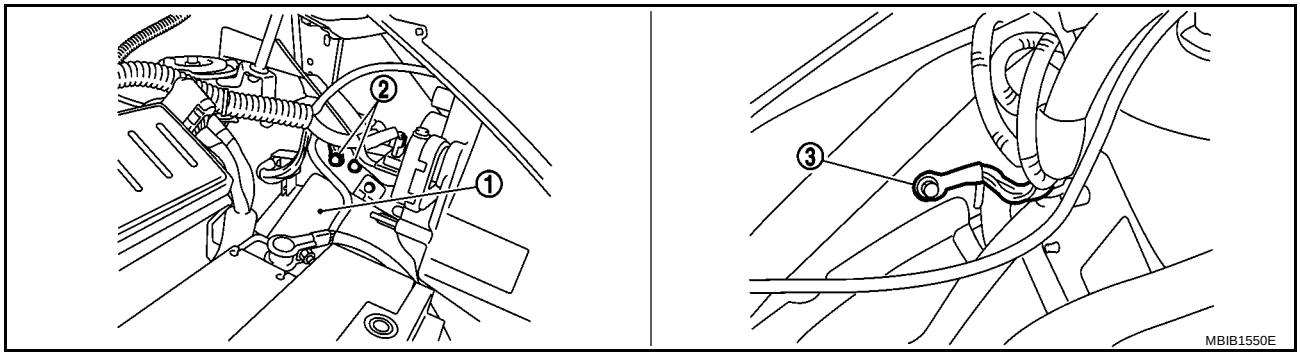

1. IPDM E/R
2. Body ground
3. Body ground

OK or NG

OK >> GO TO 3.
NG >> Repair or replace ground connections.

3. CHECK REFRIGERANT PRESSURE SENSOR POWER SUPPLY CIRCUIT

1. Disconnect refrigerant pressure sensor (1) harness connector.
- ⇦: Vehicle front
2. Turn ignition switch ON.

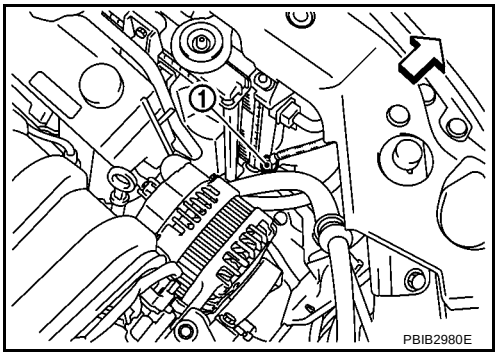

3. Check voltage between refrigerant pressure sensor terminal 3 and ground with CONSULT-II or tester.

Voltage: Approximately 5V

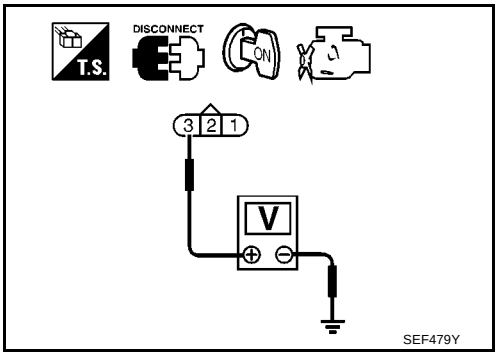

OK or NG

OK >> GO TO 5.
NG >> GO TO 4.

4. DETECT MALFUNCTIONING PART

Check the following.
- Harness connectors E59, F1
- Harness for open or short between refrigerant pressure sensor and ECM

>> Repair open circuit or short to ground or short to power in harness or connectors.

5. CHECK REFRIGERANT PRESSURE SENSOR GROUND CIRCUIT FOR OPEN AND SHORT

1. Turn ignition switch OFF.
2. Disconnect ECM harness connector.
3. Check harness continuity between refrigerant pressure sensor terminal 1 and ECM terminal 48. Refer to Wiring Diagram.

Continuity should exist.

4. Also check harness for short to ground and short to power.

OK or NG

OK >> GO TO 7.
NG >> GO TO 6.

6. DETECT MALFUNCTIONING PART

Check the following.
- Harness connectors E59, F1
- Harness for open or short between refrigerant pressure sensor and ECM

>> Repair open circuit or short to ground or short to power in harness or connectors.

7. CHECK REFRIGERANT PRESSURE SENSOR INPUT SIGNAL CIRCUIT FOR OPEN AND SHORT

1. Check harness continuity between refrigerant pressure sensor terminal 2 and ECM terminal 41.
   Refer to Wiring Diagram.

   Continuity should exist.

2. Also check harness for short to ground and short to power.

OK or NG

OK >> GO TO 9.
NG >> GO TO 8.

8. DETECT MALFUNCTIONING PART

Check the following.

- Harness connectors E59, F1
- Harness for open or short between refrigerant pressure sensor and ECM

>> Repair open circuit or short to ground or short to power in harness or connectors.

9. CHECK INTERMITTENT INCIDENT

Refer to EC-1336, "TROUBLE DIAGNOSIS FOR INTERMITTENT INCIDENT" .

OK or NG

OK >> Replace refrigerant pressure sensor.
NG >> Repair or replace.

Removal and Installation

BBS004T1

REFRIGERANT PRESSURE SENSOR

Refer to ATC-135, "REFRIGERANT LINES" or MTC-81, "REFRIGERANT LINES" .

VSS

PFP:32702

Description

BBS004T2

The vehicle speed signal is sent to the combination meter from the “ABS actuator and electric unit (control unit)” by CAN communication line. The combination meter then sends a signal to the ECM by CAN communication line.

Diagnostic Procedure

BBS004T3

1. INSPECTION START

Do you have CONSULT-II?

Yes or No

Yes >> GO TO 2.
No >> GO TO 3.

2. CHECK OVERALL FUNCTION

1. Turn ignition switch OFF.
2. Lift up the vehicle.
3. Start engine and let it idle.
4. Select “VHCL SPEED SE” in “DATA MONITOR” mode with CONSULT-II.
5. Select “VHCL SPEED SE” indication when rotating wheels with suitable gear position.

“VHCL SPEED SE” indication should exceed 10 km/h (6 MPH).

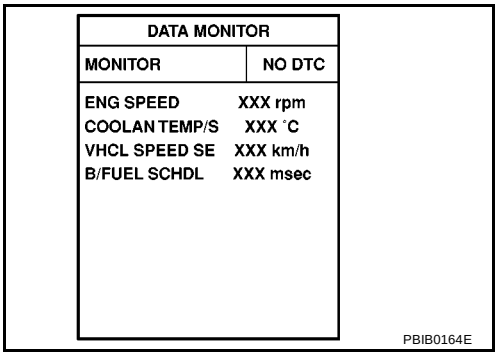

OK or NG

OK >> **INSPECTION END**
NG >> GO TO 3.

3. CHECK DTC WITH “ABS ACTUATOR AND ELECTRIC UNIT (CONTROL UNIT)”

Refer to BRC-8, "TROUBLE DIAGNOSIS" or BRC-49, "TROUBLE DIAGNOSIS" .

OK or NG

OK >> GO TO 4.
NG >> Repair or replace.

4. CHECK COMBINATION METER FUNCTION

Refer to DI-4, "COMBINATION METERS" .

>> **INSPECTION END**

MI & DATA LINK CONNECTORS

PFP:24814

Wiring Diagram

BBS004T4

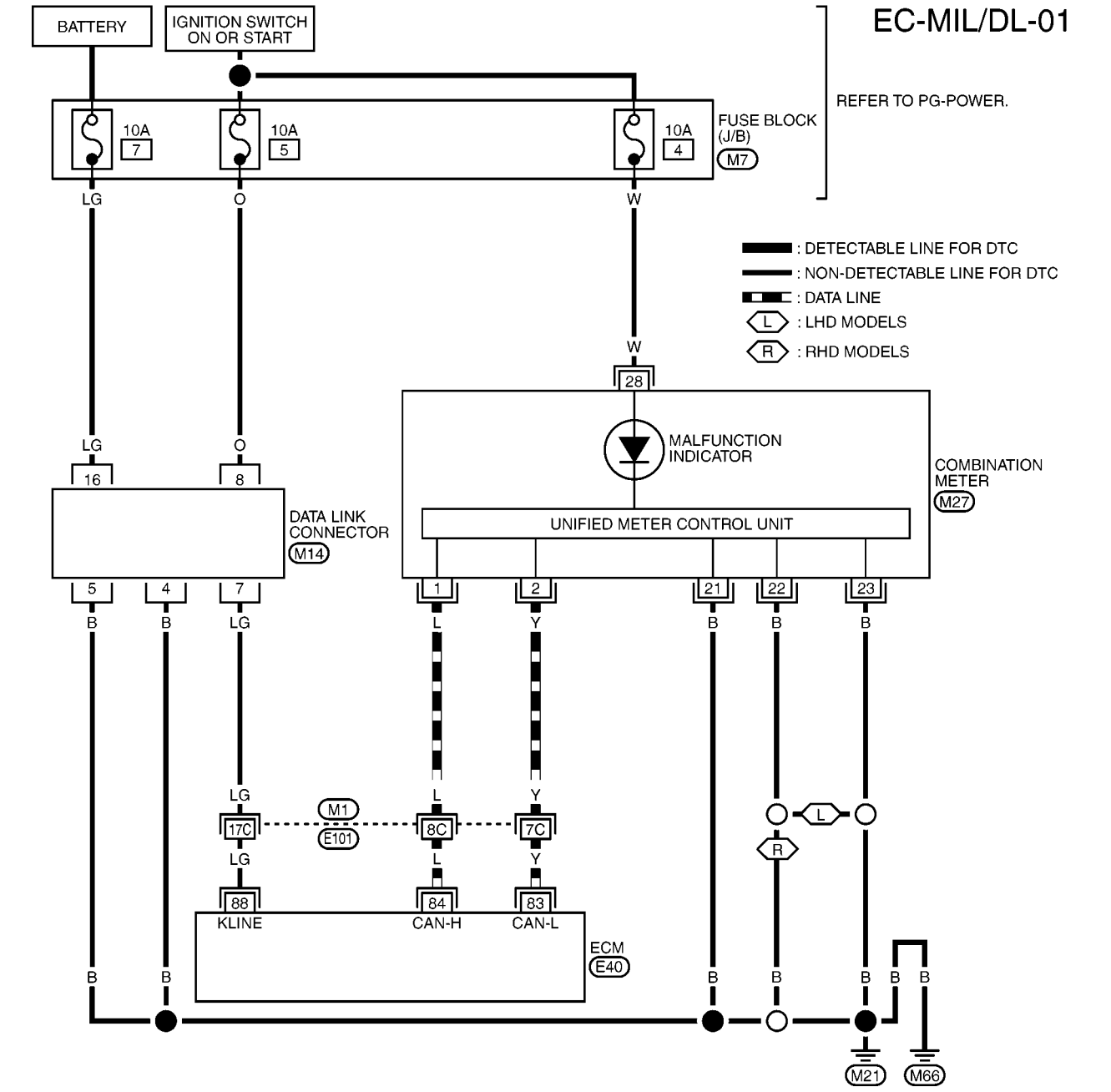

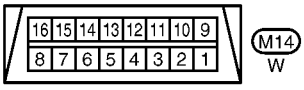

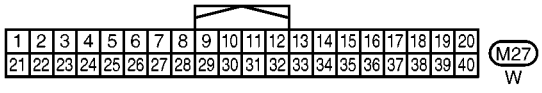

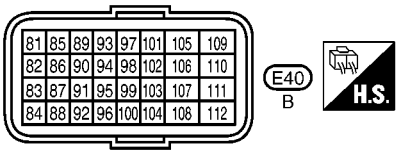

REFER TO THE FOLLOWING.
M1 - SUPER MULTIPLE JUNCTION (SMJ)
M7 - FUSE BLOCK - JUNCTION BOX (J/B)

MBWA1494E

SERVICE DATA AND SPECIFICATIONS (SDS)

PFP:00030

Fuel Pressure

BBS004T5

Fuel pressure at idle	Approximately 350 kPa (3.5 bar, 3.57 kg/cm^2 , 51 psi)

Idle Speed and Ignition Timing

BBS004T6

Target idle speed	A/T	No load* (in P or N position)	700 ± 50 rpm
	M/T	No load* (in Neutral position)	650 ± 50 rpm
Air conditioner: ON	A/T	In P or N position	700 rpm or more
	M/T	In Neutral position	750 rpm or more
Ignition timing	A/T	In P or N position	6 ± 5° BTDC
	M/T	In Neutral position	

*: Under the following conditions:

- Air conditioner switch: OFF
- Electric load: OFF (Lights, heater fan & rear window defogger)
- Steering wheel: Kept in straight-ahead position

Mass Air Flow Sensor

BBS004T7

Supply voltage	Battery voltage (11 - 14V)
Output voltage at idle	1.0 - 1.3*V

*: Engine is warmed up to normal operating temperature and running under no load.

Intake Air Temperature Sensor

BBS004T8

Temperature °C (°F)	Resistance kΩ
25 (77)	1.800 - 2.200
80 (176)	0.283 - 0.359

Engine Coolant Temperature Sensor

BBS004T9

Temperature °C (°F)	Resistance kΩ
20 (68)	2.1 - 2.9
50 (122)	0.68 - 1.00
90 (194)	0.236 - 0.260

Knock Sensor

BBS00587

Resistance [at 20°C (68°F)]	Approximately 530 – 590kΩ

Heated Oxygen Sensor 1 Heater

BBS004TA

Resistance [at 25°C (77°F)]	3.4 - 4.4Ω

Heated Oxygen sensor 2 Heater

BBS004TB

Resistance [at 25°C (77°F)]	3.4 - 4.4Ω

Crankshaft Position Sensor (POS)

BBS004TC

Refer to EC-1412, "Component Inspection" .

Camshaft Position Sensor (PHASE)

BBS004TD

Refer to EC-1418, "Component Inspection" .

Intake Valve Timing Control Solenoid Valve

BBS00588

Resistance [at 20°C (68°F)]	6.7 – 7.7Ω

Throttle Control Motor

BBS004TE

Resistance [at 25°C (77°F)]	Approximately 1 - 15Ω

Fuel Injector

BBS004TF

Resistance [at 10 - 60°C (50 - 140°F)]	11.1 - 14.5Ω

Fuel Pump

BBS004TG

Resistance [at 25°C (77°F)]	Approximately 0.2 - 5.0Ω

INDEX FOR DTC

PFP:00024

DTC No. Index

BBS003ZX

X: Applicable —: Not applicable

DTC*1 *2	Items (CONSULT-II screen item)	Trip	MI lighting up		Reference page
			Red	Yellow	
PC001	MULTIPLXD NETWORK	3	×		EC-1705
P0016	COHERENCE CMSFT/SN	3			EC-1708
P0045	TURBO ACT CIRC	3	×		EC-1710
P0070	AIR TEMP SEN CIRC	3			EC-1715
P0087	FLOW CAPACITY	3	×		EC-1719
P0089	RAIL PRESS REGULTN	3	×		EC-1721
P0100	AIR FLOW SEN CIRC	3			EC-1722
P0115	WATER TMP SEN CIRC	3			EC-1727
P0170	INJECTOR CODE PROG	3			EC-1731
P0180	FUEL TEMP SEN CIRC	3			EC-1732
P0190	RAIL/PRESS SEN CIR	3	×		EC-1736
P0200	INJECTOR CTRL CIRC	3	×		EC-1740
P0201	CYL 1 INJ CTRL CIR	3	×	×	EC-1745
P0202	CYL 2 INJ CTRL CIR	3	×	×	EC-1745
P0203	CYL 3 INJ CTRL CIR	3	×	×	EC-1745
P0204	CYL 4 INJ CTRL CIR	3	×	×	EC-1745
P0225	PDL POTEN CIRC TK1	3	×		EC-1751
P0231	L/PR ACTR CTRL CIR	3	×		EC-1759
P0235	IN-MANI PRES CIRC	3	×		EC-1763
P0263	MISFIRE ON CYL 1	3	×		EC-1768
P0266	MISFIRE ON CYL 2	3	×		EC-1768
P0269	MISFIRE ON CYL 3	3	×		EC-1768
P0272	MISFIRE ON CYL 4	3	×		EC-1768
P0325	ACCELEROMETER CIRC	3			EC-1770
P0335	ENGNE SPD SEN CIRC	3	×		EC-1774
P0340	CAMSHAFT SEN CIRC	3			EC-1778
P0380	PRHT DGNSTC CNECT	3			EC-1784
P0382	PRHT UNIT CTRL CIR	3			EC-1788
P0400	EGR SOL/VLV CIRC	3	×	×	EC-1791
P0403	EGR COMMAND CIRC	3	×	×	EC-1795
P0409	EGR POIFTN SEN CIR	3			EC-1800
P0487	EGR POSITN OFFSET	3		×	EC-1805
P0500	VEHL/SPD INF CIRC	3			EC-1810
P0513	ENGINE IMMOBILIZER	3			BL-215
P0530	REFRIGERNT SEN CIR	3			EC-1811
P0560	CPU SUPPLY VOLTAGE	3	×		EC-1816
P0571	BRAKE SWITCH CIRC	3			EC-1820
P0604	ECU MEMORY	3	×		EC-1825
P0606	COMPUTER(C/U)	3	×		EC-1826
P062F	MEMORY SAVED	3	×	×	EC-1828

DTC*1 *2	Items (CONSULT-II screen item)	Trip	MI lighting up		Reference page
			Red	Yellow	
P0641	SEN SUPPLY N-1 VOL	3	×		EC-1830
P0651	SEN SUPPLY N-2 VOL	3	×		EC-1837
P0685	MAIN RLY CTRL CIRC	3			EC-1845
P0703	BRAKE INFORMATION	3			EC-1850
P2120	PDL POTEN CIRC TK2	3	×		EC-1855
P2226	ATMOS PRES ASE CIR	3			EC-1863

*1: 1st trip DTC No. and 2nd trip DTC No. are the same as DTC No.
*2: This number is prescribed by ISO 15031-6.

Alphabetical Index

BBS003ZW

X: Applicable —: Not applicable

Items (CONSULT-II screen item)	DTC*1 *2	Trip	MI lighting up		Reference page
			Red	Yellow	
ACCELEROMETER CIRC	P0325	3			EC-1770
AIR FLOW SEN CIRC	P0100	3			EC-1722
AIR TEMP SEN CIRC	P0070	3			EC-1715
ATMOS PRES ASE CIR	P2226	3			EC-1863
BRAKE INFORMATION	P0703	3			EC-1850
BRAKE SWITCH CIRC	P0571	3			EC-1820
CAMSHAFT SEN CIRC	P0340	3			EC-1778
COHERENCE CMSFT/SN	P0016	3			EC-1708
COMPUTER(C/U)	P0606	3	×		EC-1826
CPU SUPPLY VOLTAGE	P0560	3	×		EC-1816
CYL 1 INJ CTRL CIR	P0201	3	×	×	EC-1745
CYL 2 INJ CTRL CIR	P0202	3	×	×	EC-1745
CYL 3 INJ CTRL CIR	P0203	3	×	×	EC-1745
CYL 4 INJ CTRL CIR	P0204	3	×	×	EC-1745
ECU MEMORY	P0604	3	×		EC-1825
EGR COMMAND CIRC	P0403	3	×	×	EC-1795
EGR POIFTN SEN CIR	P0409	3			EC-1800
EGR POSITN OFFSET	P0487	3		×	EC-1805
EGR SOL/VLV CIRC	P0400	3	×	×	EC-1791
ENGINE IMMOBILIZER	P0513	3			BL-215
ENGNE SPD SEN CIRC	P0335	3	×		EC-1774
FLOW CAPACITY	P0087	3	×		EC-1719
FUEL TEMP SEN CIRC	P0180	3			EC-1732
INJECTOR CODE PROG	P0170	3			EC-1731
INJECTOR CTRL CIRC	P0200	3	×		EC-1740
IN-MANI PRES CIRC	P0235	3	×		EC-1763
L/PR ACTR CTRL CIR	P0231	3	×		EC-1759
MAIN RLY CTRL CIRC	P0685	3			EC-1845
MEMORY SAVED	P062F	3	×	×	EC-1828
MISFIRE ON CYL 1	P0263	3	×		EC-1768
MISFIRE ON CYL 2	P0266	3	×		EC-1768
MISFIRE ON CYL 3	P0269	3	×		EC-1768
MISFIRE ON CYL 4	P0272	3	×		EC-1768
MULTIPLXD NETWORK	PC001	3	×		EC-1705
PDL POTEN CIRC TK1	P0225	3	×		EC-1751
PDL POTEN CIRC TK2	P2120	3	×		EC-1855
PRHT DGNSTC CNECT	P0380	3			EC-1784
PRHT UNIT CTRL CIR	P0382	3			EC-1788
RAIL PRESS REGULTN	P0089	3		×	EC-1721
RAIL/PRESS SEN CIR	P0190	3		×	EC-1736
REFRIGERNT SEN CIR	P0530	3		×	EC-1811

Items (CONSULT-II screen item)	DTC*1 *2	Trip	MI lighting up		Reference page
			Red	Yellow	
SEN SUPPLY N-1 VOL	P0641	3		×	EC-1830
SEN SUPPLY N-2 VOL	P0651	3		×	EC-1837
TURBO ACT CIRC	P0045	3		×	EC-1710
VEHL/SPD INF CIRC	P0500	3		×	EC-1810
WATER TMP SEN CIRC	P0115	3		×	EC-1727

*1: 1st trip DTC No. and 2nd trip DTC No. are the same as DTC No.
*2: This number is prescribed by ISO 15031-6.

PRECAUTIONS

PFP:00001

Precautions for Supplemental Restraint System (SRS) “AIR BAG” and “SEAT BELT PRE-TENSIONER”

BBS003ZY

The Supplemental Restraint System such as “AIR BAG” and “SEAT BELT PRE-TENSIONER”, used along with a front seat belt, helps to reduce the risk or severity of injury to the driver and front passenger for certain types of collision. Information necessary to service the system safely is included in the SRS and SB section of this Service Manual.

WARNING:

- **To avoid rendering the SRS inoperative, which could increase the risk of personal injury or death in the event of a collision which would result in air bag inflation, all maintenance must be performed by an authorized NISSAN/INFINITI dealer.**
- **Improper maintenance, including incorrect removal and installation of the SRS, can lead to personal injury caused by unintentional activation of the system. For removal of Spiral Cable and Air Bag Module, see the SRS section.**
- **Do not use electrical test equipment on any circuit related to the SRS unless instructed to in this Service Manual. SRS wiring harnesses can be identified by yellow and/or orange harnesses or harness connectors.**

Maintenance Information

BBS005AU

If any of following part is replaced, always replace with new* one.
If it's not (or fail to do so), the electrical system may not be operated properly.
*: New one means a virgin control unit that has never been energized on-board.

RHD MODELS

- BCM (Models without Intelligent Key system)
- Intelligent Key unit (Models with Intelligent Key system)
- ECM
- IPDM E/R
- Combination meter
- EPS control unit

LHD MODELS

- BCM (Models without Intelligent Key system)
- Intelligent Key unit (Models with Intelligent Key system)
- ECM

Precautions for Procedures without Cowl Top Cover

BBS00589

When performing the procedure after removing cowl top cover, cover the lower end of windshield with urethane, etc.

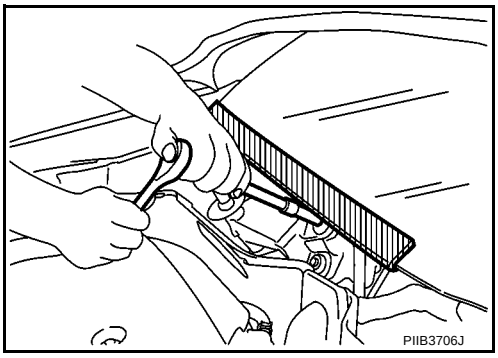

On Board Diagnostic (OBD) System of Engine

BBS003ZZ

The ECM has an on board diagnostic system. It will light up the malfunction indicator (MI) to warn the driver of a malfunction causing emission deterioration.

CAUTION:

- **Be sure to turn the ignition switch OFF and disconnect the battery negative cable before any repair or inspection work. The open/short circuit of related switches, sensors, solenoid valves, etc. will cause the MI to light up.**

- Be sure to connect and lock the connectors securely after work. A loose (unlocked) connector will cause the MI to light up due to the open circuit. (Be sure the connector is free from water, grease, dirt, bent terminals, etc.)
- Certain systems and components, especially those related to OBD, may use a new style slide-locking type harness connector. For description and how to disconnect, refer to PG-88, "HARNESS CONNECTOR" .
- Be sure to route and secure the harnesses properly after work. The interference of the harness with a bracket, etc. may cause the MI to light up due to the short circuit.
- Be sure to connect rubber tubes properly after work. A misconnected or disconnected rubber tube may cause the MI to light up due to the malfunction of the fuel system, etc.
- Be sure to erase the unnecessary malfunction information (repairs completed) from the ECM before returning the vehicle to the customer.

Precautions

BBS00400

- Always use a 12 volt battery as power source.
- Do not attempt to disconnect battery cables while engine is running.
- Before connecting or disconnecting the ECM harness connector, turn ignition switch OFF and disconnect battery negative cable. Failure to do so may damage the ECM because battery voltage is applied to ECM even if ignition switch is turned OFF.
- Before removing parts, turn ignition switch OFF and then disconnect battery negative cable.

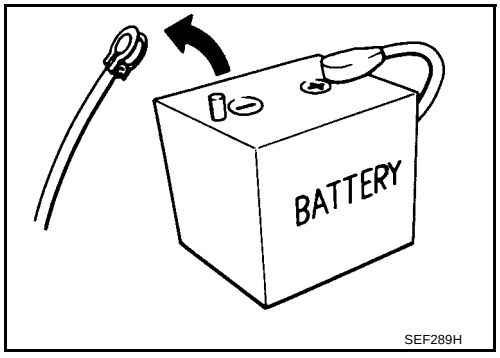

SEF289H

- Do not disassemble ECM.

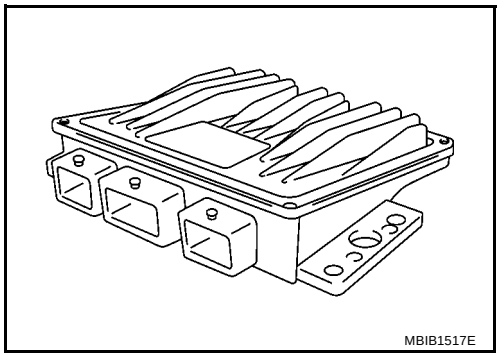
MBIB1517E

- When connecting ECM harness connector, fasten (A) it securely with levers (1) as far as they will go as shown in the figure.
  - ECM (2)
  - Loosen (B)

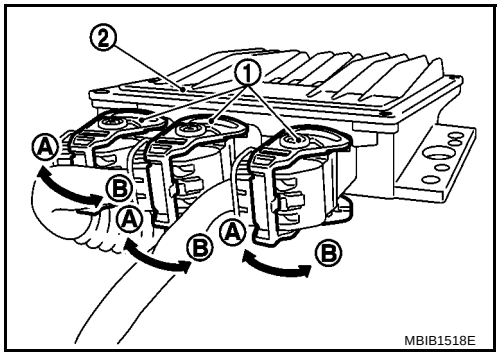

MBIB1518E

- When connecting or disconnecting pin connectors into or from ECM, take care not to damage pin terminals (bend or break).
  Make sure that there are not any bends or breaks on ECM pin terminal, when connecting pin connectors.
- Securely connect ECM harness connectors.
  A poor connection can cause an extremely high (surge) voltage to develop in coil and condenser, thus resulting in damage to IC's.
- Keep engine control system harness at least 10cm (4 in) away from adjacent harness, to prevent engine control system malfunctions due to receiving external noise, degraded operation of IC's, etc.

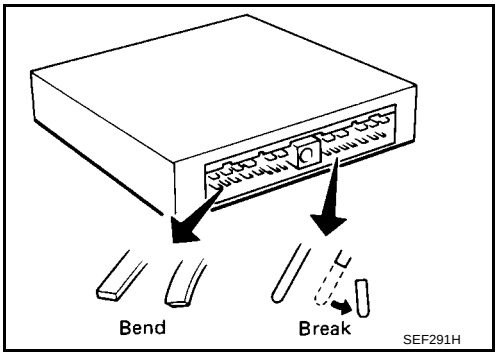

- Keep engine control system parts and harness dry.
- Handle mass air flow sensor carefully to avoid damage.
- Do not disassemble mass air flow sensor.
- Do not clean mass air flow sensor with any type of detergent.
- Even a slight leak in the air intake system can cause serious incidents.
- Do not shock or jar the camshaft position sensor, crankshaft position sensor.
- When measuring ECM signals with a circuit tester, never allow the two tester probes to contact.
  Accidental contact of probes will cause a short circuit and damage the ECM power transistor.
- Do not use ECM ground terminals when measuring input/output voltage. Doing so may result in damage to the ECM's transistor. Use a ground other than ECM terminals, such as the ground.
- Do not disassemble fuel pump.
  If NG, take proper action.
- Do not disassemble fuel injector.
  If NG, replace fuel injector.

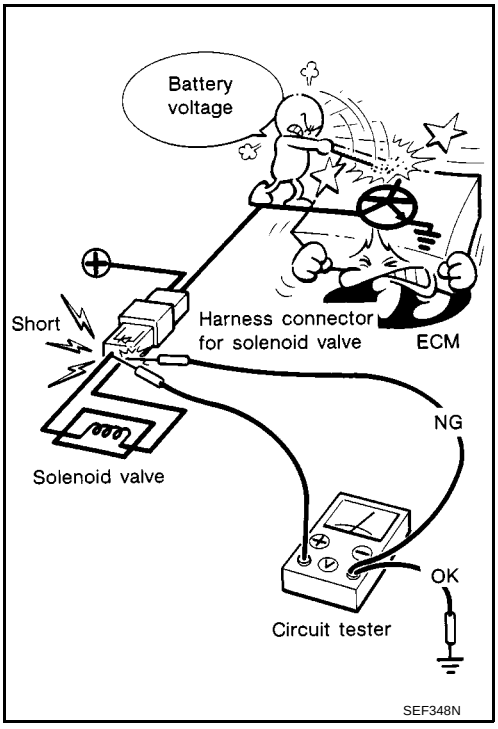

- Do not depress accelerator pedal when staring.
- Immediately after staring, do not rev up engine unnecessarily.
- Do not rev up engine just prior to shutdown.

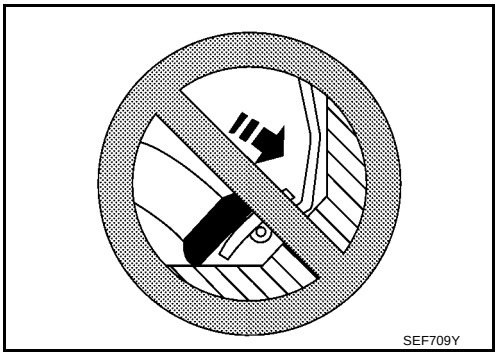

- **When installing C.B. ham radio or a mobile phone, be sure to observe the following as it may adversely affect electronic control systems depending on installation location.**
  - **Keep the antenna as far as possible from the electronic control units.**
  - **Keep the antenna feeder line more than 20 cm (8 in) away from the harness of electronic controls.**
    Do not let them run parallel for a long distance.
  - **Adjust the antenna and feeder line so that the standingwave radio can be kept smaller.**
  - **Be sure to ground the radio to vehicle body.**

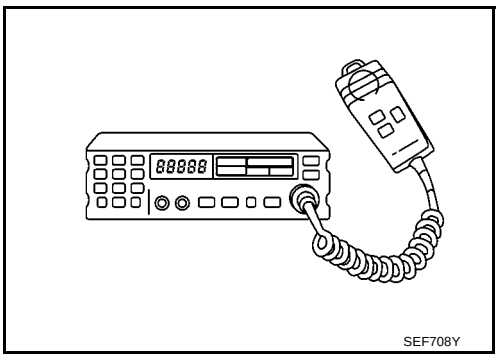

Cleanliness

BBS004TI

CLEANLINESS INSTRUCTIONS WHICH MUST BE FOLLOWED WHEN WORKING ON THE HIGH PRESSURE DIRECT INJECTION SYSTEM

Risks Relating to Contamination

The system is very sensitive to contamination. The risks caused by the introduction of contamination are:

- Damage or destruction of the high pressure injection system and the engine
- Seizing or leaking of a component

All After-Sales operations must be performed under very clean conditions. This means that no impurities (particles a few microns in size) get into the system during dismantling or into the circuits via the fuel unions.
The cleanliness principle must be applied from the filter to the fuel injectors.

WHAT ARE THE SOURCES OF CONTAMINATION?

Contamination is caused by:

- Metal or plastic chips
- Paint
- fibres:
  - Boxes
  - Brushes
  - Paper
  - Clothing
  - Cloths
- Foreign bodies such as hair
- Ambient air
- etc

IMPORTANT: It is not possible to clean the engine using a high pressure washer because of the risk of damaging connections. In addition, moisture may collect in the connectors and create electrical connection malfunctions.

INSTRUCTIONS TO BE FOLLOWED BEFORE ANY WORK IS CARRIED OUT ON THE INJECTION SYSTEM

- Ensure that you have the plugs for the unions to be opened (bag of plugs sold at the Parts Store - Nissan part No.: 16830 BN700, Renault part No.: 77 01 206 804). Plugs are to be used once only. After use, they must be thrown away (once used they are soiled and cleaning is not sufficient to make them reusable). Unused plugs must be thrown away.
- Ensure that you have hermetically resealable plastic bags for storing removed parts. Stored parts will therefore be less subject to the risk of impurities. The bags must be used only once, and after use they must be thrown away.
- Lint-free towelettes to be used for injection pump related service purpose. The use of a normal cloth or paper for cleaning purposes is forbidden. These are not lint-free and may contaminate the fuel circuit of the system. Each lint-free cloth should only be used once.

INSTRUCTIONS TO BE FOLLOWED BEFORE OPENING THE FUEL CIRCUIT

- For each operation, use new thinner (used thinner contains impurities). Pour it into a clean receptacle.
- For each operation, use a clean brush which is in good condition (the brush must not shed its bristles).

- Use a brush and thinners to clean the connections to be opened.
- Blow compressed air over the cleaned parts (tools, cleaned the same way as the parts, connections and injection system zone). Check that no bristles remain adhered.
- Wash your hands before and during the operation if necessary.
- When wearing leather protective gloves, cover these with latex gloves.

INSTRUCTIONS TO BE FOLLOWED DURING THE OPERATION

- As soon as the circuit is open, all openings must be plugged to prevent impurities from entering the system. The plugs to be used are available from the Parts Stores - Nissan part No.: 16830 BN700, Renault part No.: 77 01 206 804. They must not, under any circumstances, be reused.
- Close the hermetically sealed bag, even if it has to be reopened shortly afterwards. Ambient air carries contamination.
- All components of the injection system that are removed must be stored in a hermetically sealed plastic bag once the plugs have been inserted.
- The use of a brush, thinner, bellows, sponge or normal cloth is strictly forbidden once the circuit has been opened. These items are likely to allow impurities to enter the system.
- A new component replacing an old one must not be removed from its packaging until it is to be fitted to the vehicle.

Instructions for Fitting The Plugs

Nissan part number: 16830 BN700
(Renault part number: 77 01 206 804)

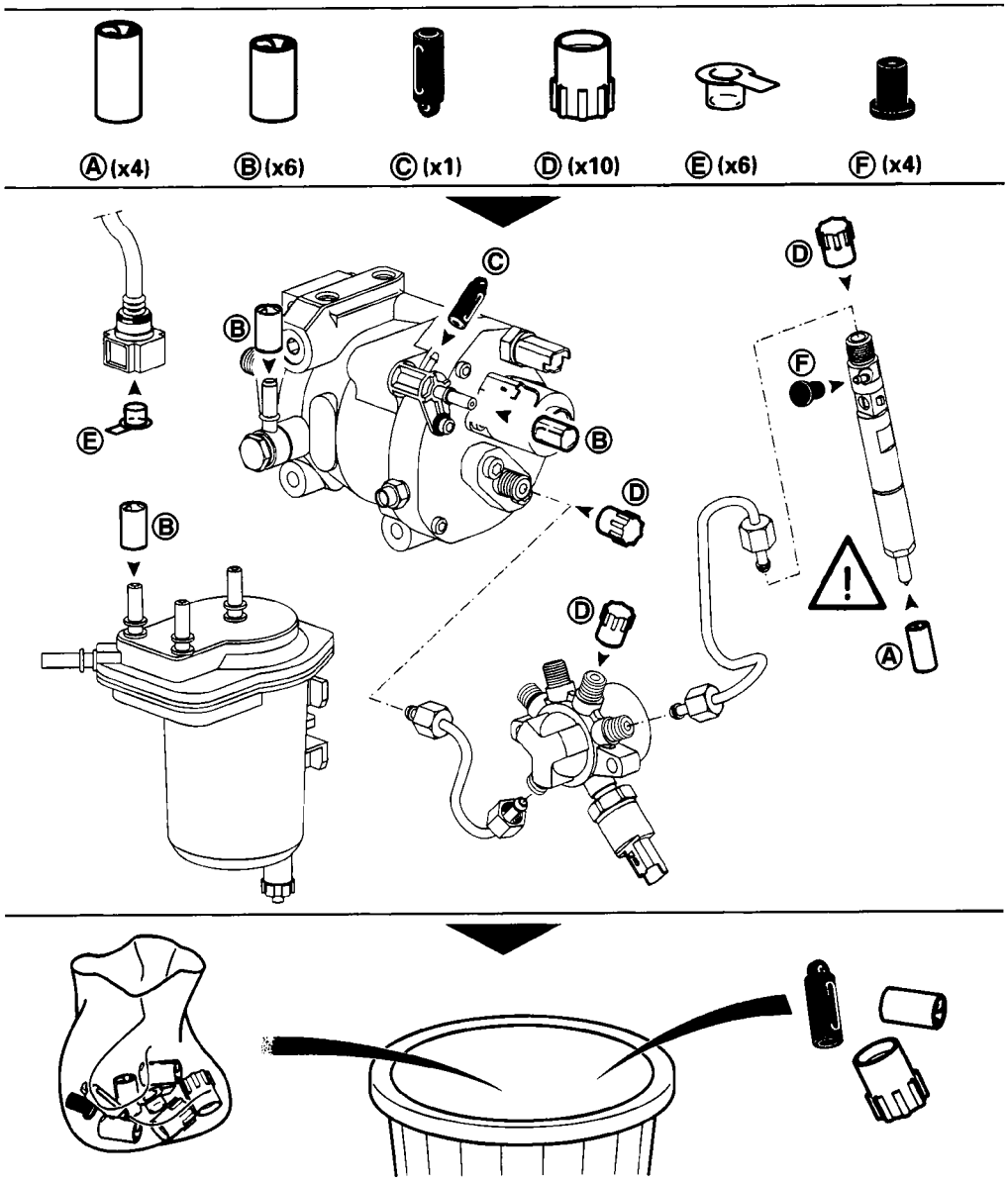

MBIB0321E

CAUTION:

- **The engine must not run with:**
  - **Diesel containing more than 10% diester**
  - **Gasoline, even in very small amounts.**
- **The system can inject the fuel into the engine at a pressure of up to 140,000 kPa (1,400 bar, 1,428 kg/cm^2 , 20,300 psi). Before carrying out any work, check that the fuel rail is no longer pressurized and that the fuel temperature is not too high.**
- **You must respect the cleaning and safety advice specified in this document for any work on the high pressure injection system.**

ENGINE CONTROL SYSTEM

PFP:23710

System Diagram

BBS00403

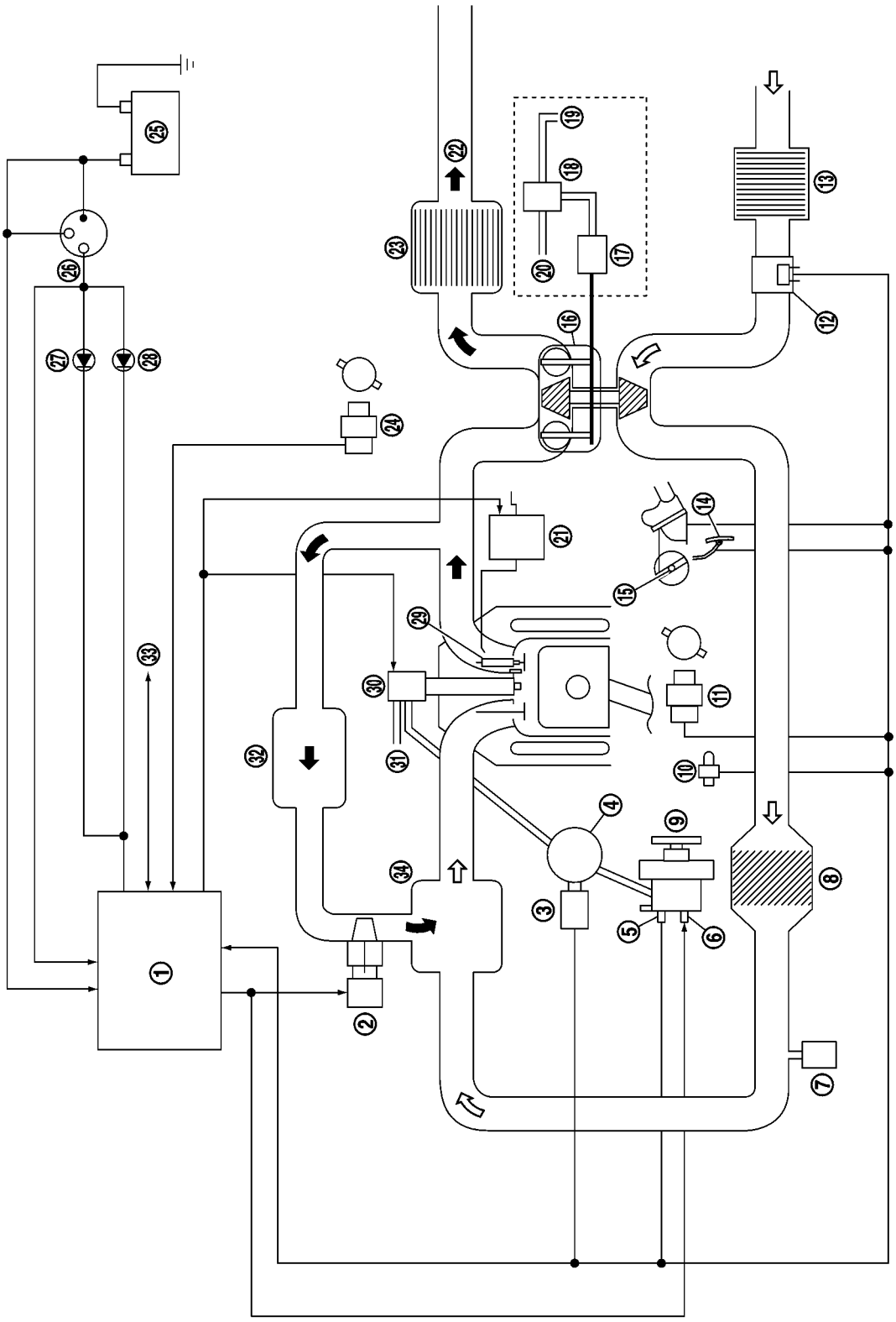

MBIB1473E

1. ECM
2. EGR volume control valve
3. Fuel rail pressure sensor
4. Fuel rail
5. Fuel pump temperature sensor
6. Fuel flow actuator (Fuel pressure regulator)
7. Turbocharger boost sensor (63 kW engine models only)
8. Charge air cooler
9. Fuel pump
10. Engine coolant temperature sensor
11. Crankshaft position sensor
12. Mass air flow sensor and intake air temperature sensor
13. Air cleaner
14. Stop lamp switch
15. Accelerator pedal position sensor
16. Turbocharger
17. Turbocharger boost control actuator
18. Turbocharger boost control solenoid valve (63 kW engine models only)
19. Vacuum side
20. Ambient side
21. Glow control unit
22. Exhaust gas
23. Catalyst
24. Camshaft position sensor
25. Battery
26. Ignition switch
27. Mlfunction indicator
28. Glow lamp
29. Glow plug
30. Fuel injector
31. Fuel return
32. EGR cooler
33. CAN communication
34. Intake mamifold

Vacuum Hose Drawing

BBS00404

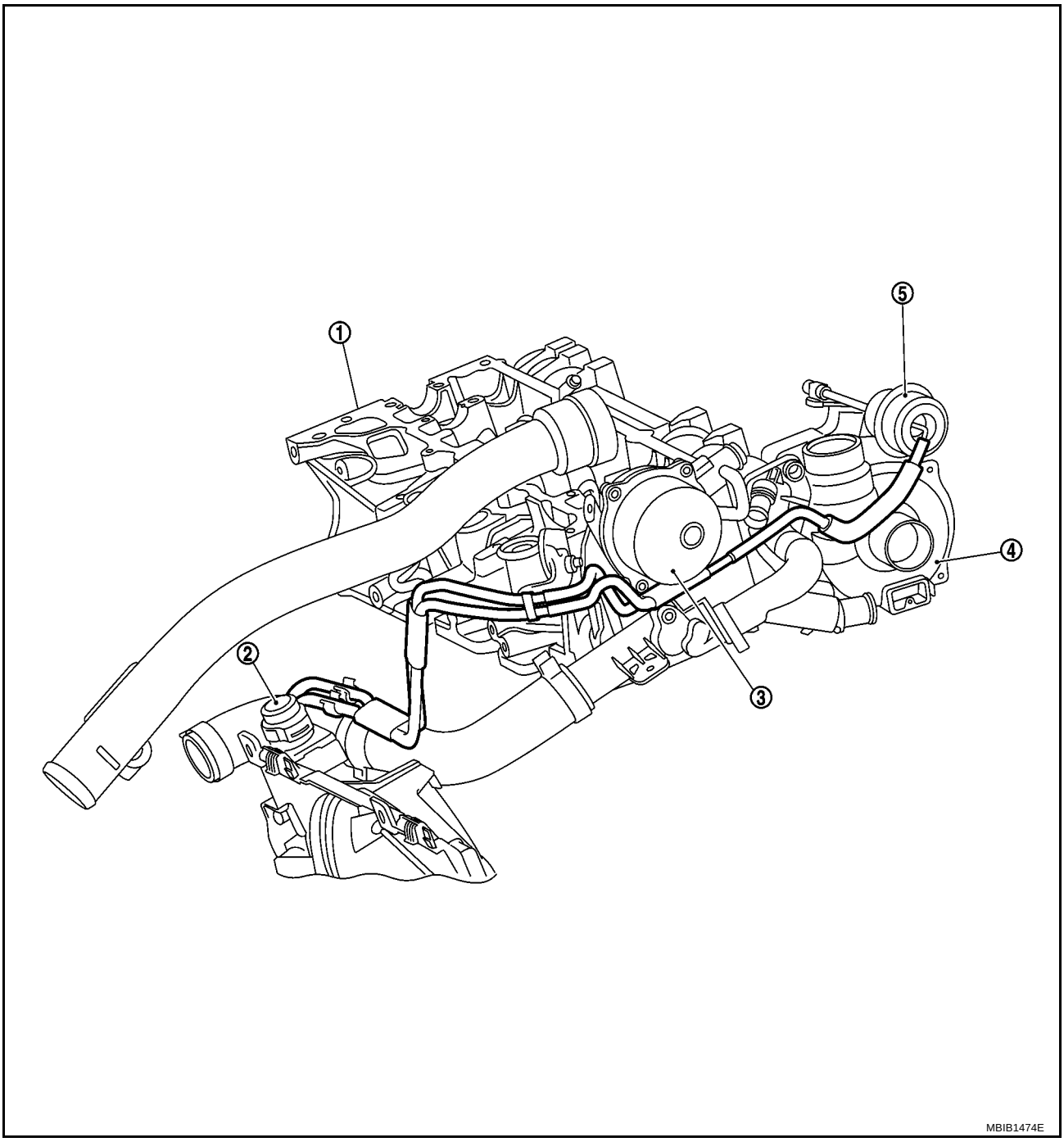

1. Cylinder head
2. Turbocharger boost control solenoid valve
3. Vacuum pump
4. Turbocharger
5. Turbocharger boost control actuator

NOTE: Do not use soapy water or any type of solvent while installing vacuum hose.

Refer to EC-1609, "System Diagram" for Vacuum Control System.

System Overview

BBS004TJ

The DCM1.2 injection system used on the K9K engine is an electronically-controlled high-pressure injection system. The fuel is compressed by a high-pressure pump and then stored in a fuel rail that feeds the fuel injectors. Injection takes place when a current pulse applied to the fuel injector holder. The injection delivery is proportional to the fuel rail pressure and the length of pulse applied, and the start of injection is synchronised with the start of the pulse.
The circuit comprises two sub-systems that can be distinguished from one another by the pressure level of the fuel:

- The low-pressure circuit comprises the reservoir, the fuel filter, the transfer pump and the fuel injector holder return pipes
- The high-pressure circuit consists of the high-pressure pump, the fuel rail, the fuel injector holders and the high-pressure tubes

Finally, there are a certain number of regulation sensors and actuators that allow command and control of the system as a whole.

Fuel Injection Control

BBS004TL

The high pressure injection system is intended to deliver a specific quantity of fuel to the engine at a specific time.

- DELPHI DCM1.2 Common Rail injection system
  Refer to EC-1609, "System Diagram" for details.
- The system consists of:
  - Priming pump on the low pressure circuit
  - Fuel filter
  - High pressure pump incorporating a low pressure pump (transfer pump)
  - Flow actuator (fuel pressure regulator) attached to the fuel pump
  - Fuel rail
  - Fuel rail pressure sensor located in the fuel rail
  - Four fuel injectors
  - Fuel pump temperature sensor
  - Engine coolant temperature sensor
  - Intake air temperature sensor
  - Camshaft position sensor (cylinder reference sensor)
  - Turbocharger boost sensor
  - Knock sensor
  - EGR volume control valve
  - Accelerator pedal position sensor
  - ECM
- The “common rail” direct high pressure injection system works sequentially.
- This new injection system reduces operating noise, reduces the volume of pollutant gases and particles and produces high engine torque at low engine speeds thanks to a pre-injection procedure.
- The high pressure pump generates the high pressure sent to the fuel rail. The flow actuator on the pump controls the quantity of fuel supplied according to the demand determined by the ECM. The fuel rail supplies each fuel injector through a steel pipe.
- The ECM:
  - Determines the value of injection pressure necessary for the engine to operate well and then controls the pressure regulator. It checks that the pressure value is correct by analyzing the value transmitted by the fuel rail pressure sensor located on the fuel rail.
  - Determines the injection time necessary to deliver the right quantity of fuel and the moment when injection should be started.
  - Controls each fuel injector electrically and individually after determining these two values.
- The injected flow to the engine is determined by:
  - The duration of fuel injector control

- The fuel injector opening and closing speed
- The needle travel (determined by a constant for the type of fuel injector)
- The nominal hydraulic flow of the fuel injector (unique to each fuel injector)
- The fuel rail pressure controlled by the ECM

- The ECM controls:
  - The idle speed adjustment
  - The exhaust gas flow reinjected into the intake manifold
  - The fuel supply control (advance, flow and fuel rail pressure)
  - The cooling fan control
  - The glow plug (pre/post heating) control
- The high pressure pump is supplied at low pressure by an integrated low pressure pump (transfer pump). It supplies the fuel rail whose pressure is controlled for charge by the flow actuator and for discharging by the fuel injector valves. Falls in pressure can be compensated for in this way. The flow actuator allows the high pressure pump to provide just the amount of fuel necessary to maintain the pressure in the fuel rail. Thanks to this element, heat generation is minimized and engine output improved.
  In order to discharge the fuel rail using the fuel injector valves, the valves are controlled by short electrical impulses:
  - Short enough not to open the fuel injector, (through the return circuit from the fuel injectors)
  - Long enough to open the valves and discharge the fuel rail
- The ECM controls the cooling fans and the engine coolant temperature warning light on the instrument panel.

IMPORTANT

- The engine must not operate with:
  - Fuel containing more than 10% diester
  - Gasoline, even in tiny quantities
- The system can inject the fuel into the engine at a pressure up to 1400 bars. Before carrying out any work, check that the fuel rail is not under pressure and that the fuel temperature is not too high.
- You must respect the cleaning and safety advice specified in this document for any work on the high pressure injection system.
- Removal of the interior of the pump and fuel injectors is prohibited. Only the flow actuator, the fuel pump temperature sensor and the venturi can be replaced.
- For safety reasons, it is strictly forbidden to slacken a high pressure pipe union when the engine is running.
- It is not possible to remove the fuel rail pressure sensor from the fuel rail because this may cause circuit contamination malfunctions. If the fuel rail pressure sensor fails, the fuel rail pressure sensor, the fuel rail and the five high pressure pipes must be replaced.
- It is strictly forbidden to remove any injection pump pulley marked number 070 575. If the pump is being replaced, the pulley must be replaced.
- It is forbidden to repair the wiring connecting the knock sensor and the crankshaft positon sensor. If the wiring should malfunction, it has to be replaced with new wiring.
- Applying 12V directly to any component in the system is prohibited.
- Ultrasonic carbon removal and cleaning are prohibited.
- Never start the engine without the battery being connected correctly.
- Disconnect the injection system ECM when carrying out any welding work on the vehicle.
- It is essential to replace all the disconnected air intake plastic pipes.

Functions Performed

BBS004TK

Function: Fuel supply management (advance, delivery and pressure).
Quantity of fuel injected and regulation of injection advance.
The injection control parameters are the quantities to be injected and their respective advances.
These are calculated by the ECM on the basis of information from the following signals:

- Engine speed (crankshaft + cam for synchronisation)
- Accelerator pedal position

- Charge air pressure
- Intake air temperature
- Charge air pressure
- Engine coolant temperature
- Fuel rail pressure
- Ambient barometric pressure

The quantities to be injected and their respective advances are converted into:

- Reference tooth
- Time between this tooth and the start of the pulse
- Time for which the fuel injector holder is fed

An electrical current (pulse) is sent to each fuel injector holder as a function of the previously calculated data. The system performs between one and four injections (a pilot injection, a pre-injection, a main injection and a post-injection). The general principle is to calculate a total delivery injected which will then be distributed across the deliveries of the various injections to promote efficient combustion and a reduction in pollutant emissions.

A knock sensor is used to control some of the deviations when the fuel is injected. This plays a number of roles:

- Protection of the engine by detecting injection losses (disabled on the basic version)
- Checking of the pilot quantity by measurement of the deviations and dispersions

By modifying the duration on the one hand and the injection advance on the other, it is possible to readjust the quantity of fuel injected and the instant of ignition of the mixture.

FUEL RAIL PRESSURE CONTROL

The quality of combustion is influenced by the size of the droplets atomised in the cylinder. In the combustion chamber, smaller drops of fuel will have time to burn completely and not produce smoke or nonburned particles. To meet anti-pollution requirements it is necessary to reduce the size of the droplets and thus the injection holes.

The smaller these holes are, the less fuel can be introduced at a given pressure which limits the power. To overcome this malfunction it is necessary to increase the quantity of fuel injected which in practice means increasing the pressure (and the number of openings of the fuel injector nozzles). In the case of the Delphi Common Rail, the pressure can reach 1600 bar in the fuel rail and must be permanently controlled. The measurement circuit is comprised an active fuel rail pressure sensor on the fuel rail linked to an analogue port of the ECM.

The high-pressure pump is fed at low pressure (5 bar) by an integral transfer pump. This feeds the fuel rail, the pressure of which is controlled for the charging by the fuel flow actuator (fuel pressure regulator) and for discharge by the fuel injector. This allows drops in pressure to be compensated. The fuel flow actuator (fuel pressure regulator) allows the high-pressure pump to only supply the quantity of fuel necessary to maintain the pressure in the fuel rail. Thanks to this device, the generation of heat is minimised and the efficiency of the engine is improved.

In order to discharge the fuel rail using the fuel injectors, the fuel injectors are operated by means of small electrical pulses:

- Sufficiently small not to open the fuel injector (the fuel passes through the return circuit from the fuel injectors)
- Sufficiently long to open the valves and discharge the fuel rail

Surplus fuel is fed back to the fuel filter or to the reservoir according to its delivery. In the event of non-actuation of the fuel flow actuator (fuel pressure regulator), the pressure in the fuel rail is limited by a pressure relief valve fitted on the pump.

IDLING CONTROL

The ECM is responsible for idling control. In practice it has to take into account the instantaneous power level to be delivered as a function of the following elements:

- Engine coolant temperature

- Gear ratio selected
- Battery charge
- Whether electrical loads (additional heating, climate control, engine ventilator set, rear window defogger, etc.) are on or off
- System malfunctions detected

INDIVIDUAL FUEL INJECTOR CORRECTION

The fuel injectors of the DCM1.2 system must be calibrated with fuel injector adjusting values in order to accurately set their delivery. Calibration of each fuel injector is performed for various pressures on a test bed and the characteristics are shown on a label attached to the fuel injector holder body. These fuel injector adjusting values are then entered in the ECM memory thereby allowing it to operate the fuel injectors taking into account their manufacturing variance.

MEASUREMENT OF THE ANGULAR POSITION

Crankshaft position sensor (CKPS):
Measurement of the angular position is performed by means of a magneto-inductive sensor that is excited by machined into the flywheel of the crankshaft. This flywheel comprises sixty teeth with a spacing of six degrees, less two missing teeth to form a notch.
Camshaft position sensor (CMPS):
A second sensor (Hall effect) excited by a tooth machined in the drive pulley of the high-pressure pump (in synch with the camshaft), rotates at half the speed of the engine and provides information on the operation of the injection cycle.
By comparing the signals from these two sensors, the angular position subsystem (APS) of the ECM is capable of providing the system as a whole with the following synchronisation information: the angular position of the flywheel, the speed, the number of the active fuel injector and the advance in the injection cycle.
This module also provides the system with information on the speed of rotation.

NEW PUMP HOUSING FUEL FLOW STRATEGY (PUMP FUEL FLOW)

Lubrication of the pump is by means of a fuel flow cycle during which the pump is filled and comes up to pressure before transferring the fuel to the fuel rail.
This lubrication is performed using a strategy known as “new pump housing fuel flow” which prevents starting for around 10 seconds, which is the time needed for filling of the pump and starting.
For vehicles equipped with keys, if the key is released before this “first start-up” phase it is not necessary to perform a power latch before proceeding to restart the vehicle.
This strategy applies following an initial start-up in the factory and then whenever there is a change of ECM if the fuel rail pressure parameters are not copied over to the new ECM, or also following reprogramming of the ECM.

VARIABLE LOW CAPACITY (VLC) FUNCTION

Due to the combination of a number of parameters such as the temperature of the fuel, wear of parts, clogging of the fuel filter, and so on, the system′s limit may be reached during its lifetime. In this case, the pressure in the fuel rail cannot be maintained because of a lack of capacity of the pump. In the event of a lack of pump capacity, therefore, this strategy will reduce the delivery required to a value that allows the pressure controller to re-check the pressure.

EGR VOLUME CONTROL VALVE OPERATION

The EGR system (exhaust gas recirculation) is comprised a direct current proportional EGR volume control valve with integral potentiometer to read the position of the valve. The EGR volume control position is controlled in a closed circuit via the potentiometer and/or the change in the estimated air deliver

AIR DELIVERY CALCULATION

The delivery of fresh air that enters the engine is indicated by a mass air flow sensor. This mass air flow sensor allows management of the quantity of exhaust gas to be recirculated in order to guarantee the best recirculation rates. An intake air temperature sensor is incorporated in the mass air flow sensor.
Measurement of the air delivery allows closed-circuit control via the EGR volume control valve.

TURBO CONTROL

K9K 63kw Engine:

The turbo system is comprised a solenoid valve that allows control of the waste gate in order to create a boost pressure or a depression in the admission circuit.

K9K 50kw Engine:

The turbo system is self-regulating and does not need to be controlled by the ECM.

FUNCTION: STORED FUNCTIONS

Climate Control Management Assistance

With climate controlled models, the DCM1.2 system offers the possibility of deactivating the air conditioning under certain usage conditions:

- Intentional interruption by the driver
- During the start-up phases
- In the event of overheating (in order to reduce the power to be supplied by the engine)
- When the speed is maintained at a very high level (protection of the compressor)
- For temporary periods (such as strong acceleration demands during overtaking, anti-stalling and moving off). These conditions are only taken into account where they occur repeatedly, in order to avoid instability of the system (untimely deactivations)
- When certain malfunctions arise

Cold Loop Climate Control

The climate control is the cold loop type and its management shared between a number of control units. The ECM is responsible for:

- Managing the demand for cold as a function of the controls in the passenger compartment and the pressure value
- Determining the power absorbed by the compressor from the pressure
- Determining the engine ventilator set commands as a function of the speed of the vehicle and the pressure

The driver turns on the climate control from the instrument panel. The information is sent to the ECM via the CAN system. This demand for cold is authorised or declined as a function of the measured pressure. If this pressure is outside the operational limits, the cold loop strategy is not activated.

NOTE:
These demands for operation of the air cooling set can be made from the ECM but they pass via the CAN. These demands are a function of the climate control, but also the engine coolant temperature and the speed of the vehicle.

Passenger Compartment Climate Control

A direct injection engine is characterised by injection of the fuel directly into the combustion chamber. The result is a reduction in heat losses from the upper part of the engine and consequently a smaller cylinder head cooling circuit is needed.
The effect of this reduction is that the temperature of the water passing through is increased more slowly. This water is then used by the passenger compartment heating system. During severe cold spells, therefore, it becomes difficult to quickly reach a comfortable temperature in the passenger compartment.
In order to limit the heating delay, air heating resistors are incorporated in the passenger compartment heating circuit. The passenger compartment heating unit determines the need to operate the heating resistors, the IPDM E/R physically controls the heating resistors and the ECM determines on the one hand as a function of the alternator the operational power limits of the heating resistors and on the other when to disable the heating resistors as a function of the engine speed, the load and the speed of the vehicle.

Idle Speed Control

BBS004TM

The ECM takes over calculation of the idle speed to maintain the idle speed at the recommended level and to compensate for any variation in the mechanical or electrical couple as regards:

- Engine coolant temperature
- Battery voltage
- Gear selected on the transmission
- Electrical loads (climate control system, cooling fan assembly etc.)
- Any malfunctions found

At the normal operating temperature, without high electrical load, the idle speed is 800 ± 50 rpm.

IDLE SPEED CORRECTION ACCORDING TO ENGINE COOLANT TEMPERATURE

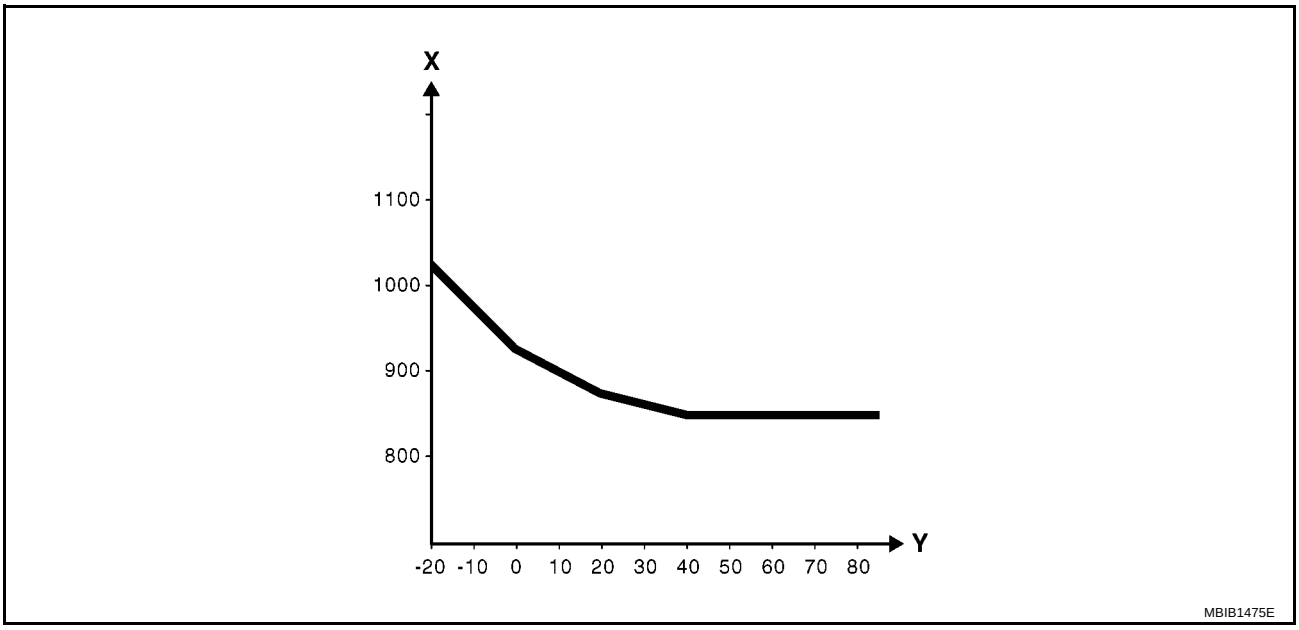

X. Engine speed in rpm Y. Engine coolant temperature in °C

SPEED ADJUSTMENT WHEN THERE IS AN ACCELERATOR PEDAL POSITION SENSOR MALFUNCTION

- If one or both terminals of the accelerator pedal position sensor are suspected, the ECM overrides the idle speed to maintain it at 1100 rpm. This fail-safe mode limits performance. The orange malfunction indicator lights up and flashes.
- If the accelerator pedal position sensor is blocked, is no longer being supplied, or is not transmitting an output signal, the ECM overrides the idle speed to maintain it at 1300 rpm. This mode limits performance. The orange malfunction indicator lights up and flashes.
- In both cases, when the brake pedal is depressed, the idle speed is stabilised at the recommended speed.
- If the information from the accelerator pedal position sensor and the brake switch information does not correspond, the speed is changed to 1100 rpm.

IDLE SPEED ADJUSTMENT WHEN THERE IS AN FUEL INJECTOR CODE MALFUNCTION

When there is an fuel injector code malfunction, the ECM overrides the idle speed to maintain it at 1300 rpm. This mode limits performance. The orange malfunction indicator lights up and flashes.

CORRECTION OF THE IDLING SPEED ACCORDING TO THE GEAR RATIOS

The idling speed is modified according to the gear selected in the transmission:

- in neutral, 1st and 2nd gear, the speed is (at the normal operating temperature) 850 rpm (graph A),
- for the other gears, the speed is (at the normal operating temperature) 900 rpm (graph B).

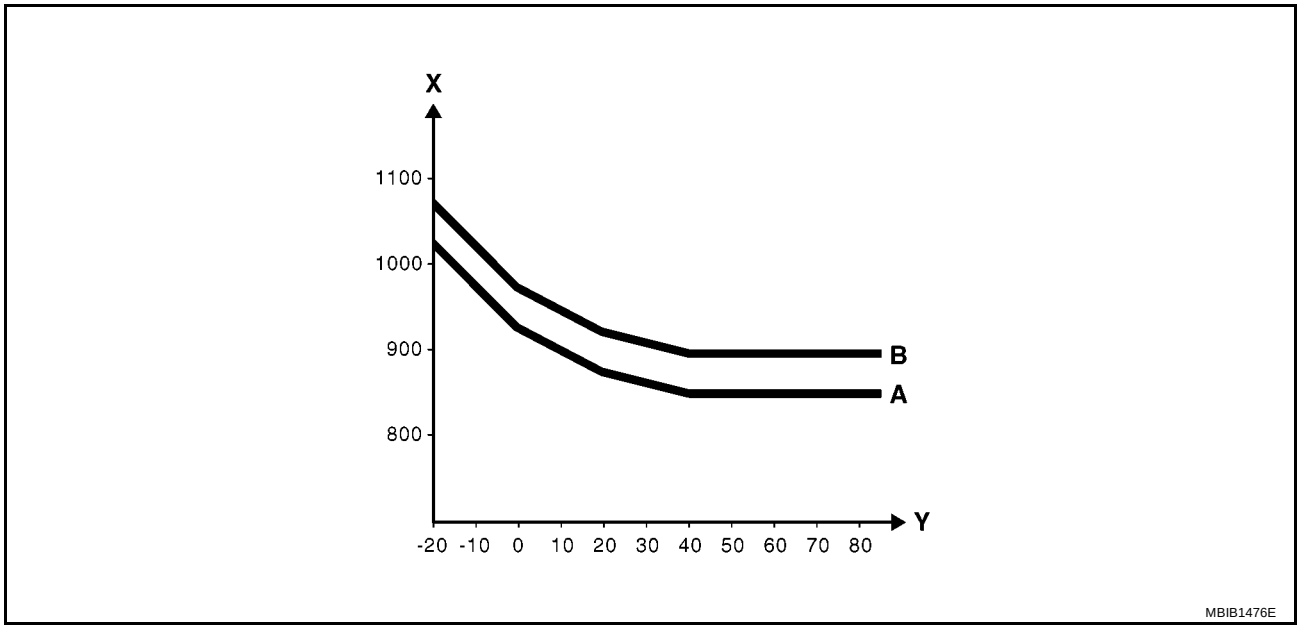

X. Engine speed in rpm Y. Engine coolant temperature in °C

Air Conditioning Control

BBS004TN

AIR CONDITIONING CONTROL

The compressor is a variable displacement type.
The air conditioning relay is controlled by IPDM E/R.

COMPRESSOR OPERATION PROGRAMMING

During certain stages of operation, the ECM stops the compressor from functioning.

Engine Starting Program

The compressor is prevented from operating for 4 seconds after the engine has started.

Thermal Protection Program

The compressor is not engaged when the engine coolant temperature is higher than 115 °C (239 °F) or from 110 °C (230 °F) at high speed, 4500 rpm for more than 3 seconds.

Fan Motor Control Programming

At idling speed and also when driving, with the air conditioning activated, the speed of the fan motor is determined according to the refrigerant pressure and the vehicle speed.

Recovery of Performance

When pressure is applied to the accelerator pedal above 70%, the compressor is disengaged for 5 seconds.

Recovery of Output When The Vehicle Starts Moving

In order to help the vehicle move off, the air conditioning compressor is disengaged if the position of the accelerator pedal is above 35% and the idling speed less than 1250 rpm.

Anti-Stall Protection

The compressor is disengaged if the engine speed is lower than 750 rpm.

Engine Overspeed Timed Protection Program

The compressor is disengaged when the engine speed reaches 4500 rpm for more than 3 seconds.

NOTE:
The time between the compressor being disengaged twice is always greater than 10 seconds.

Pre/Postheating (Glow Plug) Control

BBS004TO

The pre/postheating function is controlled by the glow control unit.

PRE/POSTHEATING (GLOW PLUG) OPERATING PRINCIPLE

“Preheating” at Ignition Switch ON

1. Variable preheating
   The time period for the glow lamp to light up and the feed to heater plugs depends on the engine coolant temperature and the battery voltage.

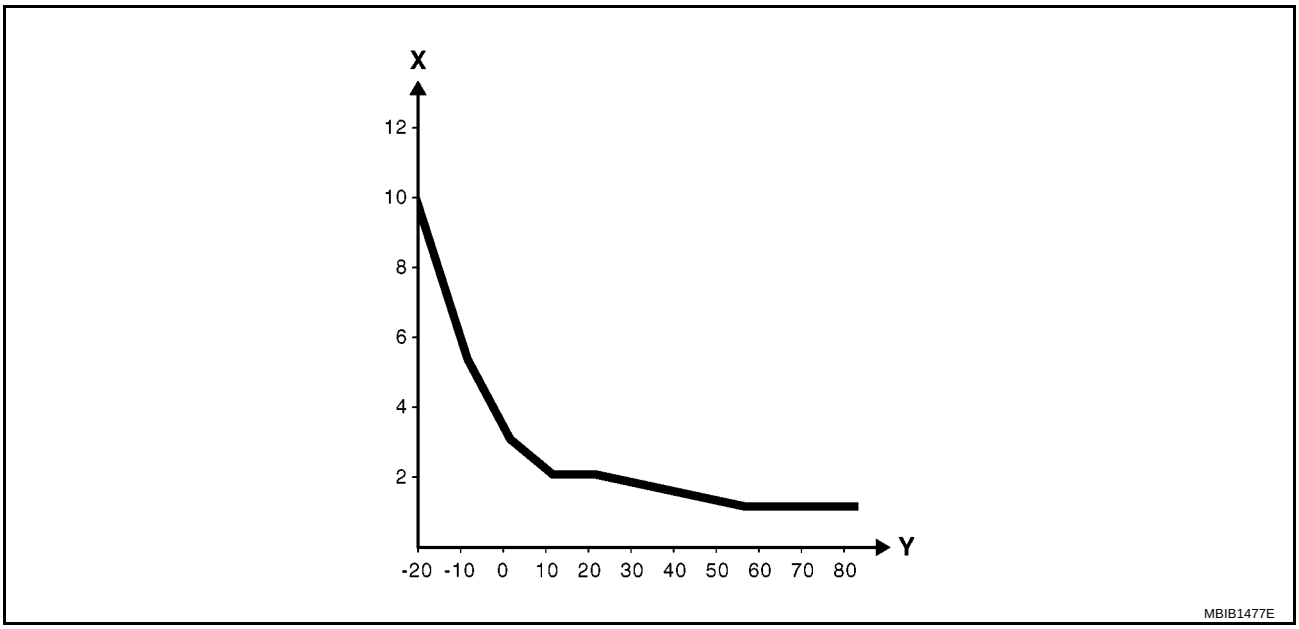

X. Time in seconds Y. Temperature in °C

   Whatever the situation, the preheating glow lamp cannot be lit for more than 10 seconds (except in the event of an engine coolant temperature sensor malfunction).

2. Fixed preheating
   After the glow lamp goes out the plugs remain supplied for a fixed period of 5 seconds.

“Post Heating” With The Engine Running

During this phase the plugs are supplied continuously according to engine coolant temperature.
For idle speed without depressing the accelerator pedal.

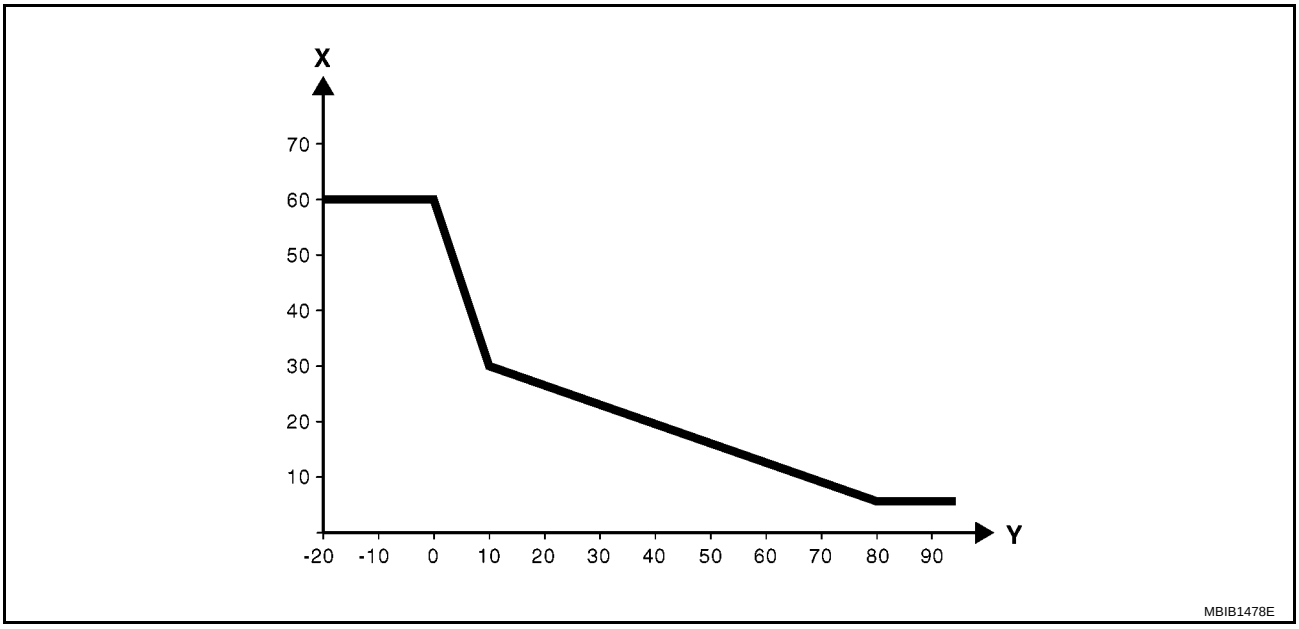

X. Time in seconds Y. Engine coolant temperature in °C

Glow Plugs

BBS004TP

The resistance of a glow plug is 0.6Ω.

TIGHTENING TORQUE

Glow plug: 1.5 N·m, 15 kg/cm, 13 in/lb

Plugs may be removed without having to open the high pressure circuit.

REMOVAL

1. Disconnect the battery.
2. Unclip the plug connector.
3. Clean the outside of the plug to avoid any dirt entering the cylinder.
4. Loosen and remove the plugs.

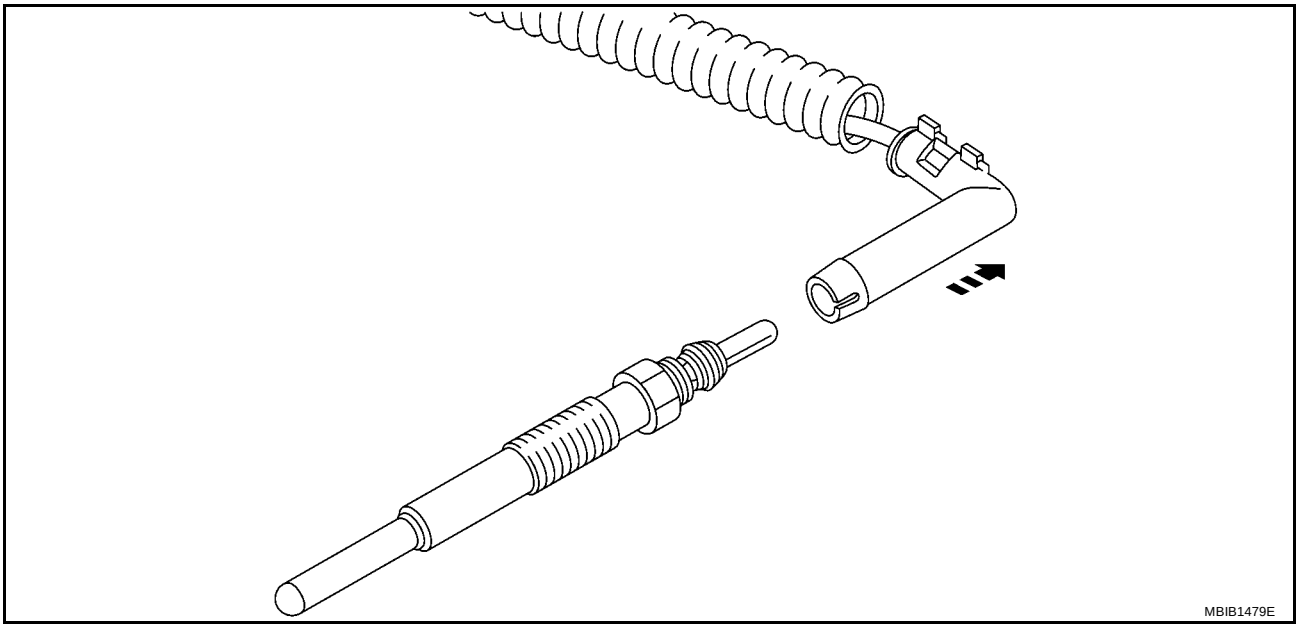

To undo the plug on cylinder 4 use a 10 mm long radio socket attached to a universal joint. Once the plug is loosened use a hose to unscrew it completely.

REFITTING

Proceed in the reverse order of removal.

Cooling Fan Control

BBS004TQ

The cooling fan motor is controlled by the ECM.

COOLING FAN OPERATION WITH THE ENGINE RUNNING

The cooling fan motor is controlled:

- At slow speed if the engine coolant temperature exceeds 96 °C (205 °F) or if there is an engine coolant temperature sensor malfunction, and is switched off when the temperature falls below 93 °C (199 °F).
- at high speed if the engine coolant temperature exceeds 99 °C (210 °F) or if there is a low speed malfunction, and is switched off when the temperature falls below 96 °C (205 °F).

The cooling fan motor low and high speeds are controlled when the air conditioning function is selected on the instrument panel.
If the low speed setting is suspected, the high speed setting operates under the low speed conditions.

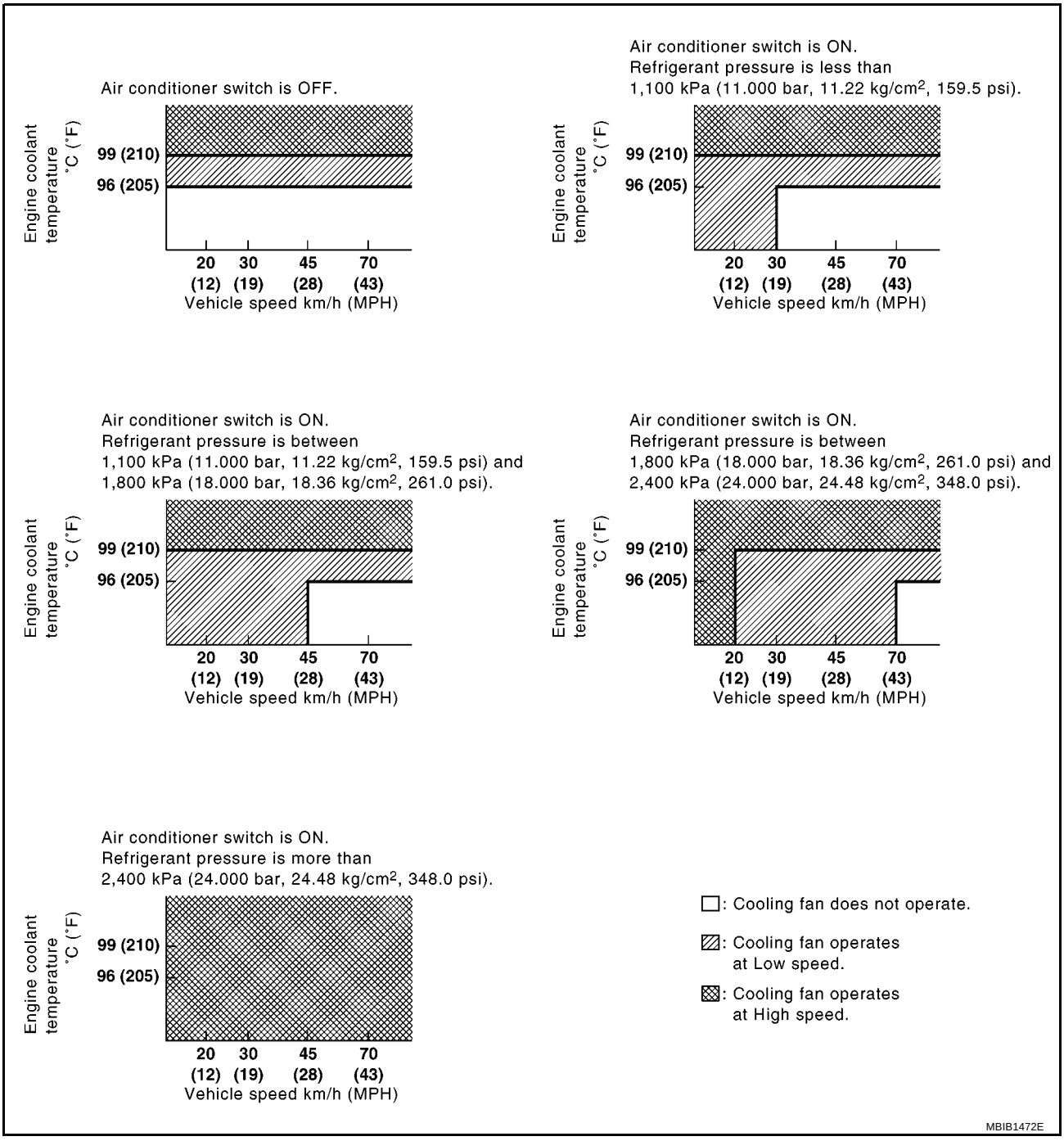

OPERATION OF THE ENGINE COOLANT TEMPERATURE WARNING LIGHT

The engine coolant temperature warning light remains lit if the engine coolant temperature exceeds 114 °C (237 °F). It goes out when the temperature falls below 111 °C (232 °F).

Oil Vapour Rebreathing

BBS004TR

CIRCUIT DIAGRAM

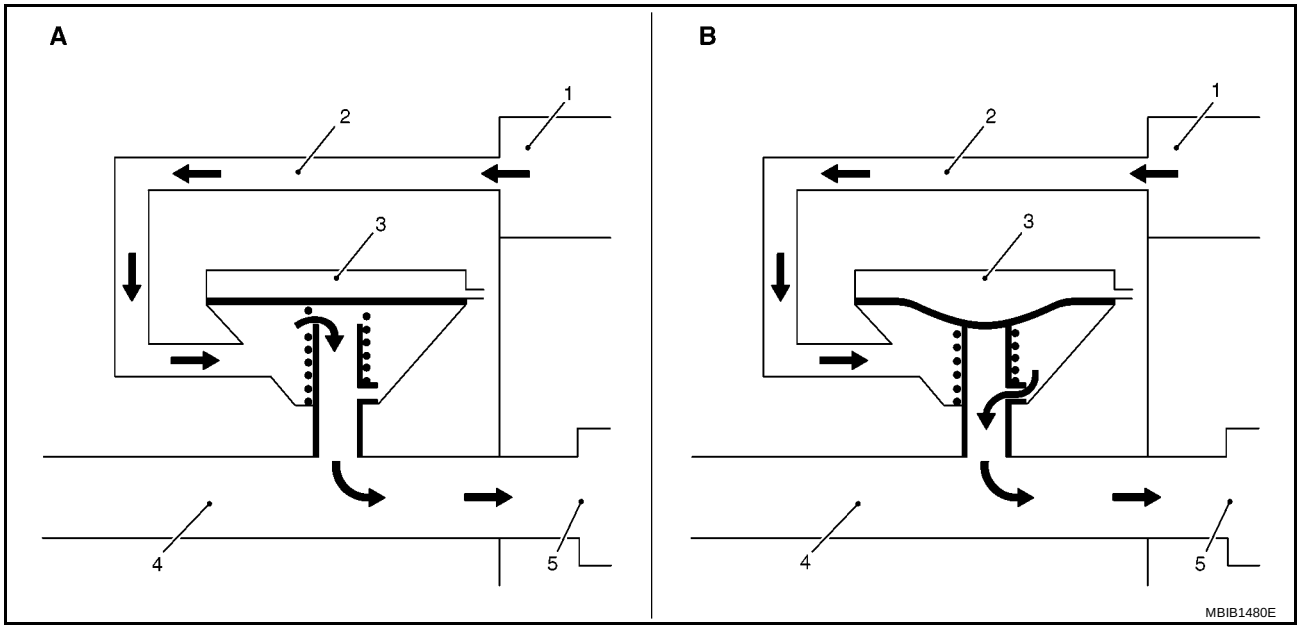

1.	Cylinder head cover	2.	Oil vapour rebreathing duct	3.	Oil vapour recirculation valve
4.	Air inlet duct	5.	Turbocharger		

- A: When there is a low charge, the vacuum in the intake air duct is below the spring set point. The oil vapours are extensively rebreathed by the vacuum in the intake air duct.
- B: When there is a medium or high charge, the pressure in the intake air duct exhausts the valve diaphragm, the oil vapours are breathed in small quantities via a calibrated hole.

CHECKING

To ensure the correct operation of the anti-pollution system, the oil vapour rebreathing circuit must be kept clean and in good condition.

Exhaust Gas Recirculation (EGR)

BBS004TS

CIRCUIT DIAGRAM

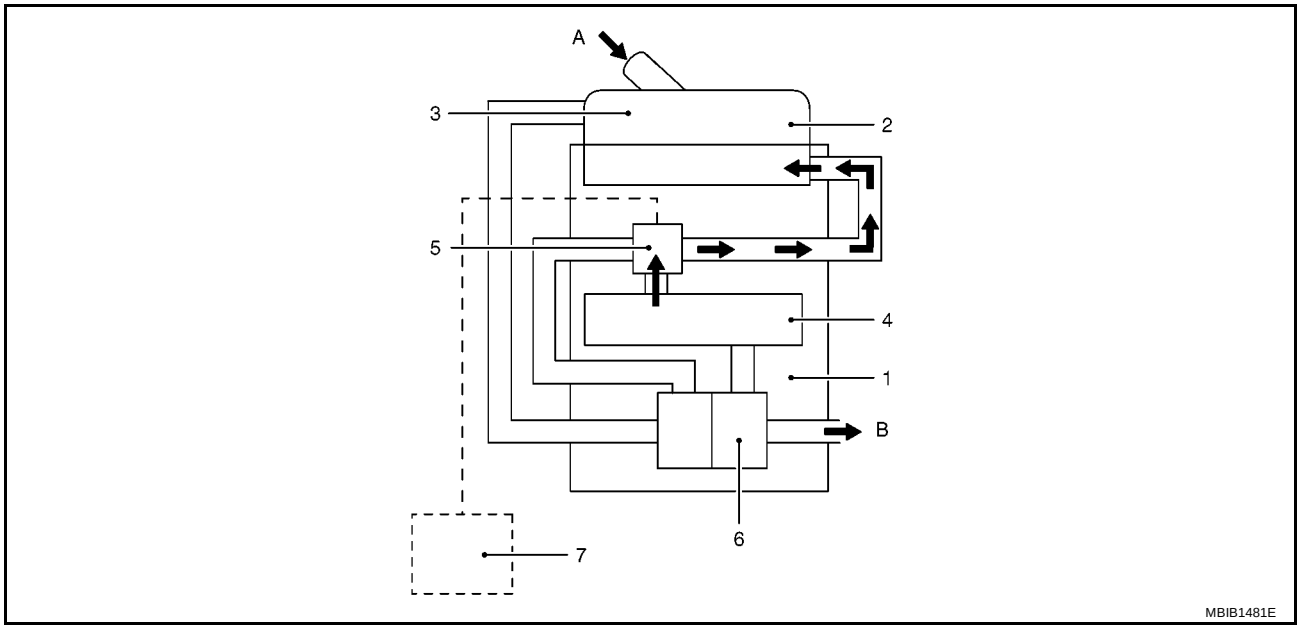

1.	Engine	2.	Air filter unit	3.	Air distributor
4.	Exhaust manifold	5.	EGR volume control valve	6.	Turbocharger
7.	ECM	A.	Air inlet	B.	Exhaust gas outlet

PURPOSE OF THE EGR SYSTEM

Exhaust gas recirculation is used to reduce the nitrogen oxide (NOx) content of the exhaust gases.
The ECM authorises gas to pass by controlling an EGR volume control valve.

OPERATING PRINCIPLE

The valve is controlled by an RCO (Opening Cyclic Ratio) signal sent by the ECM. The RCO signal modulates the opening of the valve and consequently the quantity of exhaust gas directed back to the intake manifold.
The ECM continuously carries out a test to detect the position of the EGR volume control valve.

NOTE:
The position of the EGR volume control valve is determined by the calculation of the amount of air taken in by the engine.

OPERATING CONDITIONS

The parameters which determine the activation of the EGR volume control valve are as follows:

- Engine coolant temperature
- Intake air temperature
- Ambient barometric pressure
- Accelerator pedal position
- Injected fuel flow
- Engine speed

Operating point for the EGR volume control valve test:
The EGR volume control valve is activated when:

- Intake air temperature is > 15 °C (59 °F) and engine coolant temperature is > 70 °C (158 °F)
- Intake air temperature is > 50 °C (122 °F) and engine coolant temperature is > 40 °C (104 °F)
- Engine speed is between 850 and 1,000 rpm
- Injected fuel flow is between 2 and 5 mg/stroke
- Ambient barometric pressure is between 980 and 1,000 mbar

In this case, the CONSULT-II can read an RCO value of the EGR volume control valve equals to 16%.

EGR function is disabled if:

- Battery voltage is less than 9 V
- Engine speed is below 500 rpm
- Mapping (engine speed/load) exceeds a given threshold
- Air conditioning compressor is activated

The EGR volume control valve is not supplied for 2 seconds after the engine starts.

If there is a malfunction in:

- EGR volume control valve
- Turbocharger boost sensor

the operation of the EGR volume control valve is cut.

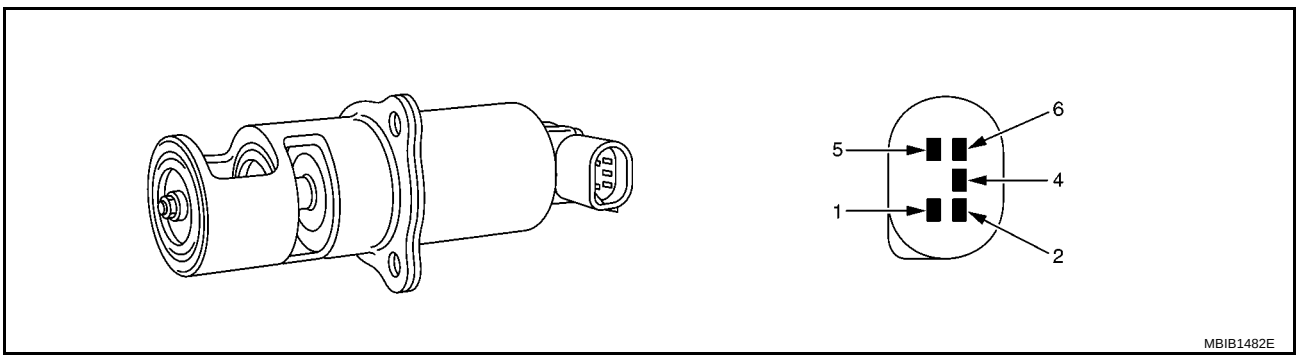

1. Position sensor signal (sensor signal)
2. Position sensor earth (sensor ground)
3. Position sensor feed (sensor power)
4. Valve earth control (ground control)
5. Not used
6. Valve feed (power supply)

CAN Communication

BBS0040B

SYSTEM DESCRIPTION

CAN (Controller Area Network) is a serial communication line for real time application. It is an on-vehicle multiplex communication line with high data communication speed and excellent error detection ability. Many electronic control units are equipped onto a vehicle, and each control unit shares information and links with other control units during operation (not independent). In CAN communication, control units are connected with 2 communication lines (CAN H line, CAN L line) allowing a high rate of information transmission with less wiring. Each control unit transmits/receives data but selectively reads required data only.
Refer to LAN-27, "CAN Communication Unit" , about CAN communication for detail.

BASIC SERVICE PROCEDURE

PFP:00018

Fuel Filter

BBS0040C

DESCRIPTION

A water draining cock is on the lower side and a priming pump for bleeding air is on the upper side.

AIR BLEEDING

After fuel filter is replaced and after fuel system components are removed/installed, bleed air from fuel line as follows:

1. Prime the circuit using the priming pump.
2. Perform engine cranking with repeating several times until engine starting.

CAUTION:

- **Crank engine until it starts. Do not crank engine for more than 30 seconds.**
- **Prepare a tray to collect fuel. Prevent fuel from adhering to rubber parts, especially the engine mounting insulator.**

WATER DRAINING

1. Prepare a tray at the drain plug open end.
2. Loosen drain plug, and operate priming pump to drain water from fuel filter.

   CAUTION:

   - **Water in filter is drained with fuel. Prepare larger capacity pan than fuel filter volume.**
   - **Drained water is mixed with fuel. Prevent fuel from adhering to rubber parts such as engine mounting insulator.**
3. After draining, close drain plug by hand.

   CAUTION:

   If drain plug is tightened excessively, it may be damaged and fuel will leak. Do not use tools to tighten drain cock.
4. Bleed air in fuel piping. Refer to EC-1625, "AIR BLEEDING" .
5. Start engine and make sure there is no fuel leakage.

Injector Adjustment Value Registration

BBS0040E

There is a 16 digit code on the fuel injectors called injector adjustment value. This code is specific to each fuel injector, and takes into account differences in manufacture and specifies the flow injected by each of them.
When a fuel injector is replaced, it is necessary to program the injector adjustment value of the new fuel injector into the ECM.
When an ECM is replaced, it is necessary to program the injector adjustment values of the four fuel injectors.
There are two possibilities:

- If it is possible to communicate with the ECM:
  - Read out the data from the ECM using the “SAVE DATA FOR REPLACE” in “WORK SUPPORT” mode with CONSULT-II.
  - Turn ignition switch OFF.
  - Remove battery negative cable.
  - Change the ECM.
  - Reprogram the data from the “WRITE DATA AFTER REPLACE” in “WORK SUPPORT” mode with CONSULT-II to the replaced ECM.
  - After replacement, ensure that the ECM has not detected malfunctions relating to the injector adjustment value and check that the MI is turned OFF.
- If it is not possible to communicate with the ECM:
  - Turn ignition switch OFF.
  - Remove battery negative cable.
  - Change the ECM.
  - Read the data on the fuel injectors.
  - Enter the data in the ECM using the “ENTER INJCTR CALIB DATA” in “WORK SUPPORT” mode with CONSULT-II manually.

- Reconfigure the different elements such as the power-assisted steering pump assembly and the thermoplungers etc.
- Using CONSULT-II, ensure that the ECM has not detected malfunctions relating to the injector adjustment value and check that the MI is turned OFF.

Tightening The High Pressure Pipes

BBS004TX

All the high pressure pipe removed must be systematically replaced along with the clips.

NOTE:
Fit the pump/rail pipe before the rail/injector pipes.

RAIL-PUMP PIPE

- Undo the rail,
- Grease the threads of the high pressure pipe nuts,
- Insert the high pressure pipe olive into the taper of the high pressure pump outlet,
- Insert the high pressure pipe olive into the taper of the high pressure rail inlet.
- Move the nut into position by hand, on the rail side then the pump side,
- Tighten the rail,
- Tighten the high pressure pipe nuts on the rail side then on the pump side.

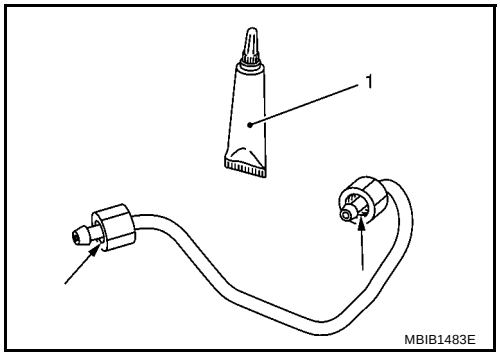

RAIL/INJECTOR PIPES

- Undo the rail,
- Grease the threads of the high pressure pipe nuts,
- Insert the high pressure pipe olive into the taper of the high pressure injector inlet,
- Insert the high pressure pipe olive into the taper of the high pressure rail outlet,
- Move the nuts into position by hand, on the injector side then the rail side,
- Tighten the rail,
- Ensure that the new clip, supplied with the new high pressure pipe, is fitted,
- Tighten the nuts of the high pressure pipes on the injector side first and then on the fuel rail side.

NOTE:
Before fitting a new high pressure pipe, move back the nuts on the pipe then lightly lubricate the nut threads with the oil from the sachet (1) provided in the parts kit.

Checking Sealing After Repair

BBS004TY

After any operation, check that there are no fuel leaks.

Reprime the circuit using the priming pump.
Start the engine and allow to warm up at idle speed, visually inspecting for any fuel leaks.
Apply tracing fluid around the high pressure connections of the pipe that has been replaced.
Once the engine coolant temperature is above 50 °C and provided there are no malfunctions present, carry out a road test, taking the engine speed up to 4,000 rpm at least once to check that there are no leaks.
Perform a visual inspection after the road test to make sure that there are no high pressure leaks.
Clean off the tracing fluid.

Replacing ECM

BBS004TZ

The system can be reprogrammed using CONSULT-II.
Before an ECM is replaced in after-sales, the following must be done.

- Check the injector adjustment value using “WORK SUPPORT” mode with CONSULT-II.
- After replacing ECM, enter each injector adjustment value using “WORK SUPPORT” mode with CONSULT-II.
- Also set the system configuration using “CONFIGURATION” mode with CONSULT-II.

Replacing Fuel Injectors

BBS004U0

NOTE:
Injector adjustment value is a factory calibration carried out on each fuel injector to adjust the flow of each one precisely, taking into account differences in manufacture.
The injector adjustment values are written on a label affixed to each fuel injector then entered in the ECM which can then control each fuel injector by taking account of their differences in manufacture.
The system can be programmed “WORK SUPPORT” mode with CONSULT-II.
The injector adjustment values (16 digit code) must be replaced after replacing a fuel injector.

- Entering each injector adjustment value, when replacing the ECM.

ON BOARD DIAGNOSTIC (OBD) SYSTEM

PFP:00028

Introduction

BBS0040I

The ECM controls the display on the instrument panel of certain information relating to the operation of the engine.
Four functions are involved here: The OBD malfunction indicator [MI(Yellow)] for the EOBD (European On Board Diagnostics), the pre/post heating, the engine coolant temperature and engine malfunction [MI(Red)]. These four functions are represented by four lights given out by the ECM

PRE/POST HEATING LAMP

This lamp indicates that the pre-heating has been activated.

ENGINE COOLANT TEMPERATURE LIGHT

This light is used as an indicator of engine overheating.

- In the event of overheating, it is up to the driver whether to stop the vehicle or not.

OBD LIGHT

The OBD malfunction indicator [MI(Yellow)] is used to alert the driver to the existence of engine control system malfunctions involving excessive pollution or if the EOBD system is deactivated.
The ECM makes a request for lighting of the MI(Yellow) only where there is a malfunction present at the end of three consecutive cycles.
The 3-second visual check upon powering up (automatic test procedure controlled by the IPDM E/R) is performed by the ECM.
In the event of a confirmed OBD malfunction by lighting of the OBD light, no flashing of the light must be observed following the lighting test.

DTCs Causing MI to Light

DTC	Description	Characterization	Reference page
P0201	Cylinder 1 injector control circuit (Open circuit) (Short circuit)	CC CO	EC-1745, "DTC P0201 - P0204 FUEL INJECTOR"
P0202	Cylinder 2 injector control circuit (Open circuit) (Short circuit)	CC CO	EC-1745, "DTC P0201 - P0204 FUEL INJECTOR"
P0203	Cylinder 3 injector control circuit (Open circuit) (Short circuit)	CC CO	EC-1745, "DTC P0201 - P0204 FUEL INJECTOR"
P0204	Cylinder 4 injector control circuit (Open circuit) (Short circuit)	CC CO	EC-1745, "DTC P0201 - P0204 FUEL INJECTOR"
P0400	EGR volume control valve (EGR volume control valve blocked open)	4.DEF	EC-1791, "DTC P0400 EGR FUNCTION"
P0403	EGR volume control valve (Open circuit or short circuit to ground)	CO.0	EC-1795, "DTC P0403 EGR VOLUME CONTROL VALVE"
P0487	EGR volume control valve control position sensor circuit (Open circuit or short circuit to ground) (Short circuit to +12V)	CO.0 CC.1	EC-1805, "DTC P0487 EGR VOLUME CONTROL VALVE CONTROL POSITION SENSOR"
P062F	ECM (Reading to EEPROM memory)	2.DEF	EC-1828, "DTC P062F ECM"

ENGINE WARNING LIGHT

In the event of an engine malfunction, the ECM may request the display of an engine warning light [MI(Red)].

How to Erase DTC

BBS004UN

With CONSULT-II

The DTC in the ECM can be erased by selecting “ERASE” in the “SELF-DIAG RESULTS” mode with CONSULT-II.

1. If the ignition switch stays ON after repair work, be sure to turn ignition switch OFF once. Wait at least 5 seconds and then turn it ON (engine stopped) again.
2. Touch “ENGINE”.
3. Touch “SELF-DIAG RESULTS”.
4. Touch “ERASE”. (The DTC in the ECM will be erased.)

How to erase DTC (With CONSULT-II)

1. If the ignition switch stays “ON” after repair work, be sure to turn ignition switch “OFF” once. Wait at least 5 seconds and then turn it “ON” again.

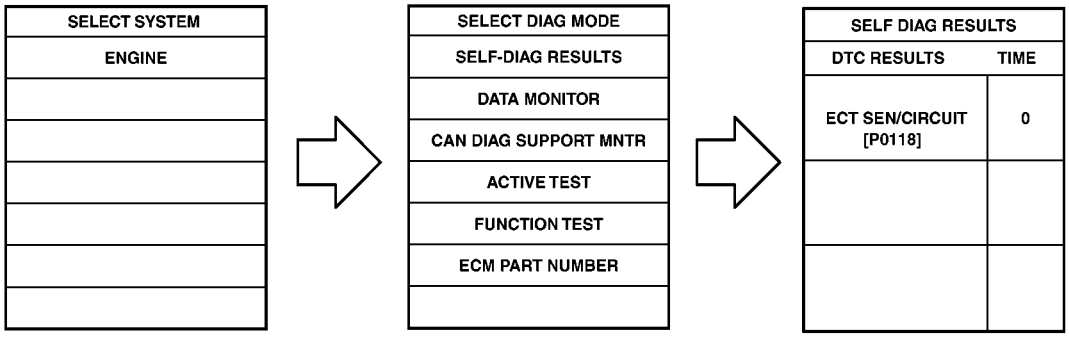

2. Turn CONSULT-II “ON” and touch “ENGINE”.
3. Touch “SELF-DIAG RESULTS”.
4. Touch “ERASE”. (The DTC in the ECM will be erased.)

PBIB2452E

NATS (Nissan Anti-Theft System)

BBS0040L

- **If the security indicator lights up with the ignition switch in the ON position or “NATS MALFUNCTION””is displayed on “SELF-DIAG RESULTS” screen, perform self-diagnostic results mode with CONSULT-II using NATS program card. Refer to BL-215, "NATS (Nissan Anti-Theft System)" .**
- **Confirm no self-diagnostic results of NATS is displayed before touching “ERASE” in “SELF-DAIG RESULTS” mode with CONSULT-II.**
- **When replacing ECM, initialization of NATS system and registration of all NATS ignition key IDs must be carried out with CONSULT-II using NATS program card.**
  Therefore, be sure to receive all keys from vehicle owner.
  Regarding the procedure of NATS initialization and all NATS ignition key ID registration, refer to CONSULT-II operation manual, NATS.

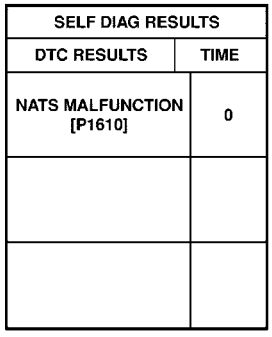

SEF543X

REPLACING THE ECM

This vehicle is fitted with an engine immobilizer system which is controlled by a key recognition system.
The ECM is supplied without a code but they must all be programmed with one.
If an ECM is replaced, it must be programmed with the code of the vehicle and the correct operation of the engine immobilizer function must be checked.

WARNING:
These vehicles have a special ECM which does not function unless it is coded.
Consequently, it is strongly recommended that you do not carry out tests using ECMs borrowed from the warehouse or on another vehicle to prevent coding and uncoding malfunctions which may leave the ECM useless.

UNCODING PROCEDURE

If the ECM has learnt a code and must be returned to the workshop, it is imperative that you uncode it before removing it.

TROUBLE DIAGNOSIS

PFP:00004

Trouble Diagnosis Introduction

BBS0040O

SCOPE OF THIS DOCUMENT

This document presents the trouble diagnosis method applicable to all ECMs with the following specifications:

Vehicle(s):	E11 with K9K
Function concerned:	DELPHI, DIRECT DIESEL INJECTION, COMMON RAIL MULTI INJECTION
Name of ECM:	INJECTION DCM1.2
Program No.:	4D
VDIAG No.:	48

PREREQUISITES FOR TROUBLE DIAGNOSIS

To begin trouble diagnosis, it is essential to have the following items available:

Documentation Type

Diagnostic procedures:

- Assisted with CONSULT-II, Service Manual.
- Wiring diagrams.

Special tool required PLUGGED RAIL tools

REMINDERS

Trouble Diagnosis:

There are present DTCs and stored DTCs (which appeared in a certain context and have since disappeared or which are still present but have not had trouble diagnosis performed on them in the current context).
The “present” or “stored” status of DTCs must be considered when activating the diagnostic tool after power is supplied to the ECM (without activating the system components).
Deal with present DTCs according to the procedure specified in the corresponding DTC trouble diagnosis.
For stored DTCs, note the DTCs displayed and follow the instructions in the Notes section.
If the DTC is confirmed when the instructions in the Notes section are applied, the malfunction is present. Deal with the DTC.

If the DTC is not confirmed, check:

- Electrical lines which correspond to the malfunction
- Connectors for these lines (for oxidation, bent pins, etc.)
- Resistance of the malfunction component
- Condition of the wires (melted or cut insulation, wear)

Conformity Check

The conformity check is designed to check the states and data monitor items which do not display any DTCs on the diagnostic tool when inconsistent. This phase therefore allows:

- Diagnoses malfunctions that do not have a DTC display, and which may correspond to a customer complaint.
- Checks that the system is operating correctly and that there is no risk of a DTC reappearing after repairs.

This section gives the trouble diagnosis procedures for states and parameters and the conditions for checking them.
If a state is not operating normally or a data monitor value is outside permitted tolerance values, you should consult the corresponding trouble diagnosis page.

Customer Complaints - Trouble Diagnosis

If the test with the CONSULT-II is OK, but the customer complaint still present, the malfunction should be treated by customer complaints.

A synopsis of the general procedure to follow is provided on the next page in the form of a flow chart.

DIAGNOSTIC PROCEDURE

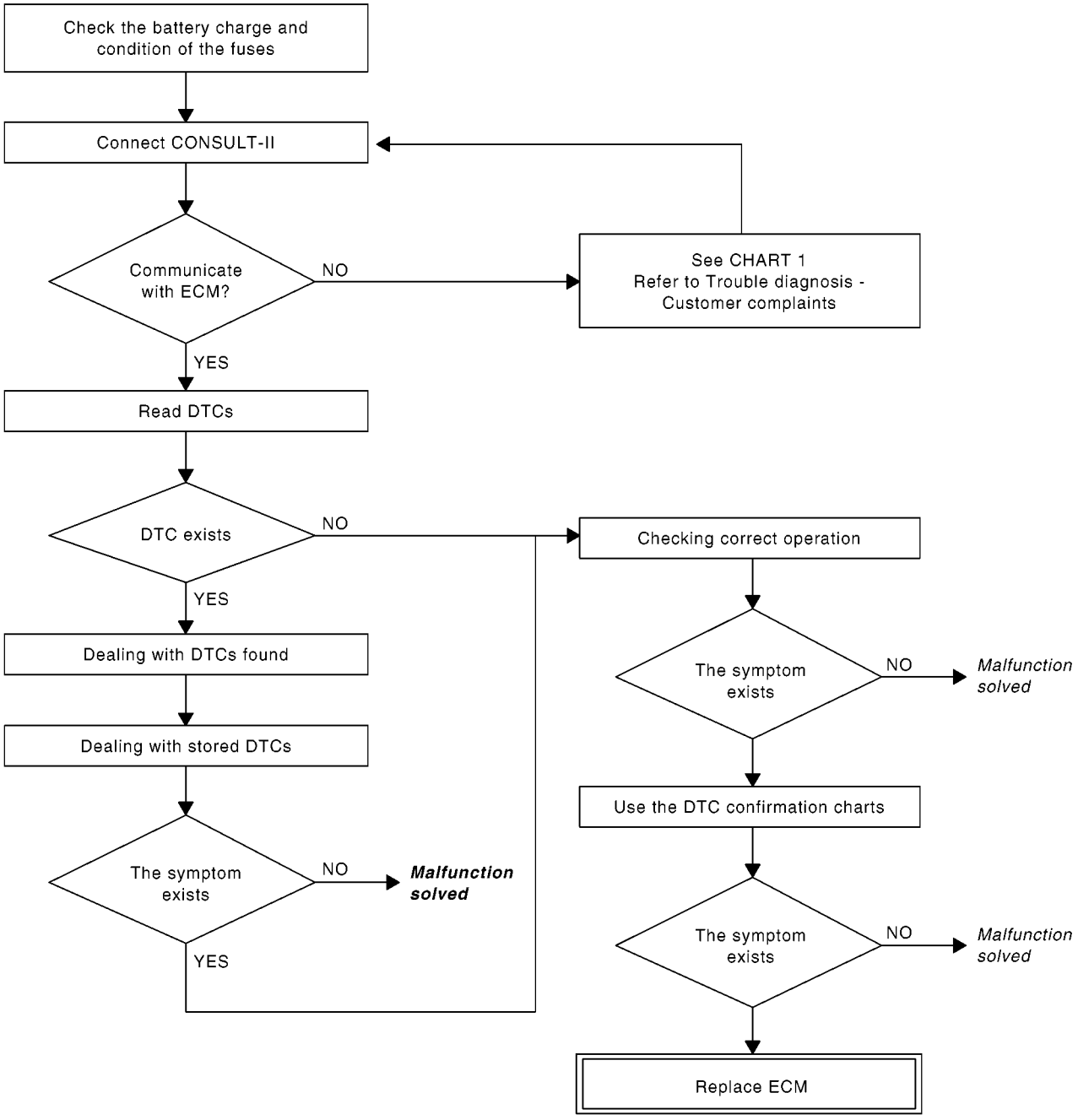

MBIB1484E

Wiring Control

Diagnostics malfunctions

Removing the connectors and/or handling the wirings may temporarily remove the origin of a DTC. The measurements of the electrical voltages, resistance and insulation are generally correct, especially when the DTC is not present at the time of the analysis (stored DTC).

Visual Check

Look for impacts under the bonnet and in the passenger compartment.
Perform a careful check of the protections, insulation and correct running of wirings.
Look for traces of oxidation.

Tactile Check

While manipulating the wirings, use the diagnostic tool to detect a change in DTC states from “stored” to “present”.
Ensure that the connectors are correctly engaged.
Apply light stresses to the connectors.
Gently manipulate the wiring harness.
If a change of state occurs, try to isolate the origin of the incident.

Examination of Each Element

Disconnect the connectors and check the appearance of the clips and blades and their crimping (no crimping on the insulating part).
Check that the clips and blades are properly engaged in the receptacles.
Ensure that there is no rebounding of clips or blades at the time of connection.
Check the contact pressure of the clips using a suitable model blade.

Resistance Control

Test the continuity of the lines in their entirety, then section by section.
Try to create a short-circuit to earth, on the + 12 V or with another wire.
If a DTC is detected, repair or replace the wiring.

SAFETY INSTRUCTIONS

All work on components requires that the safety rules be obeyed to prevent damage or injury:

- Make sure the battery is properly charged to avoid damaging the ECM with a low charge.
- Use the proper tools.

Cleanliness instructions which must be followed when working on the high-pressure direct injection system:

Risks Relating to Contamination:

The system is very sensitive to contamination. The risks caused by the introduction of contamination are damage to or destruction of the high-pressure injection system and the engine, seizing or incorrect sealing of a component.
All After-Sales operations must be performed under very clean conditions. This means that no impurities (particles a few microns in size) get into the system during dismantling or into the circuits via the fuel unions.
The cleanliness guidelines must be applied from the filter through to the injectors.

- What are the sources of contamination?
  Contamination is caused by:
  - Metal or plastic chips
  - Paint
  - Fibres from cardboard, brushes, paper, clothing, cloths
  - Foreign bodies such as hair
  - Ambient atmosphere, etc.

WARNING:

Before working on the injection system, ensure that the system pressure is nearing 0 bar.

CAUTION:

it is not possible to clean the engine using a high-pressure washer because of the risk of damaging the connections. In addition, moisture may collect in the connectors and cause electrical connection malfunctions.

Instructions to Be Followed before Any Work is Carried Out on The Injection System:

- Ensure that you have the plugs for the unions to be opened (bag of plugs available from the Parts Stores, NISSAN part No:16830 BN700, Renault part No: 77 01 206 804). Plugs are to be used once only. After

use, they must be thrown away (once used they are soiled and cleaning is not sufficient to make them reusable). Unused plugs must be thrown away.

- Ensure that you have hermetically resealable plastic bags for storing removed parts. There is less risk of parts stored in this way being exposed to contamination. The bags must be used only once, and after use they must be thrown away.
- Ensure that lint-free towelettes are used for injection pump related service purposes. The use of a normal cloth or paper for cleaning purposes is prohibited. They are not lint-free and may contaminate the fuel circuit of the system. A lint-free cloth should only be used once.

Instructions to Be Followed before Opening The Fuel Circuit:

Use new thinner for each operation (used thinner contains impurities). Pour it into a clean receptacle.
For each operation, use a clean brush in good condition (the brush must not shed its bristles).
Use a brush and thinners to clean the connections to be opened.
Blow compressed air over the cleaned parts (tools, cleaned the same way as the parts, connections and injection system zone). Check that no bristles remain adhering.
Wash your hands before and during the operation if necessary.
When wearing leather protective gloves, cover them with latex gloves.

Instructions to Be Followed During The Operation:

As soon as the circuit is open, all openings must be plugged to prevent impurities from entering the system.
The plugs to be used are available from the Parts Stores. They must not, under any circumstances, be reused.
Close the resealable bag, even if it has to be reopened shortly afterwards. The ambient atmosphere carries impurities.
All components removed from the injection system must be stored in a hermetically sealed plastic bag once the plugs have been inserted.
The use of a brush, thinner, bellows, sponge or normal cloth is strictly forbidden once the circuit has been opened.
These items are likely to allow contaminants to enter the system.
A new component replacing an old one must not be removed from its packaging until it is to be fitted to the vehicle.

ECM REPLACEMENT, PROGRAMMING OR REPROGRAMMING OPERATION

Following items can be (re)programmed via the DLC using the CONSULT-II.

- System configuration
- Injector adjustment value

Before replacing the ECM in after-sales operations, the following data must be readout using CONSULT-II:

- The injector adjustment values to be noted to appropriate paper or CONSULT-II copying function.

NOTE:
The injector adjustment value for each fuel injector must be entered manually after the ECM has been replaced or (re)programmed by reading the injector adjustment value on each fuel injector.
IMPORTANT: It is not possible to test an ECM from the parts stores because it cannot be fitted to any other vehicle.

REPLACING THE INJECTORS

NOTE:
The injector adjustment value is a calibration made on each fuel injector in the factory in order to adjust its flow precisely.
These injector adjustment values are written on a label affixed to each fuel injector then entered into the ECM which then controls each fuel injector taking into account its individual manufacturing variations.
When replacing one or more fuel injectors, the parameters of the fuel injector output concerned must be modified. The system can be configured using the CONSULT-II.

Trouble Diagnosis - Symptom

BBS004U2

NOTE:
Only consult this customer complaint after a complete check using the CONSULT-II.

Symptom		Trouble diagnosis	Reference page
No communication with the ECM		CHART 1	EC-1635
Starting malfunction	The engine does not start	CHART 2	EC-1636
	The engine starts with difficulty or starts then stalls	CHART 3	EC-1638
	Starting difficult with warm engine	CHART 4	EC-1640
Idle speed malfunction	Rough idle speed (pumping)	CHART 5	EC-1641
	Idle speed too high or too low	CHART 6	EC-1642
Behavior while driving	Unexpected acceleration/deceleration and engine stalling	CHART 7	EC-1642
	Response malfunction	CHART 8	EC-1643
	Engine stop (timing)	CHART 9	EC-1644
	Engine jerking	CHART 10	EC-1646
	Lack of power	CHART 11	EC-1647
	Too much power	CHART 12	EC-1648
Road holding (continued)	Excessive consumption	CHART 13	EC-1649
	Overspeed when lifting off accelerator or changing gear	CHART 14	EC-1650
	Engine dies when pulling away	CHART 15	EC-1651
	The engine does not stop	CHART 16	EC-1652
Noise, odors or smoke	Clanking engine, noisy engine	CHART 17	EC-1653
	Squalling noise	CHART 18	EC-1654
	General mechanical noises	CHART 19	EC-1654
	Blue, white or black smoke	CHART 20	EC-1656
	Exhaust odors	CHART 21	EC-1657
	Diesel odors	CHART 22	EC-1657
	Smoke (blue, white or black) on acceleration	CHART 23	EC-1658

CHART 1: NO COMMUNICATION WITH THE ECM

1. INSPECTION START

Ensure that CONSULT-II is not causing the malfunction by trying to establish dialogue with an ECM on another vehicle. If the CONSULT-II is not at malfunction, and dialogue cannot be established with any other ECM on the same vehicle, the cause could be a suspected ECM interfering on the CAN communication line.
Check the voltage of the battery and carry out the operations necessary to obtain a voltage which is to specification (9.5 V < U battery < 17.5 V).

>> GO TO 2.

2. CHECK CAN COMMUNICATION

Perform trouble diagnosis on the CAN communication line using CONSULT-II.

>> GO TO 3.

3. CHECK ECM GROUND

Check the ECM earth (ground) point on the side strut tower.

>> GO TO 4.

4. CHECK DLC CONNECTOR CIRCUIT

Check the followings:

- Connection between the CONSULT-II and the DLC (wiring in good condition)
- Engine and passenger compartment fuses

>> GO TO 5.

5. CHECK DLC CONNECTOR CIRCUIT

Check for the presence of 12 V on terminal 16 with ignition switch OFF, 12 V on terminal 8 with ignition switch ON and an earth (ground) on terminals 4 and 5 of the data link connector.
Repair if necessary.

>> GO TO 6.

6. CHECK ECM POWER SUPPLY AND GROUND CIRCUIT

Connect the CONSULT-II and check the insulation, continuity and absence of interference resistance of the connections:

- ECM terminal 104 and IPDM E/R harness connector terminal 29
- ECM terminal 109 and IPDM E/R harness connector terminal 32
- ECM terminal 110 and IPDM E/R harness connector terminal 32
- ECM terminal 22 and fuse block M7
- ECM terminal 25 and ground
- ECM terminal 26 and ground
- ECM terminal 27 and ground
- ECM terminal 32 and ground
- ECM terminal 2 and DLC terminal 7
  (Refer to EC-1698, "Wiring Diagram" .)

Repair if necessary.

>> **INSPECTION END**

CHART 2: THE ENGINE DOES NOT START

1. CHECK FUEL

Check that the fuel reservoir is correctly filled and with the right fuel.

>> GO TO 2.

2. CHECK ENGINE OIL AND ENGINE COOLANT LEVEL

Check the engine oil and coolant levels.

>> GO TO 3.

3. CHECK INLET AIR CIRCUIT

Check the inlet air circuit using TEST 5. Refer to EC-1663, "TEST 5: AIR INLET CIRCUIT CHECK" .

>> GO TO 4.

4. CHECK CATALYTIC CONVERTER

Is the catalytic converter clogged or deteriorated?

Yes or No

Yes >> Replace the catalytic converter.
No >> GO TO 5.

5. CHECK ELECTRICAL CIRCUIT

Check the electrical circuit using TEST 2. Refer to EC-1661, "TEST 2: ELECTRICAL CIRCUIT CHECK" .

>> GO TO 6.

6. CHECK DISTRIBUTION

Is the distribution properly adjusted?

Yes or No

Yes >> GO TO 7.
No >> Perform the required repairs.

7. CHECK WIRING HARNESS

Visually check the condition of the engine wiring harness.

>> GO TO 8.

8. CHECK STARTER

Is the starter working properly (minimum engine speed of 200 rpm)?

Yes or No

Yes >> GO TO 9.
No >> Perform the required repairs.

9. CHECK COMPRESSION PRESSURE

Are the compressions correct?

Yes or No

Yes >> GO TO 10.
No >> Perform the required repairs.

10. CHECK GLOW PLUG

Check the condition of the glow plugs.

>> GO TO 11.

11. CHECK ENGINE PARAMETERS

Check the engine parameters using TEST 4. Refer to EC-1663, "TEST 4: PARAMETER CHECK" .

>> GO TO 12.

12. CHECK FUEL RAIL PRESSURE

Does “RAIL PRESSURE” indicate less than 50 bar under + following contact?

Yes or No

Yes >> GO TO 13.
No >> Perform the trouble diagnosis for FRP sensor. Refer to EC-1736, "DTC P0190 FRP SENSOR" .

13. CHECK LOW PRESSURE CIRCUIT

Check the low pressure circuit using TEST 1. Refer to EC-1660, "TEST 1: LOW PRESSURE CIRCUIT CHECK" .

>> GO TO 14.

14. CHECK HIGH PRESSURE CIRCUIT

Visually check the high pressure circuit for leaks using TEST 8. Refer to EC-1665, "TEST 8: HIGH-PRESSURE CIRCUIT LEAK CHECK" .

>> GO TO 15.

15. CHECK HIGH PRESSURE SYSTEM

Check the high pressure system using TEST 7. Refer to EC-1664, "TEST 7: HIGH PRESSURE SYSTEM CHECK" .

>> GO TO 16.

16. CEHCK ECM

Check the ECM using TEST 6. Refer to EC-1664, "TEST 6: ECM CHECK" .

>> **INSPECTION END**

CHART 3: THE ENGINE STARTS WITH DIFFICULTY OR STARTS THEN STALLS

1. CHECK FUEL

Check that the fuel reservoir is correctly filled and with the right fuel.

>> GO TO 2.

2. CHECK ENGINE OIL AND ENGINE COOLANT LEVEL

Check the engine oil and coolant levels.

>> GO TO 3.

3. CHECK INLET AIR CIRCUIT

Check the inlet air circuit using TEST 5. Refer to EC-1663, "TEST 5: AIR INLET CIRCUIT CHECK" .

>> GO TO 4.

4. CHECK CATALYTIC CONVERTER

Is the catalytic converter clogged or deteriorated?

Yes or No

Yes >> Replace the catalytic converter.
No >> GO TO 5.

5. CHECK DISTRIBUTION

Is the distribution properly adjusted?

Yes or No

Yes >> GO TO 6.
No >> Perform the required repairs.

6. CHECK COMPRESSION PRESSURE

Are the compressions correct?

Yes or No

Yes >> GO TO 7.
No >> Perform the required repairs.

7. CHECK GLOW PLUG

Check the condition of the glow plugs.

>> GO TO 8.

8. CHECK WIRING HARNESS

Visually check the condition of the engine wiring harness.

>> GO TO 9.

9. CHECK ELECTRICAL CIRCUIT

Check the electrical circuit using TEST 2. Refer to EC-1661, "TEST 2: ELECTRICAL CIRCUIT CHECK" .

>> GO TO 10.

10. CHECK ENGINE PARAMETERS

Check the engine parameters using TEST 4. Refer to EC-1663, "TEST 4: PARAMETER CHECK" .

>> GO TO 11.

11. CHECK LOW PRESSURE CIRCUIT

Check the low pressure circuit using TEST 1. Refer to EC-1660, "TEST 1: LOW PRESSURE CIRCUIT CHECK" .

>> GO TO 12.

12. CHECK HIGH PRESSURE CIRCUIT

Visually check the high pressure circuit for leaks using TEST 8. Refer to EC-1665, "TEST 8: HIGH-PRESSURE CIRCUIT LEAK CHECK" .

>> GO TO 13.

13. CHECK HIGH PRESSURE SYSTEM

Check the high pressure system using TEST 7. Refer to EC-1664, "TEST 7: HIGH PRESSURE SYSTEM CHECK" .

>> GO TO 14.

14. CHECK ECM

Check the ECM using TEST 6. Refer to EC-1664, "TEST 6: ECM CHECK" .

>> **INSPECTION END**

CHART 4: STARTING DIFFICULT WITH WARM ENGINE

1. CHECK FUEL

Check that the fuel reservoir is correctly filled and with the right fuel.

>> GO TO 2.

2. CHECK INLET AIR CIRCUIT

Check the inlet air circuit using TEST 5. Refer to EC-1663, "TEST 5: AIR INLET CIRCUIT CHECK" .

>> GO TO 3.

3. CHECK COMPRESSION PRESSURE

Are the compressions correct?

Yes or No

Yes >> GO TO 4.
No >> Perform the required repairs.

4. CHECK CATALYTIC CONVERTER

Is the catalytic converter clogged or deteriorated?

Yes or No

Yes >> Replace the catalytic converter.
No >> GO TO 5.

5. CHECK ENGINE PARAMETERS

Check the engine parameters using TEST 4. Refer to EC-1663, "TEST 4: PARAMETER CHECK" .

>> GO TO 6.

6. CHECK WIRING HARNESS

Visually check the condition of the engine wiring harness.

>> GO TO 7.

7. CHECK LOW PRESSURE CIRCUIT

Check the low pressure circuit using TEST 1. Refer to EC-1660, "TEST 1: LOW PRESSURE CIRCUIT CHECK" .

>> GO TO 8.

8. CHECK FUEL INJECTORS

Operate the fuel injectors via ACTIVE TEST with CONSULT-II.

>> GO TO 9.

9. CHECK FUEL INECTORS

Is movement of the valve audible 1 m away from the vehicle?

Yes or No

Yes >> GO TO 10.
No >> Perform TEST 11. Refer to EC-1666, "TEST 11: FUEL FILTER CHECK" . If TEST 11 is in order, replace the malfunctioning fuel injector(s).

10. CHECK ECM

Check the ECM using TEST 6. Refer to EC-1664, "TEST 6: ECM CHECK" .

>> **INSPECTION END**

CHART 5: ROUGH IDLE SPEED (PUMPING)

1. CHECK LOW PRESSURE CIRCUIT

Check the low pressure circuit using TEST 1. Refer to EC-1660, "TEST 1: LOW PRESSURE CIRCUIT CHECK" .

>> GO TO 2.

2. CHECK ENGINE PARAMETERS

Check the engine parameters using TEST 4. Refer to EC-1663, "TEST 4: PARAMETER CHECK" .

>> GO TO 3.

3. CHECK WIRING HARNESS

Is the engine wiring harness cut off or jammed?

Yes or No

Yes >> Carry out the required repairs.
No >> GO TO 4.

4. CHECK FUEL PUMP

Is the high pressure actuator blocked?

Yes or No

Yes >> Carry out the required repairs.
No >> GO TO 5.

5. CHECK HIGH PRESSURE CIRCUIT

Check for leaks in the high pressure circuit using TEST 8. Refer to EC-1665, "TEST 8: HIGH-PRESSURE CIRCUIT LEAK CHECK" .

>> GO TO 6.

6. CHECK GLOW PLUG

Check that the glow plugs are working properly.
Is the glow plug resistance above 1Ω?

Yes or No

Yes >> Replace the glow plugs.
No >> GO TO 7.

7. CHECK COMPRESSION PRESSURE

Are the compressions correct?

Yes or No

Yes >> GO TO 8.
No >> Carry out the required repairs.

8. CHECEK FUEL INJECTORS

Check the fuel injectors using TEST 3. Refer to EC-1662, "TEST 3: FUEL INJECTOR CHECK" .

>> GO TO 9.

9. CHECK FUEL PUMP

Check the high pressure pump using TEST 7. Refer to EC-1664, "TEST 7: HIGH PRESSURE SYSTEM CHECK" .

>> **INSPECTION END**

CHART 6: IDLE SPEED TOO HIGH/TOO LOW

1. CHECK ENGINE PARAMETERS

Check the engine parameters using TEST 4. Refer to EC-1663, "TEST 4: PARAMETER CHECK" .

>> GO TO 2.

2. CHECK ELECTRICAL CIRCUIT

Check the electrical circuit using TEST 2. Refer to EC-1661, "TEST 2: ELECTRICAL CIRCUIT CHECK" .

>> GO TO 3.

3. CHECK CLUTCH LINKAGE

Is the clutch linkage correct?

Yes or No

Yes >> GO TO 4.
No >> Carry out the required repairs

4. CHECK ECM

Check the ECM using TEST 6. Refer to EC-1664, "TEST 6: ECM CHECK" .

>> **INSPECTION END**

CHART 7: UNEXPECTED ACCELERATION/DECELERATION AND ENGINE OVERCHARGING

1. CHECK ENGINE PARAMETERS

Check the engine parameters using TEST 4. Refer to EC-1663, "TEST 4: PARAMETER CHECK" .

>> GO TO 2.

2. CHECK INLET AIR CIRCUIT

Check the air inlet circuit using TEST 5. Refer to EC-1663, "TEST 5: AIR INLET CIRCUIT CHECK" .

>> GO TO 3.

3. CHECK WIRING HARNESS

Is the engine wiring harness cut off or pinched?

Yes or No

Yes >> Carry out the required repairs.
No >> GO TO 4.

4. CHECK FUEL INJECTORS

Check the fuel injectors using TEST 3. Refer to EC-1662, "TEST 3: FUEL INJECTOR CHECK" .

>> GO TO 5.

5. CHECK ENGINE ASPIRATION

Check that the engine has not aspirated its oil (engine stalls).

Yes or No

Yes >> Carry out the required repairs.
No >> GO TO 6.

6. CHECK ECM

Check the ECM using TEST 6. Refer to EC-1664, "TEST 6: ECM CHECK" .

>> **INSPECTION END**

CHART 8: RESPONSE MALFUNCTION

1. CHECK INLET AIR CIRCUIT

Check the inlet air circuit using TEST 5. Refer to EC-1663, "TEST 5: AIR INLET CIRCUIT CHECK" .

>> GO TO 2.

2. CHECK COMPRESSION PRESSURE

Are the compressions correct?

Yes or No

Yes >> GO TO 3.
No >> Carry out the required repairs.

3. CHECK ENGINE PARAMETERS

Check the engine parameters using TEST 4. Refer to EC-1663, "TEST 4: PARAMETER CHECK" .

>> GO TO 4.

4. CHECK TURBOCHARGER

Check that the turbocharger is working properly.
Is the turbocharger correct?

Yes or No

Yes >> GO TO 5.
No >> Carry out the required repairs.

5. CHECK LOW PRESSURE CIRCUIT

Check the low pressure circuit using TEST 1. Refer to EC-1660, "TEST 1: LOW PRESSURE CIRCUIT CHECK" .

>> GO TO 6.

6. CHECK HIGH PRESSURE CIRCUIT

Check for leaks in the high pressure circuit using TEST 8. Refer to EC-1665, "TEST 8: HIGH-PRESSURE CIRCUIT LEAK CHECK" .

>> GO TO 7.

7. CHECK FUEL PUMP

Is the high pressure actuator blocked?

Yes or No

Yes >> Carry out the required repairs.
No >> GO TO 8.

8. CHECK FUEL INJECTORS

Check the fuel injectors using TEST 3. Refer to EC-1662, "TEST 3: FUEL INJECTOR CHECK" .

>> GO TO 9.

9. CHECK ECM

Check the ECM using TEST 6. Refer to EC-1664, "TEST 6: ECM CHECK" .

>> **INSPECTION END**

CHART 9: ENGINE STOP/STALLING

1. CHECK FUEL

Check that the fuel reservoir is correctly filled and with the right fuel.

>> GO TO 2.

2. CHECK ENGINE OIL AND ENGINE COOLANT

Check the engine oil and coolant levels.

>> GO TO 3.

3. CEHCK ENGINE ASPIRATION

Check that the engine has not aspirated its oil (engine racing).

>> GO TO 4.

4. CHECK INLET AIR CIRCUIT

Check the inlet air circuit using TEST 5. Refer to EC-1663, "TEST 5: AIR INLET CIRCUIT CHECK" .

>> GO TO 5.

5. CHECK CATALYTIC CONVERTER

Is the catalytic converter clogged or deteriorated?

Yes or No

Yes >> Replace the catalytic converter.
No >> GO TO 6.

6. CHECK WIRING HARNESS

Visually check the condition of the engine wiring harness.

>> GO TO 7.

7. CHECK ELECTRICAL CIRCUIT

Check the electrical circuit using TEST 2. Refer to EC-1661, "TEST 2: ELECTRICAL CIRCUIT CHECK" .

>> GO TO 8.

8. CHECK ENGINE PARAMETERS

Check the engine parameters using TEST 4. Refer to EC-1663, "TEST 4: PARAMETER CHECK" .

>> GO TO 9.

9. CHECK LOW PRESSURE CIRCUIT

Check the low pressure circuit using TEST 1. Refer to EC-1660, "TEST 1: LOW PRESSURE CIRCUIT CHECK" .

>> GO TO 10.

10. CHECK HIGH PRESSURE CURCUIT

Visually check the high pressure circuit for leaks using TEST 8. Refer to EC-1665, "TEST 8: HIGH-PRESSURE CIRCUIT LEAK CHECK" .

>> GO TO 11.

11. CHECK HIGH PRESSURE SYSTEM

Check the high pressure system using TEST 7. Refer to EC-1660, "Trouble Diagnosis - Basic Test Procedure" .

>> GO TO 12.

12. CHECK ECM

Check the ECM using TEST 6. Refer to EC-1664, "TEST 6: ECM CHECK" .

>> **INSPECTION END**

CHART 10: ENGINE JERKING

1. CHECK FUEL

Check that the fuel tank is correctly filled and that the fuel type is suitable.
Is the fuel type suitable and the tank correctly filled?

Yes or No

Yes >> GO TO 2.
No >> Refill the fuel tank correctly.

2. CHECK LOW PRESSURE CIRCUIT

Check the low pressure circuit using TEST 1. Refer to EC-1660, "TEST 1: LOW PRESSURE CIRCUIT CHECK" .

>> GO TO 3.

3. CHECK ENGINE PARAMETERS

Check the engine parameters using TEST 4. Refer to EC-1663, "TEST 4: PARAMETER CHECK" .

>> GO TO 4.

4. CHECK WIRING HARNESS

Is the engine wiring harness cut off or pinched?

Yes or No

Yes >> Carry out the required repairs.
No >> GO TO 5.

5. CEHCK GLOW PLUG

Check that the glow plugs are working properly.
Is the glow plug resistance above 1Ω?

Yes or No

Yes >> Replace the glow plugs.
No >> GO TO 6.

6. CHECK COMPRESSION PRESSURE

Are the compressions correct?

Yes or No

Yes >> GO TO 7.
No >> Carry out the required repairs.

7. CHECK VALVE CLEARANCE

Is the valve clearance properly adjusted?

Yes or No

Yes >> GO TO 8.
No >> Make the necessary adjustments.

8. CHECK FUEL PUMP

Check the high pressure pump using TEST 7. Refer to EC-1664, "TEST 7: HIGH PRESSURE SYSTEM CHECK" .

>> GO TO 9.

9. CHECK ECM

Check the ECM using TEST 6. Refer to EC-1664, "TEST 6: ECM CHECK" .

>> **INSPECTION END**

CHART 11: LACK OF POWER

1. CHECK ENGINE PARAMETERS

Check the engine parameters using TEST 4. Refer to EC-1663, "TEST 4: PARAMETER CHECK" .

>> GO TO 2.

2. CHECK INLET AIR CIRCUIT

Check the inlet air circuit using TEST 5. Refer to EC-1663, "TEST 5: AIR INLET CIRCUIT CHECK" .

>> GO TO 3.

3. CHECK ENGINE OIL LEVEL

Is the engine oil level correct?

Yes or No

Yes >> GO TO 4.
No >> Top up the oil.

4. CEHCK CATALYTIC CONVERTER

Is the catalytic converter sealed off or damaged?

Yes or No

Yes >> Replace the catalytic converter.
No >> GO TO 5.

5. CHECK TURBOCHARGER

Check that the turbocharger is working properly.
Is the turbocharger correct?

Yes or No

Yes >> GO TO 6.
No >> Carry out the required repairs.

6. CHECK LOW PRESSURE CURCUIT

Check the low pressure circuit using TEST 1. Refer to EC-1660, "TEST 1: LOW PRESSURE CIRCUIT CHECK" .

>> GO TO 7.

7. CHECK FUEL INJECTORS

Check the fuel injectors using TEST 3. Refer to EC-1662, "TEST 3: FUEL INJECTOR CHECK" .

>> GO TO 8.

8. CEHCK COMPRESSION PRESSURE

Are the compressions correct?

Yes or No

Yes >> GO TO 9.
No >> Carry out the required repairs.

9. CEHCK VALVE CLEARANCE

Is the valve clearance properly adjusted?

Yes or No

Yes >> **INSPECTION END**
No >> Make the necessary adjustments.

CHART 12: TOO MUCH POWER

1. CHECK ENGINE PARAMETERS

Check the engine parameters using TEST 4. Refer to EC-1663, "TEST 4: PARAMETER CHECK" .

>> GO TO 2.

2. CEHCK INLET AIR CIRCUIT

Check the inlet air circuit using TEST 5. Refer to EC-1663, "TEST 5: AIR INLET CIRCUIT CHECK" .

>> GO TO 3.

3. CHECK ENGINE ASPIRATION

Check that the engine has not aspirated its oil (engine stalls).

Yes or No

Yes >> Carry out the required repairs.
No >> GO TO 4.

4. CHECK FUEL INJECTORS

Check the fuel injectors using TEST 3. Refer to EC-1662, "TEST 3: FUEL INJECTOR CHECK" .

>> GO TO 5.

5. CHECK ECM

Check the ECM using TEST 6. Refer to EC-1664, "TEST 6: ECM CHECK" .

>> **INSPECTION END**

CHART 13: EXCESSIVE CONSUMPTION

1. CHECK LOW PRESSURE CIRCUIT

Check the low pressure circuit using TEST 1. Refer to EC-1660, "TEST 1: LOW PRESSURE CIRCUIT CHECK" .

>> GO TO 2.

2. CHECK FUEL PUMP

Is the high pressure actuator leaking?

Yes or No

Yes >> Carry out the required repairs.
No >> GO TO 3.

3. CHECK FUEL PUMP TEMPERATURE SENSOR

Is the fuel pump temperature sensor leaking?

Yes or No

Yes >> Replace the fuel pump temperature sensor.
No >> GO TO 4.

4. CHECK LOW PRESSURE CIRCUIT

Check the low pressure circuit using TEST 1. Refer to EC-1660, "TEST 1: LOW PRESSURE CIRCUIT CHECK" .

>> GO TO 5.

5. CHECK FUEL INJECTORS

Check the fuel injectors using TEST 3. Refer to EC-1662, "TEST 3: FUEL INJECTOR CHECK" .

>> GO TO 6.

6. CHECK HIGH PRESSURE CIRCUIT

Check for leaks in the high pressure circuit using TEST 8. Refer to EC-1665, "TEST 8: HIGH-PRESSURE CIRCUIT LEAK CHECK" .

>> GO TO 7.

7. CHECK INLET AIR CIRCUIT

Check the inlet air circuit using TEST 5. Refer to EC-1663, "TEST 5: AIR INLET CIRCUIT CHECK" .

>> GO TO 8.

8. CHECK ENGINE PARAMETERS

Check the engine parameters using TEST 4. Refer to EC-1663, "TEST 4: PARAMETER CHECK" .

>> GO TO 9.

9. CHECK ENGINE OIL LEVEL

Is the engine oil level correct?

Yes or No

Yes >> GO TO 10.
No >> Top up the oil.

10. CHECK CATALYTIC CONVERTER

Is the catalytic converter clogged or damaged?

Yes or No

Yes >> Replace the catalytic converter.
No >> GO TO 11.

11. CHECK TURBOCHARGER

Check that the turbocharger is working properly.
Is the turbocharger correct?

Yes or No

Yes >> GO TO 12.
No >> Carry out the required repairs.

12. CHECK COMPRESSION PRESSURE

Are the compressions correct?

Yes or No

Yes >> GO TO 13.
No >> Carry out the required repairs.

13. CHECK ECM

Check the ECM using TEST 6. Refer to EC-1664, "TEST 6: ECM CHECK" .

>> **INSPECTION END**

CHART 14: OVERSPEED WHEN LIFTING OFF ACCELERATOR OR CHANGING GEAR

1. CHECK ACCELERATOR PEDAL

Check that there is no obstacle obstructing the accelerator pedal travel (carpet, hard spot, etc.).

>> GO TO 2.

2. CHECK ENGINE PARAMETERS

Check the engine parameters using TEST 4. Refer to EC-1663, "TEST 4: PARAMETER CHECK" .

>> GO TO 3.

3. CHECK WIRING HARNESS

Is the engine wiring harness cut or pinched?

Yes or No

Yes >> Carry out the required repairs.
No >> GO TO 4.

4. CHECK CLUTCH LINKAGE

Is the clutch linkage properly adjusted?

Yes or No

Yes >> GO TO 5.
No >> Carry out the required repairs.

5. CHECK ENGINE ASPIRATION

Check that the engine has not aspirated its oil (engine stalls).

Yes or No

Yes >> Carry out the required repairs.
No >> GO TO 6.

6. CHECK TURBOCHARGER

Check that the turbocharger is working properly.
Is the turbocharger correct?

Yes or No

Yes >> GO TO 7.
No >> Carry out the required repairs.

7. CHECK INJECTORS

Check the injectors using TEST 3. Refer to EC-1662, "TEST 3: FUEL INJECTOR CHECK" .

>> GO TO 8.

8. CHECK ECM

Check the ECM using TEST 6. Refer to EC-1664, "TEST 6: ECM CHECK" .

>> **INSPECTION END**

CHART 15: ENGINE DIES ON PULLING AWAY

1. CHECK CLUTCH PEDAL

Is the clutch pedal free travel correctly adjusted?

Yes or No

Yes >> GO TO 2.
No >> Carry out the required repairs.

2. CHECK ENGINE PARAMETERS

Check the engine parameters using TEST 4. Refer to EC-1663, "TEST 4: PARAMETER CHECK" .

>> GO TO 3.

3. CHECK INLET AIR CIRCUIT

Check the inlet air circuit using TEST 5. Refer to EC-1663, "TEST 5: AIR INLET CIRCUIT CHECK" .

>> GO TO 4.

4. CHECK CTALYTIC CONVETER

Is the catalytic converter clogged or damaged?

Yes or No

Yes >> Replace the catalytic converter.
No >> GO TO 5.

5. CHECK LOW PRESSURE CIRCUIT

Check the low pressure circuit using TEST 1. Refer to EC-1660, "TEST 1: LOW PRESSURE CIRCUIT CHECK" .

>> GO TO 6.

6. CHECK CLUTCH LINKAGE

Is the clutch linkage properly adjusted?

Yes or No

Yes >> GO TO 7.
No >> Carry out the required repairs.

7. CHECK WIRING HARNESS

Is the engine wiring harness cut or pinched?

Yes or No

Yes >> Carry out the required repairs.
No >> GO TO 8.

8. CHECK ECM

Check the ECM using TEST 6. Refer to EC-1664, "TEST 6: ECM CHECK" .

>> **INSPECTION END**

CHART 16: ENGINE BACKFIRES, ENGINE NOISE

1. CHECK FUEL

Check that the fuel reservoir is correctly filled and with the right fuel.

>> GO TO 2.

2. CHECK ENGINE OIL AND ENGINE COOLANT LEVEL

Check the engine oil and coolant levels.

>> GO TO 3.

3. CHECK COMPRESSION PRESSURE

Are the compressions correct?

Yes or No

Yes >> GO TO 4.
No >> Perform the required repairs.

4. CHECK GLOW PLUG

Check the condition of the glow plugs.

>> GO TO 5.

5. CHECK ENGINE PARAMETERS

Check the engine parameters using TEST 4. Refer to EC-1663, "TEST 4: PARAMETER CHECK" .

>> GO TO 6.

6. CHECK INLET AIR CIRCUIT

Check the inlet air circuit using TEST 5. Refer to EC-1663, "TEST 5: AIR INLET CIRCUIT CHECK" .

>> GO TO 7.

7. CHECK LOW PRESSURE CURCUIT

Check the low pressure circuit using TEST 1. Refer to EC-1660, "TEST 1: LOW PRESSURE CIRCUIT CHECK" .

>> GO TO 8.

8. CHECK INJECTORS

Check the injectors using TEST 3. Refer to EC-1662, "TEST 3: FUEL INJECTOR CHECK" .

>> **INSPECTION END**

CHART 17: CLANKING ENGINE, NOISY ENGINE

1. CHECK ENGINE PARAMETERS

Check the engine parameters using TEST 4. Refer to EC-1663, "TEST 4: PARAMETER CHECK" .

>> GO TO 2.

2. CHECK INLET AIR CIRCUIT

Check the inlet air circuit using TEST 5. Refer to EC-1663, "TEST 5: AIR INLET CIRCUIT CHECK" .

>> GO TO 3.

3. CHECK GLOW PLUG

Check that the glow plugs are working properly.
Is the glow plug resistance above 1Ω?

Yes or No

Yes >> Replace the glow plugs.
No >> GO TO 4.

4. CHECK COMPRESSION PRESSURE

Are the compressions correct?

Yes or No

Yes >> GO TO 5.
No >> Carry out the required repairs.

5. CHECK LOW PRESSURE CIRCUIT

Check the low pressure circuit using TEST 1. Refer to EC-1660, "TEST 1: LOW PRESSURE CIRCUIT CHECK" .

>> GO TO 6.

6. CHECK FUEL INECTORS

Check the fuel injectors using TEST 3. Refer to EC-1662, "TEST 3: FUEL INJECTOR CHECK" .

>> **INSPECTION END**

CHART 18: SQUALLING NOISE

1. CHECK ENGINE PARAMETERS

Check the engine parameters using TEST 4. Refer to EC-1663, "TEST 4: PARAMETER CHECK" .

>> GO TO 2.

2. CHECK WIRING HARNESS

Is the engine wiring harness cut or pinched?

Yes or No

Yes >> Carry out the required repairs.
No >> GO TO 3.

3. CHECK FUEL PUMP

Is the high pressure actuator blocked?

Yes or No

Yes >> Carry out the required repairs.
No >> GO TO 4.

4. CHECK ECM

Check the ECM using TEST 6. Refer to EC-1664, "TEST 6: ECM CHECK" .

>> **INSPECTION END**

CHART 19: VARIOUS MECHANICAL NOISES

1. CHECK FUEL INJECOTR OPERATION

Check that the fuel injectors are not making a buzzing noise (injector discharge).

Yes or No

Yes >> Carry out the required repairs.
No >> GO TO 2.

2. CHECK FUEL INJECTOR INSTALLATION

Are the mounting clips on the fuel injector pipes broken or missing?

Yes or No

Yes >> Carry out the required repairs.
No >> GO TO 3.

3. CHECK ENGINE PARAMETERS

Check the engine parameters using TEST 4. Refer to EC-1663, "TEST 4: PARAMETER CHECK" .

>> GO TO 4.

4. CHECK CATALYTIC CONVERTER

Is the catalytic converter clogged or damaged?

Yes or No

Yes >> Replace the catalytic converter.
No >> GO TO 5.

5. CHECK INLET AIR CIRCUIT

Check the inlet air circuit using TEST 5. Refer to EC-1663, "TEST 5: AIR INLET CIRCUIT CHECK" .

>> GO TO 6.

6. CHECK FUEL INJECTORS

Check the fuel injectors using TEST 3. Refer to EC-1662, "TEST 3: FUEL INJECTOR CHECK" .

>> GO TO 7.

7. CHECK CLUTCH LINKAGE

Is the clutch linkage properly adjusted?

Yes or No

Yes >> GO TO 8.
No >> Carry out the required repairs.

8. CHECK TURBOCHARGER

Check that the turbocharger is working properly.
Is the turbocharger correct?

Yes or No

Yes >> GO TO 9.
No >> Carry out the required repairs.

9. CHECK VALVE CLEARANCE

Is the valve clearance properly adjusted?

Yes or No

Yes >> **INSPECTION END**
No >> Make the necessary adjustments.

CHART 20: EXHAUST ODOURS

1. CHECK ENGINE PARAMETERS

Check the engine parameters using TEST 4. Refer to EC-1663, "TEST 4: PARAMETER CHECK" .

>> GO TO 2.

2. CHECK INLET AIR CIRCUIT

Check the inlet air circuit using TEST 5. Refer to EC-1663, "TEST 5: AIR INLET CIRCUIT CHECK" .

>> GO TO 3.

3. CHECK ENGINE ASPIRATION

Check that the engine has not aspirated its oil (engine stalls).

Yes or No

Yes >> Carry out the required repairs.
No >> GO TO 4.

4. CHECK TURBOCHARGER

Check that the turbocharger is working properly.
Is the turbocharger correct?

Yes or No

Yes >> GO TO 5.
No >> Carry out the required repairs.

5. CHECK ENGINE OIL

Is the engine oil level correct?

Yes or No

Yes >> GO TO 6.
No >> Top up the oil.

6. CHECK CATALYTIC CONVETER

Is the catalytic converter clogged or damaged?

Yes or No

Yes >> Replace the catalytic converter.
No >> GO TO 7.

7. CHECK FUEL INJECTORS

Check the fuel injectors using TEST 3. Refer to EC-1662, "TEST 3: FUEL INJECTOR CHECK" .

>> GO TO 8.

8. CHECK ECM

Check the ECM using TEST 6. Refer to EC-1664, "TEST 6: ECM CHECK" .

>> **INSPECTION END**

CHART 21: DIESEL ODOURS

1. CHECK LOW PRESSURE CIRCUIT

Check the low pressure circuit using TEST 1. Refer to EC-1660, "TEST 1: LOW PRESSURE CIRCUIT CHECK" .

>> GO TO 2.

2. CHECK FUEL PUMP

Is the high pressure actuator leaking?

Yes or No

Yes >> Carry out the required repairs.
No >> GO TO 3.

3. CHECK FUEL PUMP TEMPERATURE SENSOR

Is the fuel pump temperature sensor leaking?

Yes or No

Yes >> Replace the fuel temperature sensor.
No >> GO TO 4.

4. CHECK FUEL INJECTORS

Check the fuel injectors using TEST 3. Refer to EC-1662, "TEST 3: FUEL INJECTOR CHECK" .

>> GO TO 5.

5. CHECK HIGH PRESSURE CIRCUIT

Check for leaks in the high pressure circuit using TEST 8. Refer to EC-1665, "TEST 8: HIGH-PRESSURE CIRCUIT LEAK CHECK" .

>> **INSPECTION END**

CHART 22: BLUE, WHITE OR BLACK SMOKE

1. CHECK FUEL

Check that the fuel reservoir is correctly filled and with the right fuel.

>> GO TO 2.

2. CHECK ENGINE OIL AND ENGINE COOLANT LEVEL

Check the engine oil and coolant levels.

>> GO TO 3.

3. CHECK ENGINE ASPIRATION

Check that the engine has not aspirated its oil (engine racing).

>> GO TO 4.

4. CHECK COMPRESSION PRESSURE

Are the compressions correct?

Yes or No

Yes >> GO TO 5.
No >> Perform the required repairs.

5. CHECK GLOW PLUG

Check the condition of the glow plugs.

>> GO TO 6.

6. CHECK CATALYTIC CONVERTER

Is the catalytic converter clogged or deteriorated?

Yes or No

Yes >> Replace the catalytic converter.
No >> GO TO 7.

7. CHECK INLET AIR CIRCUIT

Check the inlet air circuit using TEST 5. Refer to EC-1663, "TEST 5: AIR INLET CIRCUIT CHECK" .

>> GO TO 8.

8. CHECK ENGINE PARAMETERS

Check the engine parameters using TEST 4. Refer to EC-1663, "TEST 4: PARAMETER CHECK" .

>> GO TO 9.

9. CHECK LOW PRESSURE CIRCUIT

Check the low pressure circuit using TEST 1. Refer to EC-1660, "TEST 1: LOW PRESSURE CIRCUIT CHECK" .

>> GO TO 10.

10. CHECK FUEL INJECTORS

Check the fuel injectors using TEST 3. Refer to EC-1662, "TEST 3: FUEL INJECTOR CHECK" .

>> **INSPECTION END**

CHART 23: SMOKE (BLUE, BLACK OR WHITE) ON ACCELERATING

1. CHECK FUEL

Check that the fuel reservoir is correctly filled and with the right fuel.

>> GO TO 2.

2. CHECK ENGINE OIL AND ENGINE COOLANT LEVEL

Check the engine oil and coolant levels.

>> GO TO 3.

3. CHECK ENGINE ASPIRATION

Check that the engine has not aspirated its oil (engine racing).

>> GO TO 4.

4. CHECK COMPRESSION PRESSURE

Are the compressions correct?

Yes or No

Yes >> GO TO 5.
No >> Perform the required repairs.

5. CHECK GLOW PLUG

Check the condition of the glow plugs.

>> GO TO 6.

6. CHECK CATALYTIC CONVERTER

Is the catalytic converter clogged or deteriorated?

Yes or No

Yes >> Replace the catalytic converter.
No >> GO TO 7.

7. CHECK INLET AIR CIRCUIT

Check the inlet air circuit using TEST 5. Refer to EC-1663, "TEST 5: AIR INLET CIRCUIT CHECK" .

>> GO TO 8.

8. CHECK TURBOCHARGER

Ensure that the turbo compressor is working correctly.
Is the turbo compressor in order?

Yes or No

Yes >> GO TO 9.
No >> Perform the required repairs.

9. CHECK WIRING HARNESS

Visually check the condition of the engine wiring harness.

>> GO TO 9.

10. CHECK ENGINE PARAMETERS

Check the engine parameters using TEST 4. Refer to EC-1663, "TEST 4: PARAMETER CHECK" .

>> GO TO 11.

11. CHECK LOW PRESSURE CIRCUIT

Check the low pressure circuit using TEST 1. Refer to EC-1660, "TEST 1: LOW PRESSURE CIRCUIT CHECK" .

>> GO TO 12.

12. CHECK FUEL INJECTORS

Check the fuel injectors using TEST 3. Refer to EC-1662, "TEST 3: FUEL INJECTOR CHECK" .

>> GO TO 13.

13. CHECK ECM

Check the ECM using TEST 6. Refer to EC-1664, "TEST 6: ECM CHECK" .

>> **INSPECTION END**

Trouble Diagnosis - Basic Test Procedure

BBS004U3

DESCRIPTION

NOTE:
Only consult the tests after following the diagnostic procedure chart.
Some specific checks are grouped under the “tests” heading and are used as required in different diagnostic charts.

Basic test	Trouble diagnosis	Reference page
Low pressure circuit check	TEST 1	EC-1660
Electrical circuit check	TEST 2	EC-1661
Fuel injector check	TEST 3	EC-1662
Parameter check	TEST 4	EC-1663
Air inlet circuit check	TEST 5	EC-1663
ECM check	TEST 6	EC-1664
High pressure pump check	TEST 7	EC-1664
High pressure circuit leak check	TEST 8	EC-1665
Fuel injector leak check	TEST 9	EC-1665
Fuel injector return flow in starting phase	TEST 10	EC-1666
Fuel filter check	TEST 11	EC-1666

TEST 1: LOW PRESSURE CIRCUIT CHECK

1. CHECK CONFORMITY

Check the conformity of the low pressure connections.
Is the low pressure circuit connection correct?

Yes or No

Yes >> GO TO 2.
No >> Carry out the required repairs.

2. CHECK FOR LEAK

Look for leaks on the unions.
Are there leaks in the hoses and unions?

Yes or No

Yes >> Carry out the required repairs.
No >> GO TO 3.

3. CHECK FUEL FILTER

Check the correctness of the fuel filter.
Is the fuel filter correct?

Yes or No

Yes >> GO TO 4.
No >> Replace the fuel filter with an original part.

4. CHECK FOR WATER

Check for water in the fuel filter.
Is there water in the fuel filter?

Yes or No

Yes >> Drain the fuel filter.
No >> GO TO 5.

5. CHECK FOR AIR BUBBLES

Check for air bubbles in the fuel filter.
Are there any air bubbles in the low pressure circuit?

Yes or No

Yes >> GO TO 6.
No >> GO TO 7.

6. BLEED AIR

Bleed the low pressure circuit.
Place a container under the fuel filter:

- Disconnect the return hose at the fuel filter and block the fuel filter.
- Pump using the vacuum pump until there is no air left.
- Reconnect the return hose immediately.

>> **INSPECTION END**

7. INSPECTION END

Low pressure circuit OK.

>> **INSPECTION END**

TEST 2: ELECTRICAL CIRCUIT CHECK

1. CHECK BATTERY AND ALTERNATOR

Check the battery charge and ensure that the alternator is working properly.
Is the charge circuit correct?

Yes or No

Yes >> GO TO 2.
No >> Carry out the required repairs.

2. CHECK FUSE

Check the fuses.
Are the fuses correct?

Yes or No

Yes >> GO TO 3.
No >> Carry out the required repairs.

3. CHECK ECM RELAY

Check that the ECM relay is in working order.
Is the ECM relay working properly?

Yes or No

Yes >> GO TO 4.
No >> Replace the relay.

4. CHECK ENGINE GROUND

Test the engine ground.
Is the engine ground correct?

Yes or No

Yes >> GO TO 5.
No >> Carry out the required repairs.

5. INSPECTION END

The electrical circuit is OK.

>> **INSPECTION END**

TEST 3: FUEL INJECTOR CHECK

1. VISUALLY CHECK

Visually inspect the fuel injector wells.
Is there fuel in the fuel injector wells?

Yes or No

Yes >> Fuel injector ice leak, replace the fuel injector.
No >> GO TO 2.

2. PERFORM ACTIVE TEST

Perform “ACTIVE TEST”.
Can you hear the fuel injector valve moving?

Yes or No

Yes >> GO TO 3.
No >> Carry out test 11. If test 11 is OK, replace the fuel injector.

3. CHECK RETURN FLOW

Compare the return flow of the four fuel injectors when hot using a measuring cylinder. See TEST 9.
Does one of the four fuel injectors have a greater return flow than the others?

Yes or No

Yes >> Replace the fuel injector with an unusually high return flow (leak at the valve).
No >> GO TO 4.

4. CHECK NO.1 CYLINDER

Disconnect cylinder No. 1 fuel injector.
Is there a noticeable change in engine noise?

Yes or No

Yes >> GO TO 5.
No >> Replace fuel injector No.1 with a new part.

5. CHECK ANOTHER CYLINDER

Reconnect cylinder No. 1 fuel injector.
Carry out the same test on the other cylinders to identify a possible suspected fuel injector.
The injector is sound.

>> **INSPECTION END**

TEST 4: PARAMETER CHECK

1. CHECK INJECTOR ADJUSTMENT VALUE

Use the CONSULT-II to check that injector adjustment value corresponds to the fuel injectors.
Is injector adjustment value correctly filled in?

Yes or No

Yes >> GO TO 3.
No >> GO TO 2.

2. ENTER INJECTOR ADJUSTMENT VALUE

Use the CONSULT-II to program injector adjustment value into the memory, paying attention to the cylinder numbers.

>> **INSPECTION END**

3. INSPECTION END

Check that the “DATA MONITOR” value (parameter) are consistent.

>> **INSPECTION END**

TEST 5: AIR INLET CIRCUIT CHECK

1. CHECK AIR LEAK

Check for the presence of a leak/intake of air.
Presence of a leak/intake of air.

Yes or No

Yes >> Carry out the required repairs.
No >> GO TO 2.

2. CHECK AIR FILTER

Check the condition of the air filter.
Air filter OK.

Yes or No

Yes >> GO TO 3.
No >> Replace the air filter with a new part.

3. CHECK INTAKE MANIFOLD

Check that the intake manifold is not obstructed (dirty).
Is the intake manifold blocked?

Yes or No

Yes >> Clean the intake manifold.
No >> Air circuit OK.

TEST 6: ECM CHECK

1. CHECK ECM CONNECTOR

Check that the ECM connectors are locked correctly.
Are the connectors poorly locked?

Yes or No

Yes >> Lock the connectors correctly.
No >> Replace the ECM.

TEST 7: HIGH PRESSURE SYSTEM CHECK

NOTE:
Certain malfunctions make it impossible to carry out this test, deal with them first.
It is useless and dangerous to engage the starter motor for more than 5 seconds.

1. CHECK FUEL PUMP

It is possible to check the high pressure supply pump capacity by carrying out the following procedure:

- Turn the ignition switch OFF, disconnect the low pressure actuator from the fuel pump (IMV brown connector) and connect a test adaptor (test IMV).
- Disconnect the 4 fuel injectors.
- Turn the ignition switch ON, connect CONSULT-II and select “RAIL PRESSURE” in DATA MONITOR mode.
- Apply brake and start engine. The starter will cut out automatically after 5 seconds.
- Read “RAIL PRESSURE” indication and confirm that maximum value during the test.

Is the rail pressure greater than 1050 bar?

Yes or No

Yes >> GO TO 4.
No >> GO TO 2.

2. CHECK FUEL RAIL PRESSURE

Is the rail pressure greater than 900 bar?

Yes or No

Yes >> GO TO 3.
No >> GO TO 5.

3. CHECK FUEL RAIL PRESSURE

Repeat the test when cold. Engine coolant temperature = Intake air temperature.
Is the rail pressure greater than 1050 bar?

Yes or No

Yes >> GO TO 4.
No >> GO TO 5.

4. CHECK FUEL INJECTOR SEALING

The pump can supply the operating pressure.
Turn the ignition switch OFF and reconnect the 4 fuel injectors and low pressure actuator electrically.
Turn the ignition switch ON, and erase DTCs using the CONSULT-II.
Carry out the trouble diagnosis on the fuel injectors by checking the return volume of the 4 fuel injectors (See TEST 9 fuel injector sealing check).

>> Repair or replace.

5. CHECK STARTING CIRCUIT

Make sure that the starting circuit is working correctly (minimum engine speed 200 rpm).
Turn the ignition switch OFF and reconnect the 4 fuel injectors and low pressure actuator electrically.
Turn the ignition switch ON, and erase the DTCs using CONSULT-II.

>> GO TO 6.

6. CHECK FUEL FILTER

Carry out TEST 11.

>> GO TO 7.

7. CHECK FUEL INJECTOR RETURN VOLUME

Carry out the trouble diagnosis on the fuel injectors by checking the return volume of the 4 fuel injectors.
See TEST 9 or TEST 10 if the engine does not start.
Is TEST 9 or TEST 10 correct?

Yes or No

Yes >> Replace the high pressure pump.
No >> Replace the suspected fuel injector(s).

TEST 8: HIGH-PRESSURE CIRCUIT LEAK CHECK

NOTE:
Certain malfunctions make it impossible to carry out this test, deal with them first.
There is a command that performs a leak test on the high-pressure circuit when the engine is running.
This command can detect a leak on the high-pressure circuit if a union is improperly fitted or bolted, but cannot detect a small leak if a union is not torque tightened.
This command can only be used if the engine temperature is above 60°C.
Perform “HIGH PRESS CIRC LEAK T” in ACTIVE TEST mode, the engine will automatically carry out one cycle of 4 accelerations to raise the pressure in the fuel rail and check whether there are leaks in the high pressure circuit.
Watch out for any objects (tools, etc.) on the sides of the engine housing during the four accelerations (vibrations possible).

TEST 9: FUEL INJECTOR LEAK CHECK

NOTE:
Certain malfunctions make it impossible to carry out this test, deal with them first.
“HIGH PRESS CIRC LEAK T” in ACTIVE TEST mode also allows you to check the return volume of each fuel injector to detect a leak inside the fuel injectors.

Tooling required:

- It is essential to use 4 transparent pipes with an internal diameter of 4 mm and a length of approximately 50 cm.
- 4 graduated measuring cylinders.

PROCEDURE

- Check that the engine coolant temperature is above 60°C.
- Turn ignition switch OFF.
- Disconnect the return pipes from the 4 fuel injectors.
- Fit a plug in the pump venturi tube to prevent the low-pressure circuit from depriming.
- Connect the 4 transparent pipes with an internal diameter of 4 mm and a length of 50 cm in place of the return pipes.
- Immerse these 4 pipes into 4 graduated measuring cylinders.

Having carried out these preparations, start the engine, then let it run for 2 minutes at idle speed.

- Perform “HIGH PRESS CIRC LEAK T” in ACTIVE TEST mode: the engine will automatically perform one cycle of 4 accelerations to raise the pressure in the fuel rail and measure the leaks inside the fuel injectors in these conditions.

- Once the cycle is complete, perform “HIGH PRESS CIRC LEAK T” in ACTIVE TEST mode again for the correct reading of the return volume of each fuel injector.
  At the end of both cycles, the return volume of each fuel injector should be 35 ml at maximum. If the return volume of one of the fuel injectors is above 35 ml, replace the suspected fuel injector.
- Disconnect the 4 transparent pipes and reconnect the fuel injector return circuit.

Watch out for any objects (tools, etc.) at the sides of the engine housing during the four cycles (vibrations possible).

TEST 10: FUEL INJECTOR RETURN FLOW IN STARTING PHASE

NOTE:
Certain malfunctions make it impossible to carry out this test, deal with them first.
It is useless and dangerous to engage the starter motor for more that 5 seconds.
In the event the engine does not start, only the static leak can be measured, that is the leak with the fuel injector closed, inactive and not subject to any high pressure.
Make sure that the starting circuit is working correctly (minimum speed 200 rpm).

Tooling required:

- It is essential to use four transparent pipes with an internal diameter of 4 mm and approximately 50 cm long.
- A test adapter (TEST IMV)

PROCEDURE:

1. Turn ignition switch OFF.
2. Disconnect the four fuel injector return pipes.
3. Fit a plug in the pump venturi tube to prevent the low-pressure circuit from depriming.
4. Connect the four transparent pipes with an internal diameter of 4 mm and a length of approximately 50 cm.
5. Disconnect the low pressure actuator from the pressure (brown IMV connector) and connect the test adapter (test IMV).
6. Electrically disconnect the 4 fuel injectors.
7. Turn ignition switch ON, apply brake and start engine. The starter cuts in automatically after 5 seconds.
8. Measure the amount of fuel in each pipe.

Replace the fuel injector(s) whose leak return is greater than 10 cm.
Disconnect the four transparent fuel pipes and reconnect the fuel injector return circuit.
Disconnect the test IMV and reconnect the low pressure actuator to the pump.

TEST 11: FUEL FILTER CHECK

1. CEHCK FUEL FILTER

Check the conformity of the fuel filter.
Is the fuel filter correct?

Yes or No

Yes >> GO TO 2.
No >> Replace the fuel filter with an original part.

2. CHECK FUEL FILTER

Turn ignition switch OFF, analyses the fuel in the fuel filter.

- Disconnect the fuel supply and return hoses from the fuel filter.
- Block the fuel filter inlets and outlets straight away with appropriate plugs.
- Remove the fuel filter from its holder and shake it well, keeping the caps in place and empty the contents of the fuel filter into a glass container by lifting up a protective cap and undoing the bleed screw.

Can you see at the bottom of the container a deposit of black particles?

Yes or No

Yes >> GO TO 3.
No >> Fuel filter correct.

3. CHECK METAL PARTICLES

Pass a magnet beneath the container to collect only all the metal particles. Take the magnet away from the container.

Do the particles collected using the magnet cover a surface area greater than 1 cm^2 ?

Yes or No

Yes >> Replace the entire injection system.
No >> Fuel filter correct.

Engine Control Component Parts Location

BBS0040T

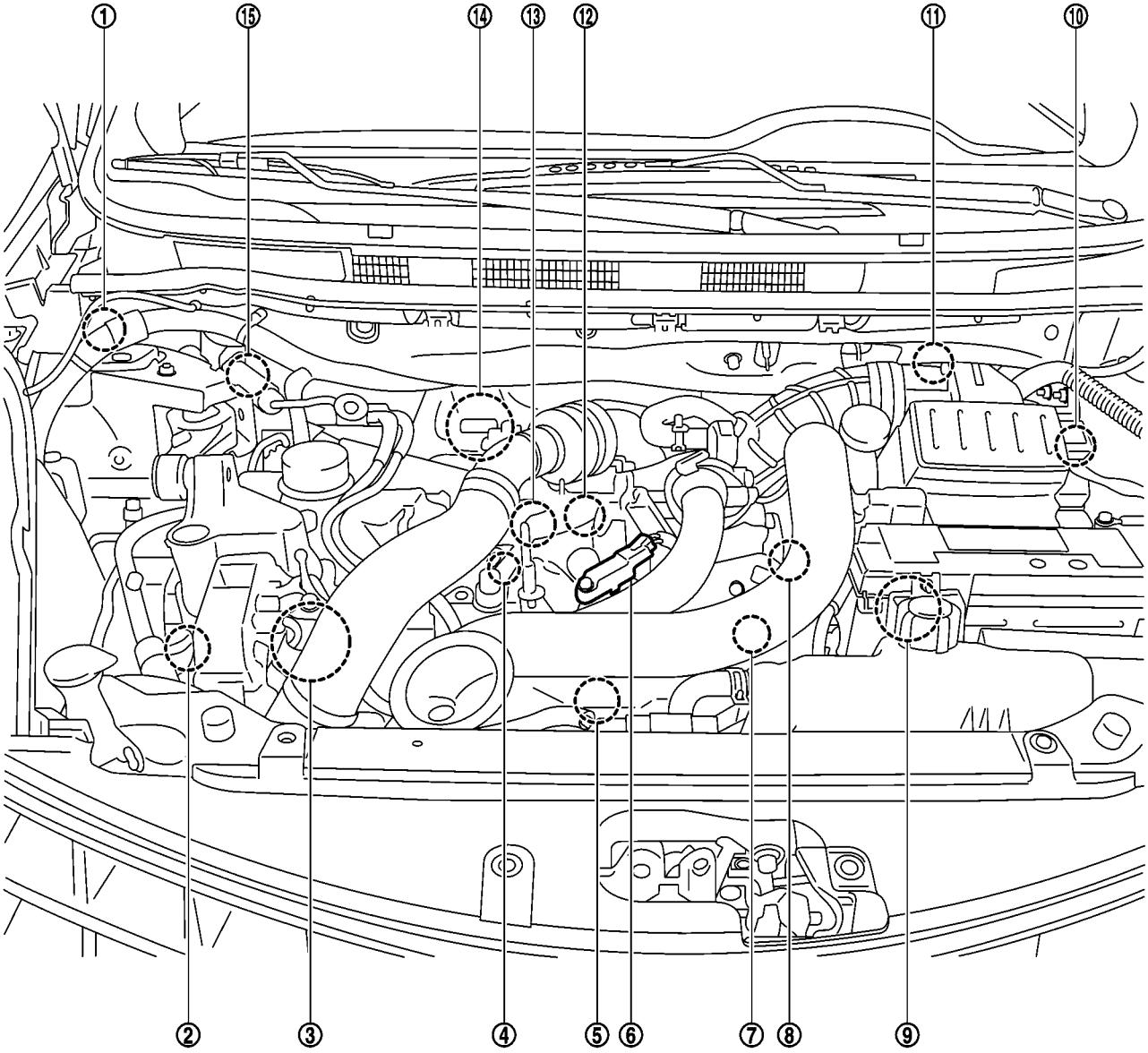

MBIB1516E

1. Fuel filter (LHD models)
2. Camshaft position sensor
3. Fuel pump
4. Knock sensor (Accelerometer)
5. Turbocharger boost control solenoid valve
6. Turbocharger boost sensor (63kw engine models only)
7. Crankshaft position sensor
8. Engine coolant temperature sensor
9. Glow control unit
10. ECM
11. Mass air flow sensor
12. EGR volume control valve
13. Fuel injector
14. Fuel rail
15. Primimg pump

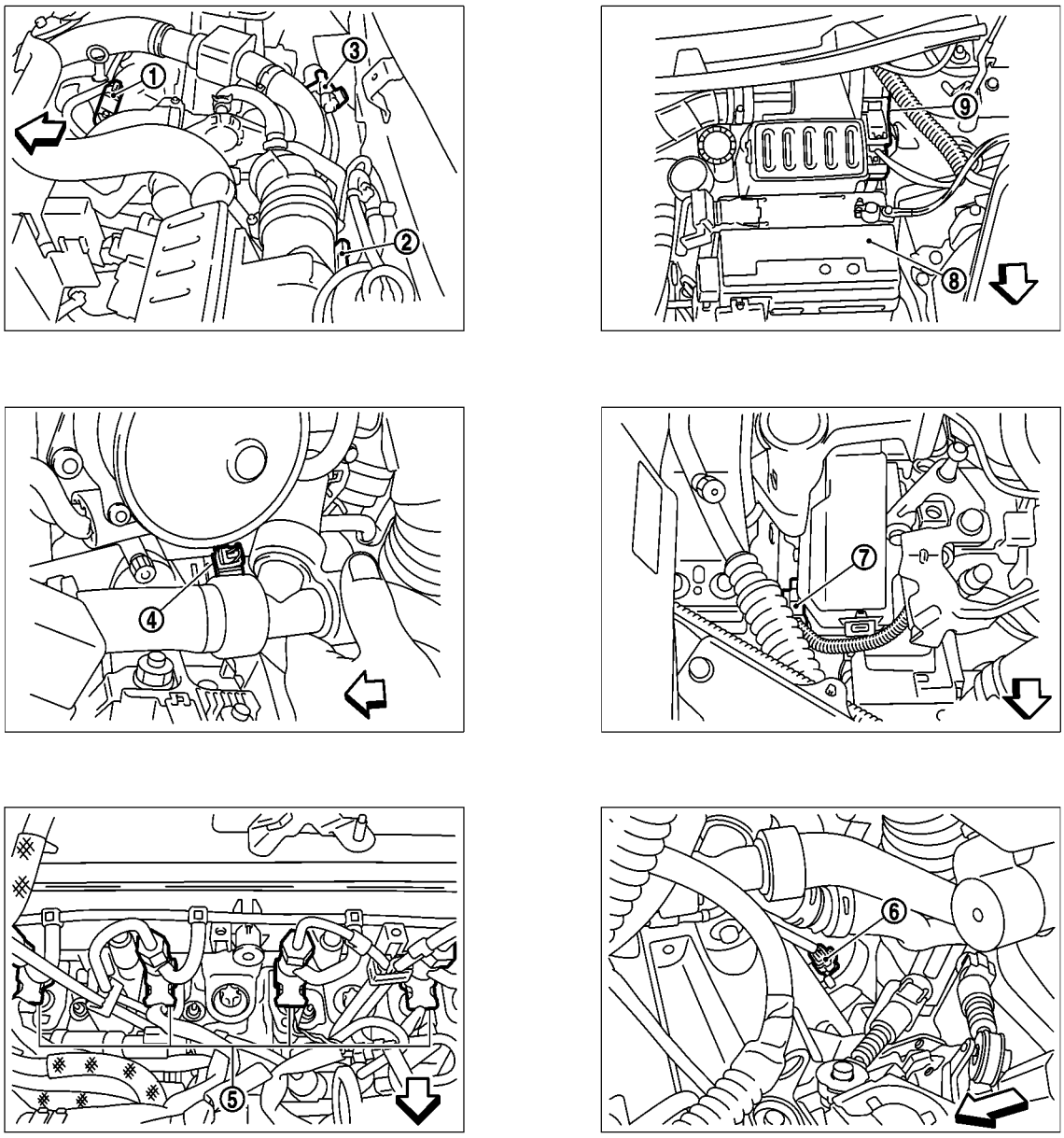

MBIB1537E

⇦ : Vehicle front

1. Turbocharger boost sensor (63kw engine models only)
2. Mass air flow sensor
3. EGR volume control valve
4. Engine coolant temperature sensor
5. Fuel injector
6. Crankshaft position sensor
7. Camshaft position sensor
8. Battery
9. ECM

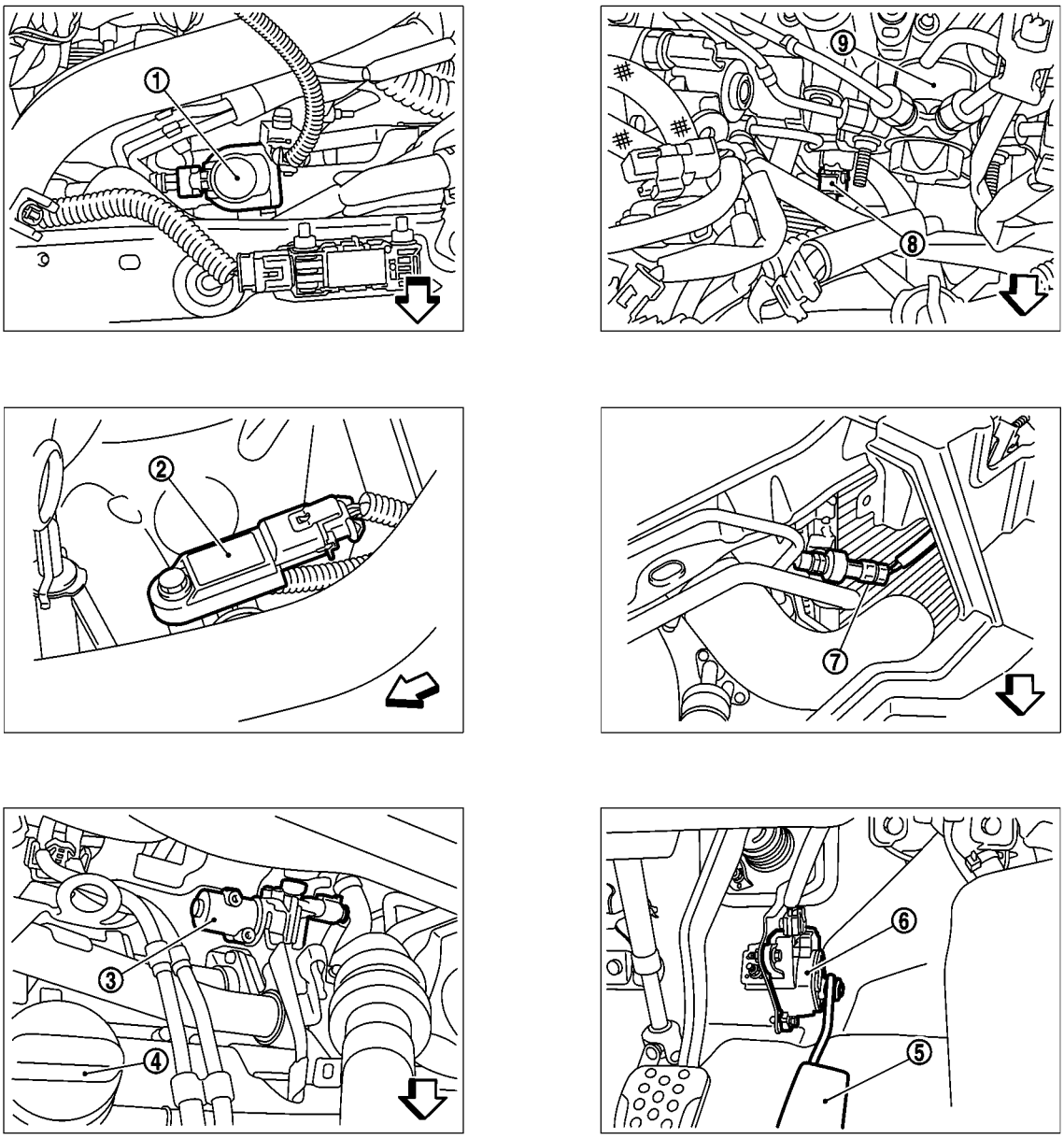

MBIB1538E

⇦ : Vehicle front

1. Turbocharger boost control solenoid valve (63kw engine models only)
2. Turbocharger boost sensor (63kw engine models only)
3. EGR volume control valve
4. Engine oil filler cap
5. Accelerator pedal
6. Accelerator pedal position sensor
7. Refrigerant pressure sensor
8. Knock sensor (Accelerometer)
9. Fuel rail

Wiring Diagram — ECM —

BBS0040U

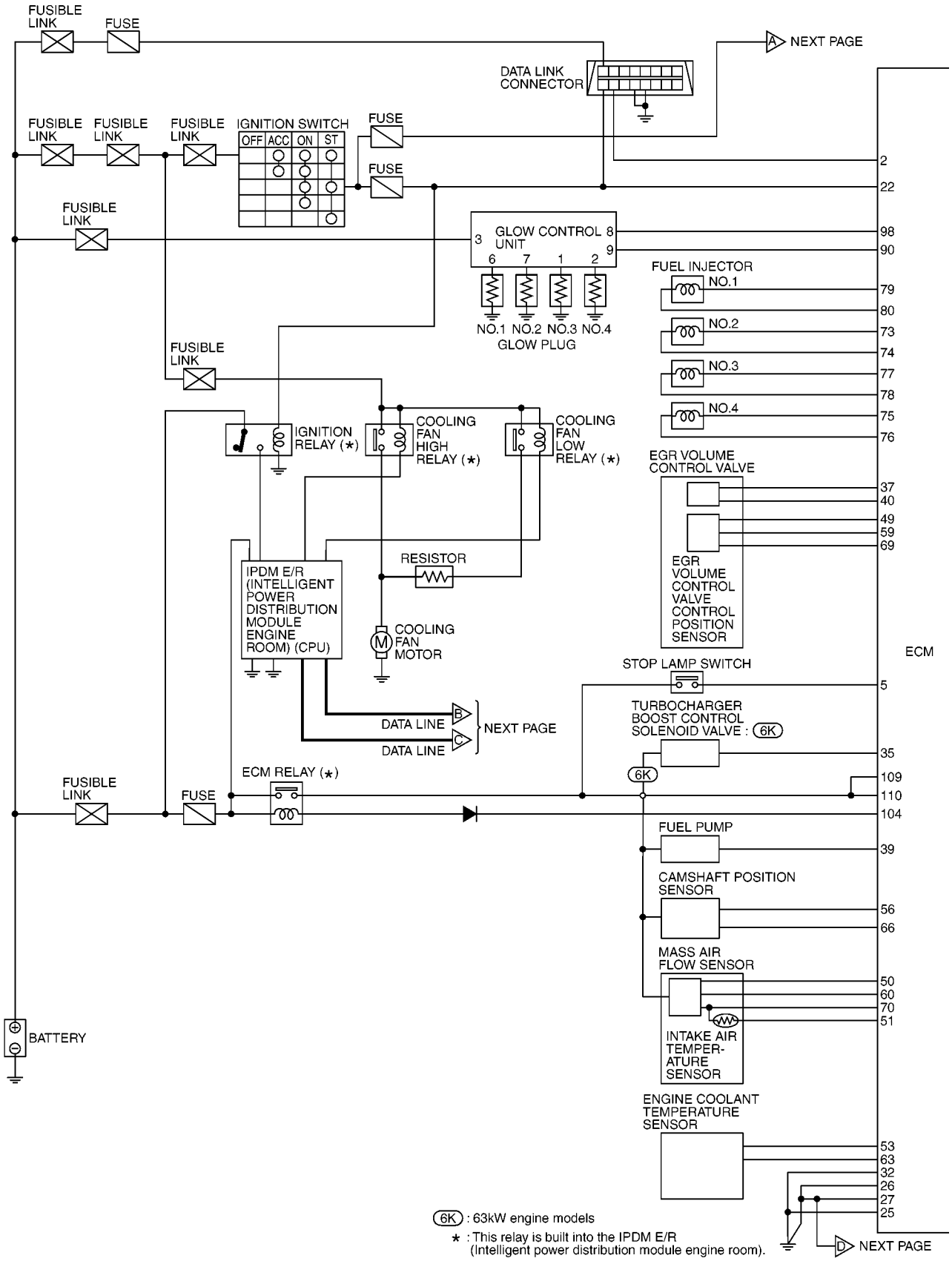

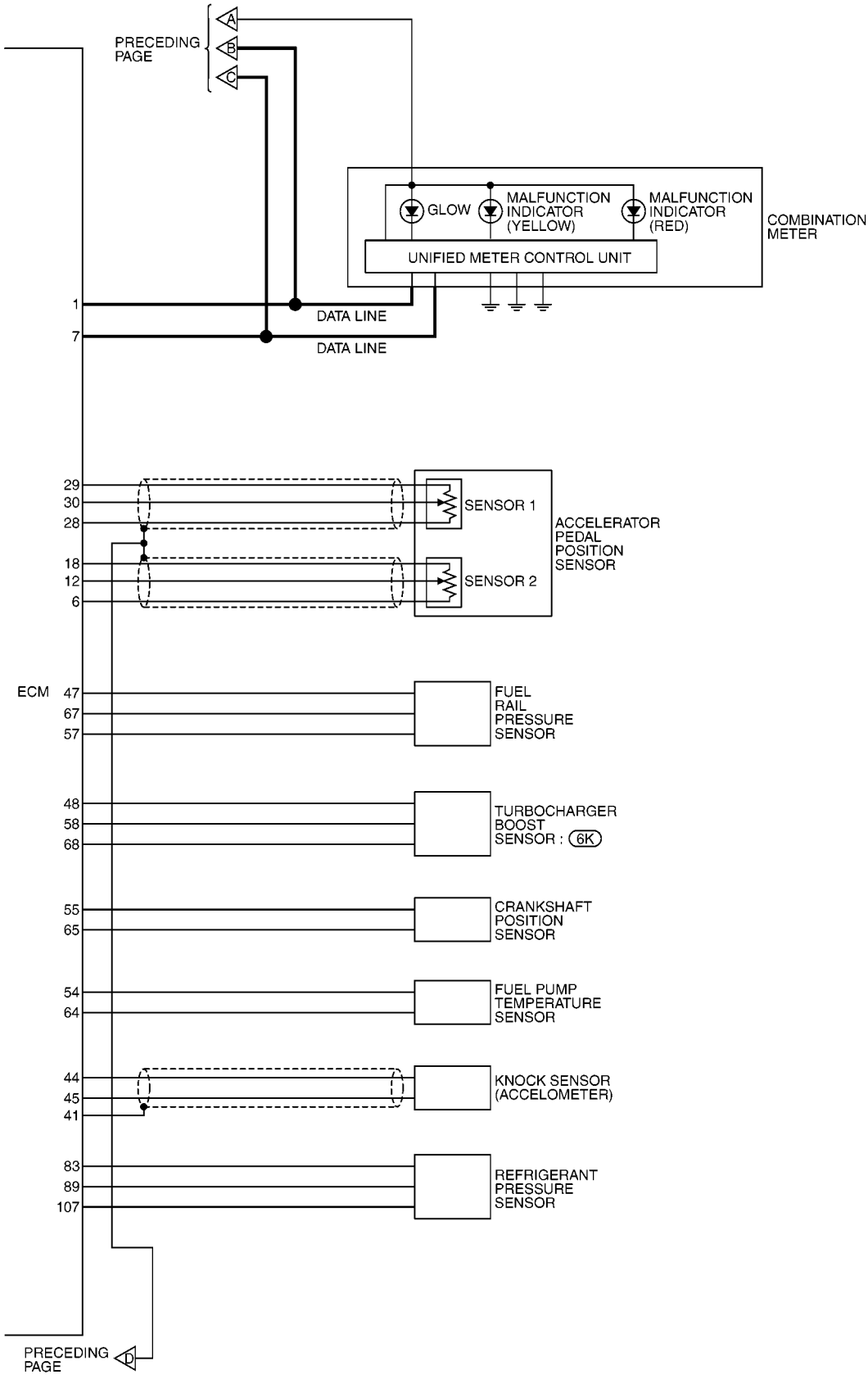

MBWA1570E

Refer to EC-21, "How to Check Vehicle Type" to confirm the engine type.

ECM Harness Connector Terminal Layout

BBS0040V

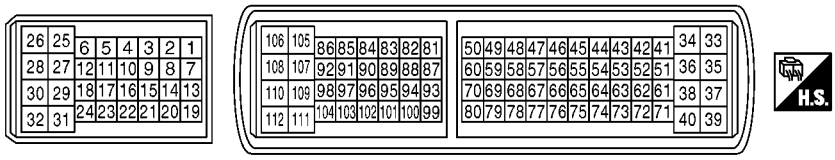

MBIB1485E

ECM Terminals And Reference Value

BBS0040W

PREPARATION

1. ECM (1) is located in the engine room left side near battery (2).

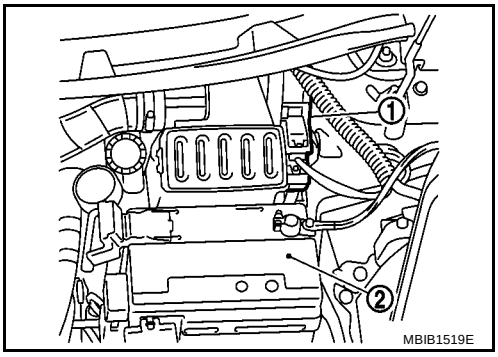

MBIB1519E

2. Disconnect ECM harness connectors.
   - When disconnecting ECM harness connectors, loosen (B) it with levers (1) as far as they will go as shown in the figure.
   - ECM (2)
   - Fasten (A)
3. Connect a break-out box (SST) and Y-cable adapter (SST) between the ECM and ECM harness connector.
   - Use extreme care not to touch 2 pins at one time.
   - Data is for comparison and may not be exact.

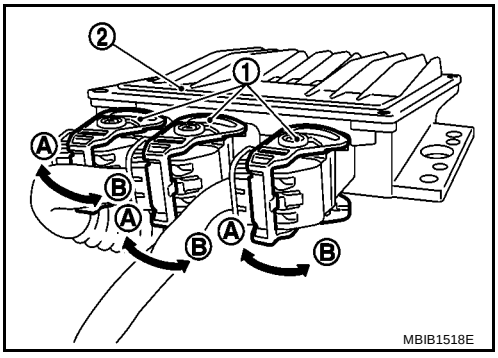

MBIB1518E

ECM INSPECTION TABLE

Remarks: Specification data are reference values and are measured between each terminal and ground.
Pulse signal is measured by CONSULT-II.

CAUTION:
Do not use ECM ground terminals when measuring input/output voltage. Doing so may result in damage to the ECM's transistor. Use a ground other than ECM terminals, such as the ground.

TERMINAL NO.	WIRE COLOR	ITEM	CONDITION	DATA (DC Voltage and Pulse Signal)
1	L	CAN communication line	**[Ignition switch ON]**	Approximately 2.6V Output voltage varies with the communication status.
2	LG	Data link connector	**[Ignition switch ON]** ● CONSULT-II is disconnected.	Approximately 2.6V
5	R	Stop lamp switch	**[Ignition switch OFF]** ● Brake pedal: Fully released	Approximately 0V
			[Ignition switch OFF] ● Brake pedal: Slightly depressed	BATTERY VOLTAGE (11 - 14V)
6	L/R	Sensor ground (Accelerator pedal position sensor 2)	**[Engine is running]** ● **Warm-up condition** ● Idle speed	Approximately 0.3V
7	Y	CAN communication line	**[Ignition switch ON]**	Approximately 2.4V Output voltage varies with the communication status.
12	L/W	Accelerator pedal position sensor 2	**[Ignition switch ON]** ● Engine stopped ● Accelerator pedal: Fully released	Approximately 0.4V
			[Ignition switch ON] ● Engine stopped ● Accelerator pedal: Fully depressed	Approximately 2.0V
18	L	Sensor power supply (Accelerator pedal position sensor 2)	**[Ignition switch ON]**	Approximately 4.6V
22	O	Ignition switch	**[Ignition switch ON]**	BATTERY VOLTAGE (11 - 14V)
25 26 27	B B B	ECM ground	**[Engine is running]** ● **Warm-up condition** ● Idle speed	Approximately 0V
28	B	Sensor ground (Accelerator pedal position sensor 1)	**[Engine is running]** ● **Warm-up condition** ● Idle speed	Approximately 0.24V
29	R	Sensor power supply (Accelerator pedal position sensor 1)	**[Ignition switch ON]**	Approximately 5.0V
30	W	Accelerator pedal position sensor 1	**[Ignition switch ON]** ● Engine stopped ● Accelerator pedal: Fully released	Approximately 0.76V
			[Ignition switch ON] ● Engine stopped ● Accelerator pedal: Fully depressed	Approximately 4.2V

TERMINAL NO.	WIRE COLOR	ITEM	CONDITION	DATA (DC Voltage and Pulse Signal)
32	B	ECM ground	**[Engine is running]** ● **Warm-up condition** ● Idle speed	Approximately 0V
35	R	Turbocharger boost control solenoid valve	**[Ignition switch ON]** ● **Warm-up condition** ● Idle speed	0 - 12.5V ★ 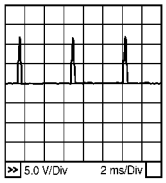 MBIB1504E
			[Ignition switch ON] ● **Warm-up condition** ● Engine speed: 2,000 rpm	0 - 12.5V ★ 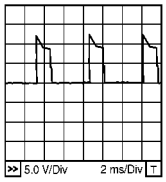 MBIB1505E
37	B	EGR volume control valve	**[Engine is running]** ● **Warm-up condition** ● Idle speed	Approximately 1.1V
			[Engine is running] ● **Warm-up condition** ● Engine speed: 2,000 rpm	Approximately 0.78V
39	P	Fuel pump	**[Engine is running]** ● **Warm-up condition** ● Idle speed	0 - 12.5V ★ 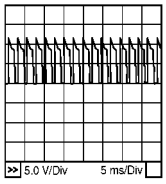 MBIB1506E
			[Engine is running] ● **Warm-up condition** ● Engine speed: 2,000 rpm	0 - 12.5V ★ 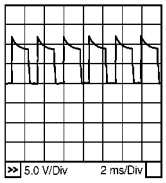 MBIB1507E
40	W	EGR volume control valve	**[Engine is running]** ● **Warm-up condition** ● Idle speed	Approximately 0.7 - 1.9
			[Engine is running] ● **Warm-up condition** ● Engine speed: 2,000 rpm	Approximately 1.5 - 1.9V
41	—	Sensor ground (Knock sensor shield circuit)	**[Engine is running]** ● Idle speed	Approximately 0.2V
44	W	Knock sensor	**[Engine is running]** ● Idle speed	Approximately 0.3V

TERMINAL NO.	WIRE COLOR	ITEM	CONDITION	DATA (DC Voltage and Pulse Signal)
45	O	Sensor ground (Knock sensor)	**[Engine is running]**	Approximately 0.3V
47	L	Sensor power supply (Fuel rail pressure sensor)	**[Ignition switch ON]**	Approximately 5.0V
48	V	Sensor power supply (Turbocharger boost sensor)	**[Ignition switch ON]**	Approximately 5.0V
49	SB	Sensor power supply (EGR volume control valve control position sensor)	**[Ignition switch ON]**	Approximately 5.0V
50	L	Sensor power supply (Mass air flow sensor)	**[Ignition switch ON]**	Approximately 5.0V
51	R	Intake air temperature sensor	**[Engine is running]** ● **Warm-up condition**	Approximately 0.3 - 5.0V Output voltage varies with intake air temperature
53	P	Engine coolant temperature sensor	**[Engine is running]** ● **Warm-up condition**	Approximately 0.3 - 5.0V Output voltage varies with engine coolant temperature
54	P	Fuel pump temperature sensor	**[Engine is running]** ● **Warm-up condition**	Approximately 0.3 - 5.0V Output voltage varies with fuel pump temperature
55	R	Crankshaft position sensor	**[Engine is running]** ● **Warm-up condition** ● Idle speed **NOTE:** The pulse cycle changes depending on rpm at idle.	0 - 12.5V ★ 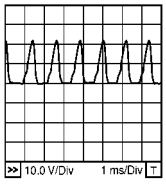 MBIB1508E
			[Engine is running] ● **Warm-up condition** ● Engine speed: 2,000 rpm	0 - 12.5V ★ 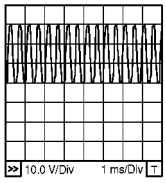 MBIB1509E
56	Y	Camshaft position sensor	**[Engine is running]** ● **Warm-up condition** ● Idle speed **NOTE:** The pulse cycle changes depending on rpm at idle.	0 - 1V ★ 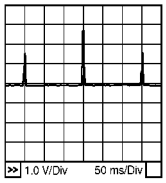 MBIB1510E
			[Engine is running] ● **Warm-up condition** ● Engine speed: 2,000 rpm	0 - 1V ★ 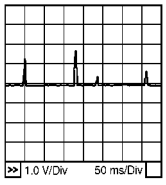 MBIB1511E

TERMINAL NO.	WIRE COLOR	ITEM	CONDITION	DATA (DC Voltage and Pulse Signal)
57	R	Fuel rail pressure sensor	**[Engine is running]** ● **Warm-up condition** ● Idle speed	Approximately 1.0V
			[Engine is running] ● **Warm-up condition** ● Engine speed: 2,000 rpm	Approximately 1.5V
58	O	Turbocharger boost sensor	**[Engine is running]** ● **Warm-up condition** ● Idle speed	Approximately 1.6V
			[Engine is running] ● **Warm-up condition** ● Engine speed: 2,000 rpm	Approximately 2.0V
59	L	EGR volume control valve control position sensor	**[Engine is running]** ● **Warm-up condition** ● Idle speed	Approximately 4.1V
			[Engine is running] ● **Warm-up condition** ● Engine speed: 2,000 rpm	Approximately 3.3V
60	Y	Mass air flow sensor	**[Ignition switch: ON]**	Approximately 0.36V
			[Engine is running] ● **Warm-up condition** ● Idle speed	Approximately 1.7V
			[Engine is running] ● **Warm-up condition** ● Engine speed: 2,500 rpm	Approximately 2.2V
63	B	Sensor ground (Engine coolant temperature sensor)	**[Engine is running]** ● **Warm-up condition** ● Idle speed	Approximately 0.25V
64	G	Sensor ground (Fuel pump temperature sensor)	**[Engine is running]** ● **Warm-up condition** ● Idle speed	Approximately 0.3V
65	B	Sensor ground (Crankshaft position sensor)	**[Engine is running]** ● **Warm-up condition** ● Idle speed	Approximately 0.3V
66	L	Sensor ground (Camshaft position sensor)	**[Engine is running]** ● **Warm-up condition** ● Idle speed	Approximately 0.3V
67	B	Sensor ground (Fuel rail pressure sensor)	**[Engine is running]** ● **Warm-up condition** ● Idle speed	Approximately 0.45V
68	G	Sensor ground (Turbocharger boost sensor)	**[Engine is running]** ● **Warm-up condition** ● Idle speed	Approximately 0.3V
69	P	Sensor ground (EGR volume control valve control position sensor)	**[Engine is running]** ● **Warm-up condition** ● Idle speed	Approximately 0.5V

TERMI-NAL NO.	WIRE COLOR	ITEM	CONDITION	DATA (DC Voltage and Pulse Signal)
70	G	Sensor ground (Mass air flow sensor/ Intake air temperature sensor)	**[Engine is running]** ● **Warm-up condition** ● Idle speed	Approximately 0.5V
73 75 77 79	B/P P/L G L	Fuel injector No. 2 Fuel injector No. 4 Fuel injector No. 3 Fuel injector No. 1	**[Engine is running]** ● **Warm-up condition** ● Idle speed **NOTE:** The pulse cycle changes depending on rpm at idle.	0 - 9V ★ 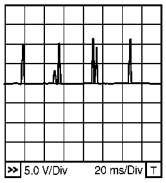 MBIB1512E
			[Engine is running] ● **Warm-up condition** ● Engine speed: 2,000 rpm	0 - 9V ★ 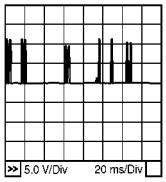 MBIB1513E
74 76 78 80	O V R P	Fuel injector power supply No. 2 Fuel injector power supply No. 4 Fuel injector power supply No. 3 Fuel injector power supply No. 1	**[Engine is running]** ● **Warm-up condition** ● Idle speed **NOTE:** The pulse cycle changes depending on rpm at idle.	5 - 10V ★ 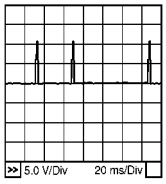 MBIB1514E
			[Engine is running] ● **Warm-up condition** ● Engine speed: 2,000 rpm	5 - 10V ★ 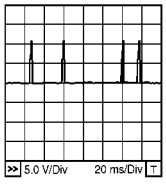 MBIB1515E
83	W	Sensor power supply (Refrigerant pressure sensor)	**[Ignition switch ON]**	Approximately 5.0V
89	BR	Refrigerant pressure sensor	**[Engine is running]** ● **Warm-up condition** ● Both A/C switch and blower fan switch: ON (Compressor operates)	Approximately 2.3V
104	P	ECM relay (self-shutoff)	**[Ignition switch ON]** **[Ignition switch OFF]** ● For a few seconds after turning ignition switch OFF	Approximately 1.4V
			[Ignition switch OFF] ● More than a few seconds after turning ignition switch OFF	BATTERY VOLTAGE (11 - 14V)

TERMI-NAL NO.	WIRE COLOR	ITEM	CONDITION	DATA (DC Voltage and Pulse Signal)
107	Y	Sensor ground (Refrigerant pressure sensor)	**[Engine is running]** ● **Warm-up condition** ● Idle speed	Approximately 0.3V
109 110	G G	Power supply for ECM	**[Ignition switch ON]**	BATTERY VOLTAGE (11 - 14V)

★: Average voltage for pulse signal (Actual pulse signal can be confirmed by oscilloscope.)

Conformity Check

BBS004TH

ECM STATUS AND PARAMETERS

Test Condition: Engine Stopped and Ignition Switch ON

Order	Function	Parameter or status check or action		Display and notes	Trouble diagnosis
1	Battery voltage	PR074:	BATTERY VOL	12 V < BATTERY VOL < 14.4 V	In the event of a malfunction, perform the trouble diagnosis for CHARGING SYSTEM.
2	Engine speed	PR055:	ENGINE SPEED	Indicates the engine's rotational speed in rpm.	In the event of a malfunction, perform the trouble diagnosis for DTC P0335 CKP SENSOR.
3	Accelerator pedal position	PR030:	ACCEL/PDL POS 0%	Indicates the position of the accelerator pedal as a%. ACCEL/PDL POS = 0%	In the event of a malfunction, perform the trouble diagnosis for APP SENSOR (DTC P0225, P0651 and P2120) and DTC P0641 SENSOR POWER SUPPLY.
4	Enginr coolant temperature	PR064:	WATER TEMP Warm: 90°C	Indicates the engine coolant temperature in °C. Default value: 80°C	In the event of a malfunction, perform the trouble diagnosis for DTC P0115 ETC SENSOR.
5	Fuel tank temperature	PR063:	FUEL TEMP Cold = WATER TEMP Warm: 50C	Indicates the fuel tank temperature in °C. This value is given by the fuel tank temperature sensor. Default value: 30°C.	In the event of a malfunction, perform the trouble diagnosis for DTC P0180 FTT SENSOR.
6	Intake air pressure	PR035:	ATOMOS PRESS	Indicates the ambient barometric pressure in mbar. The sensor is incorporated in the ECM.	If not consistent, check ATOMOS PRESS, INLET PRESS (in DATA MONITOR mode) and local ambient barometric pressure, with the engine stopped and ignition switch ON.
		PR032:	INLET PRESS	Indicates the pressure in the turbocharger in mbar.	
7	Fuel rail pressure	PR038:	RAIL PRESSURE Warm or cold - 90 bar < RAIL PRESSURE > 90 bar	Indicates the fuel rail pressure in Bar. This pressure is supplied by the fuel rail pressure sensor. Default value: 2000 Bar.	In the event of a malfunction, perform the trouble diagnosis for DTC P0190 FRP SENSOR.
8	Engine	ET038:	MOTOR Engine + after ignition feed	Indicates the current status of the engine. ● + after ignition feed ● CRANKING ● RUNNING ● MAINTAINED SUPPLY: Supply maintained during the power latch phase. ● Stalled: When the engine has stalled. ● PROTECTED: When a level 2 malfunction appears or when the engine speed is limited to a certain engine speed.	NONE.

Order	Function	Parameter or status check or action		Display and notes	Trouble diagnosis
9	Immobilizer	ET003:	ENG IMMOBILIZ INACTIVE	Indicates the status of the immobilizer system. ● INACTIVE: The ECM has recognized the immobilizer code transmitted by the Intelligent Key unit or BCM. ● ACTIVE: The ECM does not recognize the immobilizer code transmitted by the Intelligent Key unit or BCM.	If ACTIVE, perform the trouble diagnosis for NATS.
10	Code programmed	ET006:	CODE PROGRAM YES	States whether the immobilizer code has been programmed by the ECM or not. ● YES: Code programmed ● NO: Code not programmed by the ECM.	If NO, replace ECM.
11	Vehicle speed	PR089:	VEHICLE SPEED	Indicates the vehicle speed in kph. This parameter is transmitted by the “ABS actuator and electric unit (control unit)” or combination meter via CAN communication line.	Perform the trouble diagnosis for CAN communication line. Perform the trouble diagnosis for “ABS actuator and electric unit (control unit)” or combination meter.

Test Condition: Engine at Idle

Order	Function	Parameter or status check or action		Display and notes	Trouble diagnosis
1	Battery voltage	PR074:	BATTERY VOL	12V < BATTERY VOL < 14.4V	In the event of a malfunction, perform the trouble diagnosis for CHARGING SYSTEM.
2	Engine speed	PR055:	ENGINE SPEED Cold: 900 rpm Warm: 805 rpm	Indicates the engine's rotational speed in rpm.	In the event of a malfunction, perform the trouble diagnosis for DTC P0335 CKP SENSOR.
3	Accelerator pedal position	PR030:	ACCEL/PDL POS 0%	Indicates the position of the accelerator pedal as a%. ACCEL/PDL POS = 0%	In the event of a malfunction, perform the trouble diagnosis for APP SENSOR (DTC P0225, P0651 and P2120) and DTC P0641 SENSOR POWER SUPPLY.
4	Engine coolant temperature	PR064:	WATER TEMP Warm: 90°C	Indicates the engine coolant temperature in °C. Default value: 80°C.	In the event of a malfunction, perform the trouble diagnosis for DTC P0115 ETC SENSOR.
5	External air temperature	PR061:	EXT AIR TEMP	Indicates the ambient air temperature in °C. This information is provided by BCM via CAN communication line.	In the event of a malfunction, perform the trouble diagnosis for DTC P0100 MAF SENSOR.
6	Inlet air temperature	PR059:	INLET AIR TEMP Cold = EXT AIR TEMP Warm: 30°C	Indicates the intake air temperature in °C. This information is provided by the IAT sensor. Default value: 20°C.	In the event of a malfunction, perform the trouble diagnosis for DTC P0070 IAT SENSOR.
7	Fuel tank temperature	PR063:	FUEL TEMP Cold = WATER TEMP Warm: 50°C	Indicates the fuel tank temperature in °C. This value is given by the fuel tank temperature sensor. Default value: 30°C.	In the event of a malfunction, perform the trouble diagnosis for DTC P0180 FTT SENSOR.

Order	Function	Parameter or status check or action	Display and notes	Trouble diagnosis
8	Intake air pressure	PR035: ATOMOS PRESS	Indicates the ambient barometric pressure in mbar. The sensor is incorporated in the ECM. 600 mbar < Cold < 1050 mbar 600 mbar < Warm < 1050 mbar	If not consistent, check ATOMOS PRESS, INLET PRESS (in DATA MONITOR mode) and local ambient barometric pressure, with the engine stopped and ignition switch ON.
		PR032: INLET PRESS	Indicates the pressure in the turbocharger in mbar. INLET PRESS = local ambient barometric pressure	
9	Fuel rail pressure	PR038: RAIL PRESSURE Cold: 260 Bar Warm: 230 Bar	Indicates the fuel rail pressure in Bar. This pressure is supplied by the fuel rail pressure sensor. Default value: 2000 Bar.	In the event of a malfunction, perform the trouble diagnosis for DTC P0190 FRP SENSOR.

START SUBFUNCTION
Test Condition: Engine Stopped and Ignition Switch ON

Order	Function	Parameter or status check or action	Display and notes	Trouble diagnosis
1	ECM + after ignition feed	ET001: C/U+AFTR IGN PRESENT	Indicates that the ECM is supplied with a + after ignition feed. ● Present ● Absent	In the event of a malfunction, perform the trouble diagnosis for DTC P0560 BATTERY VOLTAGE or P0685 ECM RELAY.
2	Starting	ET076: STARTING AUTHORISED	Indicates whether or not starting has been authorized by the ECM. AUTHORISED: The ECM has given starting authorisation. PROHIBITED: The ECM has not given starting authorisation.	If PROHIBITED perform the trouble diagnosis for preheating system.
3	Engine	ET038: MOTOR Engine + after ignition feed	Indicates the current status of the engine. ● + after ignition feed ● CRANKING ● RUNNING ● MAINTAINEDSUPPLY: Supply maintained during the power latch phase. ● Stalled: When the engine has stalled. ● Protected: When a malfunction appears or when the engine speed is limited to a certain engine speed.	NONE.
4	Battery voltage	PR074: BATTERY VOL	12V < BATTERY VOL < 13.5V	In the event of a malfunction, perform the trouble diagnosis for CHARGING SYSTEM.

Test Condition: Engine at Idle

Order	Function	Parameter or status check or action		Display and notes	Trouble diagnosis
1	Computer + after ignition feed	ET001:	C/U+ AFTR IGN PRESENT	Indicates that the ECM is supplied with a + after ignition feed. ● Present ● Absent	In the event of a malfunction, perform the trouble diagnosis for DTC P0560 BATTERY VOLTAGE or P0685 ECM RELAY.
2	Starting	ET076:	STARTING AUTHORISED	Indicates whether or not starting has been authorized by the ECM. AUTHORISED: The ECM has given starting authorisation. PROHIBITED: The ECM has not given starting authorisation.	If PROHIBITED perform the trouble diagnosis for preheating system.
3	Engine	ET038:	MOTOR Engine + after ignition feed	Indicates the current status of the engine. ● + after ignition feed ● CRANKING ● RUNNING ● MAINTAINED SUPPLY: Supply maintained during the power latch phase. ● Stalled: When the engine has stalled. ● Protected: When a malfunction appears or when the engine speed is limited to a certain engine speed.	NONE.
4	Battery voltage	PR074:	BATTERY VOL	13V < BATTERY VOL < 14V	In the event of a malfunction, perform the trouble diagnosis for CHARGING SYSTEM.

PROTECTION SUBFUNCTION

Test Condition: Engine Stopped and Ignition Switch ON

Order	Function	Parameter or status check or action		Display and notes	Trouble diagnosis
1	Immobilizer	ET003:	ENG IMMOBILIZ INACTIVE	Indicates the status of the immobilizer system. ● INACTIVE: The ECM has recognized the immobilizer code transmitted by the Intelligent Key unit or BCM. ● ACTIVE: The ECM does not recognize the immobilizer code transmitted by the Intelligent Key unit or BCM.	If ACTIVE, perform the trouble diagnosis for NATS.
2	Code programmed	ET006:	CODE PROGRAM YES	States whether the immobilizer code has been programmed by the ECM or not. ● YES: Code programmed ● NO: Code not programmed by the ECM.	If NO, replace ECM.
3	Battery voltage	PR074:	BATTERY VOL	12V < BATTERY VOL < 13.5V	In the event of a malfunction, perform the trouble diagnosis for CHARGING SYSTEM.

Test Condition: Engine at Idle

Order	Function	Parameter or status check or action		Display and notes	Trouble diagnosis
1	Immobilizer	ET003:	ENG IMMOBLIZ INACTIVE	Indicates the status of the immobilizer system. ● INACTIVE: The ECM has recognized the immobilizer code transmitted by the Intelligent Key unit or BCM. ● ACTIVE: The ECM does not recognize the immobilizer code transmitted by the Intelligent Key unit or BCM.	If ACTIVE, perform the trouble diagnosis for NATS.
2	Code programmed	ET006:	CODE PROGRAM YES	States whether the immobilizer code has been programmed by the computer or not. ● YES: Code programmed ● NO: Code not programmed by the ECM.	If NO, replace ECM.
3	Battery voltage	PR074:	BATTERY VOL	13V < BATTERY VOL < 14V	In the event of a malfunction, perform the trouble diagnosis for CHARGING SYSTEM.

SUB SYSTEM COLD LOOP

Test Condition: Engine Stopped and Ignition Switch ON

Order	Function	Parameter or status check or action		Display and notes	Trouble diagnosis
1	Air conditioning present	ET079:	PRSNC CLMTSTN YES	States whether the vehicle is fitted with air conditioning or not. ● YES: Air conditioning is detected by the ECM. ● NO: Air conditioning is not detected by the ECM.	If not consistent with the vehicle equipment, perform the trouble diagnosis for CAN communication line.
2	Compressor engagement request	ET088:	DMND LNK COMP INACTIVE	The ECM requests the IPDM E/R (via CAN communication) to start the compressor ● ACTIVE: The CAN communication should not be suspected on the Automatic Transmission, IPDM E/R or Intelligent Key unit or BCM system. The Intelligent Key unit or BCM should request the ECM to be engaged. The refrigerant pressure sensor should not be suspected. Satisfactory engine operating conditions (engine coolant temperature, engine load etc.). ● INACTIVE: One of the above conditions has not been fulfilled.	NONE.

Order	Function	Parameter or status check or action		Display and notes	Trouble diagnosis
3	Air conditioning authorization	ET004:	A/C AUTHOR YES	Non operational information, designed solely for trouble diagnosis purposes. ● YES: Satisfactory engine operating conditions (engine coolant temperature, engine load etc.). The vehicle is not in a specific movement phase (hill start or stop etc.). ● NO: One of the above conditions has not been fulfilled.	NONE.
4	Refrigerant pressure	PR037:	RFRGERNT PRES	Indicates the value in Bar for the refrigerant fluid in the system. 2 Bar < RFRGERNT PRES < 27 Bar Default value: 0 Bar	In the event of a malfunction, perform the trouble diagnosis for DTC P0530 REFRIGERANT PRESSURE SENSOR.
5	Engine speed	PR055:	ENGINE SPEED	Indicates the engine's rotational speed in rpm.	In the event of a malfunction, perform the trouble diagnosis for dtc P0335 CKP SENSOR.
6	Fast idle speed request	ET023:	ACCEL IDL RQ ABSENT	The Intelligent Key unit or BCM requests fast idle speed to the ECM. ● ABSENT: The Intelligent Key unit or BCM did not make the request ● PRESENT: The Intelligent Key unit or BCM has made a request	In the event of a malfunction, perform the trouble diagnosis for CAN communication line. Perform the trouble diagnosis for the Intelligent Key unit or BCM.
7	Engine coolant temperature	PR064:	WATER TEMP Warm: 90°C	Indicates the engine coolant temperature in °C. Default value: 80°C.	In the event of a malfunction, perform the trouble diagnosis for DTC P0115 ETC SENSOR.
8	Vehicle speed	PR089:	VEHICLE SPEED	Indicates the vehicle speed in kph. This parameter is transmitted by the “ABS actuator and electric unit (control unit)” or combination meter via CAN communication line.	Perform the trouble diagnosis for CAN communication line. Perform the trouble diagnosis for “ABS actuator and electric unit (control unit)” or combination meter.
9	Power used by the AC compressor	PR125:	PWR ABSOB A/C 0 WATT	Indicates the power used by the compressor	NONE.

Order	Function	Parameter or status check or action		Display and notes	Trouble diagnosis
10	Fan speed request*	ET022:	FAN UNIT LOW INACTIVE	The ECM requests the IPDM E/R to start the fan. ● INACTIVE: Engine speed = 0 rpm. ● ACTIVE: Engine speed = idle speed, correct refrigerant pressure and vehicle speed = 0 km/h or high engine coolant temperature.	NONE.
11	Fan speed request*	ET021:	FAN UNIT HIGH INACTIVE	The ECM requests the IPDM E/R to start the fans. ● INACTIVE: Engine speed = 0 rpm. ● ACTIVE: Engine speed = idle speed. Refrigerant pressure > 15 Bar, vehicle speed = 0 km/h or high coolant temperature.	NONE.

*: When climate control is requested with the engine at idle speed and vehicle speed = 0 km/h, FAN UNIT LOW will always be “ACTIVE” and FAN UNIT HIGH “INACTIVE” (except refrigerant pressure> 15 bar, vehicle speed = 0 km/h and high engine coolant temperature). The fan is prevented from operating under certain engine coolant temperature conditions when driving.

Test Condition: Engine at Idle

Order	Function	Parameter or status check or action		Display and notes	Trouble diagnosis
1	Air conditioning present	ET079:	PRSNC CLMTSTN YES	States whether the vehicle is fitted with air conditioning or not. ● YES: Air conditioning is detected by the ECM. ● NO: Air conditioning is not detected by the ECM.	If not consistent with the vehicle equipment, perform the trouble diagnosis for CAN communication line.
2	Compressor engagement request	ET088:	DMND LNK COMP INACTIVE	The ECM requests the IPDM E/R (via CAN communication line) to start the compressor ● ACTIVE: The CAN communication should not be suspected on the Automatic Transmission, IPDM E/R or Intelligent Key unit or BCM system. The Intelligent Key unit or BCM should request the ECM to be engaged. The refrigerant pressure sensor should not be suspected. Satisfactory engine operating conditions (engine coolant temperature, engine load etc.). ● INACTIVE: One of the above conditions has not been fulfilled or no request has been made by the driver so A/C AUTHOR = NO.	NONE.

Order	Function	Parameter or status check or action		Display and notes	Trouble diagnosis
3	Air conditioning authorization	ET004:	A/C AUTHOR YES	Non operational information, designed solely for trouble diagnosis purposes. ● YES: Satisfactory engine operating conditions (engine coolant temperature, engine load etc.). The vehicle is not in a specific movement phase (hill start or stop etc.). ● INACTIVE: One of the above conditions has not be fulfilled or no request has been made by the driver so DMND LNK COMP = INACTIVE.	NONE.
4	Refrigerant pressure	PR037:	RFRGERNT PRES	Indicates the value in Bar for the refrigerant fluid in the system. 2 Bar < RFRGERNT PRES < 27 Bar Default value: 0 Bar.	In the event of a malfunction, perform the trouble diagnosis for DTC P0530 REFRUGERANT PRESSURE SENSOR.
5	Engine speed	PR055:	ENGINE SPEED Cold: 900 rpm Warm: 805 rpm	Indicates the engine's rotational speed in rpm.	In the event of a malfunction, perform the trouble diagnosis for DTC P0335 CKP SENSOR.
6	Fast idle speed request	ET023:	ACCEL IDL RQ ABSENT	The Intelligent Key unit or BCM requests fast idle speed from the ECM. ● ABSENT: The Intelligent Key unit or BCM did not make the request. ● PRESENT: The Intelligent Key unit or BCM has made the request.	In the event of a malfunction, perform the trouble diagnosis for CAN communication line. Perform the trouble diagnosis for the Intelligent Key unit or BCM.
7	Engine coolant temperature	PR064:	WATER TEMP Warm: 90°C	Indicates the engine coolant temperature in °C. Default value: 80°C.	In the event of a malfunction, perform the trouble diagnosis for DTC P0115 ECT SENSOR.
8	Vehicle speed	PR089:	VEHICLE SPEED	Indicates the vehicle speed in kph. This parameter is transmitted by the “ABS actuator and electric unit (control unit)” or combination meter via CAN communication line.	Perform the trouble diagnosis for CAN communication line. Perform the trouble diagnosis for “ABS actuator and electric unit (control unit)” or combination meter.
9	Power used by the AC compressor	PR125:	PWR ABSOB A/C 0 WATT	Indicates the power used by the compressor	NONE.

Order	Function	Parameter or status check or action	Display and notes	Trouble diagnosis
10	Fan speed request*	ET022: FAN UNIT LOW INACTIVE	The ECM requests the IPDM E/R to start the fan. ● INACTIVE: The request is not made by theECM because DMND LNK COMP = INACTIVE and A/C AUTHOR = NO. ● ACTIVE: The request is made by the ECM. DMND LNK COMP = ACTIVE and A/C AUTHOR = YES. (correct refrigerant pressure and vehicle speed = 0 km/h or high engine coolant temperature).	NONE.
		ET021: FAN UNIT HIGH INACTIVE	The ECM requests the IPDM E/R to start the fan. ● INACTIVE: The request is not made by the ECM because DMND LNK COMP = INACTIVE and A/C AUTHOR = NO. ● ACTIVE: The request is made by the ECM. DMND LNK COMP = ACTIVE and A/C AUTHOR = YES. Refrigerant pressure > 15 Bar, vehicle speed = 0 km/h or high engine coolant temperature.	

*: When climate control is requested with the engine at idle speed and vehicle speed = 0 km/h, FAN UNIT LOW will always be “ACTIVE” and FAN UNIT HIGH “INACTIVE” (except refrigerant pressure > 15 bar, vehicle speed = 0 km/ h and high engine coolant temperature). The fan is prevented from operating under certain engine coolant temperature conditions when driving.

HEATING SUBFUNCTION

Test Condition: Engine Stopped and Ignition Switch ON

Order	Function	Parameter or status check or action	Display and notes	Trouble diagnosis
1	Engine coolant temperature	PR064: WATER TEMP Warm: 90°C	Indicates the engine coolant temperature in °C. Default value: 80°C.	In the event of a malfunction, perform the trouble diagnosis for DTC P0115 ECT SENSOR.

Test Condition: Engine at Idle

Order	Function	Parameter or status check or action	Display and notes	Trouble diagnosis
1	Engine coolant temperature	PR064: WATER TEMP Warm: 90°C	Indicates the engine coolant temperature in °C. Default value: 80°C.	In the event of a malfunction, perform the trouble diagnosis for DTC P0115 ECT SENSOR.

FUEL CIRCUIT SUB FUNCTION

Test Condition: Engine Stopped and Ignition Switch ON

Order	Function	Parameter or status check or action		Display and notes	Trouble diagnosis
1	Fuel tank temperature	RP063:	FUEL TEMP Cold = WATER TEMP Warm: 50°C	Indicates the fuel tank temperature in °C. Default value: 30°C.	In the event of a malfunction, perform the trouble diagnosis for DTC P0180 FTT SENSOR.
2	Fuel flow	PR017:	FUEL FLOW 0.0 mg/piston stroke	Indicates the fuel flow injected in mg/piston stroke for each injector. FUEL FLOW = 0 mg/piston stroke	NONE.
3	Fuel rail pressure	PR038:	RAIL PRESSURE Cold and warm: - 90 bar < RAIL PRESSURE < 90 bar	Indicates the fuel rail pressure in Bar. This pressure is supplied by the fuel rail pressure sensor. Default value: 2000 Bar.	In the event of a malfunction, perform the trouble diagnosis for DTC P0190 FRP SENSOR.
4	Fuel rail pressure set point	PR008:	RAIL PRES SET 375 bar (Engine starting pressure instruction) Cold: 500 Bar Warm: 300 Bar	Indicates a theoretical pressure value for optimum engine operation. 300 bar < RAIL PRES SET < 500 bar.	NONE.
5	Fuel rail pressure sensor voltage	PR080:	RAIL PRES S V Cold: 0.5V Cold: 4.5V	Indicates the voltage delivered by the ECM on the fuel rail pressure sensor. 0.5V < RAIL PRES S V < 4.5V Default value: 4.5V	NONE.
6	Engine speed	PR055:	ENGINE SPEED	Indicates the engine's rotational speed in rpm.	In the event of a malfunction, perform the trouble diagnosis for DTC P0335 CKP SENSOR.

Test Condition: Engine at Idle

Order	Function	Parameter or status check or action		Display and notes	Trouble diagnosis
1	Fuel tank temperature	PR063:	FUEL TEMP Cold = WATER TEMP Warm: 50°C	Indicates the fuel tank temperature in °C. Default value: 30°C.	In the event of a malfunction, perform the trouble diagnosis for DTC P0180 FTT SENSOR.
2	Fuel flow	PR017:	FUEL FLOW 10 < Cold < 2 mg/piston stroke 4 < Warm < 6 mg/piston stroke	Indicates the fuel flow injected in mg/piston stroke for each injector.	NONE.
3	Fuel rail pressure	PR038:	RAIL PRESSURE Cold: 260 Bar Warm: 230 Bar	Indicates the fuel rail pressure in Bar. This pressure is supplied by the fuel rail pressure sensor. Default value: 2000 Bar.	In the event of a malfunction, perform the trouble diagnosis for DTC P0190 FRP SENSOR.
4	Fuel rail pressure set point	PR008:	RAIL PRES SET 375 bar. (Engine starting pressure specification). Cold: 260 Bar Warm: 230 Bar	Indicates a theoretical pressure value for optimum engine operation.	NONE.

Order	Function	Parameter or status check or action	Display and notes	Trouble diagnosis
5	Fuel rail pressure sensor voltage	PR080: RAIL PRES S V	Indicates the voltage delivered by the ECM on the fuel rail pressure sensor. 0.5 V (0 bar) < RAIL PRES S V < 4.5 V (1600 bar)	NONE.
6	Engine speed	PR055: ENGINE SPEED Cold: 900 rpm V Warm: 805 rpm	Indicates the engine's rotational speed in rpm.	In the event of a malfunction, perform the trouble diagnosis for DTC P0115 ECT SENSOR.

PRE-HEATING/IGNITION SUBFUNCTION

Test Condition: Engine Stopped and Ignition Switch ON

Order	Function	Parameter or status check or action	Display and notes	Trouble diagnosis
1	Engine coolant temperature	PR064: WATER TEMP Warm: 90°C	Indicates the engine coolant temperature in °C. Default value: 80°C.	In the event of a malfunction, perform the trouble diagnosis for DTC P0115 ETC SENSOR.
2	Intake air temperature	PR059: INLET AIR TEMP Cold = EXT AIR TEMP Warm: 30°C	Indicates the intake air temperature in °C. This information is provided by the IAT sensor. Default value: 30°C.	In the event of a malfunction, perform the trouble diagnosis for DTC P0070 IAT SENSOR.
3	Battery voltage	PR074: BATTERY VOL	12V < BATTERY VOL < 14.4V	In the event of a malfunction, perform the trouble diagnosis for CHARGING SYSTEM.

Test Condition: Engine at Idle

Order	Function	Parameter or status check or action	Display and notes	Trouble diagnosis
1	Engine coolant temperature	PR064: WATER TEMP Warm: 90°C	Indicates the engine coolant temperature in °C. Default value: 80°C.	In the event of a malfunction, perform the trouble diagnosis for DTC P0115 ETC SENSOR.
2	External air temperature	PR061: EXT AIR TEMP	Indicates the ambient air temperature in °C. This information is provided by BCM via CAN communication line.	In the event of a malfunction, perform the trouble diagnosis for DTC P0100 MAF SENSOR.
3	Intake air temperature	PR059: INLET AIR TEMP Cold = EXT AIR TEMP Warm: 30°C	Indicates the intake air temperature in °C. This information is provided by the IAT sensor. Default value: 30°C.	In the event of a malfunction, perform the trouble diagnosis for DTC P0070 IAT SENSOR.
4	Battery voltage	PR074: BATTERY VOL	12 V < BATTERY VOL < 14.4V	In the event of a malfunction, perform the trouble diagnosis for CHARGING SYSTEM.

AIR CIRC SUBFUNCTION (TURBOCHARGING/INLET.)

Test Condition: Engine Stopped and Ignition Switch ON

Order	Function	Parameter or status check or action	Display and notes	Trouble diagnosis
1	Intake air temperature	PR059: INLET AIR TEMP Cold = EXT AIR TEMP Warm: 30°C	Indicates the intake air temperature in °C. This information is provided by the IAT sensor. Default value: 30°C.	In the event of a malfunction, perform the trouble diagnosis for DTC P0070 IAT SENSOR.

Order	Function	Parameter or status check or action	Display and notes	Trouble diagnosis
2	Intake air pressure	PR035: ATOMOS PRESS	Indicates the ambient barometric pressure in mbar. The sensor is incorporated in the ECM.	If not consistent, check ATOMOS PRESS, INLET PRESS (in DATA MONITOR mode) and local ambient barometric pressure, with the engine stopped and ignition switch ON.
		PR032: INLET PRESS	Indicates the pressure in the turbocharger in mbar.	
3	Air flow	PR132: AIR FLOW	Mass air flow estimated by the ECM.	NONE.
4	Intake air temperature sensor voltage	PR081: INLET TMP S V	Indicates the voltage delivered by the ECM to supply the intake air temperature sensor.	NONE.
5	Engine speed	PR055: ENGINE SPEED	Indicates the engine's rotational speed in rpm.	In the event of a malfunction, perform the trouble diagnosis for DTC P0335 CKP SENSOR.

Test Condition: Engine at Idle

Order	Function	Parameter or status check or action	Display and notes	Trouble diagnosis
1	Intake air temperature	PR059: INLET AIR TEMP Cold = EXT AIR TEMP Warm: 30°C	Indicates the intake air temperature in °C. This information is provided by the IAT sensor. Default value: 30°C.	In the event of a malfunction, perform the trouble diagnosis for DTC P0070 IAT SENSOR.
2	Air circuit pressure	PR035: ATOMOS PRESS	Indicates the ambient barometric pressure in mbar. The sensor is incorporated in the ECM.	If not consistent, check ATOMOS PRESS, INLET PRESS (in DATA MONITOR mode) and local ambient barometric pressure, with the engine stopped and ignition switch ON.
		PR032: INLET PRESS	Indicates the pressure in the turbocharger in mbar.	
3	Air flow	PR132: AIR FLOW 350 < Cold< 400 mg/piston stroke 300 < Warm < 350 mg/piston stroke	Air flow estimated by the ECM.	NONE.
4	Intake temperature sensor voltage	PR081: INLET TMP S V	Indicates the voltage delivered by the computer to supply the inlet temperature sensor	NONE.
5	Engine speed	PR055: ENGINE SPEED Cold: 900 rpm V Warm: 805 rpm	Indicates the engine's rotational speed in rpm.	In the event of a malfunction, perform the trouble diagnosis for DTC P0335 CKP SENSOR.

ENGINE COOLING SUB FUNCTION

Test Condition: Engine Stopped and Ignition Switch ON

Order	Function	Parameter or status check or action	Display and notes	Trouble diagnosis
1	Engine coolant temperature	PR064: WATER TEMP Warm: 90°C	Indicates the engine coolant temperature in °C. Default value: 80°C	In the event of a malfunction, perform the trouble diagnosis for DTC P0115 ECT SENSOR.

Test Condition: Engine at Idle

Order	Function	Parameter or status check or action	Display and notes	Trouble diagnosis
1	Engine coolant temperature	PR064: WATER TEMP Warm: 90°C	Indicates theengine coolant temperature in °C. Default value: 80 °C.	In the event of a malfunction, perform the trouble diagnosis for DTC P0115 ECT SENSOR.

DRIVER PARAMETERS SUB FUNCTION

Test Condition: Engine Stopped and Ignition Switch ON

Order	Function	Parameter or status check or action	Display and notes	Trouble diagnosis
1	Accelerator pedal position	PR030: ACCEL/PDL POS 0%	Indicates the percentage of the accelerator pedal position between no load and full load position. 0% < ACCEL/PDL POS < 100%	In the event of a malfunction, perform the trouble diagnosis for APP SENSOR (DTC P0225, P0651 and P2120) and DTC P0641 SENSOR POWER SUPPLY.
2	Accelerator pedal position sensor voltage	PR086: PL PTNMR T1 V 16% PR088: PL PTNMR T2 V 7%	Indicates the voltage supply percentage for the accelerator pedal position sensor 1 and 2. 10% < PL PTNMR T1 V < 20% 5% < PL PTNMR T2 V < 15%	In the event of a malfunction, perform the trouble diagnosis for APP SENSOR (DTC P0225, P0651 and P2120) and DTC P0641 SENSOR POWER SUPPLY.

Test Condition: Engine at Idle

Order	Function	Parameter or status check or action	Display and notes	Trouble diagnosis
1	Accelerator pedal position	PR030: ACCEL/PDL POS 0%	Indicates the percentage of the accelerator pedal position between no load and full load position. 0% < ACCEL/PDL POS < 100%	
2	Accelerator pedal position sensor voltage	PR086: PL PTNMR T1 V 16% PR088: PL PTNMR T2 V 7%	Indicates the voltage supply percentage for the accelerator pedal position sensor 1 and 2. 10% < PL PTNMR T1 V < 20% 5% < PL PTNMR T2 V < 15%	In the event of a malfunction, perform the trouble diagnosis for APP SENSOR (DTC P0225, P0651 and P2120) and DTC P0641 SENSOR POWER SUPPLY.

ANTIPOLLUTION/OBD SUBFUNCTION

Test Condition: Engine Stopped and Ignition Switch ON

Order	Function	Parameter or status check or action	Display and notes	Trouble diagnosis
1	EGR volume control	ET008: EGR SOL/V CNT INACTIVE	Indicates the condition of the EGR volume control. ● INACTIVE: The valve is not controlled by the ECM. ● ACTIVE: The valve is controlled by the ECM.	NONE.
2	Ambient barometric pressure	PR035: ATOMOS PRESS	Indicates the ambient barometric pressure in mbar. The sensor is incorporated in the ECM.	If not consistent, check ATOMOS PRESS, INLET PRESS (in DATA MONITOR mode) and local ambient barometric pressure, with the engine stopped and ignition switch ON.
3	Mass air flow	PR132: AIR FLOW	Air flow estimated by the ECM.	NONE.
4	Fuel flow	PR017: FUEL FLOW 0.0 mg/piston stroke	Indicates the fuel flow out of the fuel pump in mg/piston stroke.	NONE.
5	EGR volume control valve control	PR005: EGR/V OPN REF Warm or cold = - 50	Indicates a theoretical EGR volume control valve opening value for optimum engine operation. EGR/V OPN REF = EGR PO RECOPY	NOTE.

Order	Function	Parameter or status check or action		Display and notes	Trouble diagnosis
6	EGR volume control valve position feedback	PR051:	EGR PO RECOPY Warm or cold = - 50	Indicates the actual value of the EGR volume control valve position. EGR PO RECOPY = EGR/V OPN REF	NOTE.
7	EGR volume control valve control position sensor voltage	PR077:	EGR POS SE VO 1.09 V	Indicates the EGR volume control valve control position sensor voltage according to the valve position. ● INACTIVE: The valve is not controlled by the ECM ● ACTIVE: The valve is controlled by the ECM. 0.5V < EGR POS SE VO < 4.8V	NOTE.
8	Accelerator pedal position	PR030:	ACCEL/PDL POS 0%	Indicates the percentage of the accelerator pedal position between no load and full load position. ACCEL/PDL POS = 0%	In the event of a malfunction, perform the trouble diagnosis for APP SENSOR (DTC P0225, P0651 and P2120) and DTC P0641 SENSOR POWER SUPPLY.
9	Engine coolant temperature	PR064:	WATER TEMP Warm: 90°C	Indicates the engine coolant temperature in °C. Default value: 80°C.	In the event of a malfunction, perform the trouble diagnosis for DTC P0115 ECT SENSOR.

Test Condition: Engine at Idle

Order		Parameter or status check or action		Display and notes	Trouble diagnosis
1	EGR volume control	ET008:	EGR SOL/V CNT INACTIVE	Indicates the condition of the EGR volume control. ● INACTIVE: The valve is not controlled by the ECM. ● ACTIVE: The valve is controlled by the ECM.	NONE.
2	Ambient barometric pressure	PR035:	ATOMOS PRESS	Indicates the ambient barometric pressure in mbar. The sensor is incorporated in the ECM.	If not consistent, check ATOMOS PRESS, INLET PRESS (in DATA MONITOR mode) and local ambient barometric pressure, with the engine stopped and ignition switch ON.
3	Air flow	PR132:	AIR FLOW 350 < Cold < 400 mg/piston stroke 300 < Warm< 350 mg/piston stroke	Air flow estimated by the ECM.	NONE.
4	Fuel flow	PR017:	FUEL FLOW 10 < Cold < 12 mg/piston stroke 4 < Warm < 6 mg/piston stroke	Indicates the fuel flow out of the fuel pump in mg/piston stroke.	NONE.
5	EGR volume control valve control	PR005:	EGR/V OPN REF Warm: 20%	Indicates a theoretical EGR volume control valve opening value for optimum engine operation.	NONE.
6	EGR volume control valve position feedback	PR051:	EGR PO RECOPY Warm: approx. 20%	Indicates the actual value of the EGR volume control valve position. Default value: 30%	NONE.

Order		Parameter or status check or action	Display and notes	Trouble diagnosis
7	EGR volume control valve control position sensor voltage	PR077: EGR POS SE VO	Indicates the EGR volume control valve control position sensor voltage according to the valve position. ● INACTIVE: The valve is not controlled by the ECM. ● ACTIVE: The valve is controlled by the ECM. 0.5 V < EGR POS SE VO < 4.8 V	NONE.
8	Accelerator pedal position	PR030: ACCEL/PDL POS 0%	Indicates the percentage of the pedal position between no load and full load position 0 < ACCEL/PDL POS < 100%	In the event of a malfunction, perform the trouble diagnosis for APP SENSOR (DTC P0225, P0651 and P2120) and DTC P0641 SENSOR POWER SUPPLY.
9	Engine coolant temperature	PR064: WATER TEMP Warm: 90°C	Indicates the engine coolant temperature in °C. Default value: 80°C.	In the event of a malfunction, perform the trouble diagnosis for DTC P0115 ECT SENSOR.

CONSULT-II Reference Value in Data Monitor Mode

BBS0040Z

Remarks:
● Specification data are reference values.
● Specification data are output/input values which are detected or supplied by the ECM at the connector.
* Specification data may not be directly related to their components signals/values/operations.

MONITOR ITEM	CONDITION		SPECIFICATION
ENGINE SPEED	● Run engine and compare CONSULT-II value with the tachometer indication.		Almost the same speed as the tachometer indication
IDLE REG REF	● Engine speed: Idle ● Air conditioner switch: OFF ● Shift lever: Neutral position ● No load		Approximately 800 rpm
ACCEL/PDL POS	● Ignition switch: ON (Engine stopped)	Accelerator pedal: Fully released	Approximately 0%
WATER TEMP	● Engine: After warming up		More than 70°C (158°F)
FUEL TEMP	● Engine: After warming up		More than 40°C (104°F)
BATTERY VOL	● Ignition switch: ON (Engine stopped)		11 - 14V
ATMOS PRESS	● Ignition switch: ON		Altitude Approx. 0m: Approx. 100.62 kPa (1.0062 bar, 1.026 kg/cm^2 , 14.59 psi) Approx. 1,000 m: Approx. 88.95 kPa (0.8895 bar, 0.907 kg/cm^2 , 12.90 psi) Approx. 1,500 m: Approx. 83.16 kPa (0.8316 bar, 0.848 kg/cm^2 , 12.06 psi) Approx. 2,000 m: Approx. 78.36 kPa (0.7836 bar, 0.799 kg/cm^2 , 11.36 psi)
INLET PRESS	● Engine: After warming up ● Air conditioner switch: OFF ● Shift lever: Neutral position ● No load	Idle	Approximately 980 mbar
		2,000 rpm	Approximately 1,010 mbar
AIR FLOW	● Engine: After warming up ● Air conditioner switch: OFF ● Shift lever: Neutral position ● No load	Idle	Approximately 200 mg/cp
		2,000 rpm	Approximately 270 mg/cp

MONITOR ITEM	CONDITION		SPECIFICATION
VEHICLE SPEED	● Turn drive wheels and compare CONSULT-II value with the speedometer indication		Almost the same speed as the speedometer indication
RAIL PRESSURE	● Engine: After warming up ● Air conditioner switch: OFF ● Shift lever: Neutral position ● No load	Idle	Approximately 230 bar
		2,000 rpm	Approximately 450 bar
RAIL PRES SET	● Engine: After warming up ● Air conditioner switch: OFF ● Shift lever: Neutral position ● No load	Idle	Approximately 230 bar
		2,000 rpm	Approximately 450 bar
FUEL FLOW	● Engine: After warming up ● Air conditioner switch: OFF ● Shift lever: Neutral position ● No load	Idle	Approximately 4.9 mg/cp
		2,000 rpm	Approximately 3.5 mg/cp
EGR PO RECOPY	● Engine: After warming up ● Air conditioner switch: OFF ● Shift lever: Neutral position ● No load	Idle	Approximately -50 %
EGR/V OPN REEF	● Engine: After warming up ● Air conditioner switch: OFF ● Shift lever: Neutral position ● No load	Idle	Approximately -50 %
REFGERNT PRSS	● Engine: After warming up ● Air conditioner switch: OFF ● Shift lever: Neutral position ● No load	Idle	Approximately 5.7 bar
PWR ABSOB A/C	● Engine: After warming up ● Air conditioner switch: OFF ● Shift lever: Neutral position ● No load	Idle	Approximately 0 W
PL PTNMR T1 V	● Ignition switch: ON (Engine stopped)	Accelerator pedal: Fully released	Approximately 15 %
PL PTNMR T2 V	● Ignition switch: ON (Engine stopped)	Accelerator pedal: Fully released	Approximately 6 %
EGR POS SE VO	● Engine: After warming up ● Air conditioner switch: OFF ● Shift lever: Neutral position ● No load	Idle	Approximately 3.56 V
INLET TMP S V	● Engine: After warming up ● Air conditioner switch: OFF ● Shift lever: Neutral position ● No load	Idle	Approximately 1.6 V

MONITOR ITEM	CONDITION		SPECIFICATION
RAIL PRES S V	● Engine: After warming up ● Air conditioner switch: OFF ● Shift lever: Neutral position ● No load	Idle	Approximately 1 V
		2,000 rpm	Approximately 1.5 V
H R ATHD MX P	● Engine: After warming up ● Air conditioner switch: OFF ● Shift lever: Neutral position ● No load	Idle	Approximately 20 W

TROUBLE DIAGNOSIS FOR INTERMITTENT INCIDENT

PFP:00006

Description

BBS00411

Intermittent incidents may occur. In many cases, the incident resolves itself (the part or circuit function returns to normal without intervention). It is important to realize that the symptoms described in the customer's complaint often do not recur on DTC visits. Realize also that the most frequent cause of intermittent incidents occurrences is poor electrical connections. Because of this, the conditions under which the incident occurred may not be clear. Therefore, circuit checks made as part of the standard diagnostic procedure may not indicate the specific malfunctioning area.

Diagnostic Procedure

BBS00412

1. INSPECTION START

Erase DTCs. Refer to EC-1628, "How to Erase DTC" .

>> GO TO 2.

2. CHECK GROUND TERMINALS

Check ground terminals for corroding or loose connection.
Refer to EC-1703, "Ground Inspection" .

OK or NG

OK >> GO TO 3.
NG >> Repair or replace.

3. SEARCH FOR ELECTRICAL INCIDENT

Perform GI-25, "How to Perform Efficient Diagnosis for an Electrical Incident" , “INCIDENT SIMULATION TESTS”.

OK or NG

OK >> **INSPECTION END**
NG >> Repair or replace.

POWER SUPPLY AND GROUND CIRCUIT

PFP:24110

Wiring Diagram

BBS00413

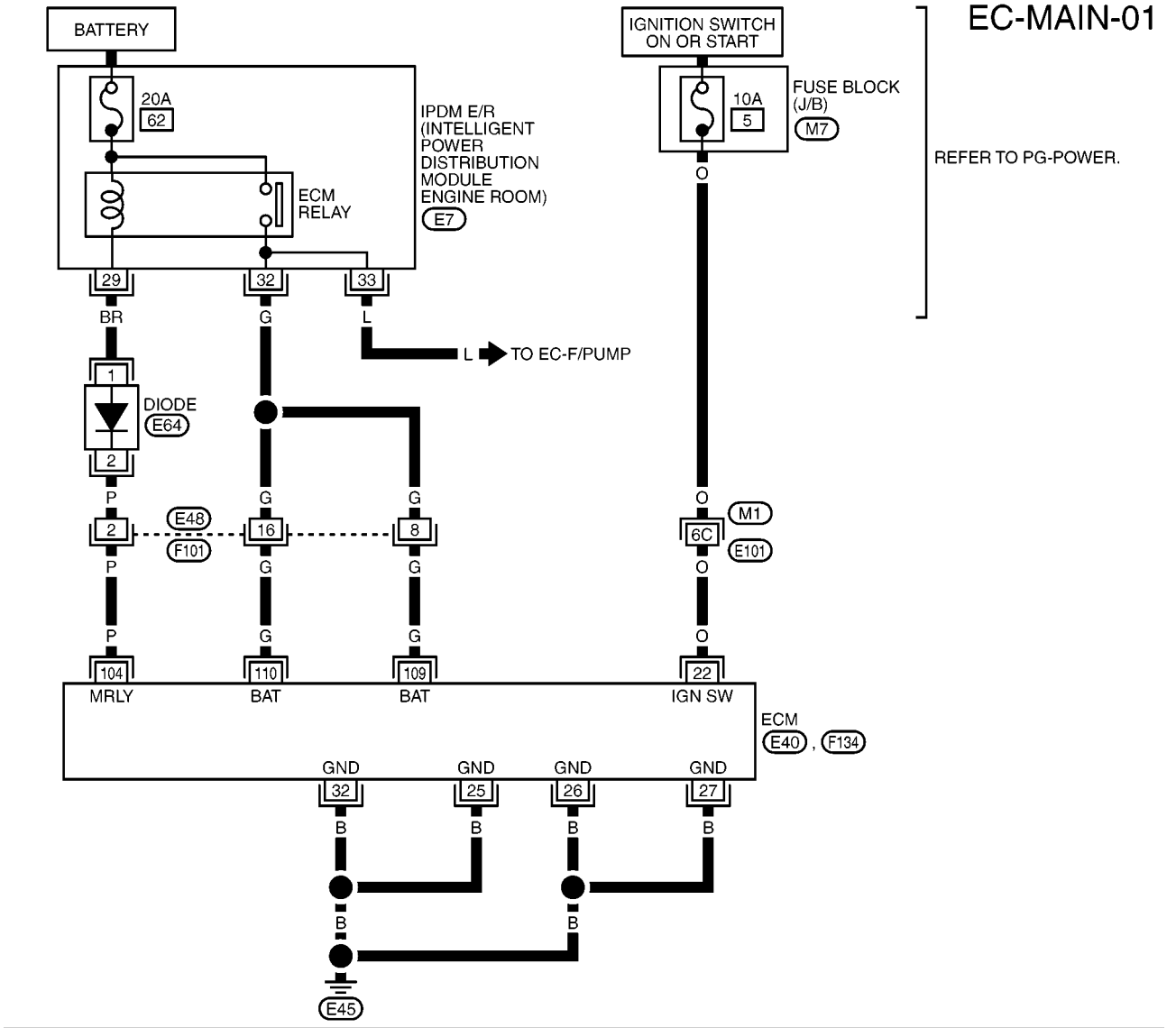

REFER TO THE FOLLOWING.
M1 , F101 - SUPER MULTIPLE JUNCTION (SMJ)
M7 - FUSE BLOCK - JUNCTION BOX (J/B)

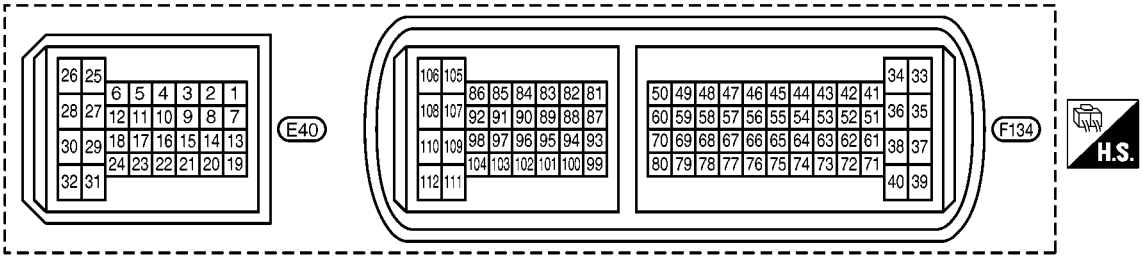

MBWA1564E

Remarks: Specification data are reference values and are measured between each terminal and ground.

CAUTION:
Do not use ECM ground terminals when measuring input/output voltage. Doing so may result in damage to the ECM's transistor. Use a ground other than ECM terminals, such as the ground.

TERMINAL NO.	WIRE COLOR	ITEM	CONDITION	DATA (DC Voltage and Pulse Signal)
22	O	Ignition switch	**[Ignition switch ON]**	BATTERY VOLTAGE (11 - 14V)
25 26 27	B B B	ECM ground	**[Engine is running]** ● **Warm-up condition** ● Idle speed	Approximately 0V
32	B	ECM ground	**[Engine is running]** ● **Warm-up condition** ● Idle speed	Approximately 0V
104	P	ECM relay (self-shutoff)	**[Ignition switch ON]** **[Ignition switch OFF]** ● For a few seconds after turning ignition switch OFF	Approximately 1.4V
			[Ignition switch OFF] ● More than a few seconds after turning ignition switch OFF	BATTERY VOLTAGE (11 - 14V)
109 110	G G	Power supply for ECM	**[Ignition switch ON]**	BATTERY VOLTAGE (11 - 14V)

Diagnostic Procedure

BBS00414

1. INSPECTION START

Start engine.
Is engine running?

Yes or No

Yes >> GO TO 7.
No >> GO TO 2.

2. CHECK ECM POWER SUPPLY CIRCUIT-I

1. Turn ignition switch ON.
2. Check voltage between ECM terminal 22 and ground with CONSULT-II or tester.

Voltage: Battery voltage

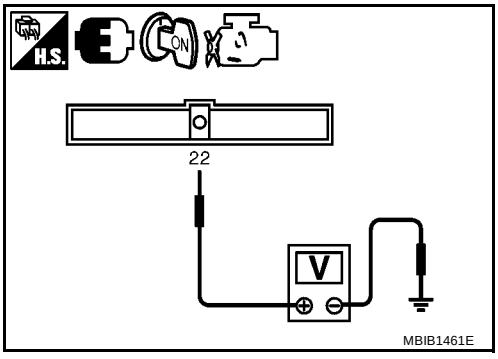

OK or NG

OK >> GO TO 4.
NG >> GO TO 3.

3. DETECT MALFUNCTIONING PART

Check the following.

- Harness connectors M1, E101
- Fuse block (J/B) connector M7
- 10A fuse
- Harness for open or short between ECM and fuse

>> Repair open circuit or short to ground or short to power in harness or connectors.

4. CHECK GROUND CONNECTIONS

1. Turn ignition switch OFF.
2. Loosen and retighten ground screw on the body.
   Refer to EC-1703, "Ground Inspection" .

– Body ground (1)
– Priming pump (2)

OK or NG

OK >> GO TO 5.
NG >> Repair or replace ground connections.

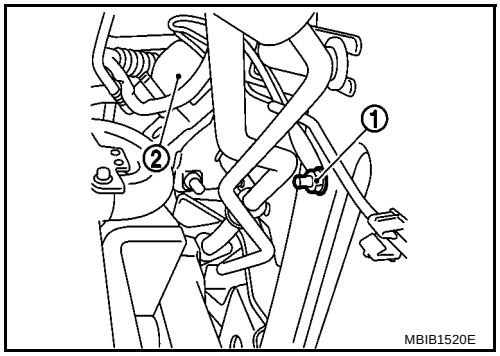

5. CHECK ECM GROUND CIRCUIT FOR OPEN AND SHOR

1. Disconnect ECM harness connector.
2. Check harness continuity between ECM terminals 25, 26, 27, 32 and ground.
   Refer to Wiring Diagram.

   Continuity should exist.

3. Also check harness for short to power.

OK or NG

OK >> GO TO 6.
NG >> Repair open circuit or short to power in harness or connectors.

6. CHECK ECM POWER SUPPLY CIRCUIT-II

1. Reconnect ECM harness connector.
2. Turn ignition switch ON.
3. Check voltage between IPDM E/R terminal 33 and ground with CONSULT-II or tester.

   Voltage: Battery voltage

OK or NG

OK >> Go to EC-1759, "DTC P0231 FUEL PUMP" .
NG >> GO TO 7.

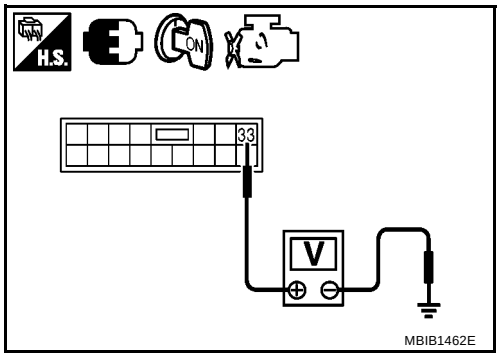

7. CHECK ECM POWER SUPPLY CIRCUIT-III

1. Turn ignition switch OFF and wait at least 10 seconds.
2. Turn ignition switch ON and then OFF.
3. Check voltage between ECM terminals 109, 110 and ground with CONSULT-II or tester.

Voltage: After turning ignition switch OFF, battery voltage will exist for a few seconds, then drop to approximately 0V.

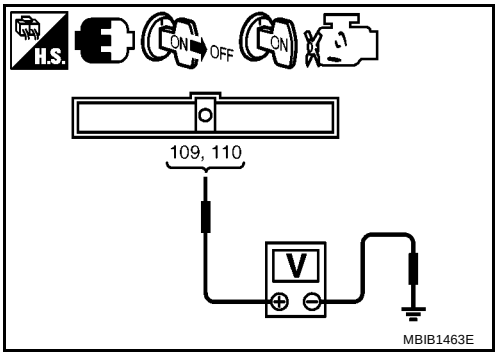

OK or NG

OK >> GO TO 14.
NG (Battery voltage does not exist)>>GO TO 8.
NG (Battery voltage exists for more then a few seconds)>>GO TO 11.

8. CHECK ECM POWER SUPPLY CIRCUIT-IV

1. Turn ignition switch OFF and wait at least 10 seconds.
2. Check voltage between ECM terminal 104 and ground with CONSULT-II or tester.

Voltage: Battery voltage

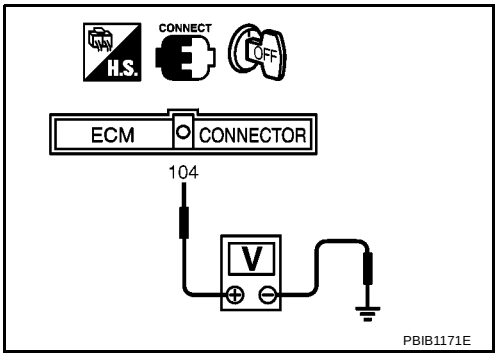

OK or NG

OK >> GO TO 9.
NG >> GO TO 11.

9. CHECK ECM POWER SUPPLY CIRCUIT-V

1. Disconnect ECM harness connector.
2. Disconnect IPDM E/R harness connector E7.
3. Check harness continuity between ECM terminals 109, 110 and IPDM E/R terminal 32. Refer to Wiring Diagram.

Continuity should exist.

4. Also check harness for short to ground and short to power.

OK or NG

OK >> GO TO 16.
NG >> GO TO 10.

10. DETECT MALFUNCTIONING PART

Check the following.

- Harness connectors E48, F101
- Harness for open or short between ECM and IPDM E/R

>> Repair open circuit or short to ground or short to power in harness or connectors.

11. CHECK ECM POWER SUPPLY CIRCUIT-VI

1. Disconnect ECM harness connector.
2. Disconnect IPDM E/R harness connector E7.
3. Check harness continuity between ECM terminal 104 and IPDM E/R terminal 29 under the following conditions.
   Refer to Wiring Diagram.

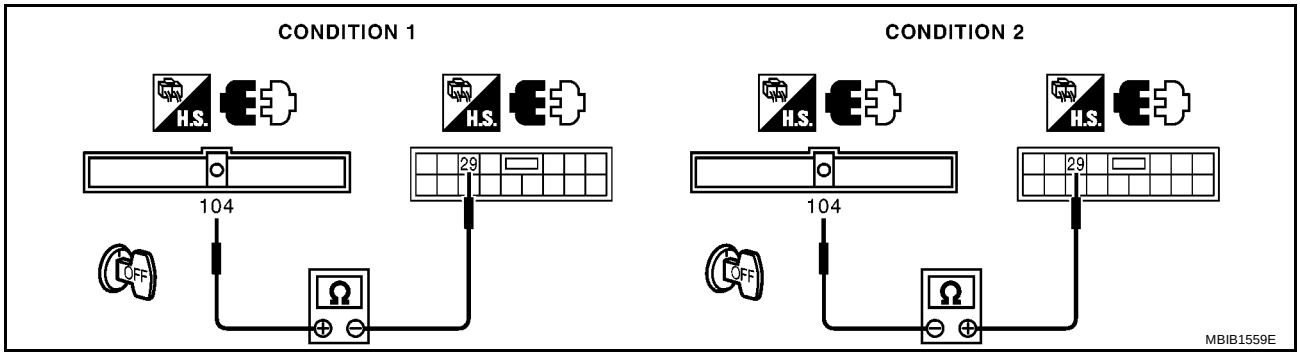

CONDITION 1: Continuity should exist.
CONDITION 2: Continuity should not exist.

4. Also check harness for short to ground and short to power.

OK or NG

OK >> GO TO 13.
NG >> GO TO 12.

12. DETECT MALFUNCTIONING PART

Check the following.

- Harness connectors E48, F101
- Diode E64
- Harness for open or short between ECM and IPDM E/R

>> Repair open circuit or short to ground or short to power in harness or connectors.

13. CHECK 20A FUSE

1. Disconnect 20 A fuse.
2. Check 20A fuse

OK or NG

OK >> GO TO 16.
NG >> Replace 20A fuse.

14. CHECK GROUND CONNECTIONS

1. Turn ignition switch OFF.
2. Loosen and retighten ground screw on the body.
   Refer to EC-1703, "Ground Inspection" .

– Body ground (1)
– Priming pump (2)

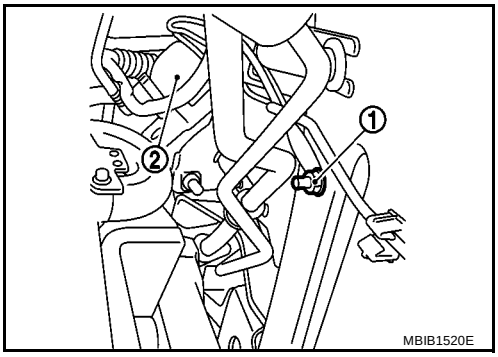

OK or NG

OK >> GO TO 15.
NG >> Repair or replace ground connections.

15. CHECK ECM GROUND CIRCUIT FOR OPEN AND SHORT

1. Disconnect ECM harness connector.
2. Check harness continuity between ECM terminals 25, 26, 27, 32 and ground.
   Refer to Wiring Diagram.

   Continuity should exist.

3. Also check harness for short to power.

OK or NG

OK >> GO TO 16.
NG >> Repair open circuit or short to power in harness or connectors.

16. CHECK INTERMITTENT INCIDENT

Refer to EC-1697, "TROUBLE DIAGNOSIS FOR INTERMITTENT INCIDENT" .

OK or NG

OK >> Replace IPDM E/R. Refer to PG-18, "IPDM E/R (INTELLIGENT POWER DISTRIBUTION MODULE ENGINE ROOM)" .
NG >> Repair open circuit or short to ground or short to power in harness or connectors.

Ground Inspection

BBS00416

Ground connections are very important to the proper operation of electrical and electronic circuits. Ground connections are often exposed to moisture, dirt and other corrosive elements. The corrosion (rust) can become an unwanted resistance. This unwanted resistance can change the way a circuit works.
Electronically controlled circuits are very sensitive to proper grounding. A loose or corroded ground can drastically affect an electronically controlled circuit. A poor or corroded ground can easily affect the circuit. Even when the ground connection looks clean, there can be a thin film of rust on the surface.
When inspecting a ground connection follow these rules:

- Remove the ground bolt or screw.
- Inspect all mating surfaces for tarnish, dirt, rust, etc.
- Clean as required to assure good contact.
- Reinstall bolt or screw securely.
- Inspect for “add-on” accessories which may be interfering with the ground circuit.
- If several wires are crimped into one ground eyelet terminal, check for proper crimps. Make sure all of the wires are clean, securely fastened and providing a good ground path. If multiple wires are cased in one eyelet make sure no ground wires have excess wire insulation.

For detailed ground distribution information, refer to PG-38, "Ground Distribution" .

Ground Inspection

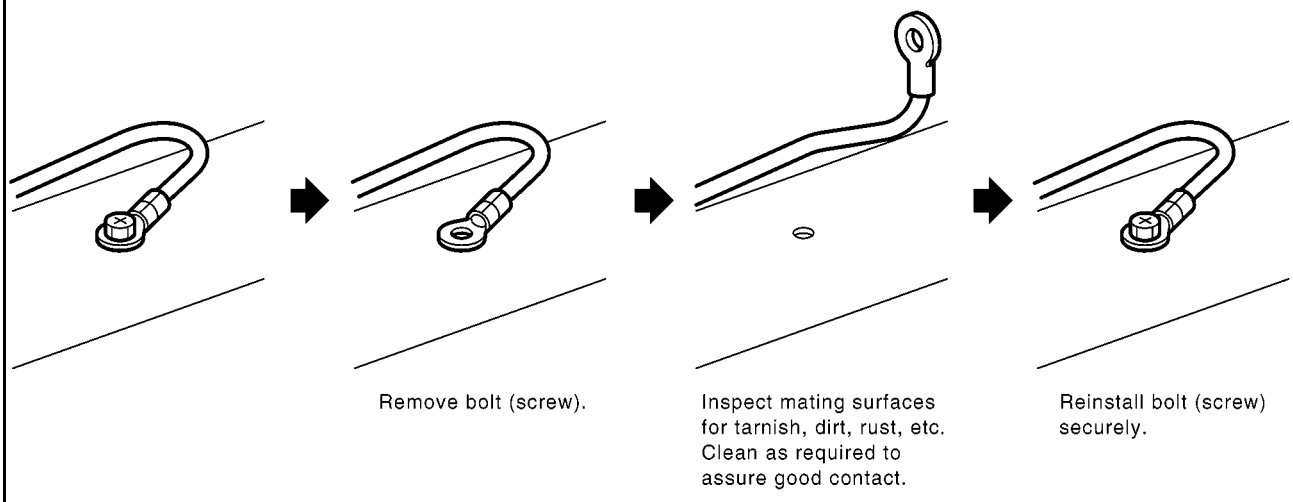

DTC PC001 CAN COMMUNICATION LINE

PFP:22693

Description

BBS0041O

CAN (Controller Area Network) is a serial communication line for real time application. It is an on-vehicle multiplex communication line with high data communication speed and excellent error detection ability. Many electronic control units are equipped onto a vehicle, and each control unit shares information and links with other control units during operation (not independent). In CAN communication, control units are connected with 2 communication lines (CAN H line, CAN L line) allowing a high rate of information transmission with less wiring. Each control unit transmits/receives data but selectively reads required data only.

On Board Diagnosis Logic

BBS0041P

DTC No.	Trouble diagnosis name	Possible cause
PC001	MULTIPLEX NETWORK (CAN COMMUNICATION LINE) ● 1.DEF: Carry out the multiplex network toruoble diagnosis	● Harness or connectors (CAN communication line is open or shorted)

NOTE:

- **Special notes:**
  - **Malfunction indicator (Red) lights up.**

Wiring Diagram

BBS0041R

EC-CAN-01

: DATA LINE

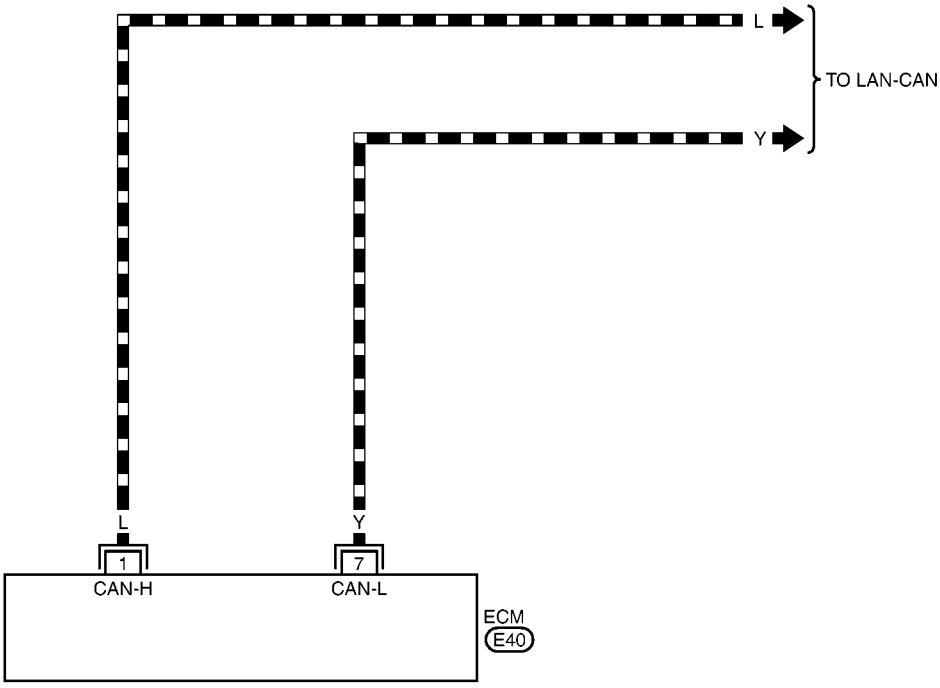

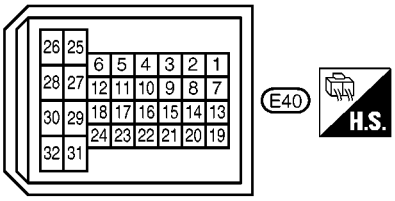

MBWA1568E

Diagnostic Procedure

BBS0041S

Go to LAN-27, "CAN Communication Unit" .

DTC P0016 CKP - CMP CORRELATION

PFP:10328

On Board Diagnosis Logic

BBS0041T

DTC No.	Trouble diagnosis name	Possible cause
P0016	CRANKSHAFT POSITION - CAMSHAFT POSITION CORRELATION	● Harness or connectors (CMP sensor circuit is open or shorted.) ● Harness or connectors (CKP sensor circuit is open or shorted.) ● Camshaft position sensor ● Crankshaft position sensor ● Timing belt ● Signal plate

NOTE:

- **If DTC P0016 is displayed with DTC P0335 or P0340, first perform trouble diagnosis for DTC P0335 or P0340. Refer to EC-1774, "DTC P0335 CKP SENSOR" or EC-1778, "DTC P0340 CMP SENSOR" .**
- **Conditions for applying the diagnostic procedure to the stored DTCs:**
  The DTC is declared present when cranking the engine or at idle speed.

Diagnostic Procedure

BBS0041V

1. CHECK CAMSHAFT POSITION SENSOR

Refer to EC-1783, "Component Inspection" .

OK or NG

OK >> GO TO 2.
NG >> Replace camshaft position sensor.

2. CHECK SPROCKET

Visually check for chipping signal plate gear tooth.

OK or NG

OK >> GO TO 3.
NG >> Remove debris and clean the signal plate or replace sprocket.

3. CHECK CRANKSHAFT POSITION SENSOR

Refer to EC-1777, "Component Inspection" .

OK or NG

OK >> GO TO 4.
NG >> Replace crankshaft position sensor.

4. CHECK GEAR TOOTH

Visually check for chipping signal plate gear tooth.

OK or NG

OK >> GO TO 5.
NG >> Replace the signal plate.

5. CHECK TIMING BELT

Refer to EM-272, "TIMING BELT" .

OK or NG

OK >> GO TO 6.
NG >> Replace timing belt.

6. CHECK INTERMITTENT INCIDENT

Refer to EC-1697, "TROUBLE DIAGNOSIS FOR INTERMITTENT INCIDENT" .

>> **INSPECTION END**

DTC P0045 TC BOOST CONTROL SORENOID VALVE

PFP:14956

Description

BBS0041W

The turbocharger boost control solenoid valve controls vacuum signal to the turbocharger boost control actuator. By changing the variable nozzle vane opening through the rods, the intake air volume is adjusted.

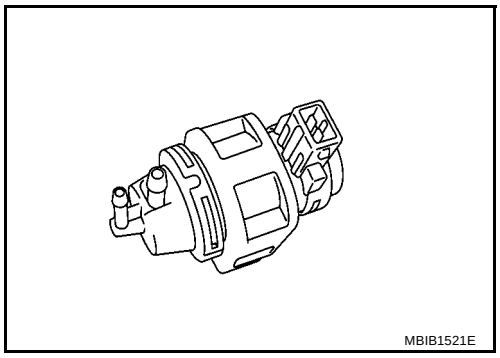

The turbocharger boost control solenoid valve (1) is moved by ON/OFF pulse from the ECM. The longer the ON pulse, the charge air pressure rises.

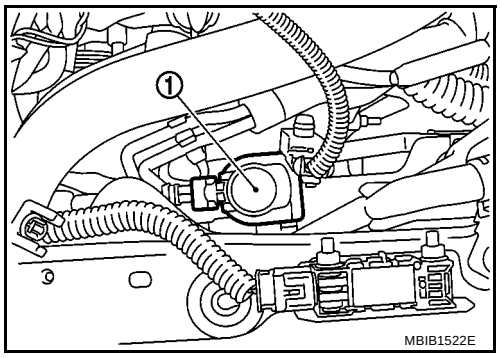

On Board Diagnosis Logic

BBS0041X

DTC No.	Trouble diagnosis name	Possible cause
P0045	TURBOCHARGER BOOST CONTROL SOLENOID VALVE CIRCUIT ● C0.0: Open circuit oe short circuit to ground ● CC.1: Short circuit to +12V	● Harness or connectors (The solenoid valve circuit is open or shorted.) ● Turbocharger boost control solenoid valve ● Turbocharger ● Turbocharger boost sensor ● Air inlet circuit

NOTE:

- **Conditions for applying the diagnostic procedure to the stored DTCs:**
  The DTC is declared present when ignition switch is in the ON position.
- **Special notes:**
  - If this DTC is present, air flow regulation is cut, EGR voluime control valve is closed and turbocharger boost pressure regulation is cut.
  - Suspected injection message displayed on the instrument panel and reduced performance.
  - **Malfunction indicator (Red) lights up.**

Wiring Diagram

BBS0041Z

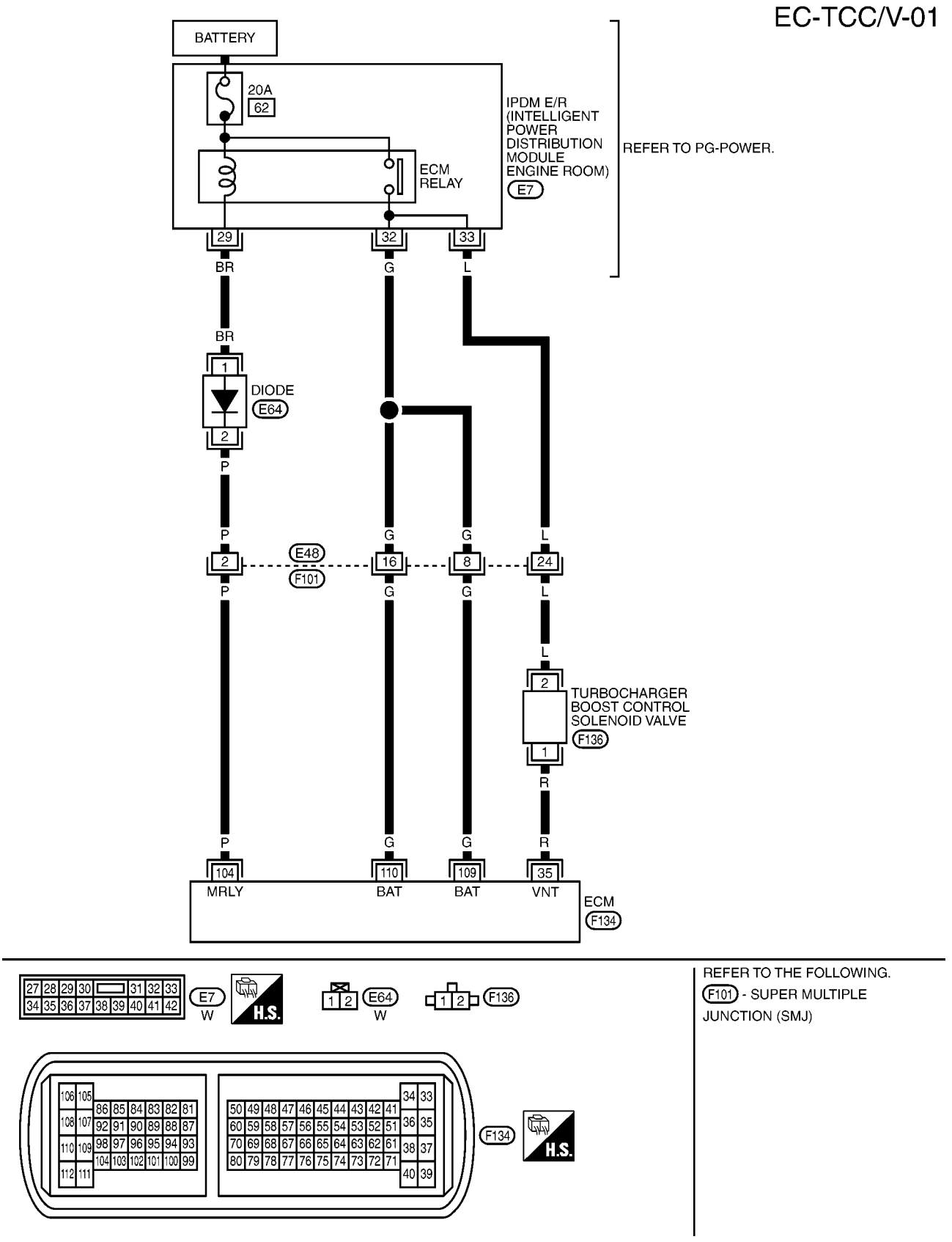

Specification data are reference valves, and are measured between each terminal and ground.
Pulse signal is measured by CONSULT-II.

CAUTION:

Do not use ECM ground terminals when measuring input/output voltage. Doing so may damage the ECM's transistor. Use a ground other than ECM terminals, such as the ground.

TERMINAL NO.	WIRE COLOR	ITEM	CONDITION	DATA (DC Voltage and Pulse Signal)
35	R	Turbocharger boost control solenoid valve	**[Ignition switch ON]** ● **Warm-up condition** ● Idle speed	0 - 12.5V ★ 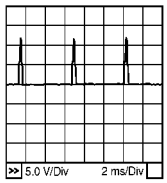 MBIB1504E
			[Ignition switch ON] ● **Warm-up condition** ● Engine speed: 2,000 rpm	0 - 12.5V ★ 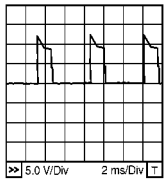 MBIB1505E
104	P	ECM relay (self-shutoff)	**[Ignition switch ON]** **[Ignition switch OFF]** ● For a few seconds after turning ignition switch OFF	Approximately 1.4V
			[Ignition switch OFF] ● More than a few seconds after turning ignition switch OFF	BATTERY VOLTAGE (11 - 14V)
109 110	G G	Power supply for ECM	**[Ignition switch ON]**	BATTERY VOLTAGE (11 - 14V)

★: Average voltage for pulse signal (Actual pulse signal can be confirmed by oscilloscope.)

Diagnostic Procedure

BBS00420

1. CHECK TURBOCHARGER BOOST CONTROL SOLENOID VALVE POWER SUPPLY CIRCUIT

1. Turn ignition switch OFF.
2. Disconnect turbocharger boost control solenoid valve (1) harness connector.
3. Turn ignition switch ON.

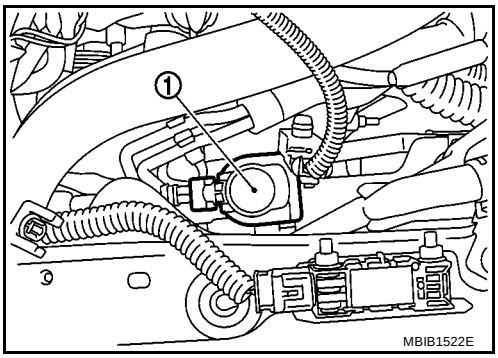

4. Check voltage between turbocharger boost control solenoid valve terminals 2 and ground with CONSULT-II or tester.

Voltage: Battery voltage

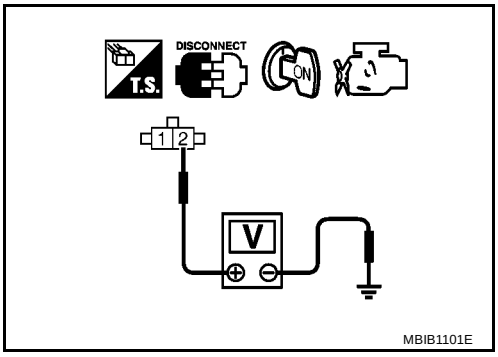

OK or NG

OK >> GO TO 3.
NG >> GO TO 2.

2. DETECT MALFUNCTIONING PART

Check the following.

- Harness connectors E48, F101
- Harness for open and short between turbocharger boost control solenoid valve and IPDM E/R

>> Repair open circuit or short to ground or short to power in harness or connectors.

3. CHECK TURBOCHARGER BOOST CONTROL SOLENOID VALVE OUTPUT SIGNAL CIRCUIT FOR OPEN AND SHORT

1. Turn ignition switch OFF.
2. Disconnect ECM harness connector.
3. Check harness continuity between ECM terminal 35 and turbocharger boost control solenoid valve terminal 1. Refer to Wiring Diagram.

Continuity should exist.

4. Also check harness for short to ground and short to power.

OK or NG

OK >> GO TO 4.
NG >> Repair open circuit or short to ground or short to power in harness or connectors.

4. CHECK TURBOCHARGER BOOST CONTROL SOLENOID VALVE

Refer to EC-1714, "Component Inspection" .

OK or NG

OK >> GO TO 5.
NG >> Replace turbocharger boost control solenoid valve.

5. CHECK OTHER ITEMS

Check the following.

- Turbocharger
- Air inlet circuit (for obstructions, etc.)
- Turbocharger boost pressure sensor signal

OK or NG

OK >> GO TO 6.
NG >> Repair or replace.

6. CHECK INTERMITTENT INCIDENT

Refer to EC-1697, "TROUBLE DIAGNOSIS FOR INTERMITTENT INCIDENT" .

>> **INSPECTION END**

Component Inspection

BBS00421

TURBOCHARGER BOOST CONTROL SOLENOID VALVE

1. Disconnect turbocharger boost control solenoid valve (1) harness connector.

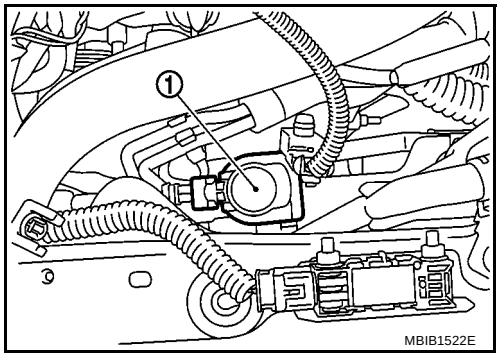

2. Check harness continuity between turbocharger boost control solenoid valve terminals under the following conditions.

Temperature °C (°F)	Resistance kΩ
-30 (-22)	18.6 ± 1.8
23 (73)	21 ± 2.1
110 (230)	18 ± 1.8

If NG, replace turbocharger boost control solenoid valve.

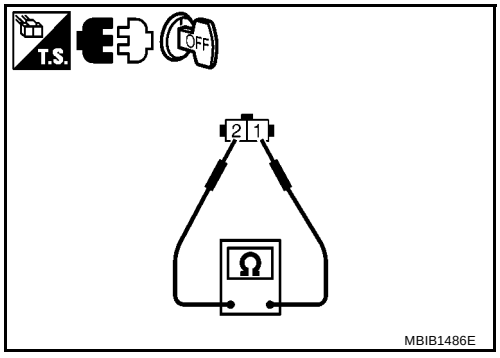

DTC P0070 IAT SENSOR

PFP:22693

Component Description

BBS00422

The intake air temperature sensor (1) is built into mass air flow sensor. The sensor detects intake air temperature and transmits a signal to the ECM.
The temperature sensing unit uses a thermistor which is sensitive to the change in temperature. Electrical resistance of the thermistor decreases in response to the temperature rise.

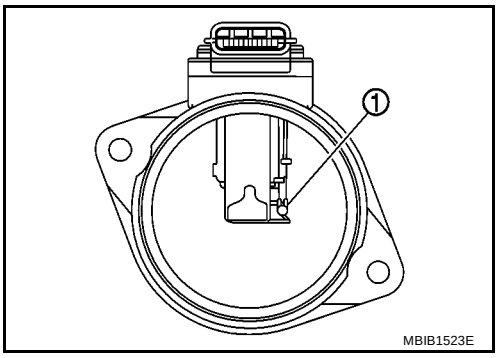

On Board Diagnosis Logic

BBS00423

DTC No.	Trouble diagnosis name	Possible cause
P0070	INTAKE AIR TEMPERATURE SENSOR CIRCUIT ● CO.1: Open circuit or short circuit to +12V ● CC.1: Short circuit to ground	● Harness or connectors (The sensor circuit is open or shorted.) ● Intake air temperature sensor

Wiring Diagram

BBS00425

EC-IATS-01

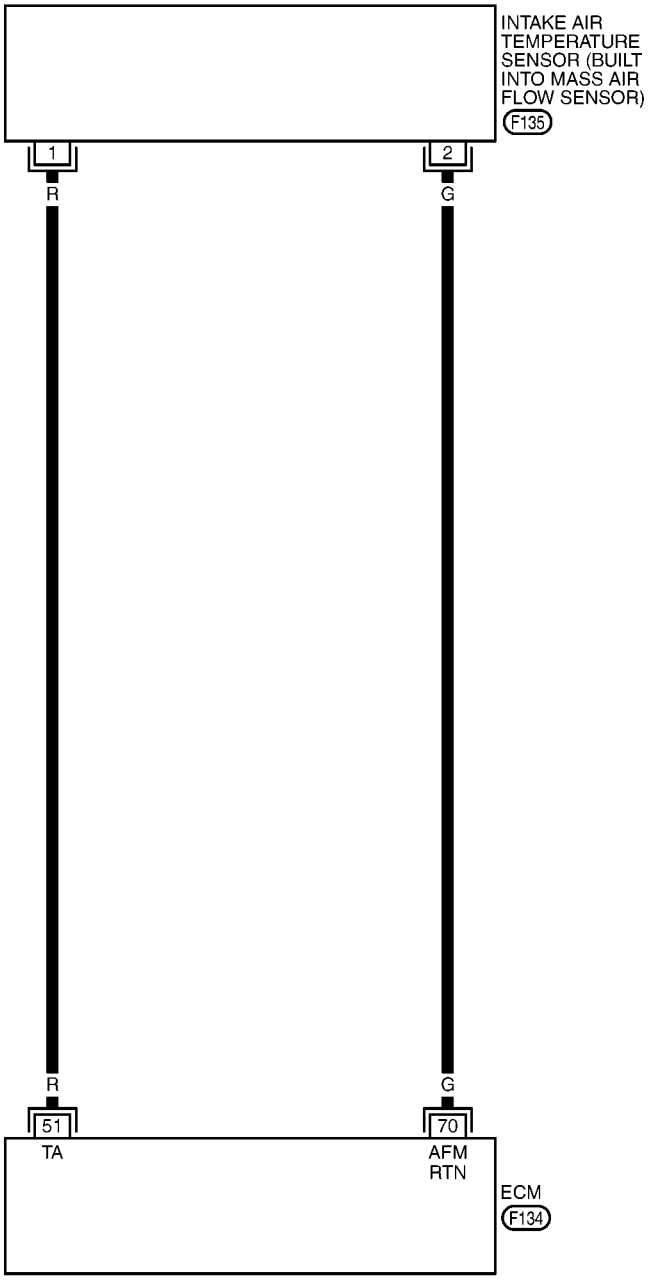

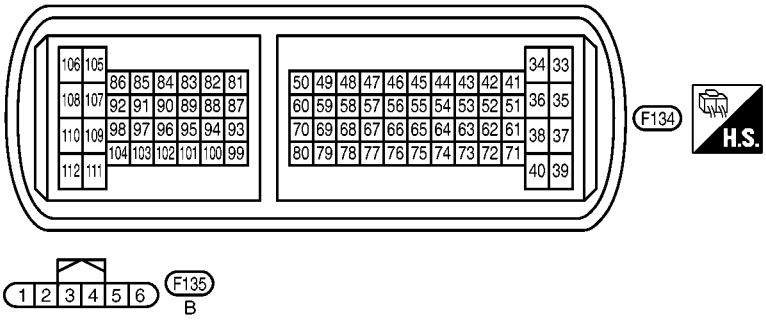

MBWA1547E

Diagnostic Procedure

BBS00426

1. CHECK GROUND CONNECTIONS

1. Turn ignition switch OFF.
2. Loosen and retighten ground screw on the body.
   Refer to EC-1703, "Ground Inspection" .

- Body ground (1)
- Priming pump (2)

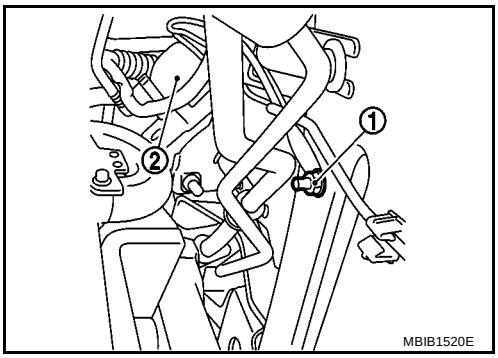

OK or NG

OK >> GO TO 2.
NG >> Repair or replace ground connections.

2. CHECK INTAKE AIR TEMPERATURE SENSOR POWER SUPPLY CIRCUIT

1. Disconnect mass air flow sensor (intake air temperature sensor is built-into) (2) harness connector.

- ⇦: Vehicle front
- Turbocharger boost sensor (1)
- EGR volume control valve (3)

2. Turn ignition switch ON.

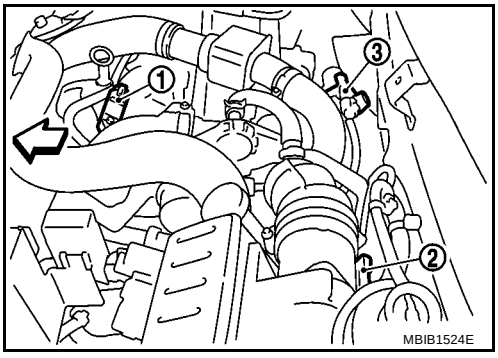

3. Check voltage between MAF sensor terminal 1 and ground with CONSULT-II or tester.

Voltage: Approximately 5.0V

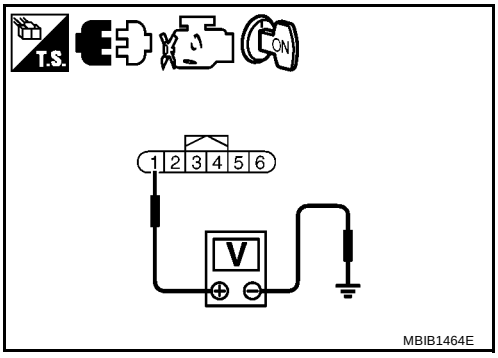

OK or NG

OK >> GO TO 3.
NG >> Repair harness or connectors.

3. CHECK INTAKE AIR TEMPERATURE SENSOR GROUND CIRCUIT FOR OPEN AND SHORT

1. Turn ignition switch OFF.
2. Disconnect ECM harness connector.
3. Check harness continuity between MAF sensor terminal 2 and ECM terminal 70.
   Refer to Wiring Diagram.

Continuity should exist.

4. Also check harness for short to ground and short to power.

OK or NG

OK >> GO TO 4.
NG >> Repair open circuit or short to ground or short to power in harness or connectors.

4. CHECK INTAKE AIR TEMPERATURE SENSOR

Refer to EC-1718, "Component Inspection" .

OK or NG

OK >> GO TO 5.
NG >> Replace mass air flow sensor (with intake air temperature sensor).

5. CHECK INTERMITTENT INCIDENT

Refer to EC-1697, "TROUBLE DIAGNOSIS FOR INTERMITTENT INCIDENT" .

>> **INSPECTION END**

Component Inspection

BBS00427

INTAKE AIR TEMPERATURE SENSOR

1. Check resistance between mass air flow sensor terminals 1 and 2 under the following conditions.

Temperature °C (°F)	Resistance kΩ
-40 (-40)	50,000 ± 6,800
-10 (14)	9,500 ± 900
25 (77)	2,051 ± 120
50 (122)	810 ± 47
80 (176)	310 ± 17

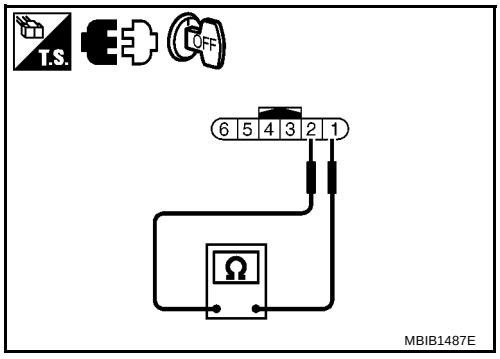

2. If NG, replace mass air flow sensor (with intake air temperature sensor).

Removal and Installation

BBS00428

MASS AIR FLOW SENSOR

Refer to EM-245, "AIR CLEANER AND AIR DUCT" .

DTC P0087 FUEL SYSTEM

PFP:22693

On Board Diagnosis Logic

BBS00429

DTC No.	Trouble diagnosis name	Possible cause
P0087	FUEL FLOW CAPACITY FUNCTION	● Fuel pump ● Fuel injector ● Fuel rail pressure sensor ● Fuel filter ● Air mixed with fuel ● Lack of fuel ● Fuel line

NOTE:
- **Special notes:**
  - **Malfunction indicator (Red) lights up.**

Diagnostic Procedure

BBS0042B

1. CHECK FUEL RAIL PRESSURE SENSOR

Refer to EC-1664, "TEST 7: HIGH PRESSURE SYSTEM CHECK" .

OK or NG

OK >> GO TO 2.
NG >> Replace fuel rail.

2. CHECK FUEL INJECTOR

Refer to EC-1662, "TEST 3: FUEL INJECTOR CHECK" .

OK or NG

OK >> GO TO 4.
NG >> GO TO 3.

3. REPLACE FUEL INJECOR

1. Replace fuel injector of malfunctioning cylinder.
2. Perform Injector Adjustment Value Registration. Refer to EC-1625, "Injector Adjustment Value Registration" .

>> **INSPECTION END**

4. CHECK FUEL PUMP

Refer to EC-1762, "Component Inspection" .

OK or NG

OK >> GO TO 5.
NG >> Replace fuel pump.

5. CHECK FUEL FILTER

Refer to EC-1666, "TEST 11: FUEL FILTER CHECK" .

OK or NG

OK >> GO TO 6.
NG >> Replace fuel filter.

6. CHECK FUEL LINE

Refer to EC-1660, "TEST 1: LOW PRESSURE CIRCUIT CHECK" .

OK or NG

OK >> GO TO 7.
NG >> Repair fuel line.

7. PERFORM HIGH PRESSURE SYSTEM CHECK

Refer to EC-1664, "TEST 7: HIGH PRESSURE SYSTEM CHECK" .

>> **INSPECTION END**

Removal and Installation

BBS0042C

FUEL INJECTOR

Refer to EM-266, "FUEL INJECTOR" .

FUEL PUMP

Refer to EM-268, "HIGH PRESSURE PUMP" .

DTC P0089 FUEL PUMP

PFP:16700

On Board Diagnosis Logic

BBS0042D

DTC No.	Trouble diagnosis name	Possible cause
P0089	FUEL RAIL PRESSURE REGULATION FUNCTION ● 1.DEF: At minimum limit ● 2.DEF: At maximum limit ● 3.DEF: Below minimum threshold ● 4.DEF: Above maximum threshold ● 5.DEF: High flow current < minimum ● 5.DEF: High flow current > maximum ● 7.DEF: Low flow current < minimum ● 8.DEF: Low flow current > maximum	● Fuel pump ● Air mixed with fuel ● Lack of fuel ● Fuel rail pressure sensor

NOTE:

- **Special notes:**
  - **Malfunction indicator (Red) lights up.**

Diagnostic Procedure

BBS0042F

1. CHECK FUEL RAIL PRESSURE SENSOR

Refer to EC-1664, "TEST 7: HIGH PRESSURE SYSTEM CHECK" .

OK or NG

OK >> GO TO 2.
NG >> Replace fuel rail.

2. CHECK FUEL PUMP

Perform EC-1762, "Component Inspection" .

OK or NG

OK >> GO TO 3.
NG >> Replace Fuel pump.

3. CHECK FUEL FILTER

Refer to EC-1666, "TEST 11: FUEL FILTER CHECK" .

OK or NG

OK >> GO TO 4.
NG >> Replace fuel filter.

4. CHECK FUEL LINE

Refer to EC-1665, "TEST 8: HIGH-PRESSURE CIRCUIT LEAK CHECK" .

OK or NG

OK >> GO TO 5.
NG >> Repair fuel line.

5. PERFORM HIGH PRESSURE SYSTEM CHECK

Refer to EC-1664, "TEST 7: HIGH PRESSURE SYSTEM CHECK" .

>> **INSPECTION END**

Removal and Installation

BBS0042G

FUEL PUMP

Refer to EM-268, "HIGH PRESSURE PUMP" .

DTC P0100 MAF SENSOR

PFP:22693

Component Description

BBS0042H

The mass air flow sensor is placed in the stream of intake air.

- Intake air temperature sensor (1)

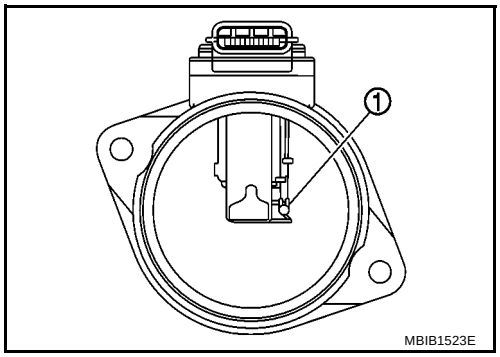

CONSULT-II Reference Value in Data Monitor Mode

BBS0042I

Specification data are reference values.

MONITOR ITEM	CONDITION		SPECIFICATION
AIR FLOW	● Engine: After warming up ● Air conditioner switch: OFF ● Shift lever: Neutral position ● No load	Idle	Approximately 200 mg/cp
		2,000 rpm	Approximately 270 mg/cp

On Board Diagnosis Logic

BBS0042J

DTC No.	Trouble diagnosis name	Possible cause
P0100	MASS AIR FLOW SENSOR CIRCUIT ● 1.DEF: Parmanent low lebel ● 2.DEF: Parmanent high lebel ● 3.DEF: Below minimum threshold ● 4.DEF: Above maximum threshold ● 5.DEF: Parmanent at minimum limit ● 6.DEF: Parmanent at maximum limit	● Harness or connectors (The sensor circuit is open or shorted.) ● Mass air flow sensor ● Air filter obstructed ● Intake air duct obstructed

NOTE:

- **If DTC P0100 is displayed with DTC P0235, first perform trouble diagnosis for DTC P0235. Refer to** **EC-1763, "DTC P0235 TC BOOST SENSOR"** **.**
- **If DTC P0100 is displayed with DTC P0641, first perform trouble diagnosis for DTC P0641. Refer to** **EC-1830, "DTC P0641 SENSOR POWER SUPPLY"** **.**
- **Conditions for applying the diagnostic procedure to the stored DTCs:**
  The DTC is declared present with engine running.
- **Special notes:**
  - If this DTC is present, mass air flow sensor function will stop and EGR voluime control valve is closed.

Wiring Diagram

BBS0042L

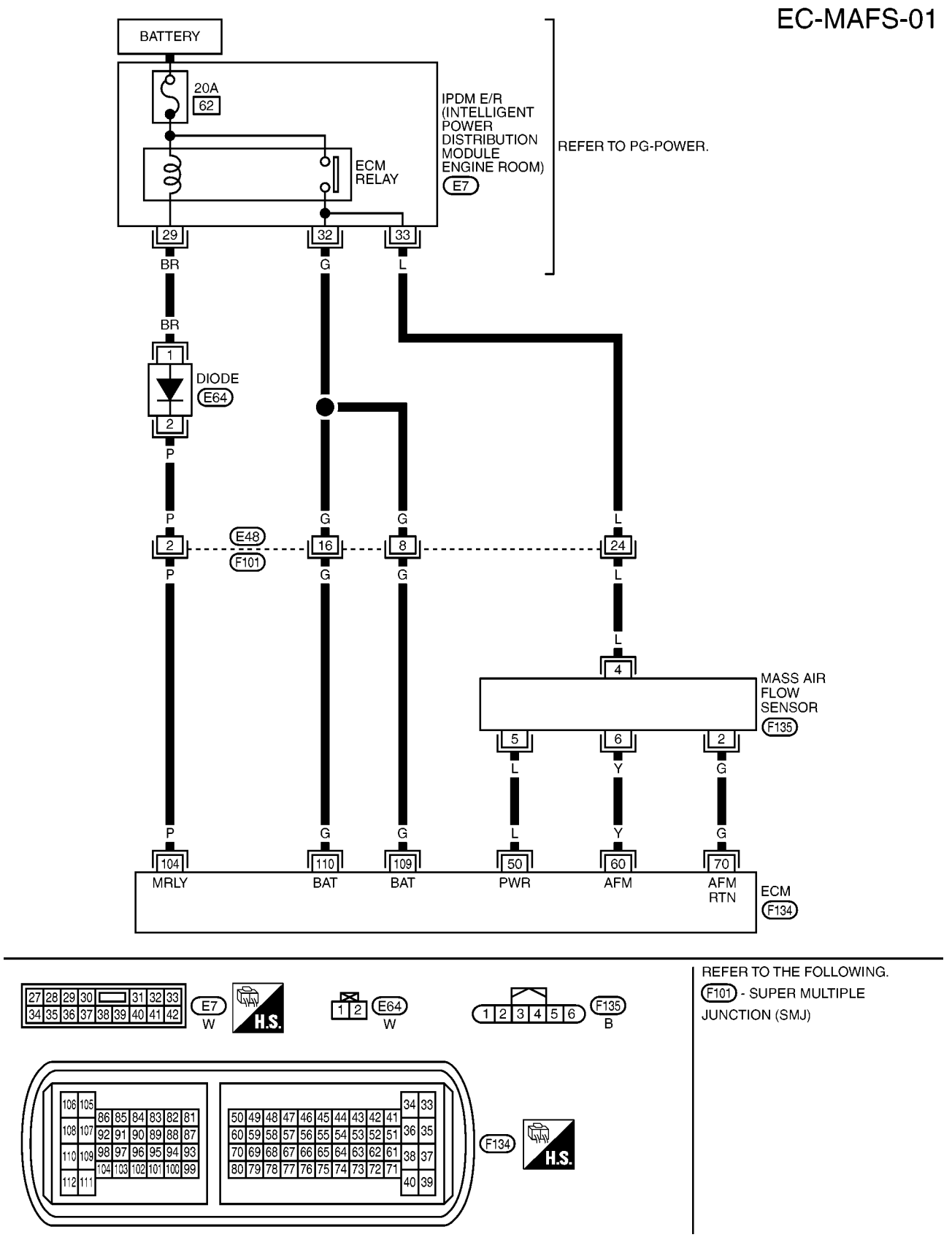

Specification data are reference values, and are measured between each terminal and ground.

CAUTION:

Do not use ECM ground terminals when measuring input/output voltage. Doing so may result in damage to the ECM's transistor. Use a ground other than ECM terminals, such as the ground.

TERMINAL NO.	WIRE COLOR	ITEM	CONDITION	DATA (DC Voltage)
50	L	Sensor power supply (Mass air flow sensor)	**[Ignition switch: ON]**	Approximately 5.0V
60	Y	Mass air flow sensor	**[Ignition switch: ON]**	Approximately 0.36V
			[Engine is running] ● **Warm-up condition** ● Idle speed	Approximately 1.7V
			[Engine is running] ● **Warm-up condition** ● Engine speed: 2,500 rpm.	Approximately 2.2V
70	G	Mass air flow sensor ground	**[Engine is running]** ● **Warm-up condition** ● Idle speed	Approximately 0.3V
104	P	ECM relay (self-shutoff)	**[Ignition switch ON]** **[Ignition switch OFF]** ● For a few seconds after turning ignition switch OFF	Approximately 1.4V
			[Ignition switch OFF] ● More than a few seconds after turning ignition switch OFF	BATTERY VOLTAGE (11 - 14V)
109 110	G G	Power supply for ECM	**[Ignition switch ON]**	BATTERY VOLTAGE (11 - 14V)

Diagnostic Procedure

BBS0042M

1. CHECK AIR FILTER

Check that air filter is not obsstructed.

Yes or No

Yes >> Repair.
No >> GO TO 2.

2. CHECK INTAKE AIR DUCT

Check that intake air duct is not obsstructed.

Yes or No

Yes >> Repair.
No >> GO TO 3.

3. CHECK GROUND CONNECTIONS

1. Turn ignition switch OFF.
2. Loosen and retighten ground screw on the body.
   Refer to EC-1703, "Ground Inspection" .

– Body ground (1)
– Priming pump (2)

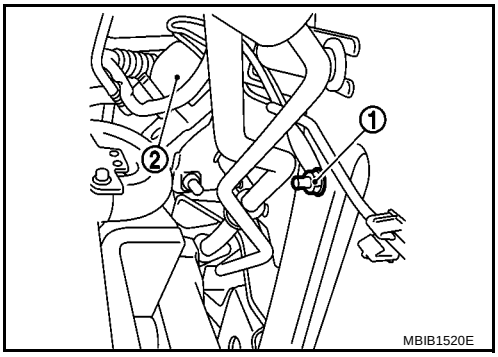

OK or NG

OK >> GO TO 4.
NG >> Repair or replace ground connections.

4. CHECK MAFS POWER SUPPLY CIRCUIT

1. Disconnect mass air flow sensor (2) harness connector.

– ⇦: Vehicle front
– Turbocharger boost sensor (1)
– EGR volume control valve (3)

2. Turn ignition switch ON.

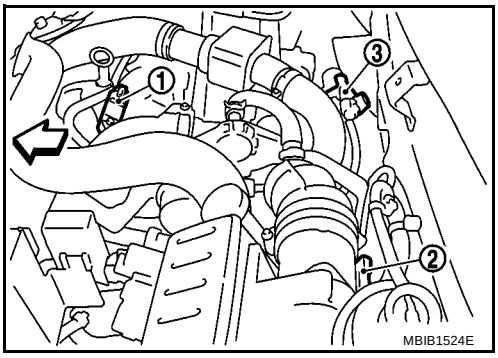

3. Check voltage between mass air flow sensor terminals 4, 5 and ground with CONSULT-II or tester.

Terminal	Voltage
4:	Battery voltage
5:	Approximately 5.0V

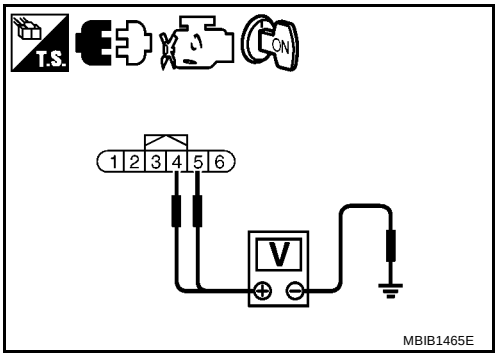

OK or NG

OK >> GO TO 6.
NG >> GO TO 5.

5. DETECT MALFUNCTIONING PART

Check the following.

- Harness connectors E48, F101
- Harness for open or short between mass air flow sensor and IPDM E/R
- Harness for open or short between mass air flow sensor and ECM

>> Repair open circuit or short to ground or short to power in harness or connectors.

6. CHECK MAFS GROUND CIRCUIT FOR OPEN AND SHORT

1. Turn ignition switch OFF.
2. Disconnect ECM harness connector.
3. Check harness continuity between mass air flow sensor terminal 2 and ECM terminal 70. Refer to Wiring Diagram.

Continuity should exist.

4. Also check harness for short to ground and short to power.

OK or NG

OK >> GO TO 7.
NG >> Repair open circuit or short to ground or short to power in harness or connectors.

7. CHECK MAFS INPUT SIGNAL CIRCUIT FOR OPEN AND SHORT

1. Check harness continuity between mass air flow sensor terminal 6 and ECM terminal 60. Refer to Wiring Diagram.

Continuity should exist.

2. Also check harness for short to ground and short to power.

OK or NG

OK >> GO TO 8.
NG >> Repair open circuit or short to ground or short to power in harness or connectors.

8. CHECK MASS AIR FLOW SENSOR

Refer to EC-1726, "Component Inspection" .

OK or NG

OK >> GO TO 9.
NG >> Replace mass air flow sensor.

9. CHECK INTERMITTENT INCIDENT

Refer to EC-1697, "TROUBLE DIAGNOSIS FOR INTERMITTENT INCIDENT" .

>> **INSPECTION END**

Component Inspection

BBS0042N

MASS AIR FLOW SENSOR

1. Reconnect all harness connectors disconnected.
2. Start engine and warm it up to normal operating temperature.
3. Check voltage between ECM terminal 60 (Mass air flow sensor signal) and ground.

Condition	Voltage V
Ignition switch ON (Engine stopped.)	Approx. 0.36
Engine speed: Idle	Approx. 1.7
Engine speed: 2,500 rpm	Approx. 2.2

4. If NG, replace mass air flow sensor.

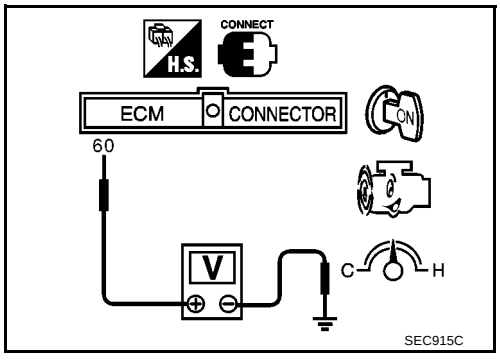

Removal and Installation

BBS0042O

MASS AIR FLOW SENSOR

Refer to EM-245, "AIR CLEANER AND AIR DUCT" .

DTC P0115 ECT SENSOR

PFP:22693

Description

BBS0042P

The engine coolant temperature sensor (1) is used to detect the engine coolant temperature. The sensor modifies a voltage signal from the ECM. The modified signal returns to the ECM as the engine coolant temperature input. The sensor uses a thermistor which is sensitive to the change in temperature. The electrical resistance of the thermistor decreases as temperature increases.

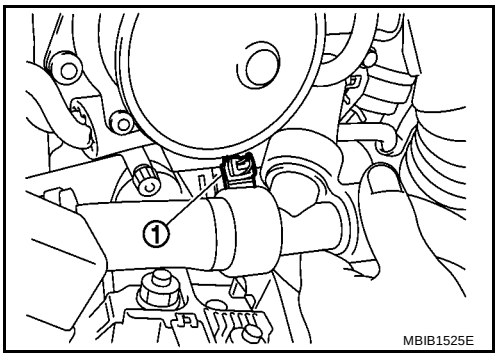

On Board Diagnosis Logic

BBS0042Q

DTC No.	Trouble diagnosis name	Possible cause
P0115	ENGINE COOLANT TEMPERATURE SENSOR CIRCUIT ● CC.0: Short circuit to ground ● CO.1: Short circuit to +12V or open circuit	● Harness or connectors (The sensor circuit is open or shorted.) ● Engine coolant temperature sensor

NOTE:

- **Special notes:**
  - If this DTC is present, cooling fan motor is activated at low speed for vehicles fitted with air conditioning.

Wiring Diagram

BBS0042S

EC-ECTS-01

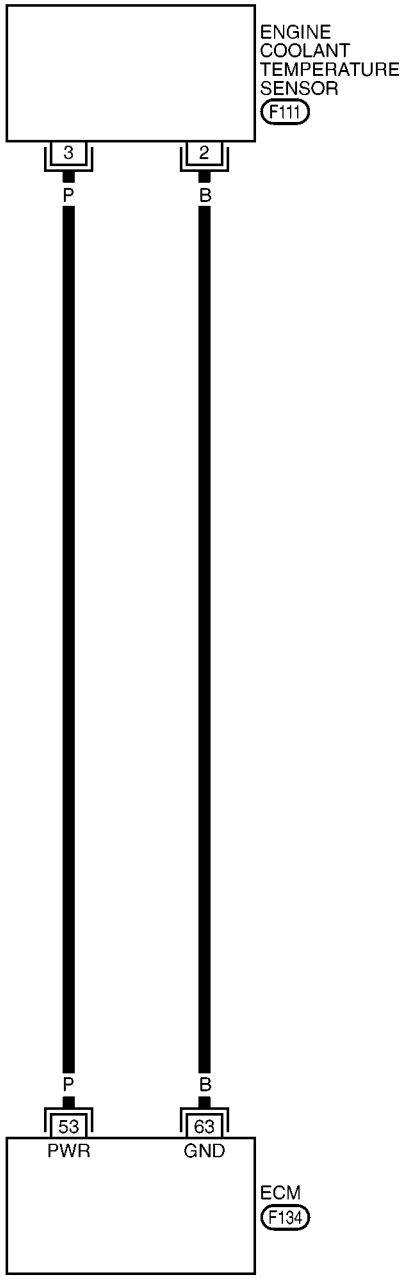

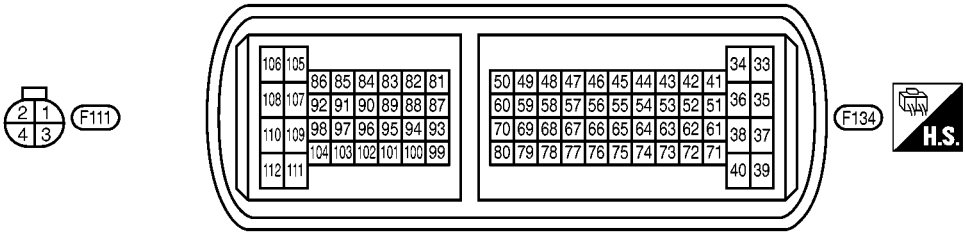

MBWA1549E

Diagnostic Procedure

BBS0042T

1. CHECK GROUND CONNECTIONS

1. Turn ignition switch OFF.
2. Loosen and retighten ground screw on the body.
   Refer to EC-1703, "Ground Inspection" .

- Body ground (1)
- Priming pump (2)

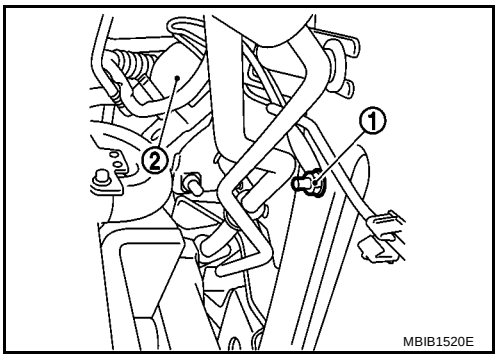

Yes or No

Yes >> GO TO 2.
NG >> Repair or replace ground connections.

2. CHECK ECT SENSOR POWER SUPPLY CIRCUIT

1. Disconnect engine coolant temperature sensor (1) harness connector.
2. Turn ignition switch ON.

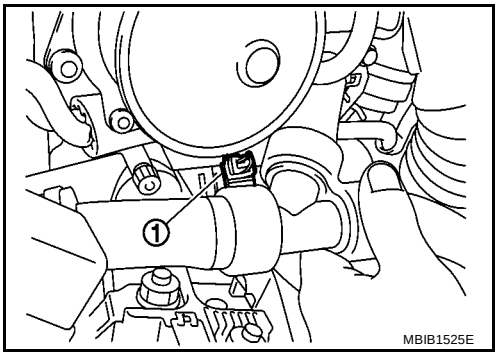

3. Check voltage between ECT sensor terminal 3 and ground with CONSULT-II or tester.

Voltage: Approximately 5.0V

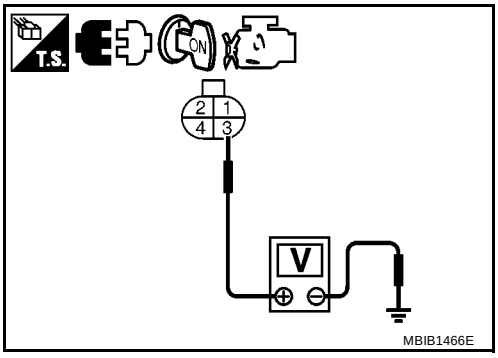

OK or NG

OK >> GO TO 3.
NG >> Repair harness or connectors.

3. CHECK ECT SENSOR GROUND CIRCUIT FOR OPEN AND SHORT

1. Turn ignition switch OFF.
2. Disconnect ECM harness connector.
3. Check harness continuity between ECT sensor terminal 2 and ECM terminal 63.
   Refer to Wiring Diagram.

Continuity should exist.

4. Also check harness for short to ground and short to power.

OK or NG

OK >> GO TO 4.
NG >> Repair open circuit or short to ground or short to power in harness or connectors.

4. CHECK ENGINE COOLANT TEMPERATURE SENSOR

Refer to EC-1730, "Component Inspection" .

OK or NG

OK >> GO TO 5.
NG >> Replace engine coolant temperature sensor.

5. CHECK INTERMITTENT INCIDENT

Refer to EC-1697, "TROUBLE DIAGNOSIS FOR INTERMITTENT INCIDENT" .

>> **INSPECTION END**

Component Inspection

BBS0042U

ENGINE COOLANT TEMPERATURE SENSOR

1. Check resistance between engine coolant temperature sensor terminals 2 and 3 as shown in the figure.

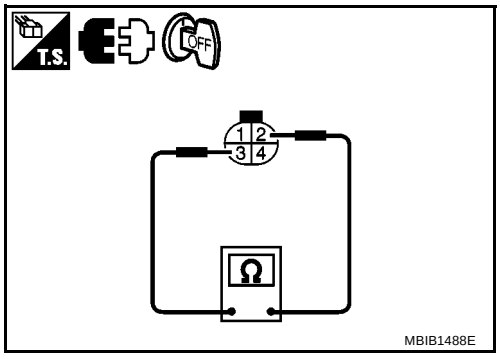

Engine coolant temperature °C (°F)	Resistance kΩ
-40 (-40)	76,000 ± 7,000
-10 (14)	12,500 ± 1,130
25 (77)	2,252 ± 112
50 (122)	810 ± 40
80 (176)	280 ± 8
110 (230)	115 ± 3
120 (248)	88 ± 2

2. If NG, replace engine coolant temperature sensor.

Removal and Installation

BBS0042V

ENGINE COOLANT TEMPERATURE SENSOR

Refer to EM-276, "CYLINDER HEAD" .

DTC P0170 FUEL INJECTOR ADJUSTMENT VALUE

PFP:22693

On Board Diagnosis Logic

BBS0042X

DTC No.	Trouble diagnosis name	Possible cause
P0170	INJECTOR ADJUSTMENT VALUE DATA ERROR	● Injector Adjustment Value is not registered sufficiently

NOTE:

- **If DTC P0170 is displayed with DTC P0200, P0201, P0202, P0203, P0204, first perform trouble diagnosis for other DTC. Refer to EC-1740, "DTC P0200 FUEL INJECTOR" or EC-1745, "DTC P0201 - P0204 FUEL INJECTOR" .**

Diagnostic Procedure

BBS0042Z

1. PERFORM INJECTOR ADJUSTMENT VALUE REGISTRATION

Perform Injector Adjustment Value Registration. Refer to EC-1625, "Injector Adjustment Value Registration" .

>> **INSPECTION END**

DTC P0180 FUEL PUMP TEMPERATURE SENSOR

PFP:22693

Description

BBS00430

Fuel pump temperature sensor is built in the fuel pump. The sensor detects the fuel temperature in the fuel pump and calibrates the fuel injection amount change by fuel temperature.

CONSULT-II Reference Value in Data Monitor Mode

BBS00431

Specification data are reference values.

MONITOR ITEM	CONDITION	SPECIFICATION
FUEL TEMP SEN	● Engine: After warming up	More than 40°C (104°F)

On Board Diagnosis Logic

BBS00432

DTC No.	Trouble diagnosis name	Possible cause
P0180	FUEL PUMP TEMPERATURE SENSOR CIRCUIT ● CC.0: Short circuit to ground ● CO.1: Short circuit to +12V or open circuit	● Harness or connectors (The sensor circuit is open or shorted.) ● Fuel pump temperature sensor

Wiring Diagram

BBS00434

EC-FTS-01

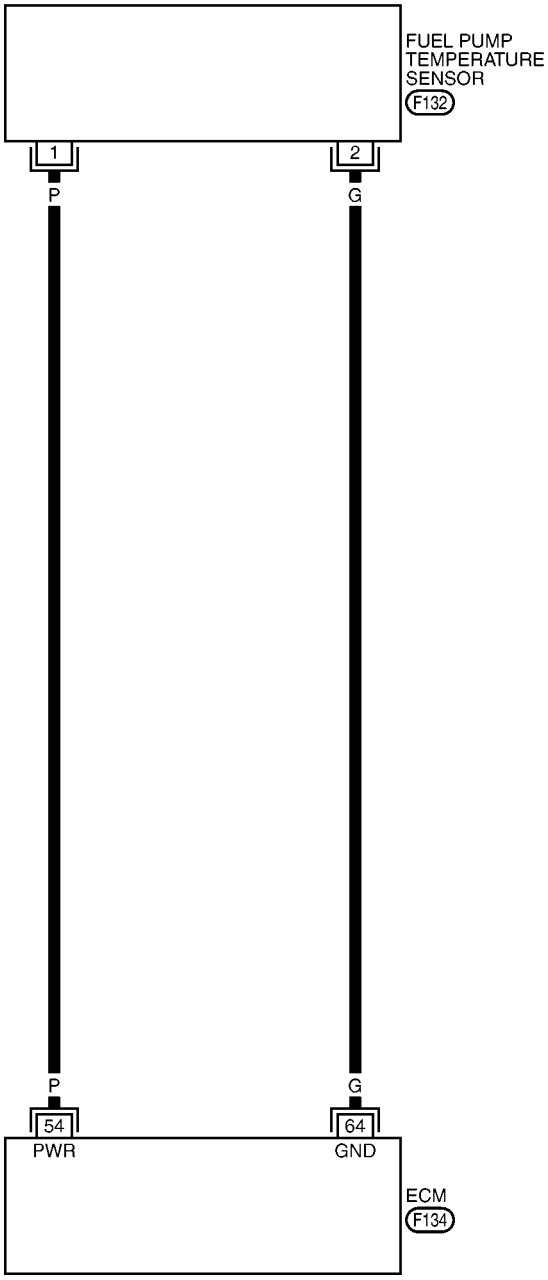

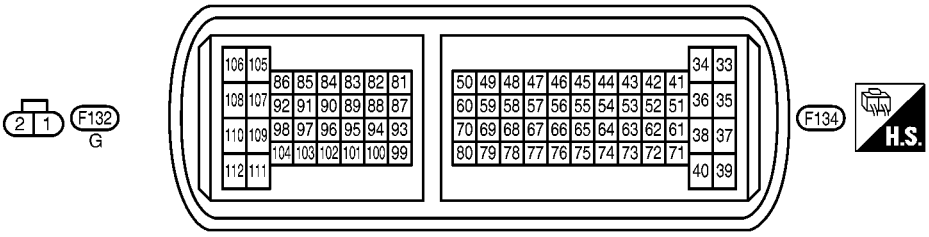

MBWA1550E

Specification data are reference values and are measured between each terminal and ground.

CAUTION:

Do not use ECM ground terminals when measuring input/output voltage. Doing so may result in damage to the ECM's transistor. Use a ground other than ECM terminals, such as the ground.

TERMINAL NO.	WIRE COLOR	ITEM	CONDITION	DATA (DC Voltage and Pulse Signal)
54	P	Fuel pump temperature sensor	**[Engine is running]** ● **Warm-up condition**	Approximately 0.3 - 5.0V Output voltage varies with fuel pump temperature
64	G	Fuel pump temperature sensor ground	**[Engine is running]** ● **Warm-up condition** ● Idle speed	Approximately 0.3V

Diagnostic Procedure

BBS00435

1. CHECK GROUND CONNECTIONS

1. Turn ignition switch OFF.
2. Loosen and retighten ground screw on the body. Refer to EC-1703, "Ground Inspection" .

– Body ground (1)

– Priming pump (2)

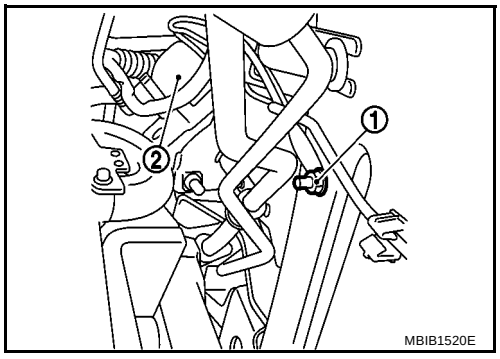

OK or NG

OK >> GO TO 2.

NG >> Repair or replace ground connections.

2. CHECK FUEL PUMP TEMPERATURE SENSOR POWER SUPPLY CIRCUIT

1. Disconnect fuel pump temperature sensor harness connector.
2. Turn ignition switch ON.
3. Check voltage between fuel pump temperature sensor terminal 1 and ground with CONSULT-II or tester.

Voltage: Approximately 5.0V

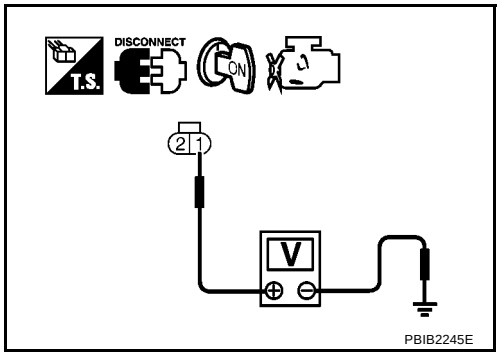

OK or NG

OK >> GO TO 3.

NG >> Repair harness or connectors.

3. CHECK FUEL PUMP TEMPERATURE SENSOR GROUND CIRCUIT FOR OPEN AND SHORT

1. Turn ignition switch OFF.
2. Disconnect ECM harness connector.
3. Check harness continuity between fuel pump temperature sensor terminal 2 and ECM terminal 64. Refer to Wiring Diagram.

   Continuity should exist.

4. Also check harness for short to ground and short to power.

OK or NG

OK >> GO TO 4.
NG >> Repair open circuit or short to ground or short to power in harness or connectors.

4. CHECK FUEL PUMP TEMPERATURE SENSOR

Refer to EC-1735, "Component Inspection" .

OK or NG

OK >> GO TO 5.
NG >> Replace fuel pump.

5. CHECK INTERMITTENT INCIDENT

Refer to EC-1697, "TROUBLE DIAGNOSIS FOR INTERMITTENT INCIDENT" .

>> **INSPECTION END**

Component Inspection

BBS004UO

FUEL PUMP TEMPERATURE SENSOR

1. Check resistance between fuel pump temperature sensor terminals 1 and 2 as shown in the figure.

   Resistance: 2.2 kΩ at 25°C (77°F)

2. If NG, replace fuel pump.

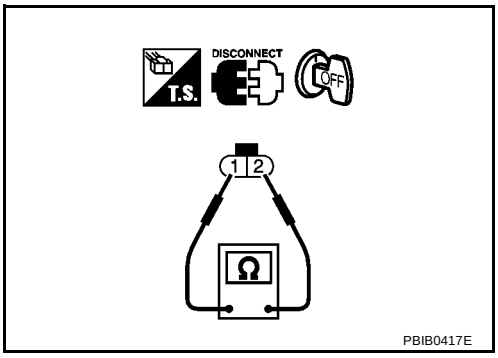

Removal and Installation

BBS00436

FUEL PUMP

Refer to EM-268, "HIGH PRESSURE PUMP" .

DTC P0190 FRP SENSOR

PFP:22693

CONSULT-II Reference Value in Data Monitor Mode

BBS00438

Specification data are reference values.

MONITOR	CONDITION		SPECIFICATOIN
RAIL PRESSURE	● Engine: After warming up ● Air conditioner switch: OFF ● Shift lever: Neutral position ● No load	Idle	Approximately 230 bar
		2,000 rpm	Approximately 450 bar
RAIL PRES SET	● Engine: After warming up ● Air conditioner switch: OFF ● Shift lever: Neutral position ● No load	Idle	Approximately 230 bar
		2,000 rpm	Approximately 450 bar

On Board Diagnosis Logic

BBS00439

DTC No.	Trouble diagnosis name	Possible cause
P0190	FUEL RAIL PRESSURE SENSOR CIRCUIT ● 1.DEF: Inconsistency ● 2.DEF: Below minimum threshold ● 3.DEF: Above maximum threshold ● 4.DEF: Value outside of tolerance ● CC.0: Short circuit to ground ● CO.1: Short circuit to +12V or open circuit	● Harness or connectors (The sensor circuit is open or shorted.) ● Fuel rail pressure sensor

NOTE:

- **If DTC P0190 is displayed with DTC P0641, first perform trouble diagnosis for DTC P0641. Refer to** **EC-1830, "DTC P0641 SENSOR POWER SUPPLY"** **.**
- **Conditions for applying the diagnostic procedure to the stored DTCs:**
  The DTC is declared present after the engine started.
- **Special notes:**
  - If this DTC is present, engine stops and is impossible to restarted.
  - **Malfunction indicator (Red) lights up.**

Wiring Diagram

BBS0043B

EC-FRPS-01

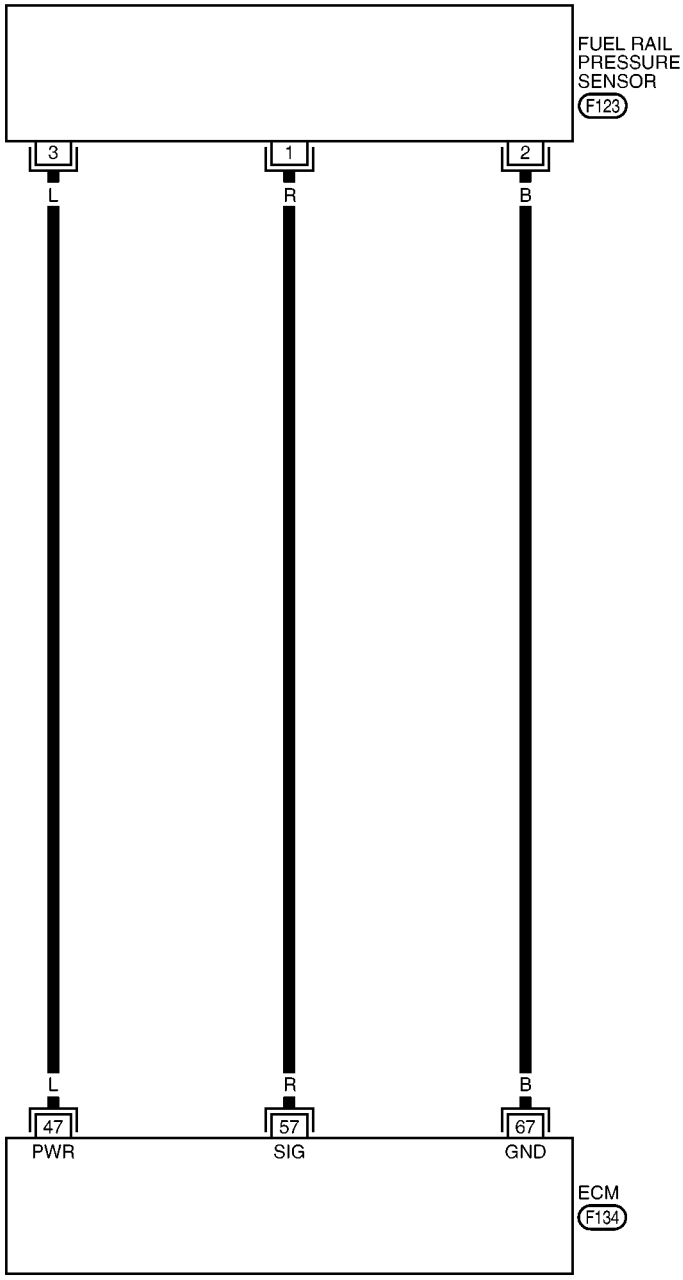

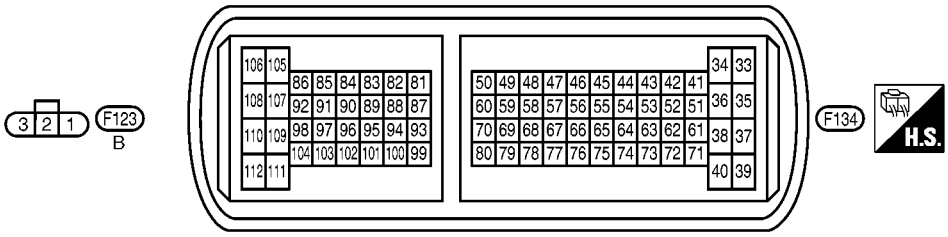

MBWA1551E

Specification data are reference values and are measured between each terminal and ground.

CAUTION:

Do not use ECM ground terminals when measuring input/output voltage. Doing so may result in damage to the ECM's transistor. Use a ground other than ECM terminals, such as the ground.

TERMINAL NO.	WIRE COLOR	ITEM	CONDITION	DATA (DC Voltage)
47	L	Sensor power supply (Fuel rail pressure sensor)	**[Ignition switch ON]**	Approximately 5.0V
57	R	Fuel rail pressure sensor	**[Engine is running]** ● **Warm-up condition** ● Idle speed	Approximately 1.0V
			[Engine is running] ● **Warm-up condition** ● Engine speed is 2,000 rpm	Approximately 1.5V
67	B	Sensor ground (Fuel rail pressure sensor)	**[Engine is running]** ● **Warm-up condition** ● Idle speed	Approximately 0.45V

Diagnostic Procedure

BBS0043C

1. CHECK GROUND CONNECTION

1. Turn ignition switch OFF.
2. Loosen and retighten ground screw on the body. Refer to EC-1703, "Ground Inspection" .

– Body ground (1)

– Priming pump (2)

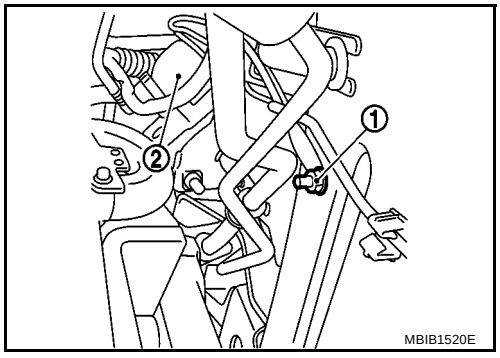

OK or NG

OK >> GO TO 2.

NG >> Repair or replace ground connections.

2. CHECK FUEL RAIL PRESSURE SENSOR POWER SUPPLY CIRCUIT

1. Disconnect fuel rail pressure sensor harness connector.
2. Turn ignition switch ON.
3. Check voltage between fuel rail pressure sensor terminal 3 ground with CONSULT-II or tester.

Voltage: Approximately 5.0V

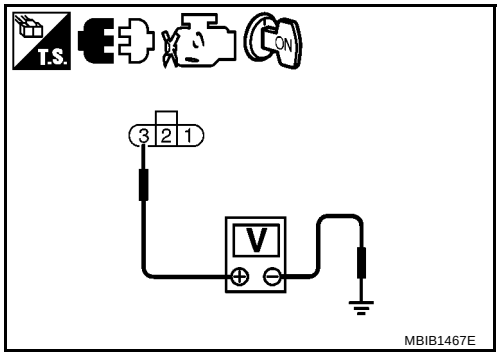

OK or NG

OK >> GO TO 3.

NG >> Repair open circuit or short to ground or short to power in harness or connectors.

3. CHECK FUEL RAIL PRESSURE SENSOR GROUND CIRCUIT FOR OPEN AND SHORT

1. Turn ignition switch OFF.
2. Disconnect ECM harness connector.
3. Check harness continuity between fuel rail pressure sensor terminal 2 and ECM terminal 67. Refer to Wiring Diagram.

Continuity should exist.

4. Also check harness for short to ground and short to power.

OK or NG

OK >> GO TO 4.
NG >> Repair open circuit or short to ground or short to power in harness or connectors.

4. CHECK FUEL RAIL PRESSURE SENSOR INPUT SIGNAL CIRCUIT FOR OPEN AND SHORT

1. Check harness continuity between ECM terminal 57 and fuel rail pressure sensor terminal 1. Refer to Wiring Diagram.

Continuity should exist.

2. Also check harness for short to ground and short to power.

OK or NG

OK >> GO TO 4.
NG >> Repair open circuit or short to ground or short to power in harness connectors.

5. CHECK FUEL RAIL PRESSURE SENSOR

Refer to EC-1739, "Component Inspection" .

OK or NG

OK >> GO TO 6.
NG >> Replace fuel rail.

6. CHECK INTERMITTENT INCIDENT

Refer to EC-1697, "TROUBLE DIAGNOSIS FOR INTERMITTENT INCIDENT" .

>> **INSPECTION END**

Component Inspection

BBS0043D

FUEL RAIL PRESSURE SENSOR

1. Reconnect harness connector disconnected.
2. Start engine and warm it up to normal operating temperature.
3. Check voltage between ECM terminal 57 (Fuel rail pressure sensor signal) and ground under the following conditions.

Condition	Voltage V
Idle	Approximately 1.0
2,000 rpm	Approximately 1.5

4. If the voltage is out of specification, disconnect fuel rail pressure sensor harness connector and connect it again. Then repeat above check.
5. If NG, replace fuel rail.

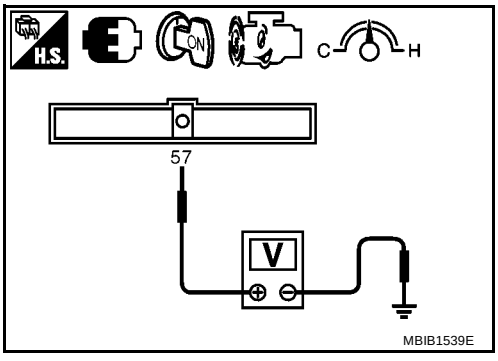

Removal and Installation

BBS0043E

FUEL RAIL

Refer to EM-267, "INJECTOR RAIL" .

DTC P0200 FUEL INJECTOR

PFP:16600

Component Description

BBS004UP

The fuel injector is a small, precise solenoid valve. When the ECM supplies a ground to the fuel injector circuit, the coil in the fuel injector is energized. The energized coil pulls the needle valve back and allows fuel to flow through the fuel injector into the cylinder. The amount of fuel injected depends upon the injection pulse duration. Pulse duration is the length of time the fuel injector remains open. The ECM controls the injection pulse duration based on engine fuel needs.

CONSULT-II Reference Value in Data Monitor Mode

BBS004UQ

Specification data are reference values.

MONITOR ITEM	CONDITION		SPECIFICATION
FUEL FLOW	● Engine: After warming up ● Air conditioner switch: OFF ● Shift lever: Neutral position ● No load	Idle	Approximately 4.9 mg/cp
		2,000 rpm	Approximately 3.5 mg/cp

On Board Diagnosis Logic

BBS0043F

DTC No.	Trouble diagnosis name	Possible cause
P0200	FUEL INJECTOR CIRCUIT ● CC.0: Short circuit to ground ● CC.1: Short circuit to +12V	● Harness or connectors (The fuel injector circuit is shorted.) ● Fuel injector

NOTE:

- **If DTC P0200 is displayed with DTC P0201, P0202, P0203, P0204, first perform trouble diagnosis for other DTC. Refer to** **EC-1745, "DTC P0201 - P0204 FUEL INJECTOR"** **.**
- **Conditions for applying the diagnostic procedure to the stored DTCs:**
  The DTC is declared present with engine running.
- **Special notes:**
  - If this DTC is present, the engine stops.
  - **Malfunction indicator (Red) lights up.**

Wiring Diagram

BBS004TT

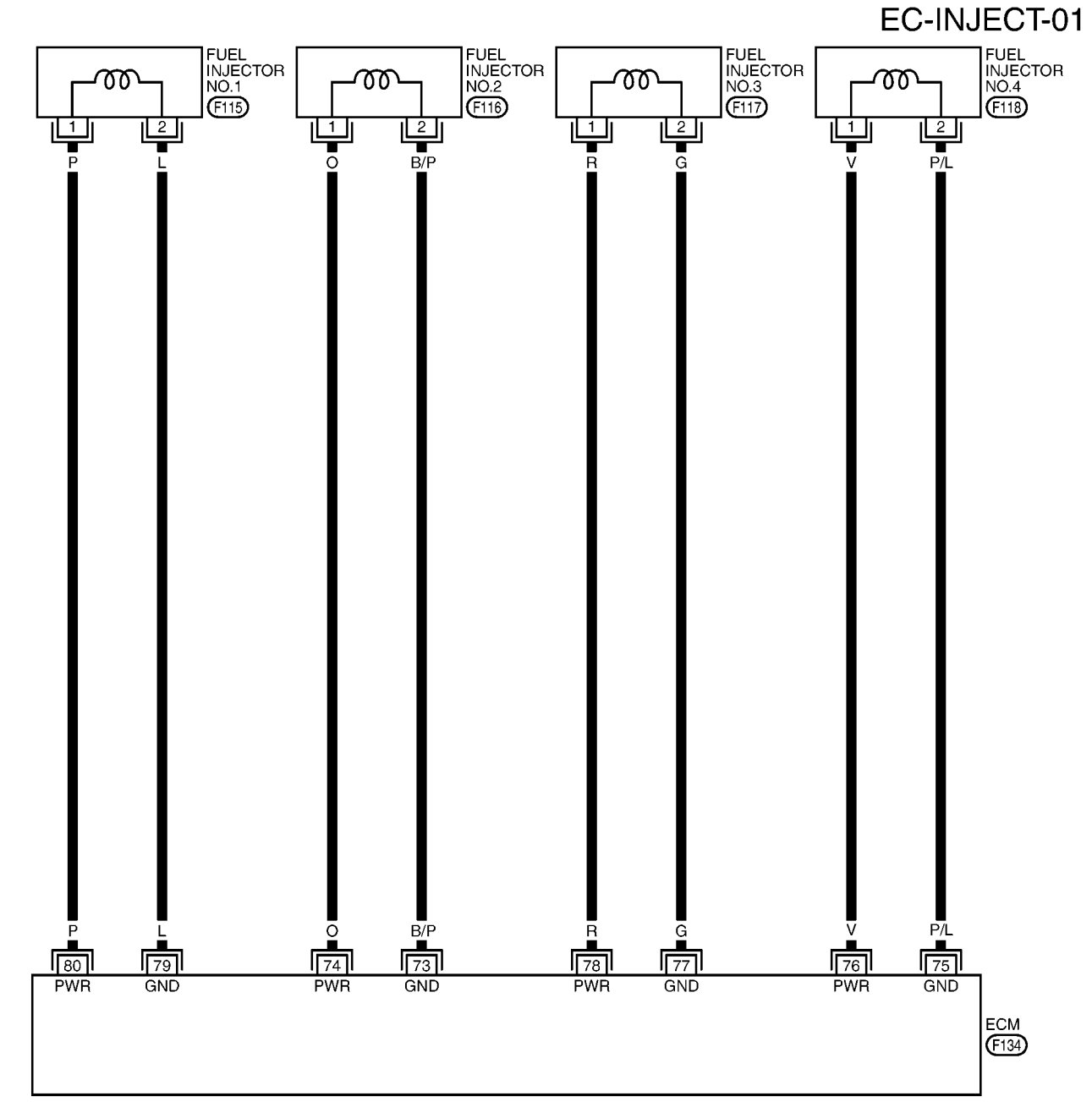

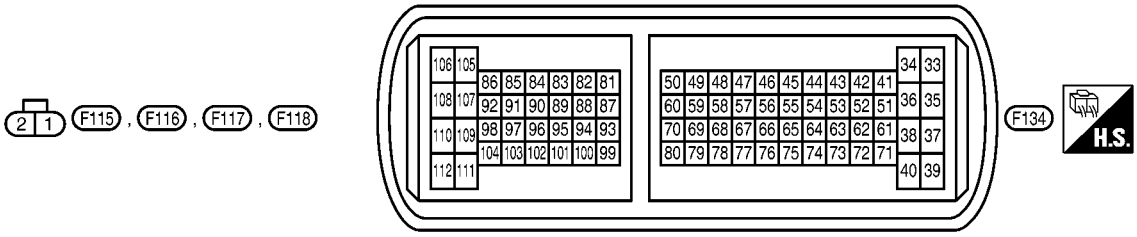

MBWA1553E

Specification data are reference values and are measured between each terminal and ground.
Pulse signal is measured by CONSULT-II.

CAUTION:

Do not use ECM ground terminals when measuring input/output voltage. Doing so may result in damage to the ECM's transistor. Use a ground other than ECM terminals, such as the ground.

TERMINAL NO.	WIRE COLOR	ITEM	CONDITION	DATA (DC Voltage and Pulse Signal)
73 75 77 79	B/P P/L G L	Fuel injector No. 2 Fuel injector No. 4 Fuel injector No. 3 Fuel injector No. 1	**[Engine is running]** ● **Warm-up condition** ● Idle speed **NOTE:** The pulse cycle changes depending on rpm at idle.	0 - 9V ★ 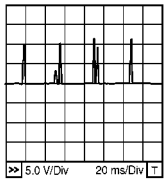 MBIB1512E
			[Engine is running] ● **Warm-up condition** ● Engine speed: 2,000 rpm	0 - 9V ★ 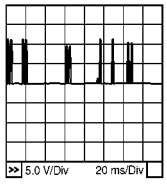 MBIB1513E
74 76 78 80	O V R P	Fuel injector power supply No. 2 Fuel injector power supply No. 4 Fuel injector power supply No. 3 Fuel injector power supply No. 1	**[Engine is running]** ● **Warm-up condition** ● Idle speed **NOTE:** The pulse cycle changes depending on rpm at idle.	5 - 10V ★ 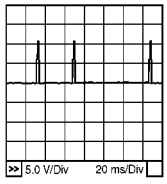 MBIB1514E
			[Engine is running] ● **Warm-up condition** ● Engine speed: 2,000 rpm	5 - 10V ★ 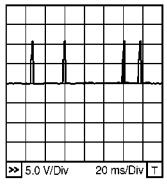 MBIB1515E

★: Average voltage for pulse signal (Actual pulse signal can be confirmed by oscilloscope.)

Diagnostic Procedure

BBS0043H

1. CHECK FUEL INJECTOR POWER SUPPLY FOR OPEN AND SHORT CIRCUIT

1. Turn ignition switch OFF.
2. Disconnect fuel injector (1) harness connector.
3. Disconnect ECM harness connector.
4. Check harness continuity between the following terminals. Refer to Wiring Diagram.

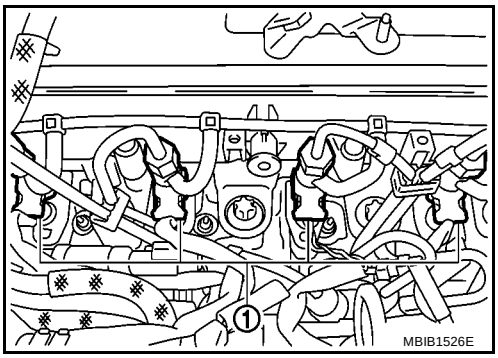

Terminal		Cylinder
ECM	Fuel injector	
74	1	No.2
76	1	No.4
78	1	No.3
80	1	No.1

Continuity should exist.

5. Also check harness for short to ground and short to power.

OK or NG

OK >> GO TO 2.
NG >> Repair open circuit or short to ground or short to power in harness or connectors.

2. CHECK FUEL INJECOR OUTPUT SIGNAL CIRCUIT FOR OPEN AND SHORT

1. Check harness continuity between the following terminals. Refer to Wiring Diagram.

Terminal		Cylinder
ECM	Fuel injector	
73	2	No.2
75	2	No.4
77	2	No.3
79	2	No.1

Continuity should exist.

2. Also check harness for short to ground and short to power.

OK or NG

OK >> GO TO 3.
NG >> Repair open circuit or short to ground or short to power in harness or connectors.

3. CHECK INTERMITTENT INCIDENT

Refer to EC-1697, "TROUBLE DIAGNOSIS FOR INTERMITTENT INCIDENT" .

OK or NG

OK >> GO TO 4.
NG >> Repair or open circuit or short to ground or short to power in harness or connectors.

4. REPLACE FUEL INJECOR

1. Replace fuel injector of malfunctioning cylinder.
2. Perform Injector Adjustment Value Registration. Refer to EC-1625, "Injector Adjustment Value Registration" .

>> **INSPECTION END**

Removal and Installation

BBS004TV

FUEL INJECTOR

Refer to EM-266, "FUEL INJECTOR" .

DTC P0201 - P0204 FUEL INJECTOR

PFP:16600

Component Description

BBS0043I

The fuel injector is a small, precise solenoid valve. When the ECM supplies a ground to the fuel injector circuit, the coil in the fuel injector is energized. The energized coil pulls the needle valve back and allows fuel to flow through the fuel injector into the cylinder. The amount of fuel injected depends upon the injection pulse duration. Pulse duration is the length of time the fuel injector remains open. The ECM controls the injection pulse duration based on engine fuel needs.

CONSULT-II Reference Value in Data Monitor Mode

BBS0043J

Specification data are reference values.

MONITOR ITEM	CONDITION		SPECIFICATION
FUEL FLOW	● Engine: After warming up ● Air conditioner switch: OFF ● Shift lever: Neutral position ● No load	Idle	Approximately 4.9 mg/cp
		2,000 rpm	Approximately 3.5 mg/cp

On Board Diagnosis Logic

BBS0043K

DTC No.	Trouble diagnosis name	Possible cause
P0201	NO. 1 CYLINDER FUEL INJECTOR CIRCUIT ● CO: Open circuit ● CC: Short circuit ● 1.DEF: At minimum stop ● 2.DEF: At maximum stop	● Harness or connectors (The fuel injector circuit is open.) ● Fuel injector
P0202	NO. 2 CYLINDER FUEL INJECTOR CIRCUIT ● CO: Open circuit ● CC: Short circuit ● 1.DEF: At minimum stop ● 2.DEF: At maximum stop	
P0203	NO. 3 CYLINDER FUEL INJECTOR CIRCUIT ● CO: Open circuit ● CC: Short circuit ● 1.DEF: At minimum stop ● 2.DEF: At maximum stop	
P0204	NO. 4 CYLINDER FUEL INJECTOR CIRCUIT ● CO: Open circuit ● CC: Short circuit ● 1.DEF: At minimum stop ● 2.DEF: At maximum stop	

NOTE:

- **Conditions for applying the diagnostic procedure to the stored DTCs:**
  The DTC is declared present with engine running.
- **Special notes:**
  - If this DTC is present, the idle speed is stuck at 1,000 rpm with engine noise, unstable engine speed, reduced engine performance.
  - **Malfunction indicator (Red) lights up.**
  - **Malfunction indicator (Yellow) lights up.**

Wiring Diagram

BBS0043M

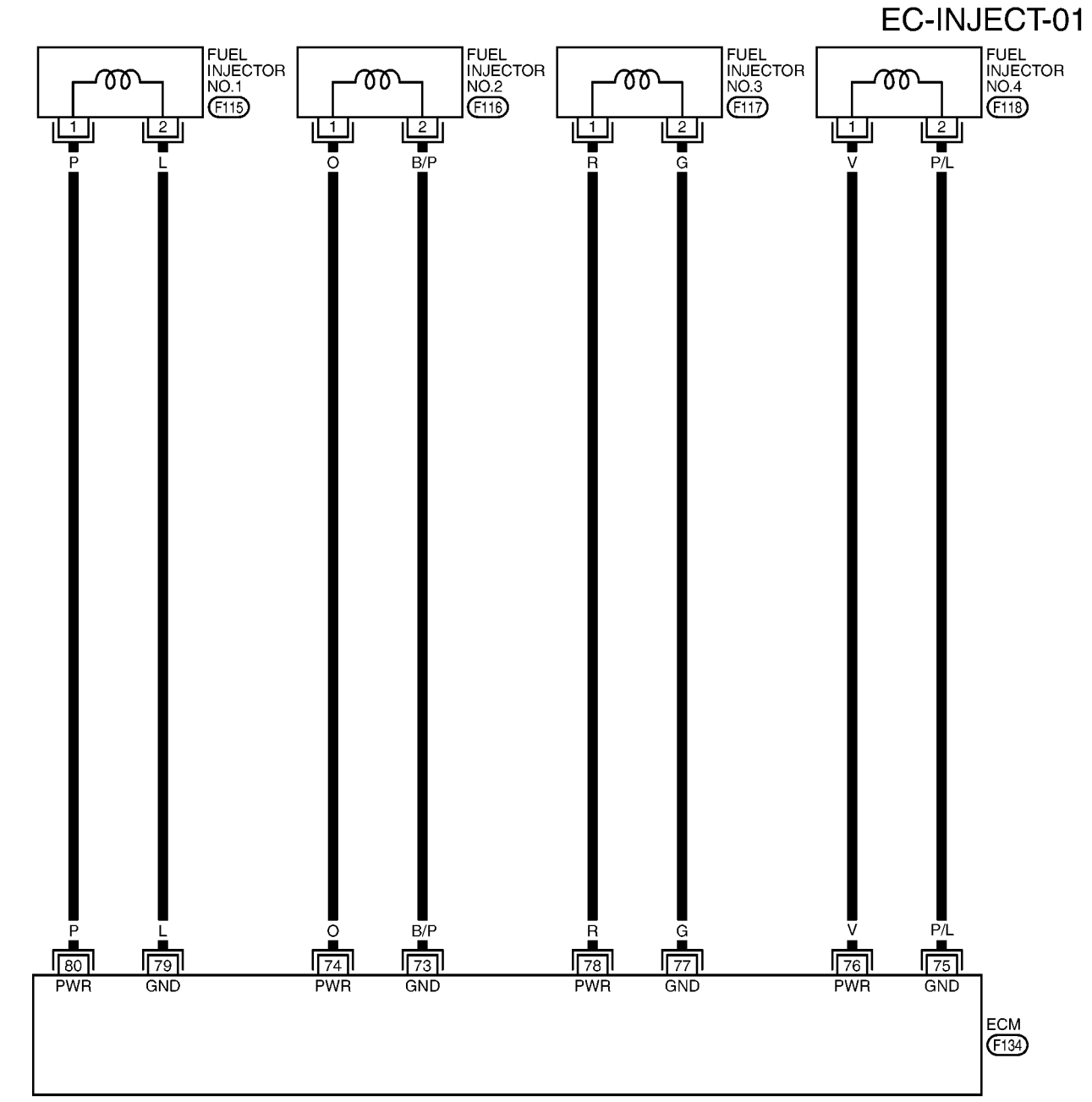

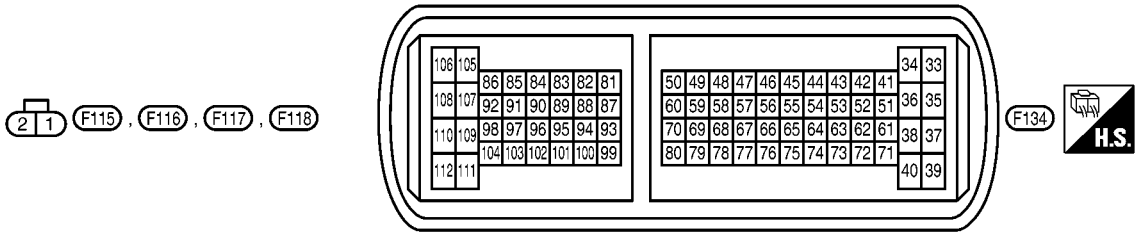

MBWA1553E

Specification data are reference values and are measured between each terminal and ground.
Pulse signal is measured by CONSULT-II.

CAUTION:
Do not use ECM ground terminals when measuring input/output voltage. Doing so may result in damage to the ECM's transistor. Use a ground other than ECM terminals, such as the ground.

TERMINAL NO.	WIRE COLOR	ITEM	CONDITION	DATA (DC Voltage and Pulse Signal)
73 75 77 79	B/P P/L G L	Fuel injector No. 2 Fuel injector No. 4 Fuel injector No. 3 Fuel injector No. 1	**[Engine is running]** ● **Warm-up condition** ● Idle speed **NOTE:** The pulse cycle changes depending on rpm at idle.	0 - 9V ★ 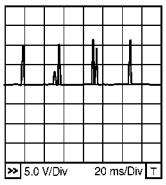 MBIB1512E
			[Engine is running] ● **Warm-up condition** ● Engine speed: 2,000 rpm	0 - 9V ★ 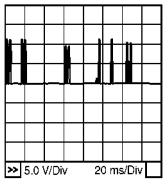 MBIB1513E
74 76 78 80	O V R P	Fuel injector power supply No. 2 Fuel injector power supply No. 4 Fuel injector power supply No. 3 Fuel injector power supply No. 1	**[Engine is running]** ● **Warm-up condition** ● Idle speed **NOTE:** The pulse cycle changes depending on rpm at idle.	5 - 10V ★ 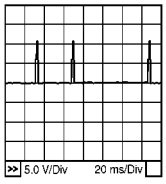 MBIB1514E
			[Engine is running] ● **Warm-up condition** ● Engine speed: 2,000 rpm	5 - 10V ★ 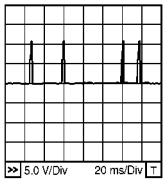 MBIB1515E

★: Average voltage for pulse signal (Actual pulse signal can be confirmed by oscilloscope.)

Diagnostic Procedure

BBS0043N

1. CHECK DTC

Make sure that which malfunction (DTC second line indication) is displayed.

A	CO or CC
B	1.DEF or 2.DEF

A or B

A >> GO TO 2.
B >> GO TO 5.

2. CHECK FUEL INJECTOR POWER SUPPLY FOR OPEN AND SHORT CIRCUIT

1. Turn ignition switch OFF.
2. Disconnect fuel injector (1) harness connector.
3. Disconnect ECM harness connector.
4. Check harness continuity between the following terminals corresponding to the malfunctioning cylinder.
   Refer to Wiring Diagram.

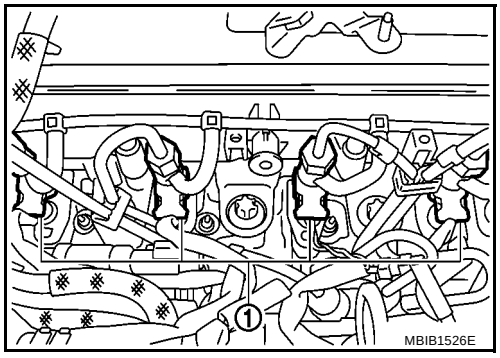

DTC	Terminal		Cylinder
	ECM	Fuel injector	
P0201	80	1	No.1
P0202	74	1	No.2
P0203	78	1	No.3
P0204	76	1	No.4

Continuity should exist.

5. Also check harness for short to ground and short to power.

OK or NG

OK >> GO TO 3.
NG >> Repair open circuit or short to ground or short to power in harness or connectors.

3. CHECK FUEL INJECOR OUTPUT SIGNAL CIRCUIT FOR OPEN AND SHORT

1. Check harness continuity between the following terminals corresponding to the malfunctioning cylinder. Refer to Wiring Diagram.

DTC	Terminal		Cylinder
	ECM	Fuel injector	
P0201	79	2	No.1
P0202	73	2	No.2
P0203	77	2	No.3
P0204	75	2	No.4

Continuity should exist.

2. Also check harness for short to ground and short to power.

OK or NG

OK >> GO TO 4.
NG >> Repair open circuit or short to ground or short to power in harness or connectors.

4. CHECK FUEL INJECTOR CIRCUIT FOR SHORT

Check harness continuity between the following terminals corresponding to the malfunctioning cylinder. Refer to Wiring Diagram.

DTC	Terminal		Cylinder
	Fuel injector	ECM	
P0201	2	Except 79	No.1
	1	Except 80	
P0202	2	Except 73	No.2
	1	Except 74	
P0203	2	Except 77	No.3
	1	Except 78	
P0204	2	Except 75	No.4
	1	Except 76	

Continuity should not exist.

OK or NG

OK >> GO TO 8.
NG >> Repair circuit short in harness or connectors.

5. CHECK INJECTOR ADJUSTMENT VALUE

Make sure that all injector adjustment values are registered correctly.
Refer to EC-1625, "Injector Adjustment Value Registration" .

OK or NG

OK >> GO TO 6.
NG >> Perform Injector Adjustment Value Registration. Refer to EC-1625, "Injector Adjustment Value Registration" .

6. CHECK KNOCK SENSOR SHIELD CIRCUIT FOR OPEN AND SHORT

Check knock sensor shield circuit for open and short.
Refer to EC-1771, "Wiring Diagram" .

OK or NG

OK >> GO TO 7.
NG >> Repair open circuit or short to ground or short to power in harness or connectors.

7. CHECK KNOCK SENSOR INSTALLATION

Check that knock sensor is installed securely on the engine.
Refer to EM-282, "OVERHAUL" .

OK or NG

OK >> GO TO 8.
NG >> Repair open circuit or short to ground or short to power in harness or connectors.

8. CHECK INTERMITTENT INCIDENT

Refer to EC-1697, "TROUBLE DIAGNOSIS FOR INTERMITTENT INCIDENT" .

OK or NG

OK >> GO TO 9.
NG >> Repair open circuit or short to ground or short to power in harness or connectors.

9. REPLACE FUEL INJECOR

1. Replace fuel injector of malfunctioning cylinder.
2. Perform Injector Adjustment Value Registration. Refer to EC-1625, "Injector Adjustment Value Registration" .

>> **INSPECTION END**

Component Inspection

BBS0043O

FUEL INJECTOR

1. Disconnect fuel injector harness connector.
2. Check resistance between terminals as shown in the figure.

   Continuity should exist.

3. If NG, replace fuel injector.

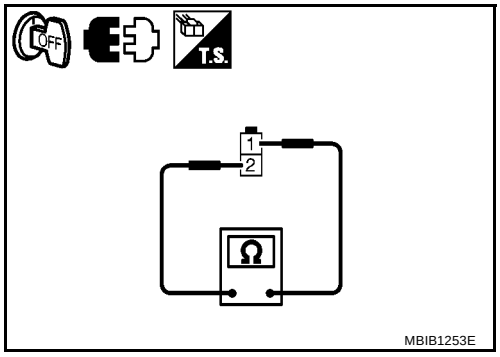

Removal and Installation

BBS0043P

FUEL INJECTOR

Refer to EM-266, "FUEL INJECTOR" .

DTC P0225 APP SENSOR

PFP:22693

Description

BBS0043Q

The accelerator pedal position sensor is installed on the upper end of the accelerator pedal assembly. The sensors detect the accelerator pedal position and sends a signal to the ECM. The ECM uses the signal to determine the amount of fuel to be injected.

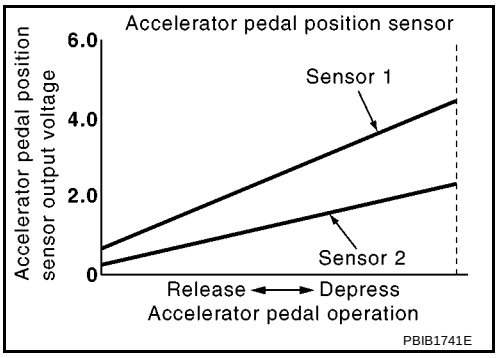

CONSULT-II Reference Value in Data Monitor Mode

BBS0043R

Specification data are reference values.

MONITOR ITEM	CONDITION		SPECIFICATION
PL PTNMR T1 V	● Ignition switch: ON (Engine stopped)	Accelerator pedal: Fully released	Approximately 15 %
PL PTNMR T2 V	● Ignition switch: ON (Engine stopped)	Accelerator pedal: Fully released	Approximately 6 %

On Board Diagnosis Logic

BBS0043S

DTC No.	Trouble diagnosis name	Possible cause
P0225	APP SENSOR 1 CIRCUIT ● CO.0: Open circuit or short circuit to ground ● CC.1: Short circuit to +12V ● 1.DEF: Inconsistency between APP sensors 1 and 2 ● 2.DEF: No signal ● 3.DEF: Blocked component	● Harness or connectors (The APP sensor 1 circuit is open or shorted.) ● Accelerator pedal position sensor (Accelerator pedal position sensor 1)

NOTE:

- **If DTC P0225 is displayed with DTC P0641, first perform trouble diagnosis for DTC P0641. Refer to** **EC-1830, "DTC P0641 SENSOR POWER SUPPLY"** **.**
- **Special notes:**
  - If this DTC is present, the engine speed is maintained above 1,000 rpm, the engine performance is reduced, and **malfuction indicator (Red) lights up.**
  - If this DTC is present with DTC P2120, the engine speed is fixed at 1,800 rpm, the engine performance is reduced, and **malfuction indicator (Red) lights up.**

Wiring Diagram
LHD MODELS

BBS0043U

EC-APPS-01

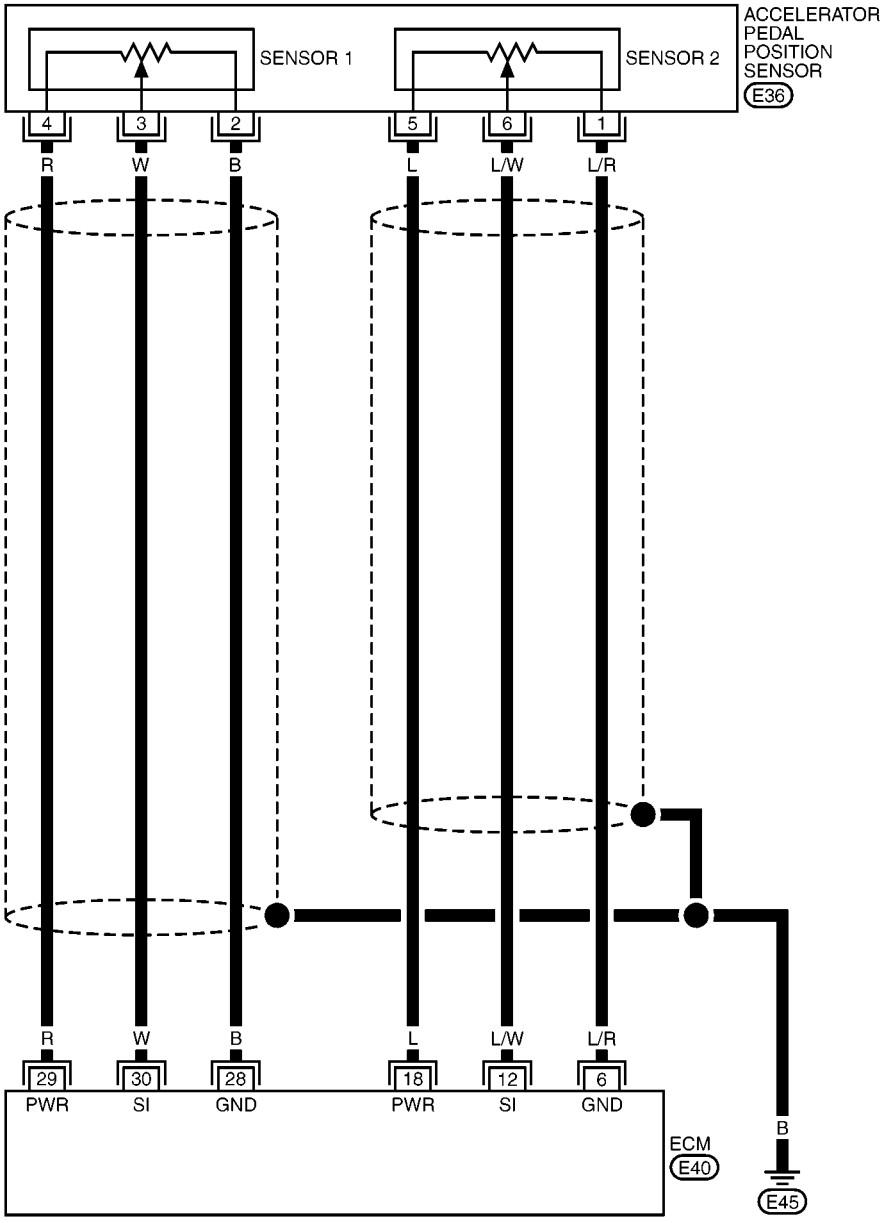

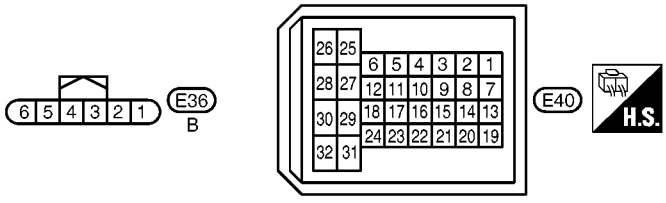

MBWA1554E

Specification data are reference values and are measured between each terminal and ground.

CAUTION:

Do not use ECM ground terminals when measuring input/output voltage. Doing so may result in damage to the ECM's transistor. Use a ground other than ECM terminals, such as the ground.

TERMINAL NO.	WIRE COLOR	ITEM	CONDITION	DATA (DC Voltage and Pulse Signal)
6	L/R	Sensor ground (Accelerator pedal position sensor 2)	**[Engine is running]** ● **Warm-up condition** ● Idle speed	Approximately 0.3V
12	L/W	Accelerator pedal position sensor 2	**[Ignition switch ON]** ● Engine stopped ● Accelerator pedal: Fully released	Approximately 0.4V
			[Ignition switch ON] ● Engine stopped ● Accelerator pedal: Fully depressed	Approximately 2.0V
18	L	Sensor power supply (Accelerator pedal position sensor 2)	**[Ignition switch ON]**	Approximately 4.6V
28	B	Sensor ground (Accelerator pedal position sensor 1)	**[Engine is running]** ● **Warm-up condition** ● Idle speed	Approximately 0.24V
29	R	Sensor power supply (Accelerator pedal position sensor 1)	**[Ignition switch ON]**	Approximately 5.0V
30	W	Accelerator pedal position sensor 1	**[Ignition switch ON]** ● Engine stopped ● Accelerator pedal: Fully released	Approximately 0.76V
			[Ignition switch ON] ● Engine stopped ● Accelerator pedal: Fully depressed	Approximately 4.2V

RHD MODELS

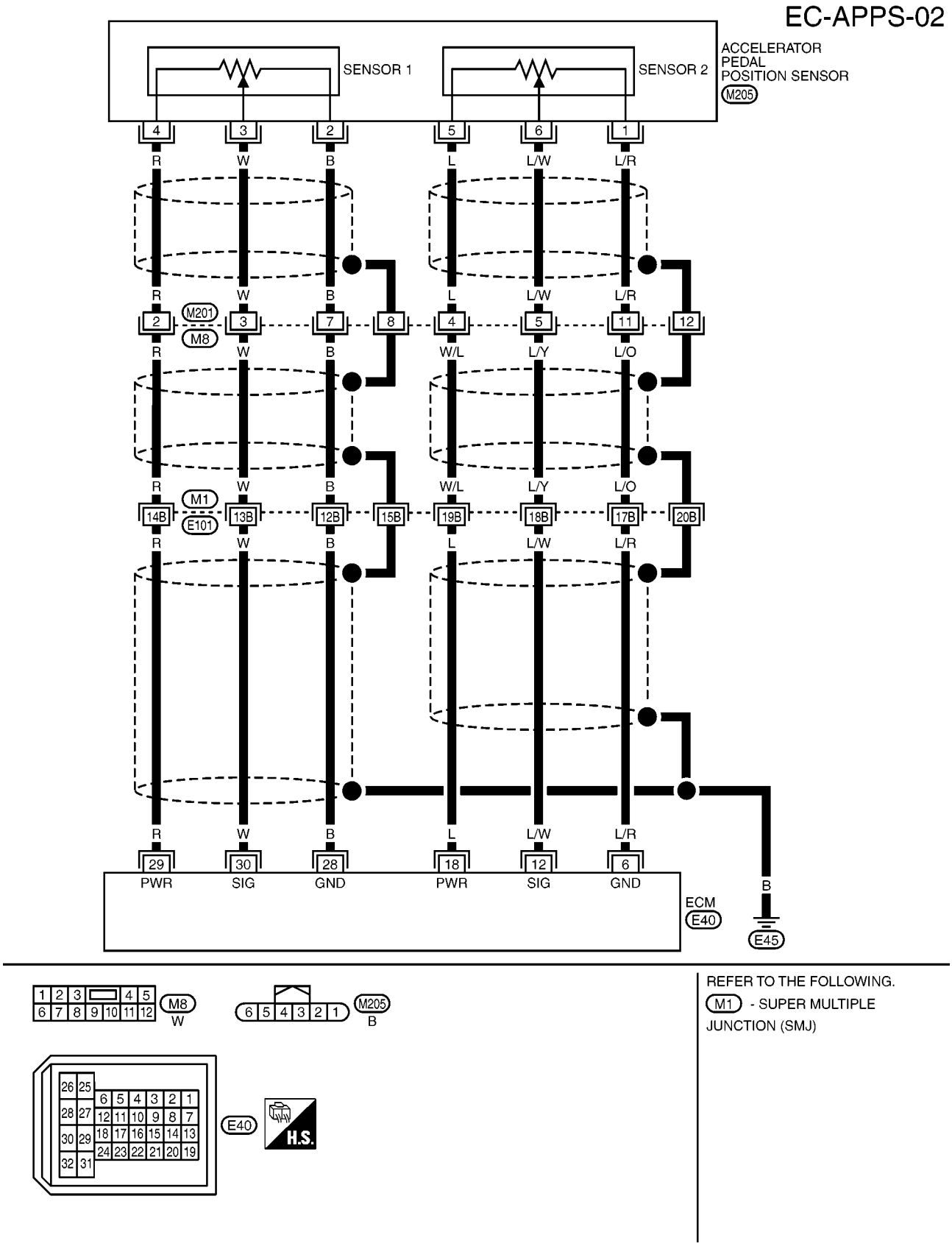
EC-APPS-02
SENSOR 1
SENSOR 2
ACCELERATOR PEDAL POSITION SENSOR
M205
4 3 2 5 6 1
R W B L L/W L/R
M201
M8
2 3 7 8 4 5 11 12
W/L L/Y L/O
M1
E101
14B 13B 12B 15B 19B 18B 17B 20B
29 30 28 18 12 6
PWR SIG GND PWR SIG GND
ECM
E40
B
E45
M8
W
M205
B
E40
H.S.
REFER TO THE FOLLOWING.
M1 - SUPER MULTIPLE JUNCTION (SMJ)
MBWA1555E

Specification data are reference values and are measured between each terminal and ground.

CAUTION:
Do not use ECM ground terminals when measuring input/output voltage. Doing so may result in damage to the ECM's transistor. Use a ground other than ECM terminals, such as the ground.

TERMINAL NO.	WIRE COLOR	ITEM	CONDITION	DATA (DC Voltage and Pulse Signal)
6	L/R	Sensor ground (Accelerator pedal position sensor 2)	**[Engine is running]** ● **Warm-up condition** ● Idle speed	Approximately 0.3V
12	L/W	Accelerator pedal position sensor 2	**[Ignition switch ON]** ● Engine stopped ● Accelerator pedal: Fully released	Approximately 0.4V
			[Ignition switch ON] ● Engine stopped ● Accelerator pedal: Fully depressed	Approximately 2.0V
18	L	Sensor power supply (Accelerator pedal position sensor 2)	**[Ignition switch ON]**	Approximately 4.6V
28	B	Sensor ground (Accelerator pedal position sensor 1)	**[Engine is running]** ● **Warm-up condition** ● Idle speed	Approximately 0.24V
29	R	Sensor power supply (Accelerator pedal position sensor 1)	**[Ignition switch ON]**	Approximately 5.0V
30	W	Accelerator pedal position sensor 1	**[Ignition switch ON]** ● Engine stopped ● Accelerator pedal: Fully released	Approximately 0.76V
			[Ignition switch ON] ● Engine stopped ● Accelerator pedal: Fully depressed	Approximately 4.2V

Diagnostic Procedure

BBS0043V

1. CHCEK GROUND CONNECTIONS

1. Turn ignition switch OFF.
2. Loosen and retighten ground screw on the body.
   Refer to EC-1703, "Ground Inspection" .

– Body ground (1)
– Priming pump (2)

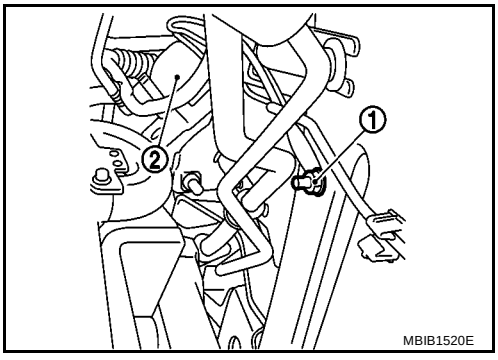

OK or NG

OK >> GO TO 2.
NG >> Repair or replace ground connections.

2. CHECK APP SENSOR 1 POWER SUPPLY CIRCUIT

1. Disconnect accelerator pedal position (APP) sensor harness connector (1).
- Accelerator pedal position sensor (2)
- Accelerator pedal (3)
2. Turn ignition switch ON.

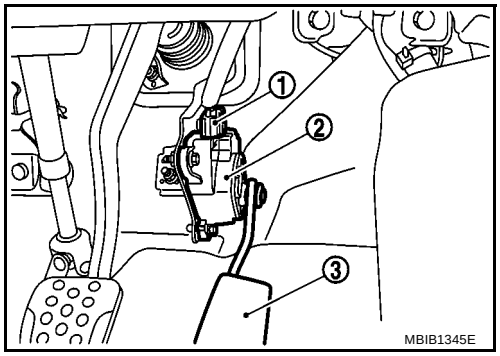

3. Check voltage between APP sensor terminal 4 and ground with CONSULT-II or tester.

Voltage: Approximately 5.3V

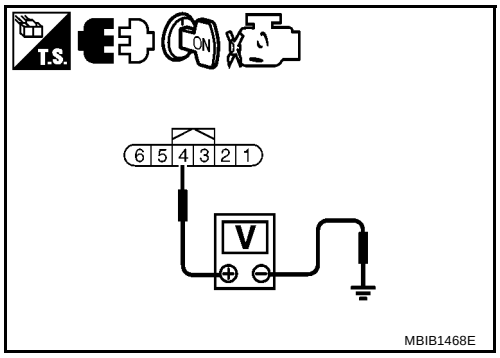

OK or NG

OK >> GO TO 4.
NG >> GO TO 3.

3. DETECT MALFUNCTIONING PART

Check the following.
- Harness connectors M201, M8 (RHD models)
- Harness connectors M1, E101 (RHD models)
- Harness for open or short between APP sensor and ECM

>> Repair open circuit or short to ground or short to power in harness or connectors.

4. CHECK APP SENSOR 1 GROUND CIRCUIT FOR OPEN AND SHORT

1. Turn ignition switch OFF.
2. Disconnect ECM harness connector.
3. Check harness continuity between APP sensor terminal 2 and ECM terminal 28.
   Refer to Wiring Diagram.

Continuity should exist.

4. Also check harness for short to ground and short to power.

OK or NG

OK >> GO TO 6.
NG >> GO TO 5.

5. DETECT MALFUNCTIONING PART

Check the following.
- Harness connectors M201, M8 (RHD models)
- Harness connectors M1, E101 (RHD models)
- Harness for open or short between APP sensor and ECM

>> Repair open circuit or short to ground or short to power in harness or connectors.

6. CHECK APP SENSOR 1 INPUT SIGNAL CIRCUIT FOR OPEN AND SHORT

1. Check harness continuity between ECM terminal 30 and APP sensor terminal 3.
   Refer to Wiring Diagram.

   Continuity should exist.

2. Also check harness for short to ground and short to power.

OK or NG

OK >> GO TO 8.
NG >> GO TO 7.

7. DETECT MALFUNCTIONING PART

Check the following.

- Harness connectors M201, M8 (RHD models)
- Harness connectors M1, E101 (RHD models)
- Harness for open or short between APP sensor and ECM

>> Repair open circuit or short to ground or short to power in harness or connectors.

8. CHECK APP SENSOR

Refer to EC-1757, "Component Inspection" .

OK or NG

OK >> GO TO 9.
NG >> Replace accelerator pedal assembly.

9. CHECK INTERMITTENT INCIDENT

Refer to EC-1697, "TROUBLE DIAGNOSIS FOR INTERMITTENT INCIDENT" .

>> **INSPECTION END**

Component Inspection

BBS0043W

ACCELERATOR PEDAL POSITION SENSOR

1. Disconnect APP sensor harness connector (1).
   - Accelerator pedal position sensor (2)
   - Accelerator pedal (3)

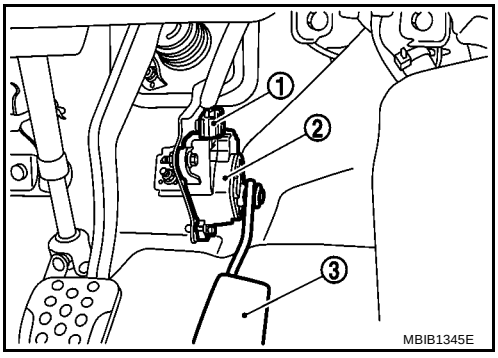

2. Check resistance between the APP sensor terminals 2 and 4, 1 and 5.

Terminals	Resistance
2 and 4:	1.7 ± 0.9 kΩ
1 and 5:	2.4 ± 1.2 kΩ

3. If NG, replace accelerator pedal assembly.

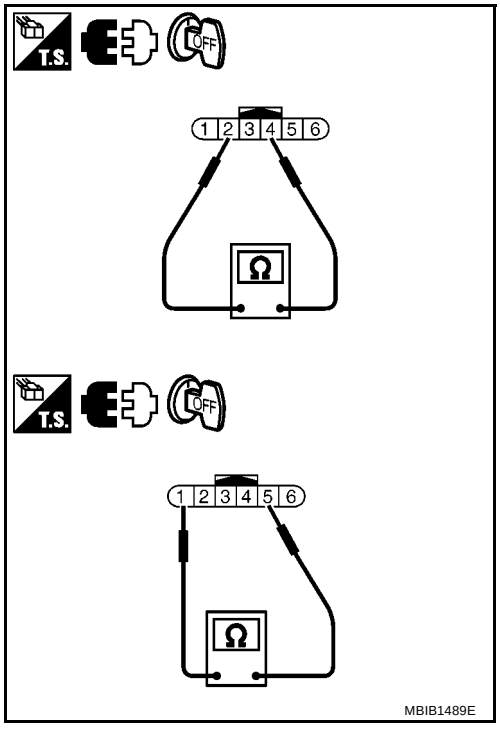

BBS0043X

Removal and Installation

ACCELERATOR PEDAL

Refer to ACC-2, "ACCELERATOR CONTROL SYSTEM" .

DTC P0231 FUEL PUMP

PFP:22693

Description

BBS0043Y

To control the amount of the fuel inhalation of the fuel pump, a plunger is built into the fuel pump. When the amount of the fuel inhalation of fuel increases, the fuel pump raises the fuel exhalation pressure. As a result, the fuel injection pressure is raised. When the load of the engine increases, the ECM sends a signal to the fuel pump to raise the injection pressure.

CONSULT-II Reference Value in Data Monitor Mode

BBS0043Z

Specification data are reference values.

MONITOR ITEM	CONDITION		SPECIFICATION
FUEL FLOW	● Engine: After warming up ● Air conditioner switch: OFF ● Shift lever: Neutral position ● No load	Idle	Approximately 4.9 mg/cp
		2,000 rpm	Approximately 3.5 mg/cp

On Board Diagnosis Logic

BBS00440

DTC No.	Trouble diagnosis name	Possible cause
P0231	FUEL PUMP CONTROL CIRCUIT ● CO.0: Open circuit or short circuit to ground ● CC.1: Short circuit to +12V	● Harness or connectors (The fuel pump circuit is open or shorted.) ● Fuel pump

NOTE:

- **Special notes:**
  - If this DTC is present, the fuel pump is fully opened and the engine is stopped to prevent it from revving.
  - **Malfuction indicator (Red) lights up.**

Wiring Diagram

BBS00442

EC-F/PUMP-01

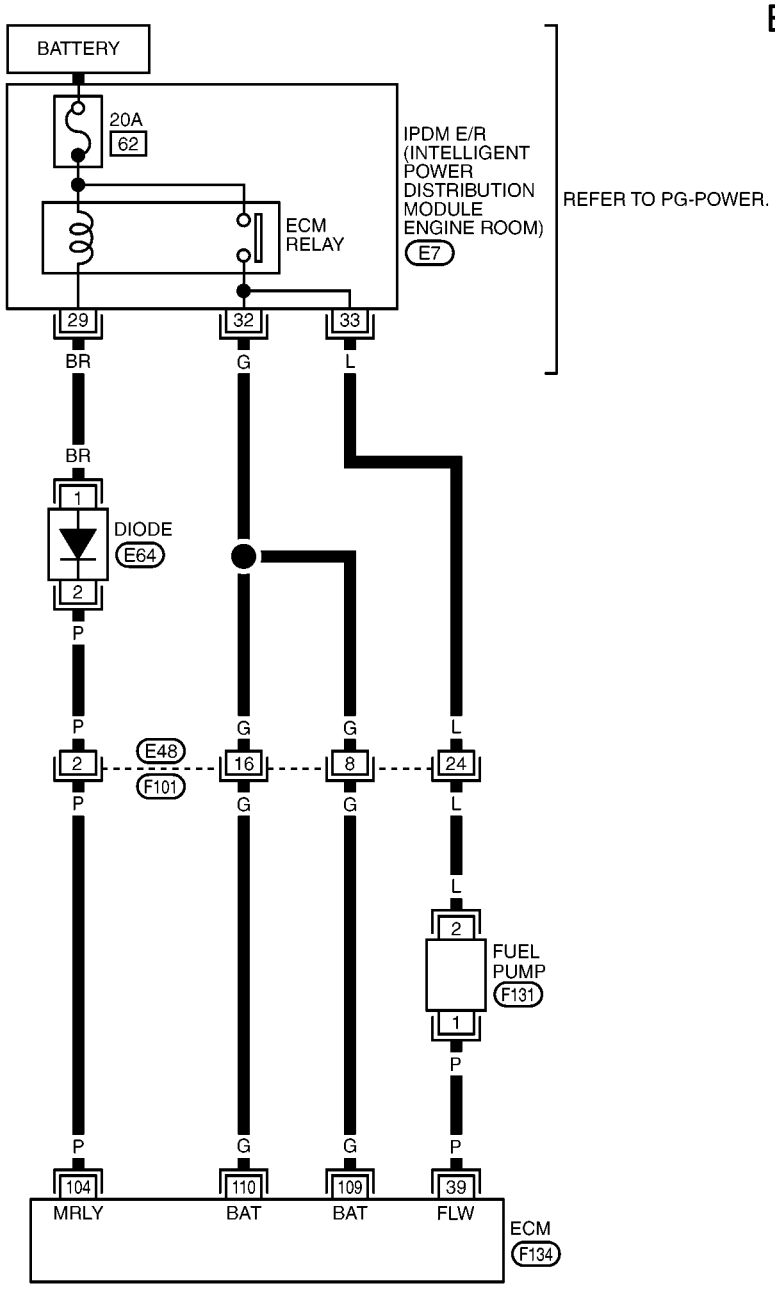

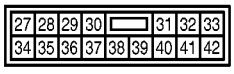

E7
W

E64
W

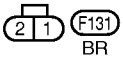

F131
BR

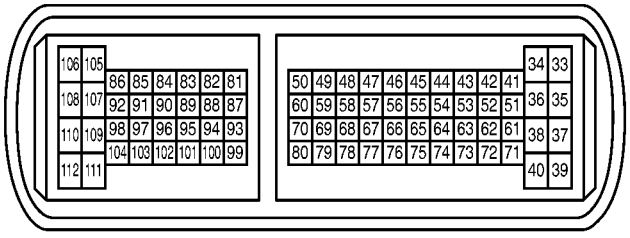

F134

REFER TO THE FOLLOWING.
F101 - SUPER MULTIPLE JUNCTION (SMJ)

MBWA1556E

Specification data are reference values and are measured between each terminal and ground.
Pulse signal is measured by CONSULT-II.

CAUTION:

Do not use ECM ground terminals when measuring input/output voltage. Doing so may result in damage to the ECM's transistor. Use a ground other than ECM terminals, such as the ground.

TERMINAL NO.	WIRE COLOR	ITEM	CONDITION	DATA (DC Voltage and Pulse Signal)
39	P	Fuel pump	**[Engine is running]** ● **Warm-up condition** ● Idle speed	0 - 12.5V ★ 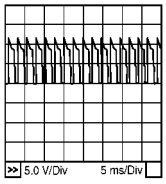 MBIB1506E
			[Engine is running] ● **Warm-up condition** ● Engine speed: 2,000 rpm	0 - 12.5V ★ 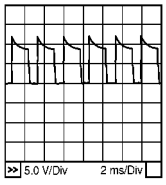 MBIB1507E
104	P	ECM relay (self-shutoff)	**[Ignition switch ON]** **[Ignition switch OFF]** ● For a few seconds after turning ignition switch OFF	Approximately 1.4V
			[Ignition switch OFF] ● More than a few seconds after turning ignition switch OFF	BATTERY VOLTAGE (11 - 14V)
109 110	G G	Power supply for ECM	**[Ignition switch ON]**	BATTERY VOLTAGE (11 - 14V)

★: Average voltage for pulse signal (Actual pulse signal can be confirmed by oscilloscope.)

Diagnostic Procedure

BBS00443

1. CHECK FUEL PUMP POWER SUPPLY CIRCUIT

1. Turn ignition switch OFF.
2. Disconnect fuel pump harness connector.
3. Turn ignition switch ON.
4. Check voltage between fuel pump terminal 2 and ground with CONSULT-II or tester.

Voltage: Battery voltage

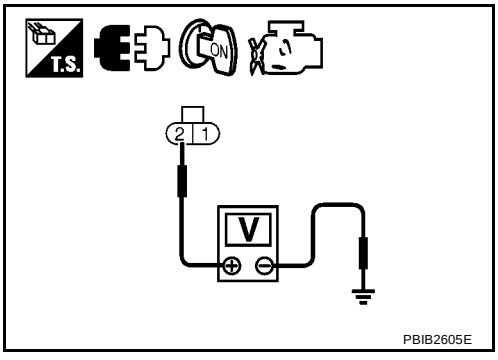

PBIB2605E

OK or NG

OK >> GO TO 3.
NG >> GO TO 2.

2. DETECT MALFUNCTIONING PART

Check the following.

- Harness connectors E48, F101
- Harness for open or short between fuel pump and IPDM E/R

>> Repair open circuit or short to ground or short to power in harness or connectors.

3. CHECK FUEL PUMP OUTPUT SIGNAL CIRCUIT FOR OPEN AND SHORT

1. Turn ignition switch OFF.
2. Disconnect ECM harness connector.
3. Check harness continuity between ECM terminal 39 and fuel pump terminal 1.
   Refer to Wiring Diagram.

   Continuity should exist.

4. Also check harness for short to ground and short to power.

OK or NG

OK >> GO TO 4.
NG >> Repair open circuit or short to ground or short to power in harness or connectors.

4. CHECK FUEL PUMP

Refer to EC-1762, "Component Inspection" .

OK or NG

OK >> GO TO 5.
NG >> Replace fuel pump.

5. CHECK INTERMITTENT INCIDENT

Refer to EC-1697, "TROUBLE DIAGNOSIS FOR INTERMITTENT INCIDENT" .

>> **INSPECTION END**

Component Inspection

BBS00444

FUEL PUMP

1. Disconnect fuel pump harness connector.
2. Check resistance between fuel pump terminals 1 and 2.

   Resistance: 5.3 ± 0.5Ω [at 20°C (68°F)]

3. If NG, replace fuel pump.

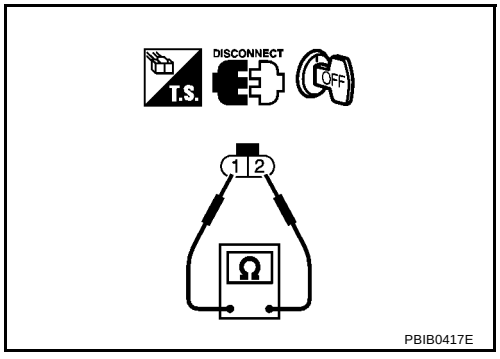

Removal and Installation

BBS00445

FUEL PUMP

Refer to EM-268, "HIGH PRESSURE PUMP" .

DTC P0235 TC BOOST SENSOR

PFP:22693

Component Description

BBS00446

The turbocharger boost sensor detects pressure in the exit side of the charge air cooler. The sensor output voltage to the ECM increases as pressure increases.

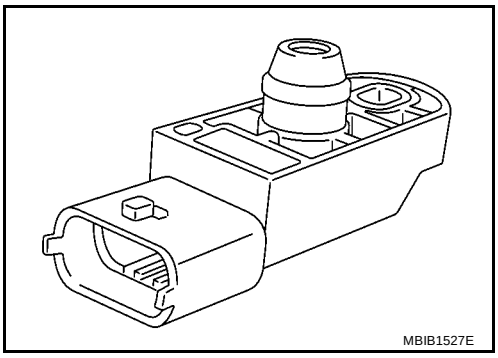

CONSULT-II Reference Value in Data Monitor Mode

BBS00447

Specification data are reference values.

MONITOR ITEM	CONDITION		SPECIFICATION
INLET PRESS	● Engine: After warming up ● Air conditioner switch: OFF ● Shift lever: Neutral position ● No load	Idle	Approximately 980 mbar
		2,000 rpm	Approximately 1,010 mbar

On Board Diagnosis Logic

BBS00448

DTC No.	Trouble diagnosis name	Possible cause
P0235	TURBOCHARGER BOOST SENSOR CIRCUIT ● 1.DEF: Parmanent low lebel ● 2.DEF: Parmanent high lebel ● 3.DEF: Below minimum threshold ● 4.DEF: Above maximum threshold ● 5.DEF: Inconsistency ● 6.DEF: Parmanent at maximum limit ● 7.DEF: Parmanent at minimum limit	● Harness or connectors (The sensor circuit is open or shorted.) ● Turbocharger boost sensor

NOTE:

- **If DTC P0235 is displayed with DTC P0641, first perform the trouble diagnosis for DTC P0641. Refer to EC-1830, "DTC P0641 SENSOR POWER SUPPLY" .**
- **Special notes:**
  - **Malfunction indicator (Red) lights up.**

Wiring Diagram

BBS0044A

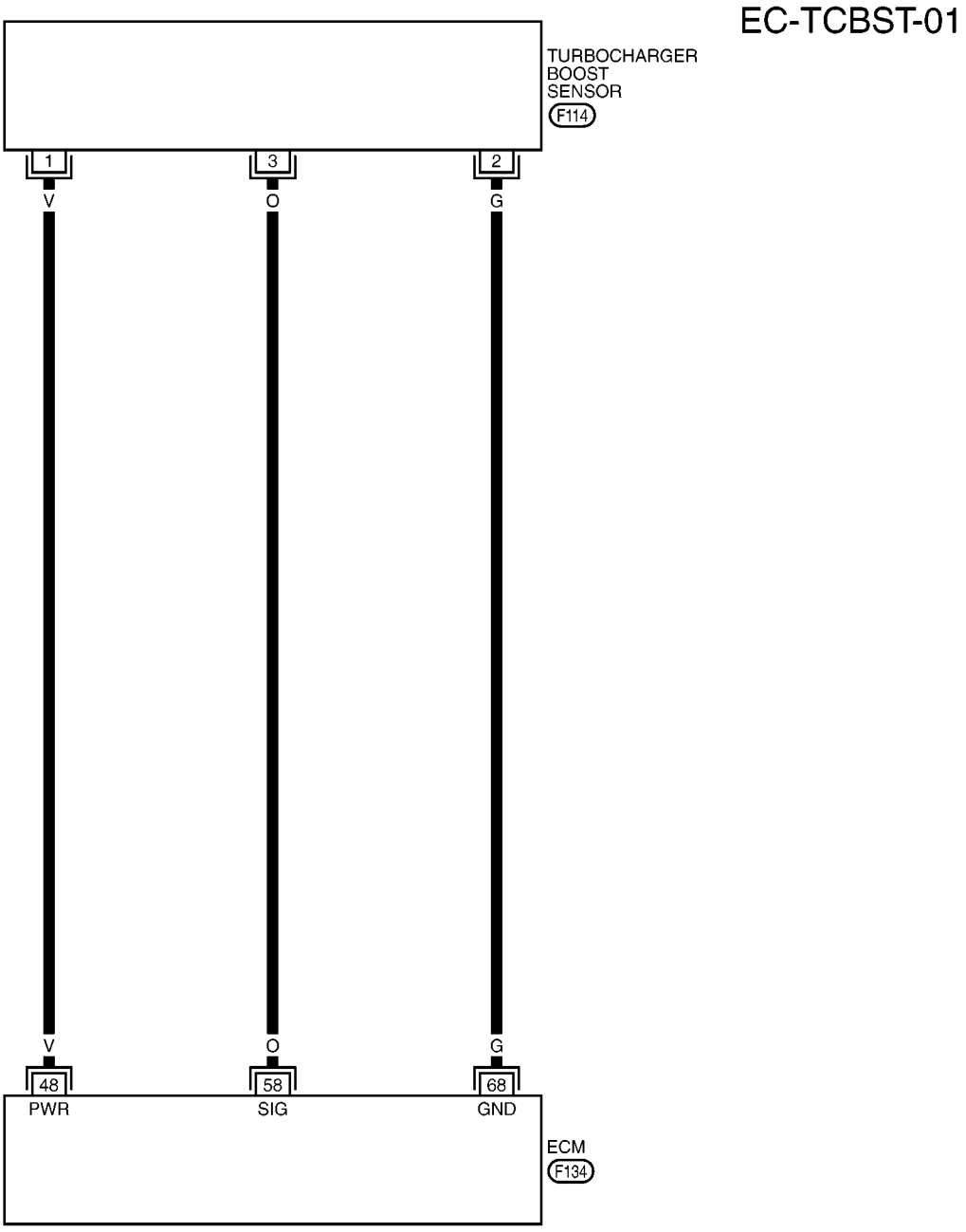

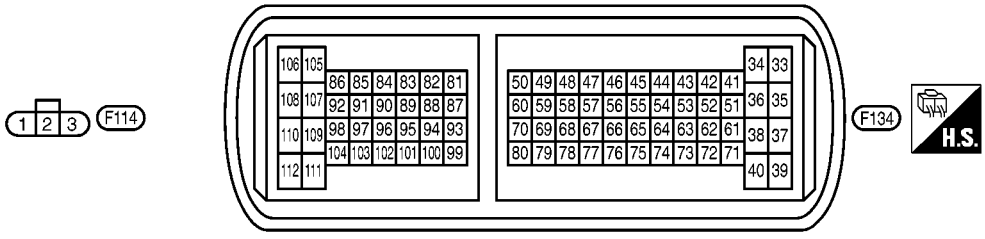

MBWA1557E

Specification data are reference values, and are measured between each terminal and ground.

CAUTION:
Do not use ECM ground terminals when measuring input/output voltage. Doing so may damage the ECM's transistor. Use a ground other than ECM terminals, such as the ground.

TERMINAL NO.	WIRE COLOR	ITEM	CONDITION	DATA (DC Voltage)
48	V	Sensor power supply (Turbocharger boost sensor)	**[Ignition switch ON]**	Approximately 5.0V
58	O	Turbocharger boost sensor	**[Engine is running]** ● **Warm-up condition** ● Idle speed	Approximately 1.6V
			[Engine is running] ● **Warm-up condition** ● Engine speed: 2,000 rpm	Approximately 2.0V
68	G	Sensor ground (Turbocharger boost sensor)	**[Engine is running]** ● **Warm-up condition** ● Idle speed	Approximately 0.3V

Diagnostic Procedure

BBS0044B

1. CHECK GROUND CONNECTIONS

1. Turn ignition switch OFF.
2. Loosen and retighten ground screw on the body.
   Refer to EC-1703, "Ground Inspection" .

– Body ground (1)
– Priming pump (2)

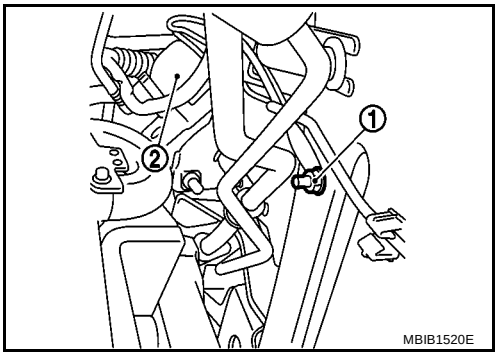

OK or NG

OK >> GO TO 2.
NG >> Repair or replace ground connections.

2. CHECK TURBOCHARGER BOOST SENSOR POWER SUPPLY CIRCUIT

1. Disconnect turbocharge boost sensor (1) harness connector.
2. Turn ignition switch ON.

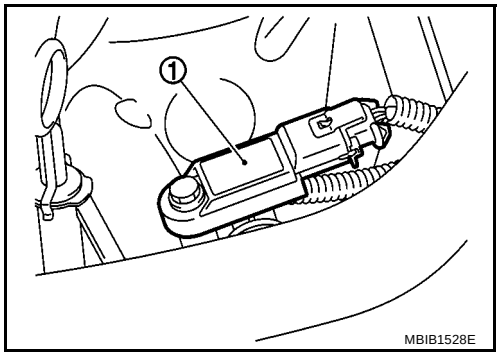

3. Check voltage between turbocharge boost sensor terminal 1 and ground with CONSULT-II or tester.

Voltage: Approximately 5.0V

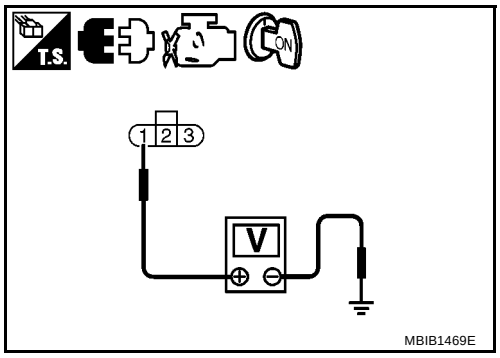

OK or NG

OK >> GO TO 3.
NG >> Repair open circuit or short to ground or short to power in harness or connectors.

3. CHECK TURBOCHAGER BOOST SENSOR GROUND CIRCUIT FOR OPEN AND SHORT

1. Turn ignition switch OFF.
2. Disconnect ECM harness connector.
3. Check harness continuity between turbocharger boost sensor terminal 2 and ECM terminal 68. Refer to Wiring Diagram.

Continuity should exist.

4. Also check harness for short to ground and short to power.

OK or NG

OK >> GO TO 4.
NG >> Repair open circuit or short to ground or short to power in harness or connectors.

4. CHECK TURBOCHAGER BOOST SENSOR INPUT SIGNAL CIRCUIT FOR OPEN AND SHORT

1. Check harness continuity between ECM terminals 58 and turbocharger boost sensor terminal 3. Refer to Wiring Diagram.

Continuity should exist.

2. Also check harness for short to ground and short to power.

OK or NG

OK >> GO TO 5.
NG >> Repair open circuit or short to ground or short to power in harness connectors.

5. CHECK INTERMITTENT INCIDENT

Refer to EC-1697, "TROUBLE DIAGNOSIS FOR INTERMITTENT INCIDENT" .

OK or NG

OK >> Replace turbocharger boost sensor.
NG >> Repair open circuit or short to ground or short to power in harness connectors.

Removal and Installation

BBS0044D

TURBOCHARGER BOOST SENSOR

Refer to EM-247, "CHARGE AIR COOLER" .

DTC P0263, P0266, P0269, P0272 NO.1 - 4 CYLINDER MISFIRE

PFP:22693

On Board Diagnosis Logic

BBS0044T

DTC No.	Trouble diagnosis name	Possible cause
P0263 P0266 P0269 P0272	NO. 1 CYLINDER MISFIRE NO. 2 CYLINDER MISFIRE NO. 3 CYLINDER MISFIRE NO. 4 CYLINDER MISFIRE	● Insufficient compression ● Incorrect valve clearance ● Intake air leak ● EGR volume control valve ● The fuel injector circuit is open or shorted ● Fuel injector

NOTE:

- **If DTC P0263, P0266, P0269 or P0272 is displayed with DTC P0201, P0202, P0203 or P0204, first perform the trouble diagnosis for DTC P0201, P0202, P0203 or P00204. Refer to EC-1745, "DTC P0201 - P0204 FUEL INJECTOR" .**
- **If DTC P0263, P0266, P0269 or P0272 is displayed with DTC P0089, first perform the trouble diagnosis for DTC P0089. Refer to EC-1721, "DTC P0089 FUEL PUMP" .**
- **Conditions for applying the diagnostic procedure to the stored DTCs:**
  The DTC is declared present when the engine speed is at idle speed.
- **Special notes:**
  - If this DTC is present, the engine is maintained at 1,000 rpm and engine performance is reduced.
  - **Malfuction indicator (Red) lights up.**

Diagnostic Procedure

BBS0044V

1. CHECK FOR INTAKE AIR LEAK

1. Start engine and run it at idle speed.
2. Listen for the sound of the intake air leak.

OK or NG

OK >> GO TO 2.
NG >> Discover air leak location and repair.

2. CHECK FOR EGR VOLUME CONTROL VALVE

1. Stop engine.
2. Visually check EGR volume comtrol valve.

Refer to EM-251, "EGR UNIT" .

OK or NG

OK >> GO TO 3.
NG >> Repair or replace.

3. CHECK FUEL INJECTOR

Refer to EC-1750, "Component Inspection" .

OK or NG

OK >> GO TO 5.
NG >> GO TO 4.

4. REPLACE FUEL INJECOR

1. Replace fuel injector of malfunctioning cylinder.
2. Perform Injector Adjustment Value Registration. Refer to EC-1625, "Injector Adjustment Value Registration" .

>> **INSPECTION END**

5. CHECK COMPRESSION PRESSURE

Check compression pressure.

OK or NG

OK >> GO TO 6.
NG >> Repair.

6. CHECK VALVE CLEARANCE

Check valve clearance.
Refer to EM-292, "Valve Clearance" .

OK or NG

OK >> GO TO 7.
NG >> Repair.

7. CHECK INTERMITTENT INCIDENT

Perform EC-1697, "TROUBLE DIAGNOSIS FOR INTERMITTENT INCIDENT" .

>> **INSPECTION END**

DTC P0325 KNOCK SENSOR (KS)

PFP:22060

Component Description

BBS0044W

The knock sensor (1) is attached to the cylinder block. It senses engine knocking using a piezoelectric element. A knocking vibration from the cylinder block is sensed as vibrational pressure. This pressure is converted into a voltage signal and sent to the ECM.

- Fuel rail (2)

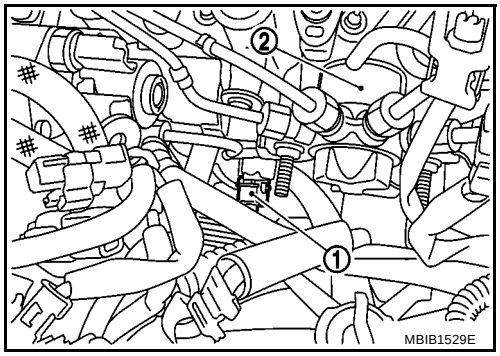

On Board Diagnosis Logic

BBS0044X

The MIL will not light up for these diagnoses.

DTC No.	Trouble Diagnosis Name	Possible Cause
P0325	KNOCK SENSOR CIRCUIT	● Harness or connectors (The sensor circuit is open or shorted.) ● Knock sensor

NOTE:

- **If DTC P0325 is displayed with DTC P0115, P0180 or P2226, first perform the trouble diagnosis for DTC P0115, P0180 or P22264. Refer to EC-1727, "DTC P0115 ECT SENSOR" , EC-1732, "DTC P0180 FUEL PUMP TEMPERATURE SENSOR" or EC-1863, "DTC P2226 BARO SENSOR" .**
  A malfunction for these sensors could lead to an incorrect touble diagnosis on the knock sensor.
- **Conditions for applying the diagnostic procedure to the stored DTCs:**
  The DTC is declared present when the engine speed is at idle speed.

Wiring Diagram

BBS0044Z

EC-KS-01

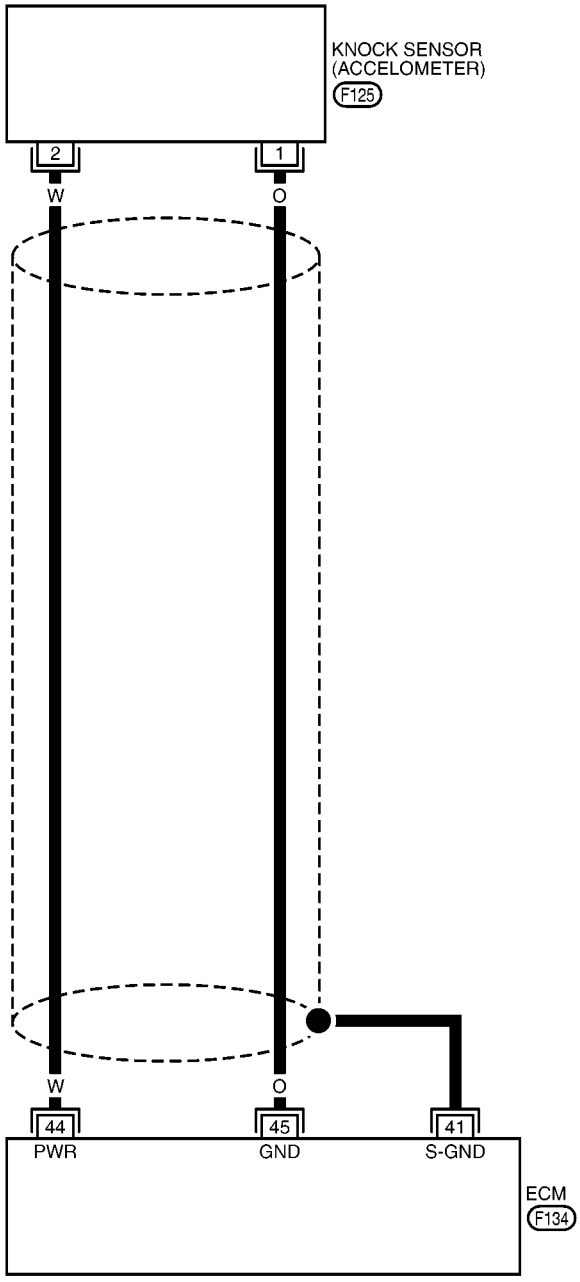

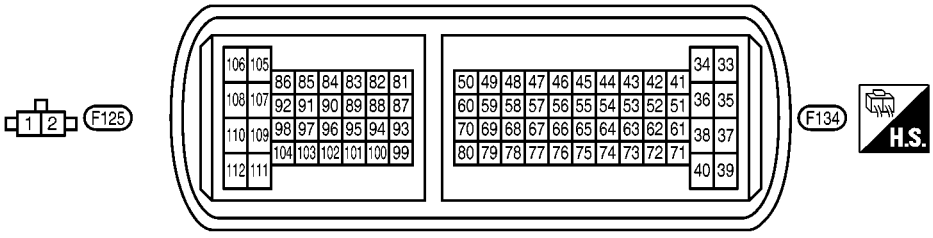

MBWA1558E

Specification data are reference values and are measured between each terminal and ground.

CAUTION:

Do not use ECM ground terminals when measuring input/output voltage. Doing so may result in damage to the ECM's transistor. Use a ground other than ECM terminals, such as the ground.

TERMINAL NO.	WIRE COLOR	ITEM	CONDITION	DATA (DC Voltage)
41	—	Sensor ground (Knock sensor shield circuit)	**[Engine is running]** ● Idle speed	Approximately 0.2V
44	W	Knock sensor	**[Engine is running]** ● Idle speed	Approximately 0.3V
45	O	Sensor ground (Knock sensor)	**[Engine is running]** ● **Warm-up condition** ● Idle speed	Approximately 0.3V

Diagnostic Procedure

BBS00450

1. CHECK GROUND CONNECTIONS

1. Turn ignition switch OFF.
2. Loosen and retighten ground screw on the body. Refer to EC-1703, "Ground Inspection" .

– Body ground (1)
– Primimg pump (2)

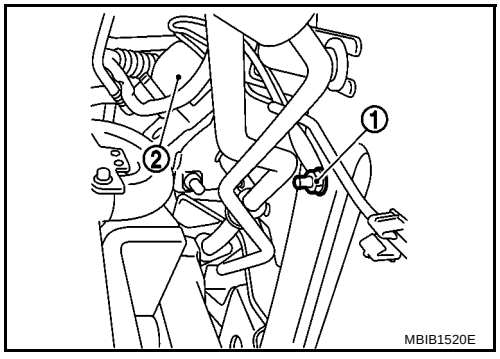

OK or NG

OK >> GO TO 2.
NG >> Repair or replace ground connections.

2. CHECK KNOCK SENSOR GROUND CIRCUIT FOR OPEN AND SHORT

1. Disconnect knock sensor (1) harness connector.

– Fuel rail (2)

2. Disconnect ECM harness connector.
3. Check harness continuity between knock sensor terminal 1 and ECM terminal 45. Refer to Wiring Diagram.

Continuity should exist.

4. Also check harness for short to ground and short to power.

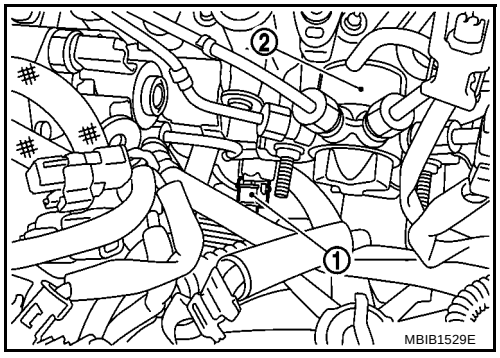

OK or NG

OK >> GO TO 3.
NG >> Repair open circuit or short to ground or short to power in harness or connectors.

3. CHECK KNOCK SENSOR INPUT SIGNAL CIRCUIT FOR OPEN AND SHORT

1. Check harness continuity between knock sensor terminal 2 and ECM terminal 44. Refer to Wiring Diagram.

Continuity should exist.

2. Also check harness for short to ground and short to power.

OK or NG

OK >> GO TO 4.
NG >> Repair open circuit or short to ground or short to power in harness or connectors.

4. CHECK KNOCK SENSOR

Check continuity between knock sensor terminals 1 and 2.

Continuity should exist.

OK or NG

OK >> GO TO 5.
NG >> Replace knock sensor.

5. CHECK INTERMITTENT INCIDENT

Refer to EC-1697, "TROUBLE DIAGNOSIS FOR INTERMITTENT INCIDENT" .

>> **INSPECTION END**

Removal and Installation

BBS00452

KNOCK SENSOR

Refer to EM-282, "OVERHAUL" .

DTC P0335 CKP SENSOR

PFP:23731

Description

BBS0044E

The crankshaft position (CKP) sensor is located on the oil pan facing the gear teeth (cogs) of the signal plate.
The ECM receives the voltage signal from crankshaft position sensor and detects the fluctuation of the engine revolution.

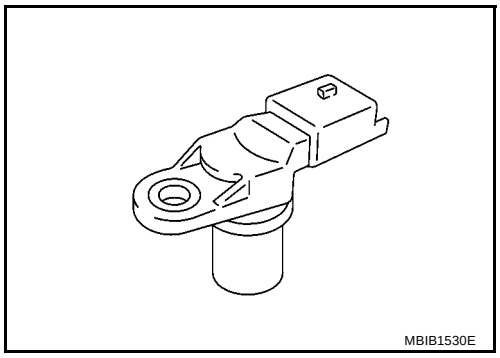

CONSULT-II Reference Value in Data Monitor Mode

BBS0044F

Specification data are reference values.

MONITOR ITEM	CONDITION	SPECIFICATION
ENGINE SPEED	● Run engine and compare CONSULT-II value with the tachometer indication.	Almost the same speed as the tachometer indication

On Board Diagnosis Logic

BBS0044G

DTC No.	Trouble diagnosis name	Possible cause
P0335	CRANKSHAFT POSITION SENSOR CIRCUIT ● 1.DEF: Inconsistency ● 2.DEF: No signal ● 3.DEF: Too many additional teeth ● 4.DEF: Teeth missing ● 5.DEF: Additional teeth ● 6.DEF: Too many teeth missing	● Harness or connectors (The sensor circuit is open or shorted.) ● Crankshaft position sensor

NOTE:

- **Conditions for applying the diagnostic procedure to the stored DTCs:**
  The DTC is declared present with the engine cranking or idling.
- **Special notes:**
  - If this DTC (with 1.DEF, 2.DEF, 3.DEF, 6.DEF) is present, the engine stops and **malfunction indicator (Red) lights up.**
  - If this DTC (with 4.DEF, 5.DEF) is present, the engine performance is reduced and malfunction indicator (Red) will not light up.

Wiring Diagram

BBS0044I

EC-CKPS-01

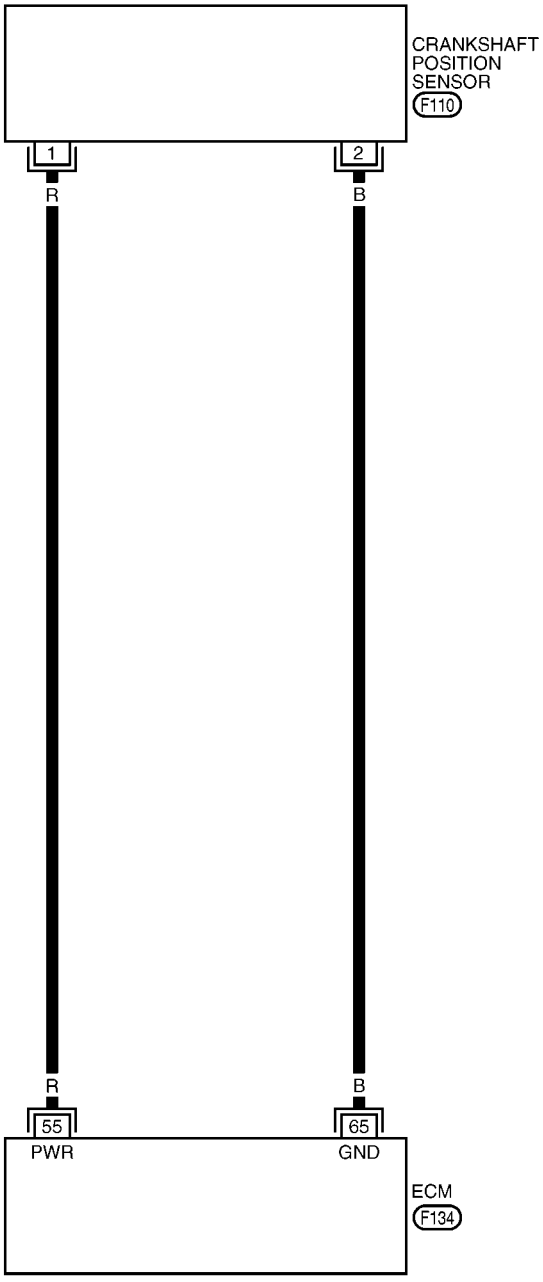

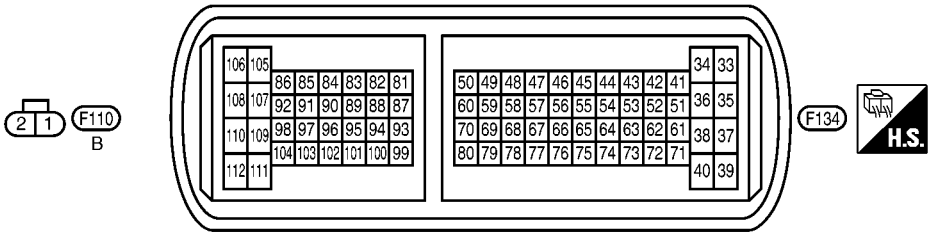

MBWA1559E

Specification data are reference values and are measured between each terminal and ground.
Pulse signal is measured by CONSULT-II.

CAUTION:

Do not use ECM ground terminals when measuring input/output voltage. Doing so may result in damage to the ECM's transistor. Use a ground other than ECM terminals, such as the ground.

TERMINAL NO.	WIRE COLOR	ITEM	CONDITION	DATA (DC Voltage and Pulse Signal)
55	R	Crankshaft position sensor	**[Engine is running]** ● **Warm-up condition** ● Idle speed **NOTE:** The pulse cycle changes depending on rpm at idle.	0 - 12.5V ★ 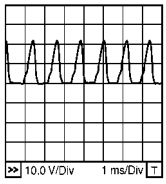 MBIB1508E
			[Engine is running] ● **Warm-up condition** ● Engine speed: 2,000 rpm	0 - 12.5V ★ 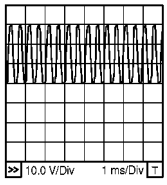 MBIB1509E
65	B	Crankshaft position sensor ground	**[Engine is running]** ● **Warm-up condition** ● Idle speed	Approximately 0.3V

★: Average voltage for pulse signal (Actual pulse signal can be confirmed by oscilloscope.)

Diagnostic Procedure

BBS0044J

1. CHECK GROUND CONNECTIONS

1. Turn ignition switch OFF.
2. Loosen and retighten ground screw on the body.
   Refer to EC-1703, "Ground Inspection" .

– Body ground (1)
– Priming pump (2)

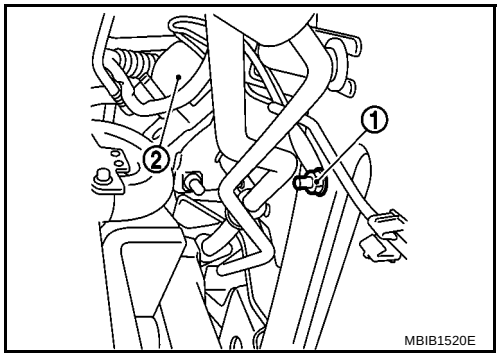

MBIB1520E

OK or NG

OK >> GO TO 2.
NG >> Repair or replace ground connections.

2. CHECK CKP SENSOR GROUND CIRCUIT FOR OPEN AND SHORT

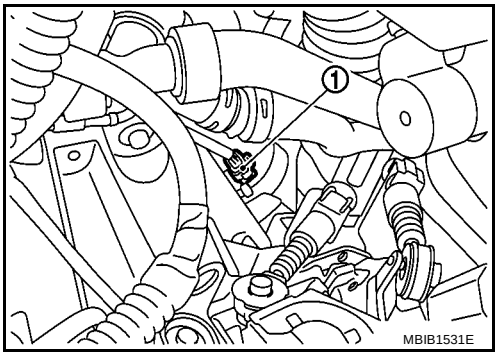

1. Disconnect crankshaft position (CKP) sensor (1) harness connector.
2. Disconnect ECM harness connector.
3. Check harness continuity between ECM terminal 65 and CKP sensor terminal 2.
   Refer to Wiring Diagram.

   Continuity should exist.

4. Also check harness for and short to ground and short to power.

OK or NG

OK >> GO TO 3.
NG >> Repair open circuit or short to ground or short to power in harness or connectors.

3. CHECK CKP SENSOR INPUT SIGNALCIRCUIT FOR OPEN AND SHORT

1. Check harness continuity between ECM terminal 55 and CKP sensor terminal 1.
   Refer to Wiring Diagram.

   Continuity should exist.

2. Also check harness for and short to ground and short to power.

OK or NG

OK >> GO TO 4.
NG >> Repair open circuit or short to ground or short to power in harness or connectors.

4. CHECK CRANKSHAFT POSITION SENSOR

Refer to EC-1777, "Component Inspection" .

OK or NG

OK >> GO TO 5.
NG >> Replace crankshaft position sensor.

5. CHECK GEAR TOOTH

Visually check for chipping flywheel gear tooth.

OK or NG

OK >> GO TO 6.
NG >> Replace signal plate.

6. CHECK INTERMITTENT INCIDENT

Refer to EC-1697, "TROUBLE DIAGNOSIS FOR INTERMITTENT INCIDENT" .

>> **INSPECTION END**

Component Inspection

BBS0044K

CRANKSHAFT POSITION SENSOR

1. Disconnect crankshaft position sensor harness connector.
2. Check resistance between crankshaft positon sensor terminals 1 and 2.

   Resistance: 760 Ω

3. If NG, replace crankshaft position sensor.

Removal and Installation

BBS0044L

CRANKSHAFT POSITION SENSOR

Refer to EM-257, "OIL PAN" .

DTC P0340 CMP SENSOR

PFP:23731

Description

BBS0044M

The camshaft position (CMP) sensor senses the retraction with camshaft to identify a particular cylinder. The camshaft position (CMP) sensor senses the piston position.
The sensor consists of a permanent magnet and Hall IC.
When engine is running, the high and low parts of the teeth cause the gap with the sensor to change.
The changing gap causes the magnetic field near the sensor to change.
Due to the changing magnetic field, the voltage from the sensor changes.

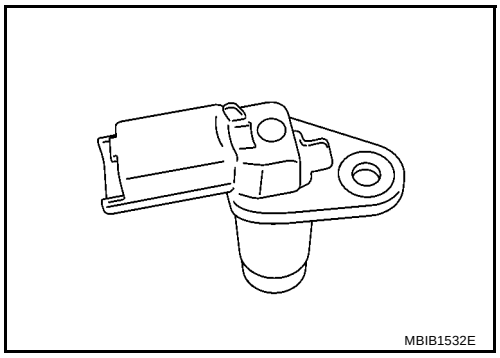

On Board Diagnosis Logic

BBS0044N

DTC No.	Trouble diagnosis name	Possible cause
P0340	CAMSHAFT POSITION SENSOR CIRCUIT ● 1.DEF: Signal absent	● Harness or connectors (The sensor circuit is open or shorted.) ● Camshaft position sensor ● Timing belt ● Signal plate

NOTE:

- **Conditions for applying the diagnostic procedure to the stored DTCs:**
  The DTC is declared present with the engine cranking or idling.

Wiring Diagram

BBS0044P

EC-CMPS-01

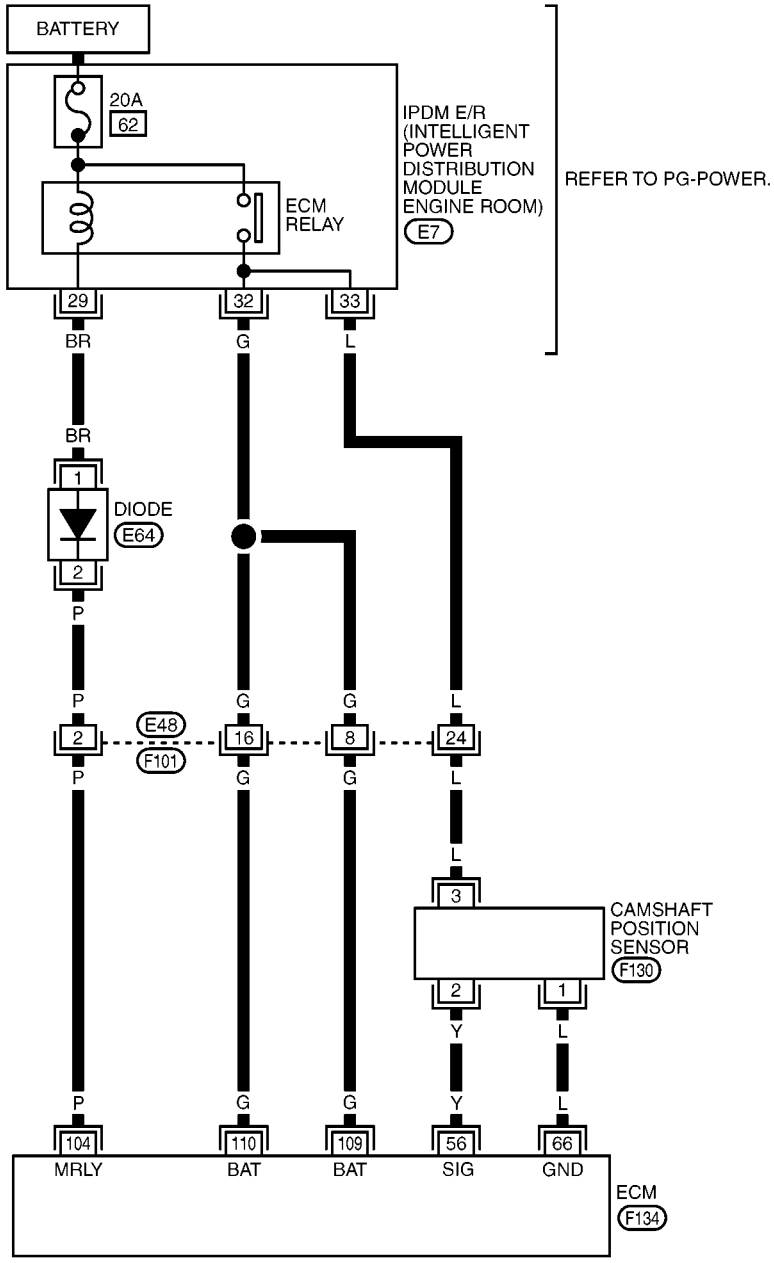

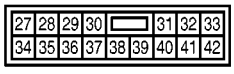

E7
W

E64
W

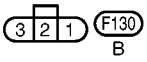

F130
B

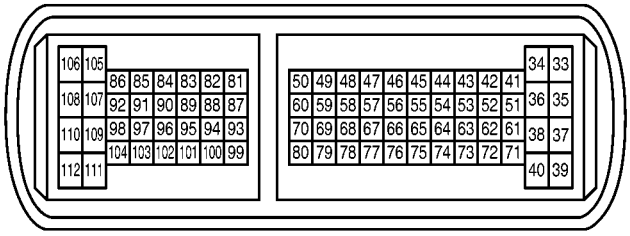

F134

REFER TO THE FOLLOWING.
F101 - SUPER MULTIPLE JUNCTION (SMJ)

MBWA1560E

Specification data are reference values and are measured between each terminal and ground.
Pulse signal is measured by CONSULT-II.

CAUTION:

Do not use ECM ground terminals when measuring input/output voltage. Doing so may result in damage to the ECM's transistor. Use a ground other than ECM terminals, such as the ground.

TERMINAL NO.	WIRE COLOR	ITEM	CONDITION	DATA (DC Voltage and Pulse Signal)
56	Y	Camshaft position sensor	**[Engine is running]** ● **Warm-up condition** ● Idle speed **NOTE:** The pulse cycle changes depending on rpm at idle.	0 - 1V ★ 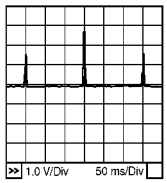 MBIB1510E
			[Engine is running] ● **Warm-up condition** ● Engine speed: 2,000 rpm	0 - 1V ★ 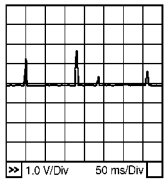 MBIB1511E
66	L	Sensor ground (Camshaft position sensor)	**[Engine is running]** ● **Warm-up condition** ● Idle speed	Approximately 0.3V
104	P	ECM relay (self-shutoff)	**[Ignition switch ON]** **[Ignition switch OFF]** ● For a few seconds after turning ignition switch OFF	Approximately 1.4V
			[Ignition switch OFF] ● More than a few seconds after turning ignition switch OFF	BATTERY VOLTAGE (11 - 14V)
109 110	G G	Power supply for ECM	**[Ignition switch ON]**	BATTERY VOLTAGE (11 - 14V)

★: Average voltage for pulse signal (Actual pulse signal can be confirmed by oscilloscope.)

Diagnostic Procedure

BBS0044Q

1. CHECK GROUND CONNECTIONS

1. Turn ignition switch OFF.
2. Loosen and retighten ground screw on the body.
   Refer to EC-1703, "Ground Inspection" .

– Body ground (1)
– Priming pump (2)

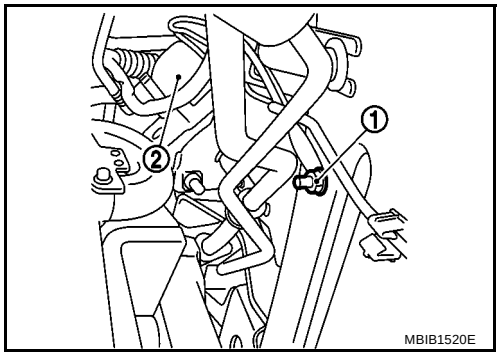

MBIB1520E

OK or NG

OK >> GO TO 2.
NG >> Repair or replace ground connections.

2. CHECK CMP SENSOR POWER SUPPLY CIRCUIT

1. Disconnect camshaft position (CMP) sensor (1) harness connector.
2. Turn ignition switch ON.

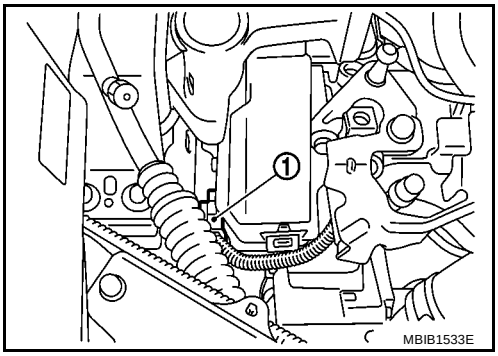

3. Check voltage between CMP sensor terminal 3 and ground with CONSULT-II or tester.

Voltage: Approximately 5.0V

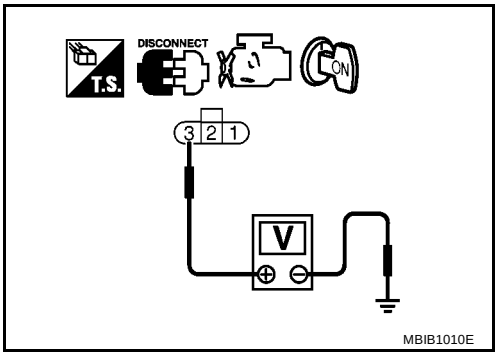

OK or NG

OK >> GO TO 4.
NG >> GO TO 3.

3. DETECT MALFUNCTIONING PART

Check the following.

- Harness connectors E48, F101
- Harness continuity between camshaft position sensor and IPDM E/R

>> Repair open circuit or short to ground or short to power in harness or connectors.

4. CHECK CMP SENSOR GROUND CIRCUIT FOR OPEN AND SHORT

1. Turn ignition switch OFF.
2. Disconnect ECM harness connector.
3. Check harness continuity between ECM terminal 66 and CMP sensor terminal 1. Refer to Wiring Diagram.

Continuity should exist.

4. Also check harness for short to ground and short to power.

OK or NG

OK >> GO TO 5.
NG >> Repair open circuit or short to ground or short to power in harness or connectors.

5. CHECK CMP SENSOR INPUT SIGNAL CIRCUIT FOR OPEN AND SHORT

1. Check harness continuity between ECM terminal 56 and CMP sensor terminal 2. Refer to Wiring Diagram.

Continuity should exist.

2. Also check harness for short to ground and short to power.

OK or NG

OK >> GO TO 6.
NG >> Repair open circuit or short to ground or short to power in harness or connectors.

6. CHECK CAMSHAFT POSITION SENSOR

Refer to EC-1783, "Component Inspection" .

OK or NG

OK >> GO TO 7.
NG >> Replace camshaft position sensor.

7. CHECK SPROCKET

Visually check for chipping signal plate gear tooth.

OK or NG

OK >> GO TO 8.
NG >> Repair or replace sprocket.

8. CHECK TIMING BELT

Refer to EM-272, "TIMING BELT" .

OK or NG

OK >> GO TO 8.
NG >> Replace timing belt.

9. CHECK INTERMITTENT INCIDENT

Refer to EC-1697, "TROUBLE DIAGNOSIS FOR INTERMITTENT INCIDENT" .

>> **INSPECTION END**

Component Inspection

BBS0044R

CAMSHAFT POSITION SENSOR

1. Reconnect all harness connectors disconnected.
2. Start engine and warm it up to normal operating temperature.
3. Measure the voltage signal between ECM terminal 56 and ground with CONSULT-II or tester under the followng conditions.

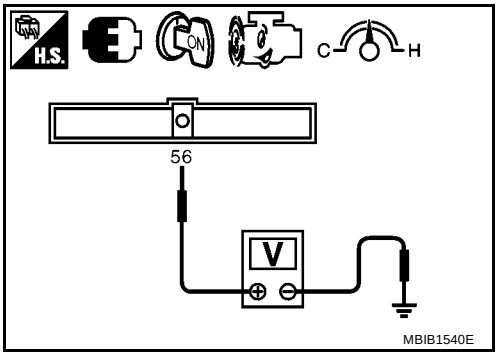

CONDITION	DATA (DC Voltage and Pulse Signal)
[Engine is running] ● **Warm-up condition** ● Idle speed **NOTE:** The pulse cycle changes depending on rpm at idle.	0 - 1V ★ 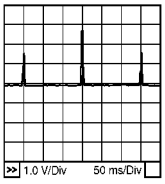 MBIB1510E
[Engine is running] ● **Warm-up condition** ● Engine speed: 2,000 rpm	0 - 1V ★ 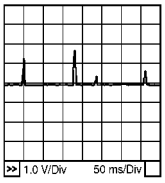 MBIB1511E

4. If NG, replace camshaft position sensor.

Removal and Installation

BBS0044S

CAMSHAFT POSITION SENSOR

Refer to EM-272, "TIMING BELT" .

DTC P0380 GLOW CONTROL UNIT

PFP:22693

On Board Diagnosis Logic

BBS00453

DTC No.	Trouble diagnosis name	Possible cause
P0380	GLOW PLUG DIAGNOSTIC CONNECTION	● Harness or connectors (The glow control unit circuit is open.) ● Glow control unit

Wiring Diagram

BBS00455

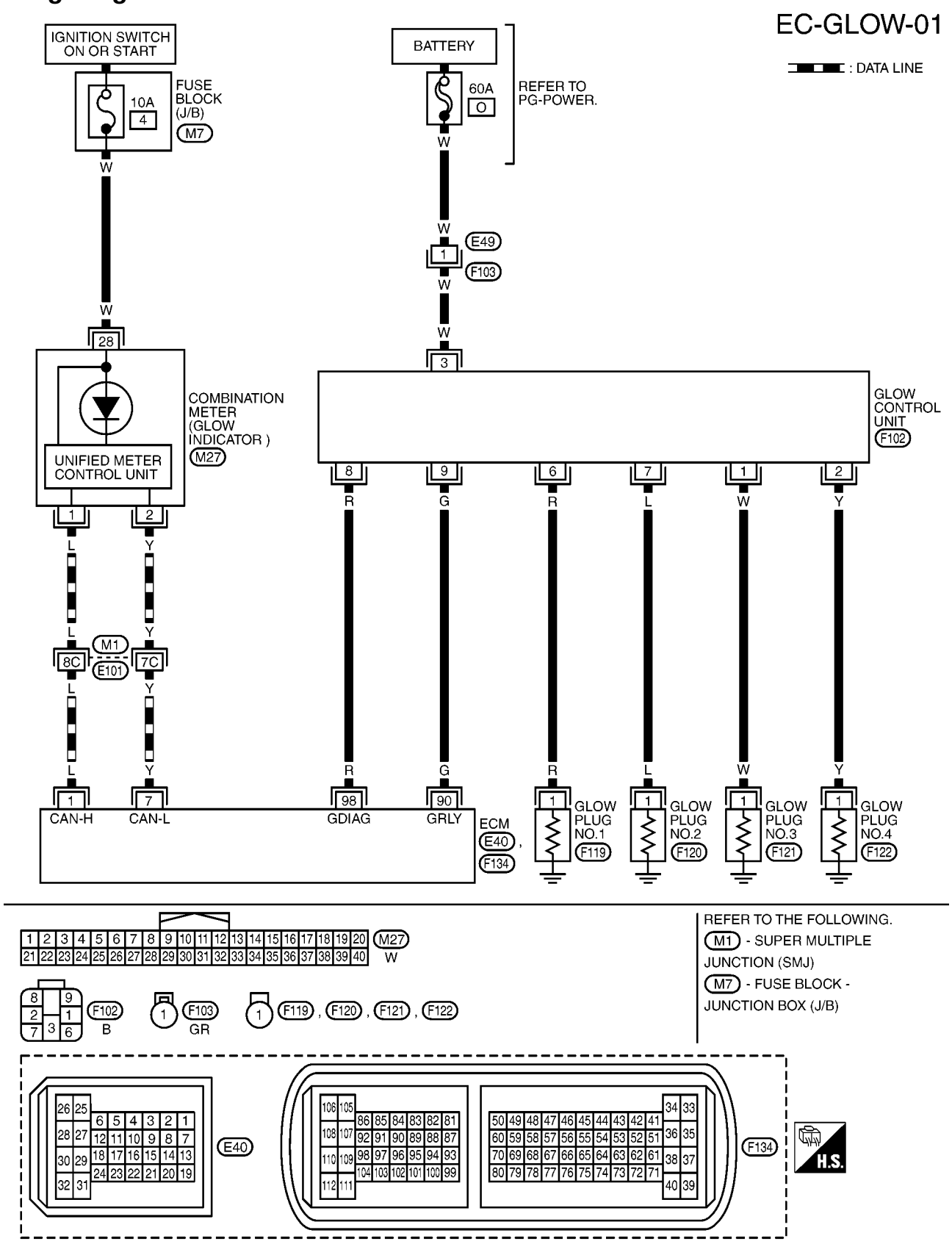

MBWA1561E

Diagnostic Procedure

BBS00456

1. CHECK GLOW CONTROL UNIT POWER SUPPLY CIRCUIT

1. Turn ignition switch OFF.
2. Disconnect glow control unit harness connecetor.
3. Check voltage between glow control unit terminal 3 and ground with CONSULT-II or tester.

Voltage: Battery voltage

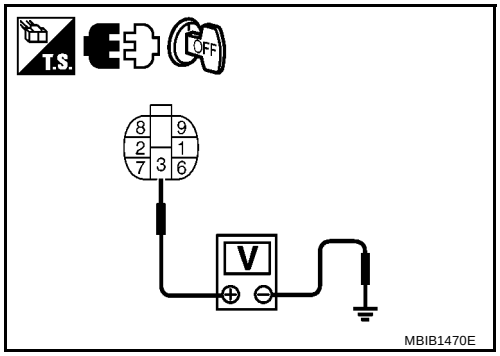

OK or NG

OK >> GO TO 3.
NG >> GO TO 2.

2. DETECT MALFUNCTIONING PART

Check the following.

- Harness connectors E49, F103
- 60A fusible link
- Harness for open and short between glow control unit and battery

>> Repair open circuit or short to ground or short to power in harness or connectors.

3. CHECK GLOW CONTROL UNIT OUTPUT SIGNAL CIRCUIT FOR OPEN AND SHORT

1. Disconnect ECM harness connector.
2. Check harness continuity between ECM terminal 90 and glow control unit terminal 9. Refer to Wiring Diagram.

Continuity should exist.

3. Also check harness for short to ground and short to power.

OK or NG

OK >> GO TO 4.
NG >> Repair open circuit or short to ground or short to power in harness or connectors.

4. CHECK GLOW CONTROL UNIT INPUT SIGNAL CIRCUIT FOR OPEN AND SHORT

1. Check harness continuity between ECM terminal 98 and glow control unit terminal 8. Refer to Wiring Diagram.

Continuity should exist.

2. Also check harness for short to ground and short to power.

OK or NG

OK >> GO TO 5.
NG >> Repair open circuit or short to ground or short to power in harness or connectors.

5. CHECK GLOW PLUG CIRCUIT

1. Disconnect glow plug harness connectors.
2. Check harness continuity between glow control unit terminals 1, 2, 6, 7 and glow plug teminal 1. Refer to Wiring Diagram.

   Continuity should exist.

3. Also check harness for short to ground and short to power.

OK or NG

OK >> GO TO 6.
NG >> Repair open circuit or short to ground or short to power in harness or connectors.

6. CHECK INTERMITTENT INCIDENT

Refer to EC-1697, "TROUBLE DIAGNOSIS FOR INTERMITTENT INCIDENT" .

OK or NG

OK >> Replace glow control unit
NG >> Repair or replace.

DTC P0382 GLOW CONTROL UNIT

PFP:22693

On Board Diagnosis Logic

BBS00458

DTC No.	Trouble diagnosis name	Possible cause
P0382	GLOW CONTROL UNIT CIRCUIT ● CC.1: Short circuit to +12V ● CO.0: Open circuit or short circuit to ground	● Harness or connectors (The glow control unit circuit is open or shorted.) ● Glow control unit

NOTE:

- **Special note:**
  - If this DTC is present, engine starting is difficult (or impossible when cold).
  - If this DTC (with CO.0) is present, continuous operation of the glow plugs permanently controlled with risk of being damaged and risk of damaging the engine.

Wiring Diagram

BBS0045A

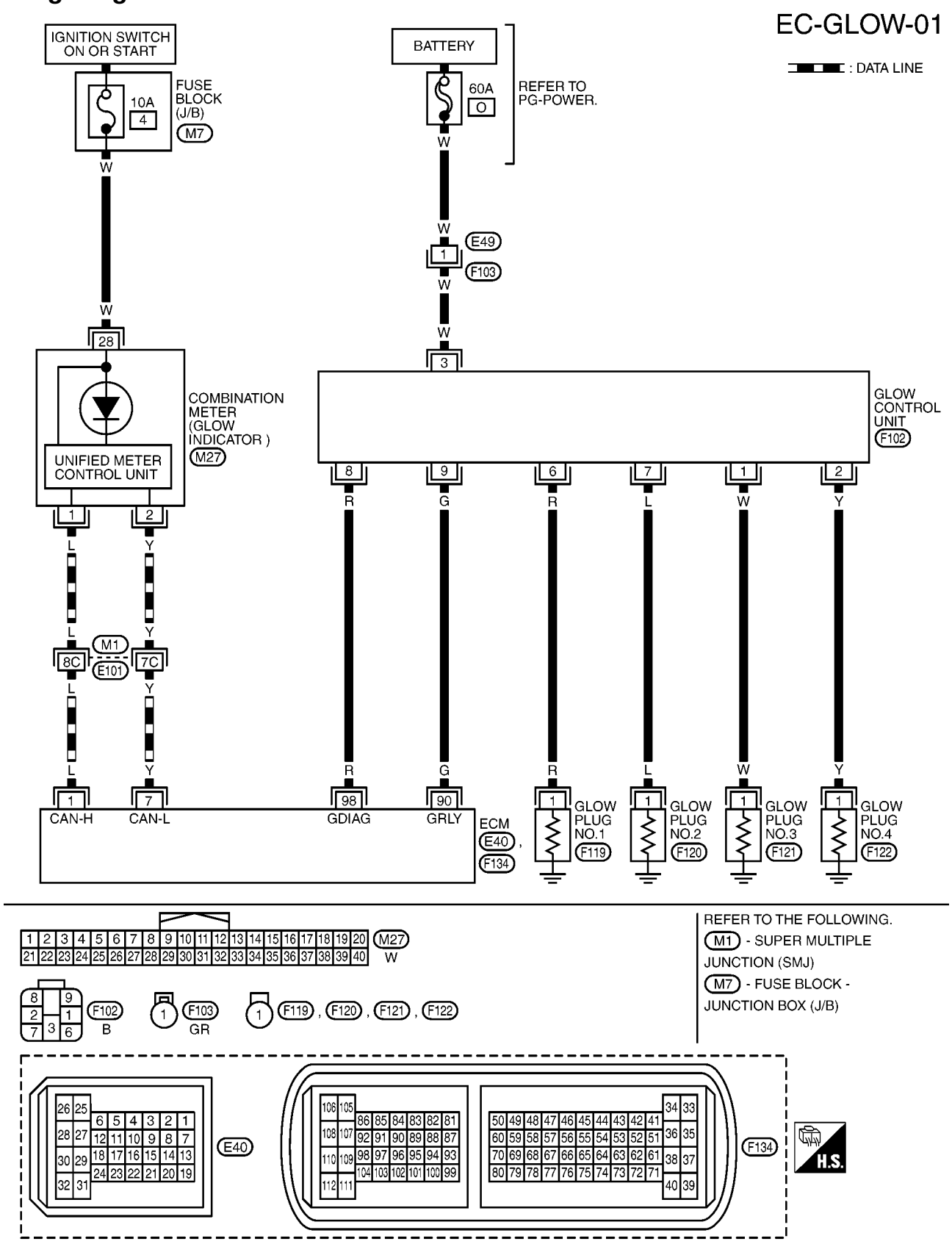

Diagnostic Procedure

BBS0045B

1. CHECK GLOW CONTROL UNIT POWER SUPPLY CIRCUIT

1. Turn ignition switch OFF.
2. Disconnect glow control unit harness connecetor.
3. Check voltage between glow control unit terminal 3 and ground with CONSULT-II or tester.

Voltage: Battery voltage

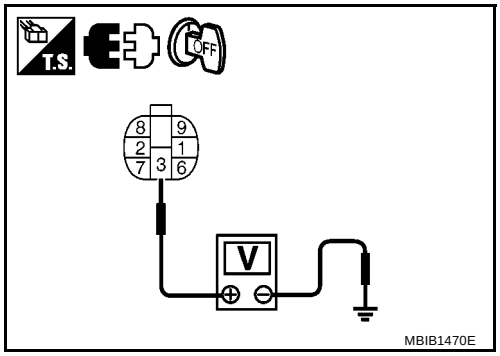

OK or NG

OK >> GO TO 3.
NG >> GO TO 2.

2. DETECT MALFUNCTIONING PART

Check the following.

- Harness connectors E49, F103
- 60A fusible link
- Harness for open and short between glow control unit and battery

>> Repair open circuit or short to ground or short to power in harness or connectors.

3. CHECK GLOW CONTROL UNIT OUTPUT SIGNAL CIRCUIT FOR OPEN AND SHORT

1. Disconnect ECM harness connector.
2. Check harness continuity between ECM terminal 90 and glow control unit terminal 9. Refer to Wiring Diagram.

Continuity should exist.

3. Also check harness for short to ground and short to power.

OK or NG

OK >> GO TO 4.
NG >> Repair open circuit or short to ground or short to power in harness or connectors.

4. CHECK GLOW CONTROL UNIT INPUT SIGNAL CIRCUIT FOR OPEN AND SHORT

1. Check harness continuity between ECM terminal 98 and glow control unit terminal 8. Refer to Wiring Diagram.

Continuity should exist.

2. Also check harness for short to ground and short to power.

OK or NG

OK >> GO TO 5.
NG >> Repair open circuit or short to ground or short to power in harness or connectors.

5. CHECK INTERMITTENT INCIDENT

Refer to EC-1697, "TROUBLE DIAGNOSIS FOR INTERMITTENT INCIDENT" .

OK or NG

OK >> Replace glow control unit
NG >> Repair or replace.

DTC P0400 EGR FUNCTION

PFP:14710

CONSULT-II Reference Value in Data Monitor Mode

BBS0045E

Specification data are reference values.

MONITOR ITEM	CONDITION		SPECIFICATION
EGR PO RECOPY	● Engine: After warming up ● Air conditioner switch: OFF ● Shift lever: Neutral position ● No load	Idle	Approximately -50 %
EGR/V OPN REEF	● Engine: After warming up ● Air conditioner switch: OFF ● Shift lever: Neutral position ● No load	Idle	Approximately -50 %
EGR POS SE VO	● Engine: After warming up ● Air conditioner switch: OFF ● Shift lever: Neutral position ● No load	Idle	Approximately 3.56 V

On Board Diagnosis Logic

BBS0045F

DTC No.	Trouble diagnosis name	Possible cause
P0400	EGR VOLUME CONTROL VALVE CIRCUIT ● 1.DEF: Parameter at minimum level ● 2.DEF: Parameter at maximum level ● 3.DEF: Inconsistency ● 4.DEF: Valve jammed ● 5.DEF: Valve clogged	● Harness or connectors (The EGR volume control valve circuit is open or shorted.) ● EGR volume control valve stuck ● EGR volume control valve control position sensor ● EGR passage clogged

NOTE:

- **Conditions for applying the diagnostic procedure to the stored DTCs:**
  The DTC is declared present with engine running.
- **Special notes:**
  - If this DTC is present, the engine will be unsteady, with popssible stalling. Starting malfunctions, or even impossible when cold.
  - **Malfunction indicator (Red) lights up.**
  - **Malfunction indicator (Yellow) lights up.**

Wiring Diagram

BBS0045H

EC-EGRC/V-01

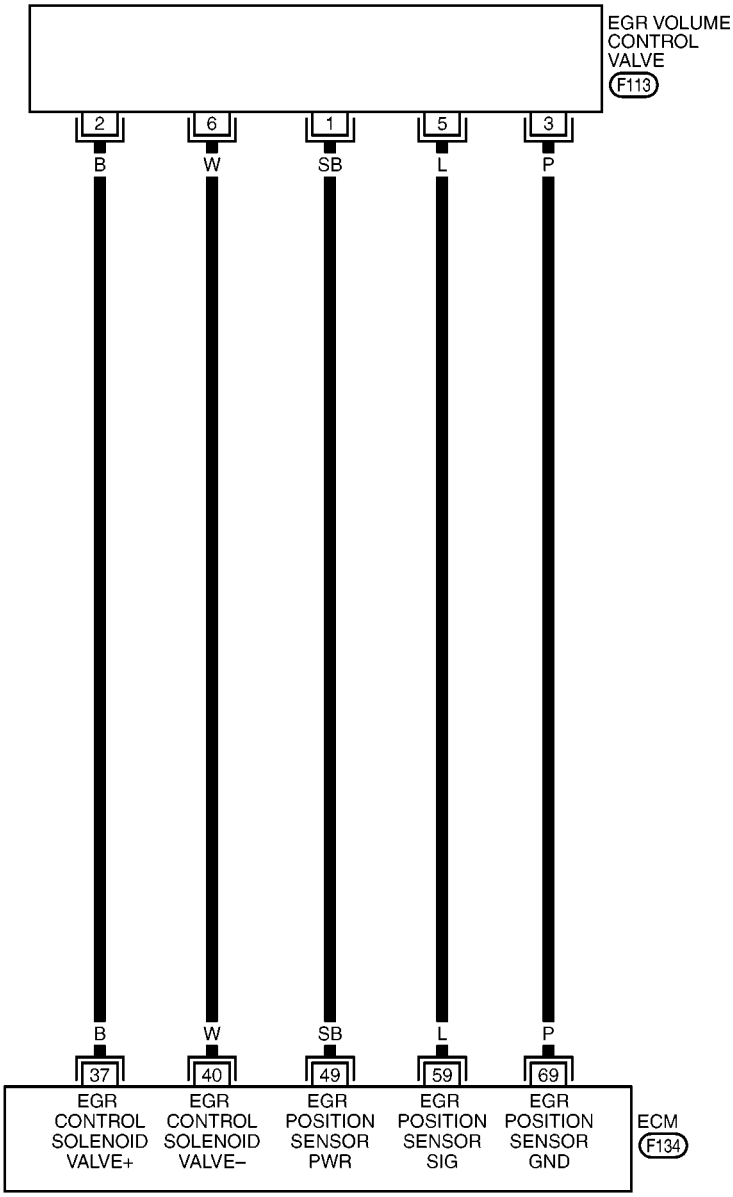

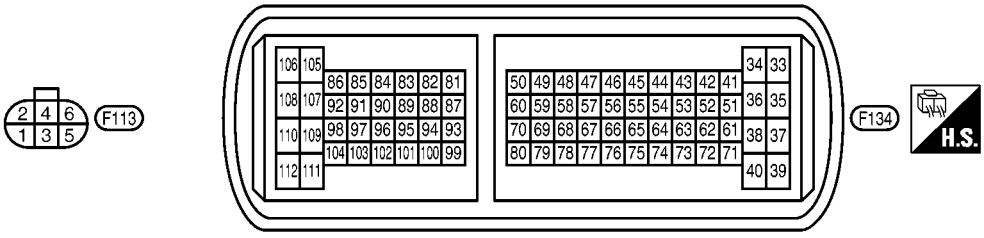

MBWA1562E

Specification data are reference values and are measured between each terminal and ground.

CAUTION:

Do not use ECM ground terminals when measuring input/output voltage. Doing so may result in damage to the ECM's transistor. Use a ground other than ECM terminals, such as the ground.

TERMINAL NO.	WIRE COLOR	ITEM	CONDITION	DATA (DC Voltage and Pulse Signal)
37	B	EGR volume control valve	**[Engine is running]** ● **Warm-up condition** ● Idle speed	Approximately 1.1V
			[Engine is running] ● **Warm-up condition** ● Engine speed: 2,000 rpm	Approximately 0.78V
40	W	EGR volume control valve	**[Engine is running]** ● **Warm-up condition** ● Idle speed	Approximately 0.7 - 1.9
			[Engine is running] ● **Warm-up condition** ● Engine speed: 2,000 rpm	Approximately 1.5 - 1.9V
49	SB	Sensor power supply (EGR volume control valve control position sensor)	**[Ignition switch ON]**	Approximately 5.0V
59	L	EGR volume control valve control position sensor	**[Engine is running]** ● **Warm-up condition** ● Idle speed	Approximately 4.1V
			[Engine is running] ● **Warm-up condition** ● Engine speed: 2,000 rpm	Approximately 3.3V
69	P	Sensor ground (EGR volume control valve control position sensor)	**[Engine is running]** ● **Warm-up condition** ● Idle speed	Approximately 0.5V

Diagnostic Procedure

BBS0045I

1. CHECK EGR VOLUME CONTROL VALVE CONTROL CIRCUIT

1. Turn ignition switch OFF.
2. Disconnect EGR volume control valve (1) harness connector.
- Brake fluid reservoir (2)
3. Disconnect ECM harness connector.
4. Check harness continuity between ECM terminals and EGR volume control valve terminals as follows.
   Refer to Wiring Diagram.

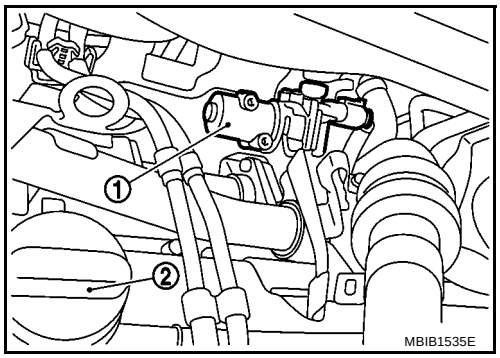

ECM terminal	EGR volume control valve terminal
37	2
40	6
49	1
59	5
69	3

Continuity should exist.

5. Also check harness for short to ground and short to power.

OK or NG

OK >> GO TO 2.
NG >> Repair open circuit or short to ground or short to power in harness or connectors.

2. CHECK EGR VOLUME CONTROL VALVE

Refer to EC-1799, "Component Inspection" .

OK or NG

OK >> GO TO 3.
NG >> Replace EGR volume control valve.

3. CHECK EGR VOLUME CONTROL VALVE CONTROL POSITION SENSOR

Refer to EC-1799, "Component Inspection" .

OK or NG

OK >> GO TO 4.
NG >> Replace EGR volume control valve.

4. CHECK EGR PASSAGE

Check the following for clogging and cracks.

- EGR tube
- EGR hose
- EGR cooler

OK or NG

OK >> GO TO 5.
NG >> Repair or replace EGR passage.

5. CHECK INTERMITTENT INCIDENT

Refer to EC-1697, "TROUBLE DIAGNOSIS FOR INTERMITTENT INCIDENT" .

>> **INSPECTION END**

DTC P0403 EGR VOLUME CONTROL VALVE

PFP:14710

CONSULT-II Reference Value in Data Monitor Mode

BBS0045M

Specification data are reference values.

MONITOR ITEM	CONDITION		SPECIFICATION
EGR PO RECOPY	● Engine: After warming up ● Air conditioner switch: OFF ● Shift lever: Neutral position ● No load	Idle	Approximately -50 %
EGR/V OPN REEF	● Engine: After warming up ● Air conditioner switch: OFF ● Shift lever: Neutral position ● No load	Idle	Approximately -50 %
EGR POS SE VO	● Engine: After warming up ● Air conditioner switch: OFF ● Shift lever: Neutral position ● No load	Idle	Approximately 3.56 V

On Board Diagnosis Logic

BBS0045N

DTC No.	Trouble diagnosis name	Possible cause
P0403	EGR VOLUME CONTROL VALVE CIRCUIT ● CC.1: Short circuit to +12V ● CO.0: Open circuit or short circuit to ground ● CO: Open circuit ● 1.DEF: Overheat detection	● Harness or connectors (The EGR volume control valve circuit is open or shorted.) ● EGR volume control valve stuck closed ● EGR volume control valve control positiom sensor

NOTE:

- **Conditions for applying the diagnostic procedure to the stored DTCs:**
  The DTC is declared present with engine running at idle speed.
- **Special notes:**
  - If this DTC is present, the engine is difficult to start, or even impossible when cold.
  - **Malfunction indicator (Red) lights up.**
  - **Malfunction indicator (Yellow) lights up.**

Wiring Diagram

BBS0045P

EC-EGRC/V-01

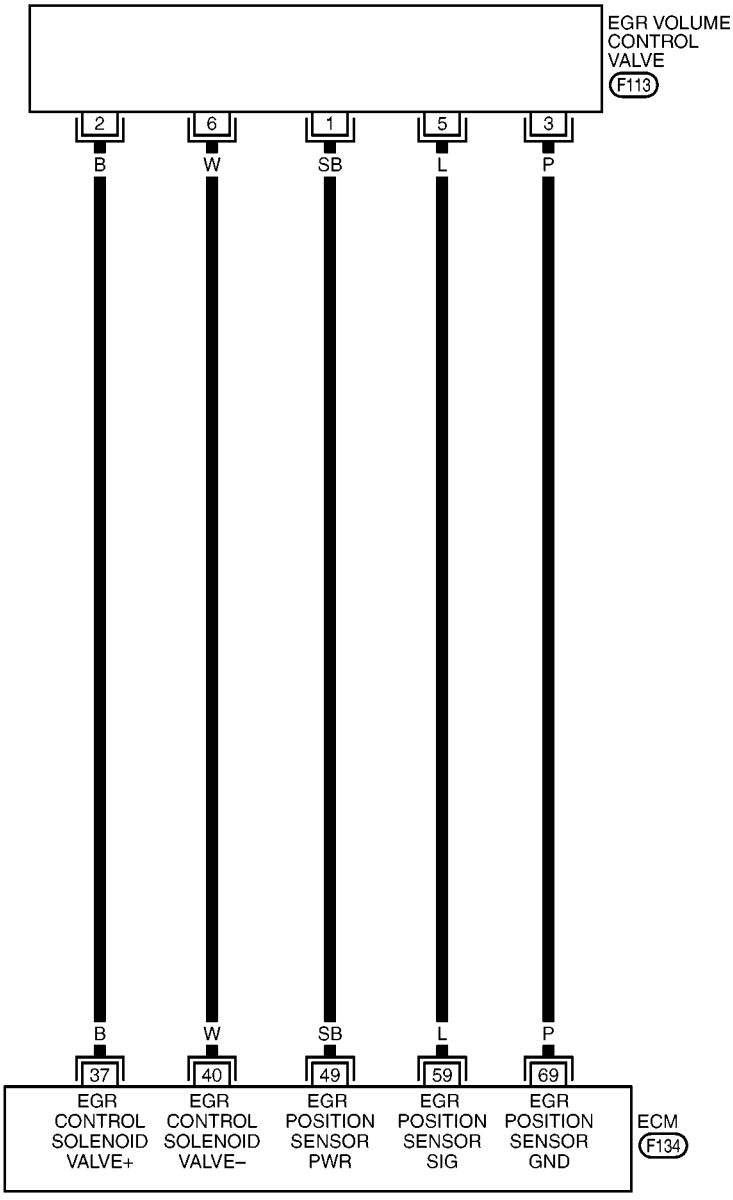

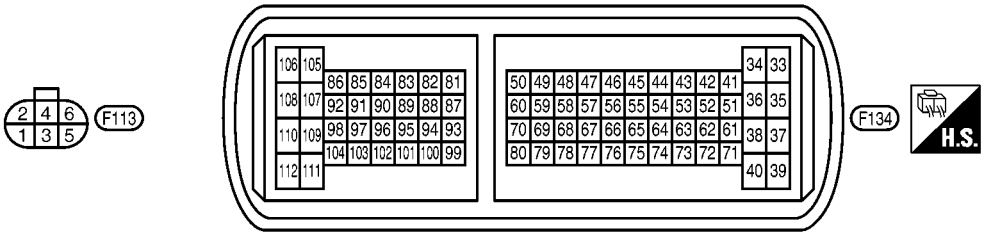

MBWA1562E

Specification data are reference values and are measured between each terminal and ground.

CAUTION:

Do not use ECM ground terminals when measuring input/output voltage. Doing so may result in damage to the ECM's transistor. Use a ground other than ECM terminals, such as the ground.

TERMINAL NO.	WIRE COLOR	ITEM	CONDITION	DATA (DC Voltage and Pulse Signal)
37	B	EGR volume control valve	**[Engine is running]** ● **Warm-up condition** ● Idle speed	Approximately 1.1V
			[Engine is running] ● **Warm-up condition** ● Engine speed: 2,000 rpm	Approximately 0.78V
40	W	EGR volume control valve	**[Engine is running]** ● **Warm-up condition** ● Idle speed	Approximately 0.7 - 1.9
			[Engine is running] ● **Warm-up condition** ● Engine speed: 2,000 rpm	Approximately 1.5 - 1.9V
49	SB	Sensor power supply (EGR volume control valve control position sensor)	**[Ignition switch ON]**	Approximately 5.0V
59	L	EGR volume control valve control position sensor	**[Engine is running]** ● **Warm-up condition** ● Idle speed	Approximately 4.1V
			[Engine is running] ● **Warm-up condition** ● Engine speed: 2,000 rpm	Approximately 3.3V
69	P	Sensor ground (EGR volume control valve control position sensor)	**[Engine is running]** ● **Warm-up condition** ● Idle speed	Approximately 0.5V

Diagnostic Procedure

BBS0045Q

1. CHECK EGR VOLUME CONTROL VALVE CONTROL CIRCUIT

1. Turn ignition switch OFF.
2. Disconnect EGR volume control valve (1) harness connector.
- Brake fluid reservoir (2)
3. Disconnect ECM harness connector.
4. Check harness continuity between ECM terminals and EGR volume control valve terminals as follows.
   Refer to Wiring Diagram.

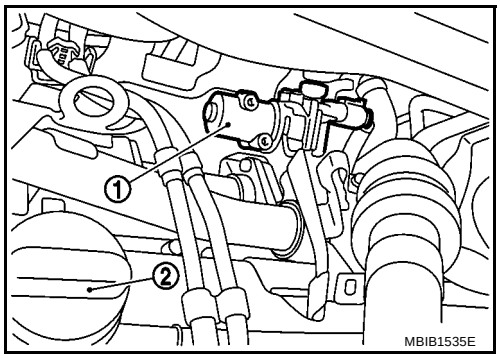

ECM terminal	EGR volume control valve terminal
37	2
40	6
49	1
59	5
69	3

Continuity should exist.

5. Also check harness for short to ground and short to power.

OK or NG

OK >> GO TO 2.
NG >> Repair open circuit or short to ground or short to power in harness or connectors.

2. CHECK EGR VOLUME CONTROL VALVE

Refer to EC-1799, "Component Inspection" .

OK or NG

OK >> GO TO 3.
NG >> Replace EGR volume control valve.

3. CHECK EGR VOLUME CONTROL VALVE CONTROL POSITION SENSOR

Refer to EC-1799, "Component Inspection" .

OK or NG

OK >> GO TO 4.
NG >> Replace EGR volume control valve.

4. CHECK EGR PASSAGE

Check the following for clogging and cracks.

- EGR tube
- EGR hose
- EGR cooler

OK or NG

OK >> GO TO 5.
NG >> Repair or replace EGR passage.

5. CHECK INTERMITTENT INCIDENT

Refer to EC-1697, "TROUBLE DIAGNOSIS FOR INTERMITTENT INCIDENT" .

>> **INSPECTION END**

Component Inspection

BBS0045R

EGR VOLUME CONTROL VALVE

1. Disconnect EGR volume control valve (1) harness connector.
   - Brake fluid reservoir (2)
2. Check resistance between EGR volume control valve terminals 2 and 6.

   Resistance: 8 ± 2.3 Ω at 25°C (77°F)

   If NG, replace EGR volume control valve.

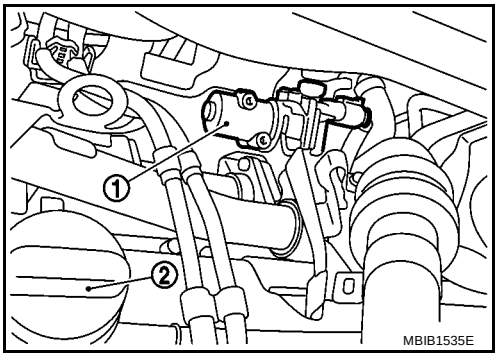

EGR VOLUME CONTROL VALVE CONTROL POSITION SENSOR

1. Disconnect EGR volume control valve (1) harness connector.
   - Brake fluid reservoir (2)
2. Check resistance between EGR volume control valve terminals 1 and 3.

   Continuity should exist.

   If NG, replace EGR volume control valve.

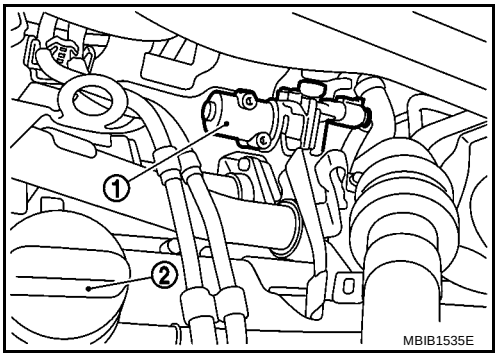

Removal and Installation

BBS0045S

EGR VOLUME CONTROL VALVE

Refer to EM-251, "EGR UNIT" .

DTC P0409 EGR VOLUME CONTROL VALVE CONTROL POSITION SENSOR

PFP:22693

CONSULT-II Reference Value in Data Monitor Mode

BBS0047K

Specification data are reference values.

MONITOR ITEM	CONDITION		SPECIFICATION
EGR PO RECOPY	● Engine: After warming up ● Air conditioner switch: OFF ● Shift lever: Neutral position ● No load	Idle	Approximately -50 %
EGR/V OPN REEF	● Engine: After warming up ● Air conditioner switch: OFF ● Shift lever: Neutral position ● No load	Idle	Approximately -50 %
EGR POS SE VO	● Engine: After warming up ● Air conditioner switch: OFF ● Shift lever: Neutral position ● No load	Idle	Approximately 3.56 V

On Board Diagnosis Logic

BBS0047L

DTC No.	Trouble diagnosis name	Possible Cause
P0409	EGR VOLUME CONTROL VALVE CONTROL POSITION SENSOR CIRCUIT ● 1.DEF: Above maximum threshold ● 1.DEF: Below minimum threshold	● Harness or connectors (The EGR volume control valve control position sensor circuit is open or shorted.) ● EGR volume control valve control position sensor ● EGR volume control valve stuck

NOTE:

- **If this DTC is displayed with DTC P0641, first perform the trouble diagnosis for DTC P0641. Refer to EC-1830, "DTC P0641 SENSOR POWER SUPPLY" .**

Wiring Diagram

BBS0047N

EC-EGRC/V-01

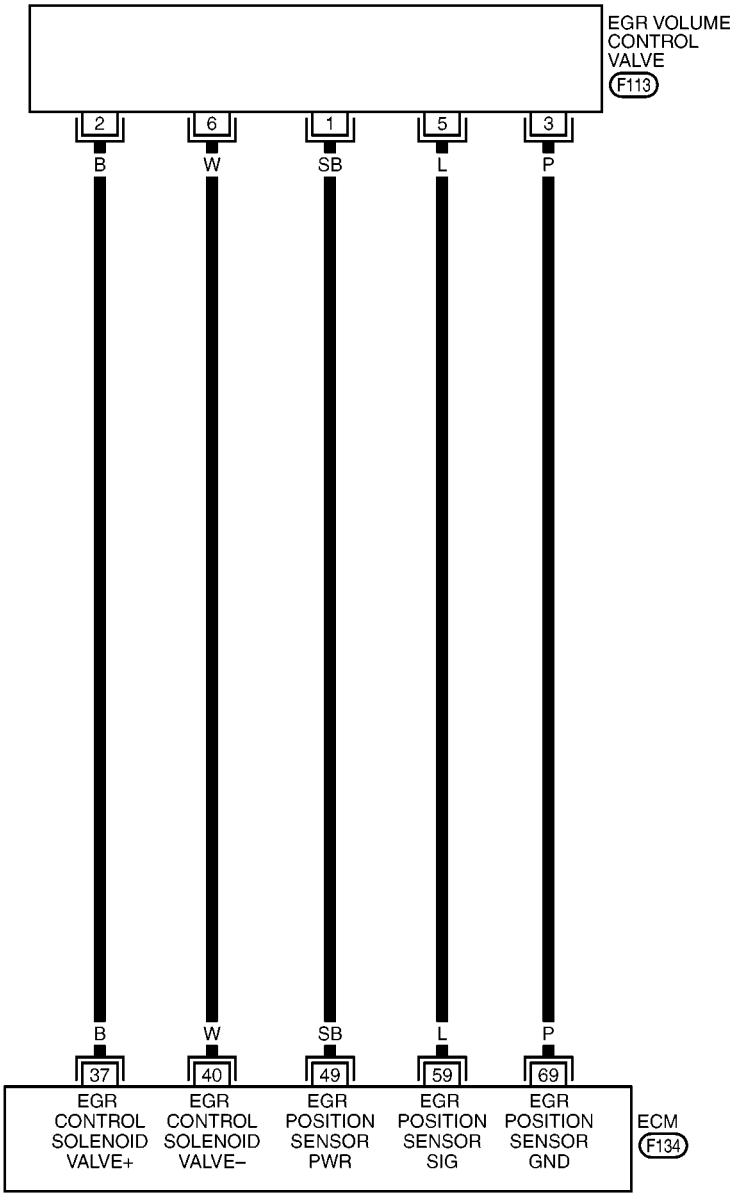

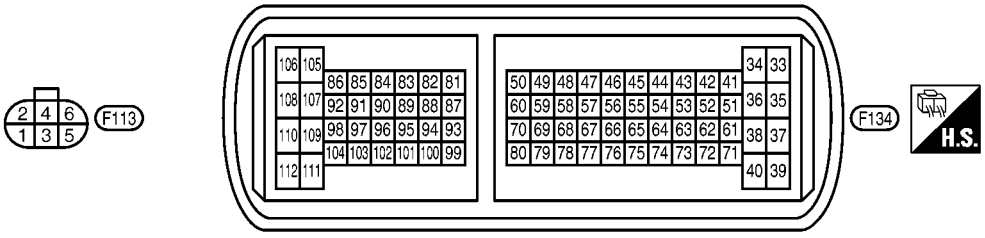

MBWA1562E

Specification data are reference values and are measured between each terminal and ground.

CAUTION:

Do not use ECM ground terminals when measuring input/output voltage. Doing so may result in damage to the ECM's transistor. Use a ground other than ECM terminals, such as the ground.

TERMINAL NO.	WIRE COLOR	ITEM	CONDITION	DATA (DC Voltage and Pulse Signal)
37	B	EGR volume control valve	**[Engine is running]** ● **Warm-up condition** ● Idle speed	Approximately 1.1V
			[Engine is running] ● **Warm-up condition** ● Engine speed: 2,000 rpm	Approximately 0.78V
40	W	EGR volume control valve	**[Engine is running]** ● **Warm-up condition** ● Idle speed	Approximately 0.7 - 1.9
			[Engine is running] ● **Warm-up condition** ● Engine speed: 2,000 rpm	Approximately 1.5 - 1.9V
49	SB	Sensor power supply (EGR volume control valve control position sensor)	**[Ignition switch ON]**	Approximately 5.0V
59	L	EGR volume control valve control position sensor	**[Engine is running]** ● **Warm-up condition** ● Idle speed	Approximately 4.1V
			[Engine is running] ● **Warm-up condition** ● Engine speed: 2,000 rpm	Approximately 3.3V
69	P	Sensor ground (EGR volume control valve control position sensor)	**[Engine is running]** ● **Warm-up condition** ● Idle speed	Approximately 0.5V

Diagnostic Procedure

BBS0047O

1. CHECK EGR VOLUME CONTROL VALVE CONTROL CIRCUIT

1. Turn ignition switch OFF.
2. Disconnect EGR volume control valve (1) harness connector.
- Brake fluid reservoir (2)
3. Disconnect ECM harness connector.
4. Check harness continuity between ECM terminals and EGR volume control valve terminals as follows.
   Refer to Wiring Diagram.

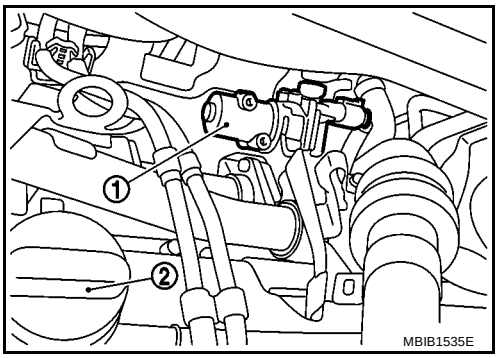

ECM terminal	EGR volume control valve terminal
37	2
40	6
49	1
59	5
69	3

Continuity should exist.

5. Also check harness for short to ground and short to power.

OK or NG

OK >> GO TO 2.
NG >> Repair open circuit or short to ground or short to power in harness or connectors.

2. CHECK EGR VOLUME CONTROL VALVE

Refer to EC-1804, "Component Inspection" .

OK or NG

OK >> GO TO 3.
NG >> Replace EGR volume control valve.

3. CHECK EGR VOLUME CONTROL VALVE CONTROL POSITION SENSOR

Refer to EC-1804, "Component Inspection" .

OK or NG

OK >> GO TO 4.
NG >> Replace EGR volume control valve.

4. CHECK EGR PASSAGE

Check the following for clogging and cracks.

- EGR tube
- EGR hose
- EGR cooler

OK or NG

OK >> GO TO 5.
NG >> Repair or replace EGR passage.

5. CHECK INTERMITTENT INCIDENT

Refer to EC-1697, "TROUBLE DIAGNOSIS FOR INTERMITTENT INCIDENT" .

>> **INSPECTION END**

Component Inspection

BBS004UR

EGR VOLUME CONTROL VALVE

1. Disconnect EGR volume control valve (1) harness connector.
   - Brake fluid reservoir (2)
2. Check resistance between EGR volume control valve terminals 2 and 6.

   Resistance: 8 ± 2.3 Ω at 25°C (77°F)

   If NG, replace EGR volume control valve.

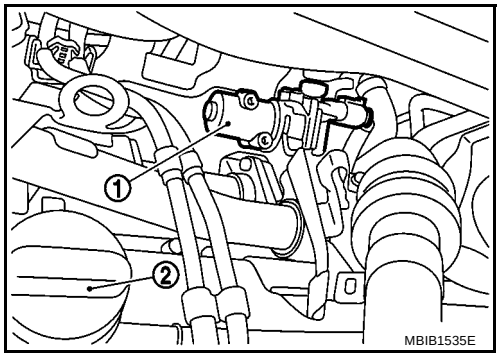

EGR VOLUME CONTROL VALVE CONTROL POSITION SENSOR

1. Disconnect EGR volume control valve (1) harness connector.
   - Brake fluid reservoir (2)
2. Check resistance between EGR volume control valve terminals 1 and 3.

   Continuity should exist.

   If NG, replace EGR volume control valve.

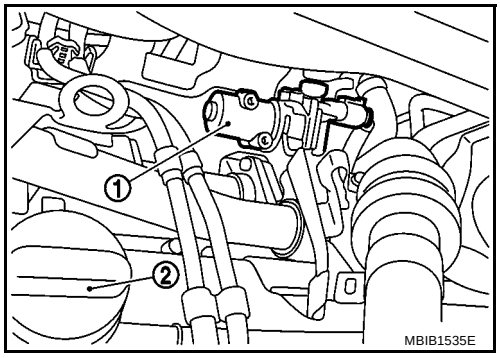

Removal and Installation

BBS004US

EGR VOLUME CONTROL VALVE

Refer to EM-251, "EGR UNIT" .

DTC P0487 EGR VOLUME CONTROL VALVE CONTROL POSITION SENSOR

PFP:22693

CONSULT-II Reference Value in Data Monitor Mode

BBS0047R

Specification data are reference values.

MONITOR ITEM	CONDITION		SPECIFICATION
EGR PO RECOPY	● Engine: After warming up ● Air conditioner switch: OFF ● Shift lever: Neutral position ● No load	Idle	Approximately -50 %
EGR/V OPN REEF	● Engine: After warming up ● Air conditioner switch: OFF ● Shift lever: Neutral position ● No load	Idle	Approximately -50 %
EGR POS SE VO	● Engine: After warming up ● Air conditioner switch: OFF ● Shift lever: Neutral position ● No load	Idle	Approximately 3.56 V

On Board Diagnosis Logic

BBS0047S

DTC No.	Trouble diagnosis name	Possible Cause
P0487	EGR VOLUME CONTROL VALVE CONTROL POSITION SENSOR CIRCUIT ● CO.0: Short circuit to ground or open circuit ● CC.1: Short circuit to +12V	● Harness or connectors (The EGR volume control valve control position sensor circuit is open or shorted.) ● EGR volume control valve control position sensor ● EGR volume control valve stuck

NOTE:

- **If this DTC is displayed with DTC P0641, first perform the trouble diagnosis for DTC P0641. Refer to EC-1830, "DTC P0641 SENSOR POWER SUPPLY" .**
- **Special notes:**
  - **Malfunction indicator (Yellow) lights up.**

Wiring Diagram

BBS0047U

EC-EGRC/V-01

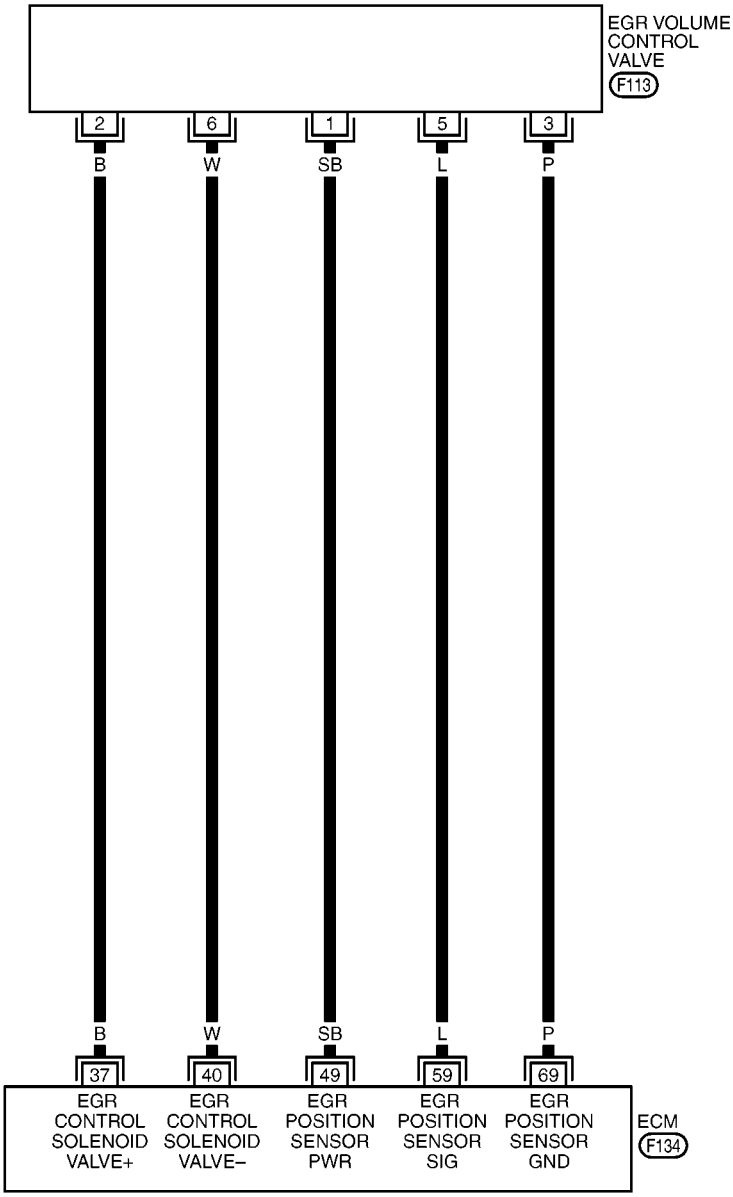

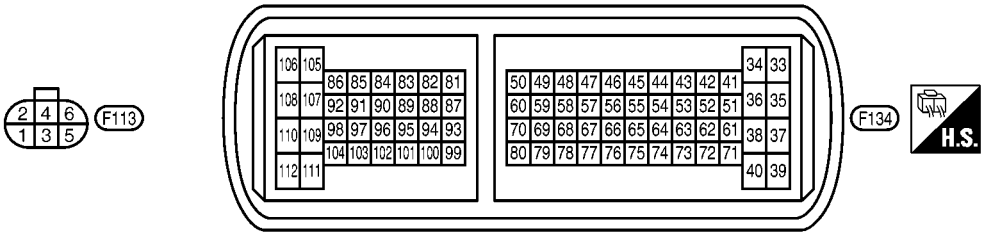

MBWA1562E

Specification data are reference values and are measured between each terminal and ground.

CAUTION:

Do not use ECM ground terminals when measuring input/output voltage. Doing so may result in damage to the ECM's transistor. Use a ground other than ECM terminals, such as the ground.

TERMINAL NO.	WIRE COLOR	ITEM	CONDITION	DATA (DC Voltage and Pulse Signal)
37	B	EGR volume control valve	**[Engine is running]** ● **Warm-up condition** ● Idle speed	Approximately 1.1V
			[Engine is running] ● **Warm-up condition** ● Engine speed: 2,000 rpm	Approximately 0.78V
40	W	EGR volume control valve	**[Engine is running]** ● **Warm-up condition** ● Idle speed	Approximately 0.7 - 1.9
			[Engine is running] ● **Warm-up condition** ● Engine speed: 2,000 rpm	Approximately 1.5 - 1.9V
49	SB	Sensor power supply (EGR volume control valve control position sensor)	**[Ignition switch ON]**	Approximately 5.0V
59	L	EGR volume control valve control position sensor	**[Engine is running]** ● **Warm-up condition** ● Idle speed	Approximately 4.1V
			[Engine is running] ● **Warm-up condition** ● Engine speed: 2,000 rpm	Approximately 3.3V
69	P	Sensor ground (EGR volume control valve control position sensor)	**[Engine is running]** ● **Warm-up condition** ● Idle speed	Approximately 0.5V

Diagnostic Procedure

BBS0047V

1. CHECK EGR VOLUME CONTROL VALVE CONTROL CIRCUIT

1. Turn ignition switch OFF.
2. Disconnect EGR volume control valve (1) harness connector.
- Brake fluid reservoir (2)
3. Disconnect ECM harness connector.
4. Check harness continuity between ECM terminals and EGR volume control valve terminals as follows.
   Refer to Wiring Diagram.

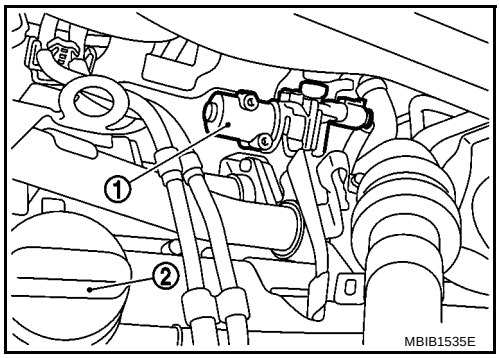

ECM terminal	EGR volume control valve terminal
37	2
40	6
49	1
59	5
69	3

Continuity should exist.

5. Also check harness for short to ground and short to power.

OK or NG

OK >> GO TO 2.
NG >> Repair open circuit or short to ground or short to power in harness or connectors.

2. CHECK EGR VOLUME CONTROL VALVE

Refer to EC-1809, "Component Inspection" .

OK or NG

OK >> GO TO 3.
NG >> Replace EGR volume control valve.

3. CHECK EGR VOLUME CONTROL VALVE CONTROL POSITION SENSOR

Refer to EC-1809, "Component Inspection" .

OK or NG

OK >> GO TO 4.
NG >> Replace EGR volume control valve.

4. CHECK EGR PASSAGE

Check the following for clogging and cracks.

- EGR tube
- EGR hose
- EGR cooler

OK or NG

OK >> GO TO 5.
NG >> Repair or replace EGR passage.

5. CHECK INTERMITTENT INCIDENT

Refer to EC-1697, "TROUBLE DIAGNOSIS FOR INTERMITTENT INCIDENT" .

>> **INSPECTION END**

Component Inspection

BBS004UT

EGR VOLUME CONTROL VALVE

1. Disconnect EGR volume control valve (1) harness connector.
   - Brake fluid reservoir (2)
2. Check resistance between EGR volume control valve terminals 2 and 6.

   Resistance: 8 ± 2.3 Ω at 25°C (77°F)

   If NG, replace EGR volume control valve.

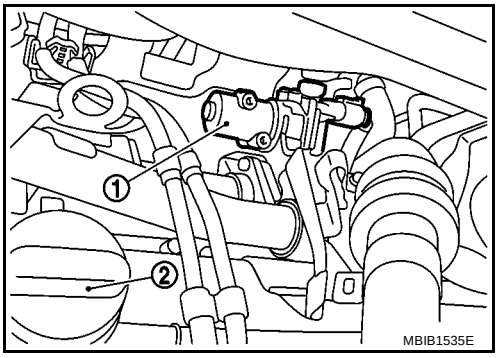

EGR VOLUME CONTROL VALVE CONTROL POSITION SENSOR

1. Disconnect EGR volume control valve (1) harness connector.
   - Brake fluid reservoir (2)
2. Check resistance between EGR volume control valve terminals 1 and 3.

   Continuity should exist.

   If NG, replace EGR volume control valve.

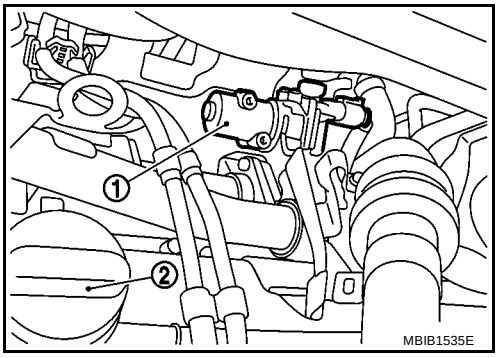

Removal and Installation

BBS004UU

EGR VOLUME CONTROL VALVE

Refer to EM-251, "EGR UNIT" .

DTC P0500 VSS

PFP:32702

Description

BBS0045T

The vehicle speed signal is sent to the combination meter from the “ABS actuator and electric unit (control unit)” by CAN communication line. The combination meter then sends a signal to the ECM by CAN communication line.

On Board Diagnosis Logic

BBS0045U

DTC No.	Trouble diagnosis name	Possible cause
P0500	VEHICLE SPEED INFORMATION	● Harness or connectors (The CAN communication line is open or shorted) ● Harness or connectors (The vehicle speed signal circuit is open or shorted) ● Wheel sensor ● Combination meter ● ABS actuator and electric unit (control unit)

Diagnostic Procedure

BBS0045X

1. CHECK DTC WITH “ABS ACTUATOR AND ELECTRIC UNIT (CONTROL UNIT)”

Refer to BRC-8, "TROUBLE DIAGNOSIS" or BRC-49, "TROUBLE DIAGNOSIS" .

OK or NG

OK >> GO TO 2.
NG >> Repair or replace.

2. CHECK COMBINATION METER

Refer to DI-4, "COMBINATION METERS" .

>> **INSPECTION END**

DTC P0530 REFRIGERANT PRESSURE SENSOR

PFP:22693

Component Description

BBS0045Y

The refrigerant pressure sensor (1) is installed at the condenser of the air conditioner system. The sensor uses an electrostatic volume pressure transducer to convert refrigerant pressure to voltage. The voltage signal is sent to ECM, and ECM controls cooling fan system.

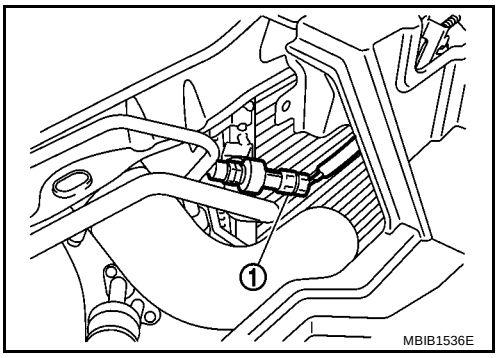

CONSULT-II Reference Value in Data Monitor Mode

BBS0045Z

Specification data are reference values.

MONITOR ITEM	CONDITION		SPECIFICATION
REFGERNT PRSS	● Engine: After warming up ● Air conditioner switch: OFF ● Shift lever: Neutral position ● No load	Idle	Approximately 5.7 bar

On Board Diagnosis Logic

BBS00460

DTC No.	Trouble diagnosis name	Possible cause
P0530	REFRIGERANT PRESSURE SENSOR CIRCUIT ● CO.1: Short circuit to +12V or open circuit ● CC.0: Short circuit to ground	● Harness or connectors (The sensor circuit is open or shorted.) ● Refrigerant pressure sensor

NOTE:

- **If DTC P0530 is displayed with DTC P0641, first perform the trouble diagnosis for DTC P0643.1 Refer to EC-1830, "DTC P0641 SENSOR POWER SUPPLY" .**

Wiring Diagram

BBS00462

EC-RP/SEN-01

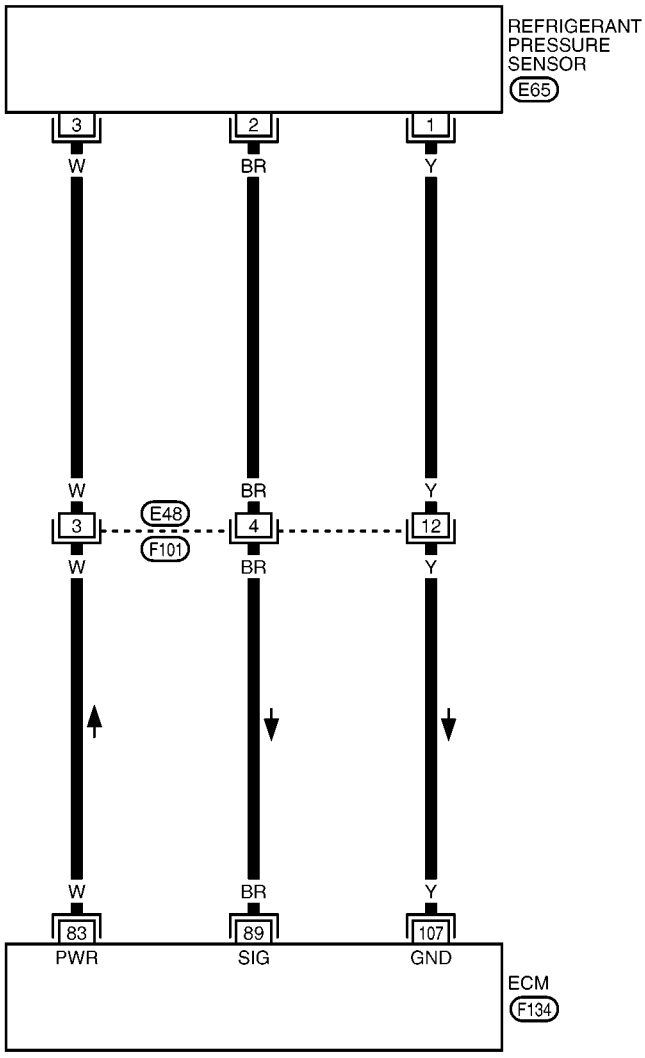

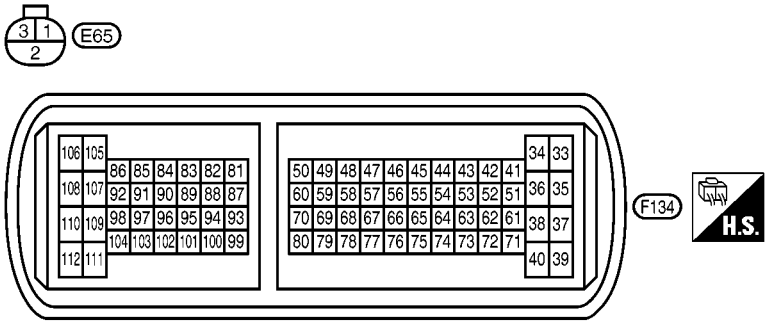

REFER TO THE FOLLOWING.
F101 - SUPER MULTIPLE JUNCTION (SMJ)

MBWA1563E

Specification data are reference values and are measured between each terminal and ground.

CAUTION:
Do not use ECM ground terminals when measuring input/output voltage. Doing so may result in damage to the ECM's transistor. Use a ground other than ECM terminals, such as the ground.

TERMINAL NO.	WIRE COLOR	ITEM	CONDITION	DATA (DC Voltage)
83	W	Sensor power supply (Refrigerant pressure sensor)	**[Ignition switch: ON]**	Approximately 5.0V
89	BR	Refrigerant pressure sensor	**[Engine is running]** ● **Warm-up condition** ● Both A/C switch and blower fan switch: ON (Compressor operates.)	Approximately 2.3V
107	Y	Sensor ground (Refrigerant pressure sensor)	**[Engine is running]** ● **Warm-up condition** ● Idle speed	Approximately 0.3V

Diagnostic Procedure

BBS00463

1. CHECK GROUND CONNECTIONS

1. Turn ignition switch OFF.
2. Loosen and retighten ground screw on the body.
   Refer to EC-1703, "Ground Inspection" .

– Body ground (1)
– Priming pump (2)

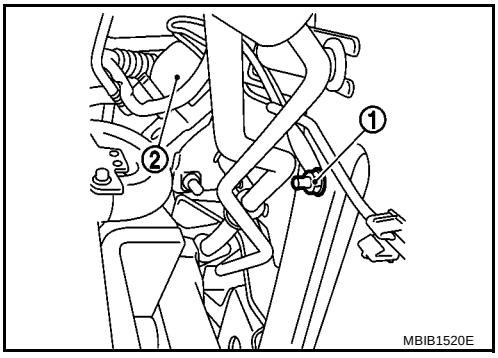

OK or NG

OK >> GO TO 2.
NG >> Repair or replace ground connections.

2. CHECK REFRIGERANT PRESSURE SENSOR POWER SUPPLY CIRCUIT

1. Disconnect refrigerant pressure sensor (1) harness connector.
2. Turn ignition switch ON.

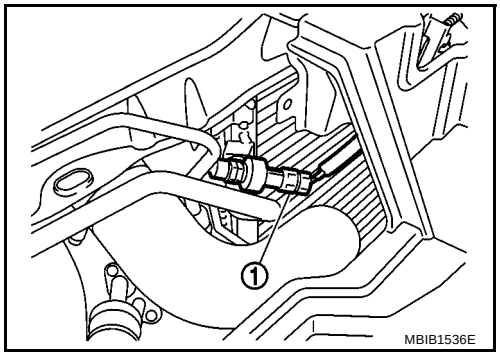

3. Check voltage between refrigerant pressure sensor terminal 3 and ground with CONSULT-II or tester.

Voltage: Approximately 5.0V

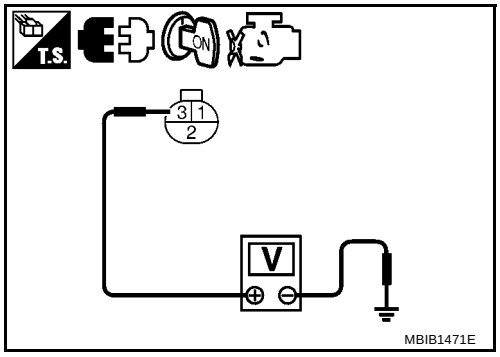

OK or NG

OK >> GO TO 4.
NG >> GO TO 3.

3. DETECT MALFUNCTIONING PART

Check the following.

- Harness connectors E48, F101
- Harness for open or short between ECM and refrigerant pressure sensor

>> Repair harness or connectors.

4. CHECK REFRIGERANT PRESSURE SENSOR GROUND CIRCUIT FOR OPEN AND SHORT

1. Turn ignition switch OFF.
2. Disconnect ECM harness connector.
3. Check harness continuity between refrigerant pressure sensor terminal 1 and ECM terminal 107. Refer to Wiring Diagram.

Continuity should exist.

4. Also check harness for short to ground and short to power.

OK or NG

OK >> GO TO 6.
NG >> GO TO 5.

5. DETECT MALFUNCTIONING PART

Check the following.

- Harness connectors E48, F101
- Harness for open or short between ECM and refrigerant pressure sensor

>> Repair open circuit or short to ground or short to power in harness or connectors.

6. CHECK REFRIGERANT PRESSURE SENSOR INPUT SIGNAL CIRCUIT FOR OPEN AND SHORT

1. Check harness continuity between ECM terminal 89 and refrigerant pressure sensor terminal 2. Refer to Wiring Diagram.

   Continuity should exist.

2. Also check harness for short to ground and short to power.

OK or NG

OK >> GO TO 8.
NG >> GO TO 7.

7. DETECT MALFUNCTIONING PART

Check the following.

- Harness connectors E48, F101
- Harness for open or short between ECM and refrigerant pressure sensor

>> Repair open circuit or short to ground or short to power in harness or connectors.

8. CHECK INTERMITTENT INCIDENT

Refer to EC-1697, "TROUBLE DIAGNOSIS FOR INTERMITTENT INCIDENT" .

OK or NG

OK >> Replace refrigerant pressure sensor.
NG >> Repair or replace.

Removal and Installation

BBS00464

REFRIGERANT PRESSURE SENSOR

Refer to ATC-135, "REFRIGERANT LINES" or MTC-81, "REFRIGERANT LINES" .

DTC P0560 BATTERY VOLTAGE

PFP:22693

On Board Diagnosis Logic

BBS00465

DTC No.	Trouble diagnosis name	Possible cause
P0560	BATTERY VOLTAGE ● 1.DEF: Above maximum threshold ● 2.DEF: Below threshold	● Battery ● Battery terminal ● Alternator ● Incorrect jump starting

NOTE:

- **Conditions for applying the diagnostic procedure to the stored DTCs:**
  The DTC is declared present when the engine is running at above 1,000 rpm.
- **Special notes:**
  - **Malfunction indicator (Red) lights up.**

Wiring Diagram

BBS004U4

EC-ECM/PW-01

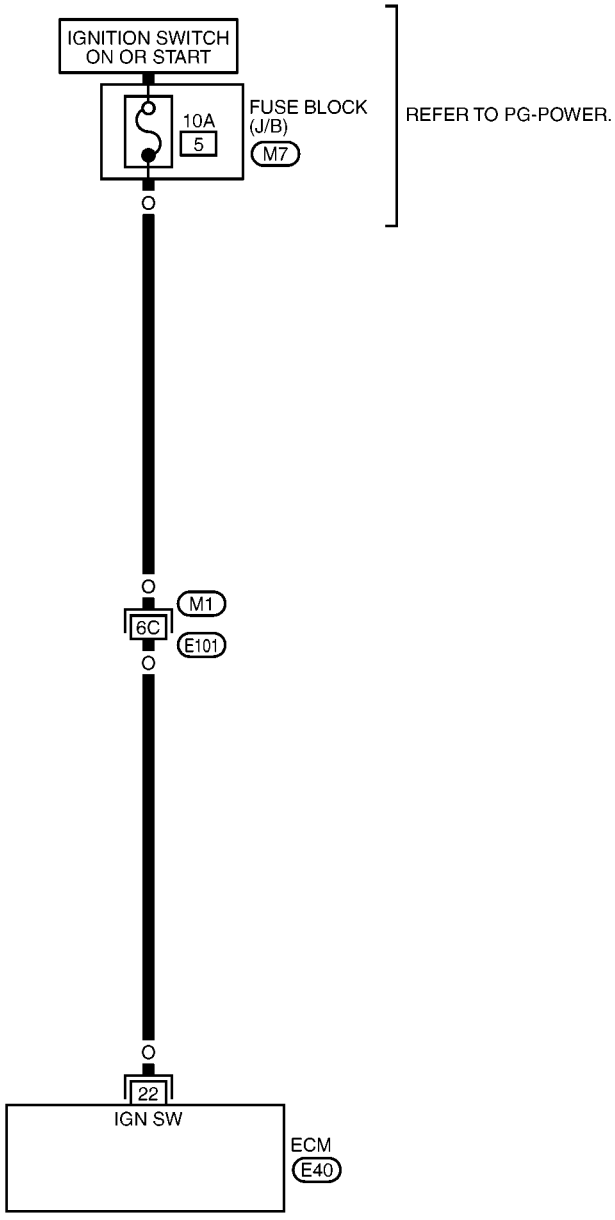

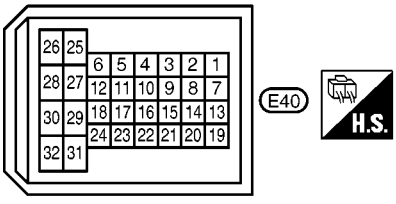

REFER TO THE FOLLOWING.
M1 - SUPER MULTIPLE JUNCTION (SMJ)
M7 - FUSE BLOCK - JUNCTION BOX (J/B)

MBWA1571E

Remarks: Specification data are reference values and are measured between each terminal and ground.

CAUTION:

Do not use ECM ground terminals when measuring input/output voltage. Doing so may result in damage to the ECM's transistor. Use a ground other than ECM terminals, such as the ground.

TERMINAL NO.	WIRE COLOR	ITEM	CONDITION	DATA (DC Voltage and Pulse Signal)
22	O	Ignition switch	**[Ignition switch ON]**	BATTERY VOLTAGE (11 - 14V)

Diagnostic Procedure

BBS00467

1. CHECK BATTERY VOLTAGE

1. Turn ignition switch ON.
2. Check battery voltage.

Voltage: Above 11V

OK or NG

OK >> GO TO 2.
NG >> Recharge the battery.

2. CHECK BATTERY TERMINALS

1. Turn ignition switch OFF.
2. Check battery terminals condition.

OK or NG

OK >> GO TO 3.
NG >> Repair the battery terminals.

3. CHECK BATTERY AND ALTERNATOR

Check that the proper type of battery and type of alternator are installed.
Refer to, SC-5, "BATTERY" and SC-15, "CHARGING SYSTEM" .

OK or NG

OK >> GO TO 4.
NG >> Replace with a proper one.

4. CHECK ECM POWER SUPPLY CIRCUIT

1. Turn ignition switch ON.
2. Check voltage between ECM terminal 22 and groound with CONSULT-II or tester.

Voltage: Above 11V

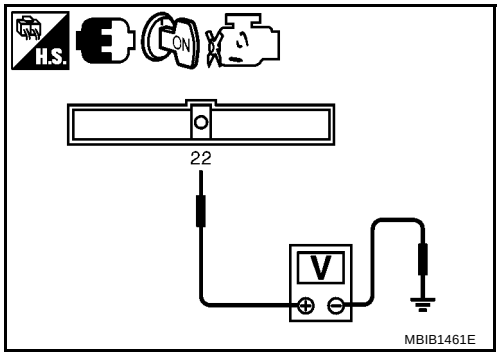

OK or NG

OK >> GO TO 6.
NG >> GO TO 5.

5. DETECT MALFUNCTIONING PART

Check the following.

- Fuse block (J/B) connector M7
- 10A fuse
- Harness connectors M1, E101
- Harness for open or short between ECM and fuse block (J/B)

>> Repair open circuit or short to ground or short to power in harness or connectors.

6. CHECK ELECTRICAL PARTS DAMAGE

Check the following for damage.

- Wiring harness and harness connectors for burn
- Fuses for short

OK or NG

OK >> **INSPECTION END**
NG >> Repair or replace malfunctioning part.

DTC P0571 BRAKE SWITCH

PFP:22693

Description

BBS00468

Brake switch signal is applied to the ECM through the stop lamp switch when the brake pedal is depressed. This signal is used mainly to decrease the engine speed when the vehicle is driving.

On Board Diagnosis Logic

BBS0046A

DTC No.	Trouble diagnosis name	Possible cause
P0571	BRAKE SWITCH CIRCUIT ● CO.0: Open circuit or short circuit to ground ● 1.DEF: Signal absent	● Harness or connectors (Stop lamp switch circuit is open or shorted.) ● Stop lamp switch

NOTE:

- **Conditions for applying the diagnostic procedure to the stored DTCs:**
  The DTC is declared present when the ignition switch is turned ON, when deceleratig or when the brake pedal is depressed.

Wiring Diagram

BBS0046C

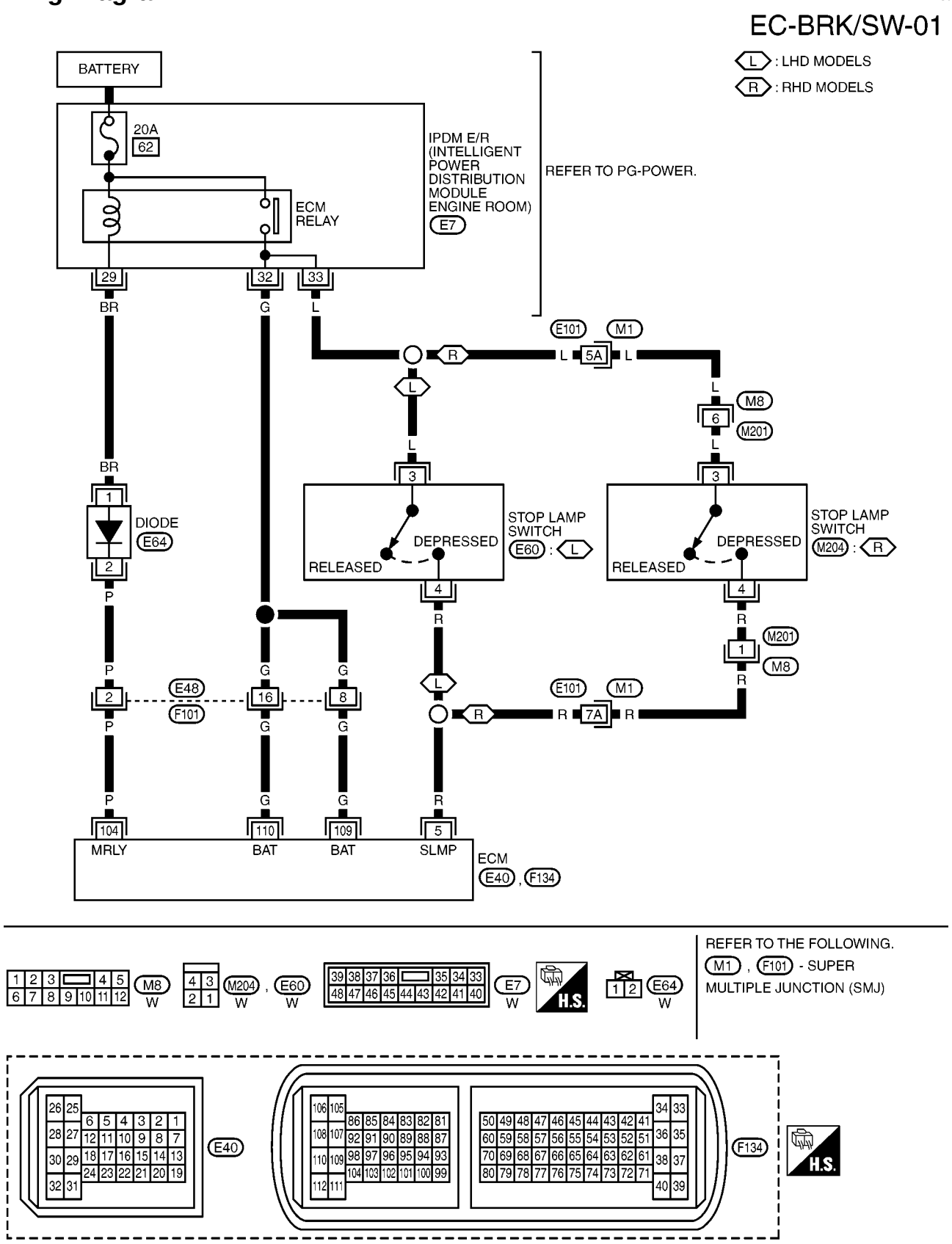

Specification data are reference values and are measured between each terminal and ground.

CAUTION:

Do not use ECM ground terminals when measuring input/output voltage. Doing so may result in damage to the ECM's transistor. Use a ground other than ECM terminals, such as the ground.

TERMINAL NO.	WIRE COLOR	ITEM	CONDITION	DATA (DC Voltage)
5	R	Stop lamp switch	**[Ignition switch: ON]** ● Brake pedal: Fully released	Approximately 0V
			[Ignition switch: ON] ● Brake pedal: Slightly depressed	BATTERY VOLTAGE (11 - 14V)

Diagnostic Procedure

BBS0046D

1. CHECK STOP LAMP SWITCH POWER SUPPLY CIRCUIT

1. Turn ignition switch OFF.
2. Disconnect stop lamp switch (1) harness connector.
- Brake pedal (2)
3. Turn ignition switch ON.

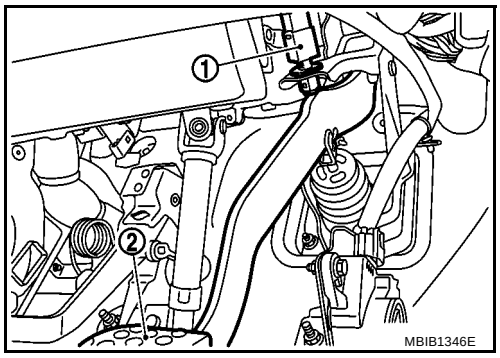

4. Check voltage between stop lamp switch terminal 3 and ground with CONSULT-II or tester.

Voltage: Battery voltage

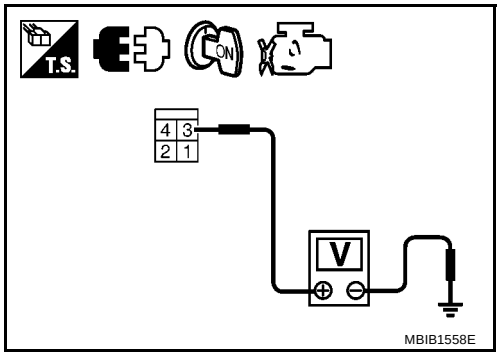

OK or NG

OK >> GO TO 3.
NG >> GO TO 2.

2. DETECT MALFUNCTIONING PART

Check the following.

- Harness connectors M1, E101 (RHD models)
- Harness connectors M8, M201 (RHD models)
- 10A fuse
- Fuse block (J/B) connector E7
- Harness for open and short between stop lamp switch and IPDM E/R

>> Repair open circuit or short to ground or short to power in harness or connectors.

3. CHECK STOP LAMP SWITCH INPUT SIGNAL CIRCUIT FOR OPEN AND SHORT

1. Turn ignition switch OFF.
2. Disconnect ECM harness connector.
3. Check harness continuity between ECM terminal 5 and stop lamp switch terminal 4.
   Refer to Wiring Diagram.

   Continuity should exist.

4. Also check harness for short to ground and short to power.

OK or NG

OK >> GO TO 5.
NG >> GO TO 4.

4. DETECT MALFUNCTIONING PART

Check the following.

- Harness connectors M1, E101 (RHD models)
- Harness connectors M8, M201 (RHD models)
- Harness for open and short between stop lamp switch and ECM

>> Repair open circuit or short to ground or short to power in harness or connectors.

5. CHECK STOP LAMP SWITCH

Refer to EC-1824, "Component Inspection" .

OK or NG

OK >> GO TO 6.
NG >> Replace stop lamp switch.

6. CHECK INTERMITTENT INCIDENT

Refer to EC-1697, "TROUBLE DIAGNOSIS FOR INTERMITTENT INCIDENT" .

>> **INSPECTION END**

Component Inspection

BBS0046E

STOP LAMP SWITCH

1. Disconnect stop lamp switch (1) harness connector.
   - Brake pedal (2)

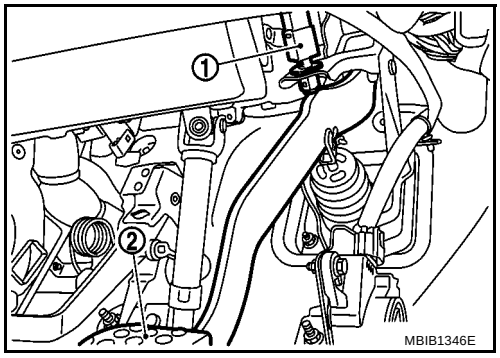

2. Check continuity between stop lamp switch terminals 3 and 4 under the following conditions.

Conditions	Continuity
Brake pedal: Fully released	Should not exist
Brake pedal: Slightly depressed	Should exist

If NG, adjust stop lamp switch installation, refer to BR-6, "BRAKE PEDAL" , and perform step 2 again.

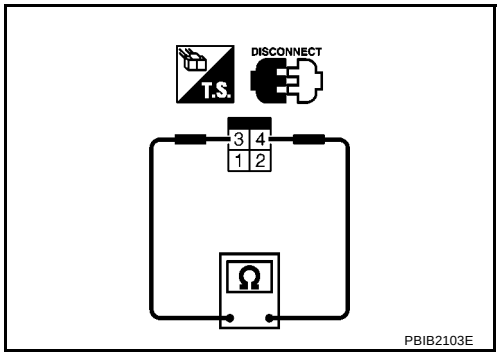

DTC P0604 ECM

PFP:22693

Description

BBS0046F

The ECM consists of a microcomputer and connectors for signal input and output and for power supply. The ECM controls the engine.

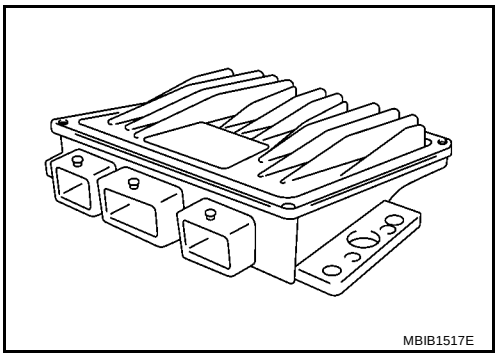

On Board Diagnosis Logic

BBS0046G

DTC No.	Trouble diagnosis name	Possible cause
P0604	ECM MEMORY	● ECM

NOTE:

- **Conditions for applying the diagnostic procedure to the stored DTCs:**
  The DTC is declared present with engine running.
- **Special notes:**
  - If this DTC is present, it is impossible to stop and restart the engine.
  - **Malfunction indicator (Red) lights up.**

Diagnostic Procedure

BBS0046I

1. CHECK INJECTOR ADJUSTMENT VALUE

Check that all injector adjustment values are resistered correctly.

OK or NG

OK >> GO TO 2.

NG >> Enter all injector adjustment values correctly. Refer to EC-1625, "Injector Adjustment Value Registration" .

2. REPLACE ECM

1. Replace ECM.
2. Perform initialization of NATS system and registration of all NATS ignition key IDs. Refer to BL-218, "ECM Re-communicating Function" .
3. Perform Injector Adjustment Value Registration. Refer to EC-1625, "Injector Adjustment Value Registration" .

>> **INSPECTION END**

DTC P0606 ECM

PFP:23710

Description

BBS0046J

The ECM consists of a microcomputer and connectors for signal input and output and for power supply. The ECM controls the engine.

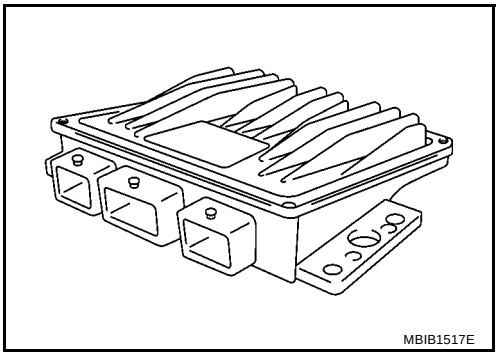

On Board Diagnosis Logic

BBS0046K

DTC No.	Trouble diagnosis name	Possible cause
P0606	ECM ● 1.DEF: Analogue/digital converter ● 2.DEF: Injection calibration data ● 3.DEF: Memory self-test ● 4.DEF: Non refreshed watchdog ● 5.DEF: Interference on the injector control line ● 6.DEF: Watachdog activation	● ECM

NOTE:

- **Special note:**
  - If this DTC is present, the engine speed is set to 1,300 rpm, alouder sound is heard comimg from the engine and **malfunction indiocator (Red) lights up.**
  - When engine is stopped, **malfunction indicator (Red) lights up.**

Diagnostic Procedure

BBS0046M

1. CHECK DTC

Make sure that which malfunction (DTC second line indication) is displayed.

A	1.DEF, 3.DEF, 4.DEF or 6.DEF
B	2.DEF
C	5.DEF

A, B or C

A >> GO TO 2.
B >> GO TO 3.
C >> GO TO 5.

2. REPLACE ECM

1. Replace ECM.
2. Perform initialization of NATS system and registration of all NATS ignition key IDs. Refer to BL-218, "ECM Re-communicating Function" .
3. Perform Injector Adjustment Value Registration. Refer to EC-1625, "Injector Adjustment Value Registration" .

>> **INSPECTION END**

3. CHECK INJECTOR ADJUSTMENT VALUE

Check that all injector adjustment values are resistered correctly.

OK or NG

OK >> GO TO 4.
NG >> Enter all injector adjustment values correctly. Refer to EC-1625, "Injector Adjustment Value Registration" .

4. REPLACE ECM

1. Replace ECM.
2. Perform initialization of NATS system and registration of all NATS ignition key IDs. Refer to BL-218, "ECM Re-communicating Function" .
3. Perform Injector Adjustment Value Registration. Refer to EC-1625, "Injector Adjustment Value Registration" .

>> **INSPECTION END**

5. CHECK INJECTOR CONTROL CIRCUIT

Check injector control circuit for open and short.
Refer to EC-1741, "Wiring Diagram" .

OK or NG

OK >> GO TO 6.
NG >> Repair or replace harness or connectors.

6. REPLACE ECM

1. Replace ECM.
2. Perform initialization of NATS system and registration of all NATS ignition key IDs. Refer to BL-218, "ECM Re-communicating Function" .
3. Perform Injector Adjustment Value Registration. Refer to EC-1625, "Injector Adjustment Value Registration" .

>> **INSPECTION END**

DTC P062F ECM

PFP:22693

Description

BBS004UK

The ECM consists of a microcomputer and connectors for signal input and output and for power supply. The ECM controls the engine.

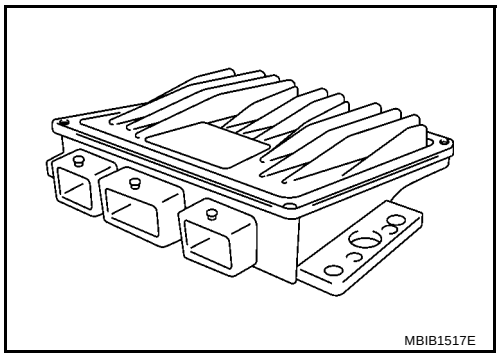

MBIB1517E

On Board Diagnosis Logic

BBS004UL

DTC No.	Trouble diagnosis name	Possible cause
P062F	ECM EEPROM MEMORY ● 1.DEF: Writing to EEPROM memory ● 1.DEF: Reading to EEPROM memory	● ECM

NOTE:

- **Conditions for applying the diagnostic procedure to the stored DTCs:**
  The DTC is declared present with engine running.
- **Special notes:**
  - If this DTC is present, it is impossible to stop and restart the engine.
  - **Malfunction indicator (Red) lights up.**
  - **Malfunction indicator (Yellow) lights up.**

Diagnostic Procedure

BBS004UM

1. CHECK BATTERY CABLE

Check the battery cable for damage.

OK or NG

OK >> GO TO 2.
NG >> Repair or replace.

2. CHECK BATTERY VALTAGE

Check the battery voltage.

Voltage: Above 11V

OK or NG

OK >> GO TO 3.
NG >> Repair or replace.

3. CHECK POWER SUPPLY AND GROUND CIRCUIT

Check the ECM power supply and ground circuit. Perform EC-1699, "Diagnostic Procedure" .

OK or NG

OK >> GO TO 4.
NG >> Repair or replace.

4. REPLACE ECM

1. Replace ECM.
2. Perform initialization of NATS system and registration of all NATS ignition key IDs. Refer to BL-218, "ECM Re-communicating Function" .
3. Perform Injector Adjustment Value Registration. Refer to EC-1625, "Injector Adjustment Value Registration" .

>> **INSPECTION END**

DTC P0641 SENSOR POWER SUPPLY

PFP:22693

On Board Diagnosis Logic

BBS0046N

DTC No.	Trouble diagnosis name	Possible cause
P0641	SENSOR POWER SUPPLY CIRCUIT ● 1.DEF: Parameter at minimum level ● 2.DEF: Parameter at maximum level	● Harness or connectors (The APP sensor 1 power supply circuit is shorted.) (Fuel rail pressure sensor circuit is shorted.) (Turbosharger boost sensor circuit is shorted.) (EGR volume control valve control position sensor circuit is shorted.) (Mass air flow sensor circuit is shorted.) (Refrigerant pressure sensor circuit is shorted.) ● Accelerator pedal position sensor (Accelerator pedal position sensor 1) ● Fuel rail pressure sensor ● Turbosharger boost sensor ● EGR volume control valve control position sensor ● Mass air flow sensor ● Refrigerant pressure sensor

NOTE:

- **If DTC P0641 is displayed with DTC P0100, P0190, P0225, P0235, P0409, P0487, P0530, P0651, P2120, first perform trouble diagnosis for DTC P0641.**
- **Special notes:**
  - If this DTC is present, the engine stops immediately and cannnot be restarted.
  - **Malfuction indicator (Red) lights up.**

Wiring Diagram
LHD MODELS

BBS0046P

EC-SEN/PW-01

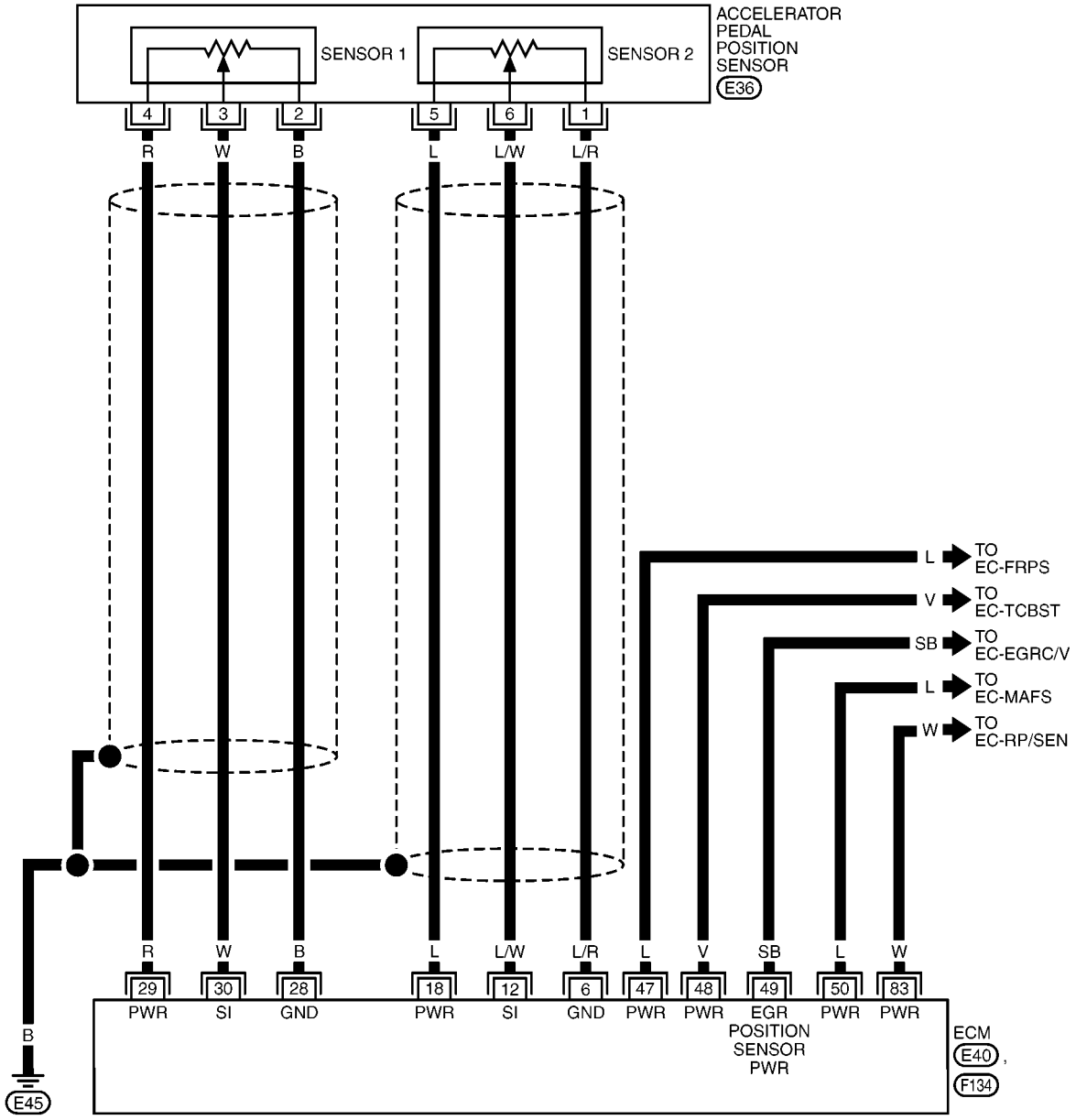

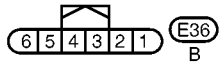

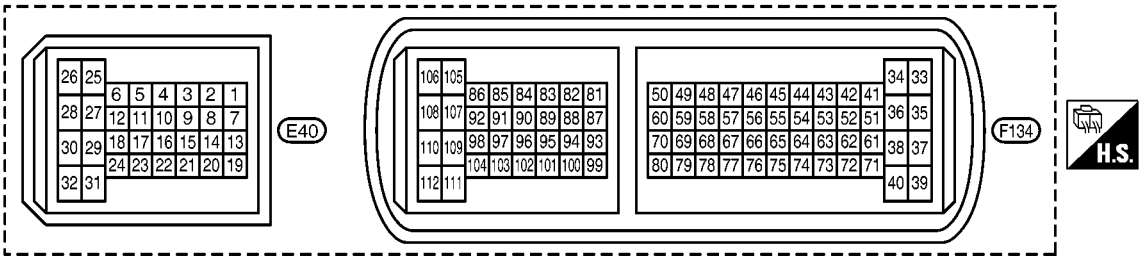

MBWA1573E

Specification data are reference values and are measured between each terminal and ground.

CAUTION:

Do not use ECM ground terminals when measuring input/output voltage. Doing so may result in damage to the ECM's transistor. Use a ground other than ECM terminals, such as the ground.

TERMINAL NO.	WIRE COLOR	ITEM	CONDITION	DATA (DC Voltage and Pulse Signal)
6	L/R	Sensor ground (Accelerator pedal position sensor 2)	**[Engine is running]** ● **Warm-up condition** ● Idle speed	Approximately 0.3V
12	L/W	Accelerator pedal position sensor 2	**[Ignition switch ON]** ● Engine stopped ● Accelerator pedal: Fully released	Approximately 0.4V
			[Ignition switch ON] ● Engine stopped ● Accelerator pedal: Fully depressed	Approximately 2.0V
18	L	Sensor power supply (Accelerator pedal position sensor 2)	**[Ignition switch ON]**	Approximately 4.6V
28	B	Sensor ground (Accelerator pedal position sensor 1)	**[Engine is running]** ● **Warm-up condition** ● Idle speed	Approximately 0.24V
29	R	Sensor power supply (Accelerator pedal position sensor 1)	**[Ignition switch ON]**	Approximately 5.0V
30	W	Accelerator pedal position sensor 1	**[Ignition switch ON]** ● Engine stopped ● Accelerator pedal: Fully released	Approximately 0.76V
			[Ignition switch ON] ● Engine stopped ● Accelerator pedal: Fully depressed	Approximately 4.2V
47	L	Sensor power supply (Fuel rail pressure sensor)	**[Ignition switch ON]**	Approximately 5.0V
48	V	Sensor power supply (Turbocharger boost sensor)	**[Ignition switch ON]**	Approximately 5.0V
49	SB	Sensor power supply (EGR volume control valve position sensor)	**[Ignition switch ON]**	Approximately 5.0V
50	L	Sensor power supply (Mass air flow sensor)	**[Ignition switch ON]**	Approximately 5.0V
83	W	Sensor power supply (Refrigerant pressure sensor)	**[Ignition switch ON]**	Approximately 5.0V

RHD MODELS

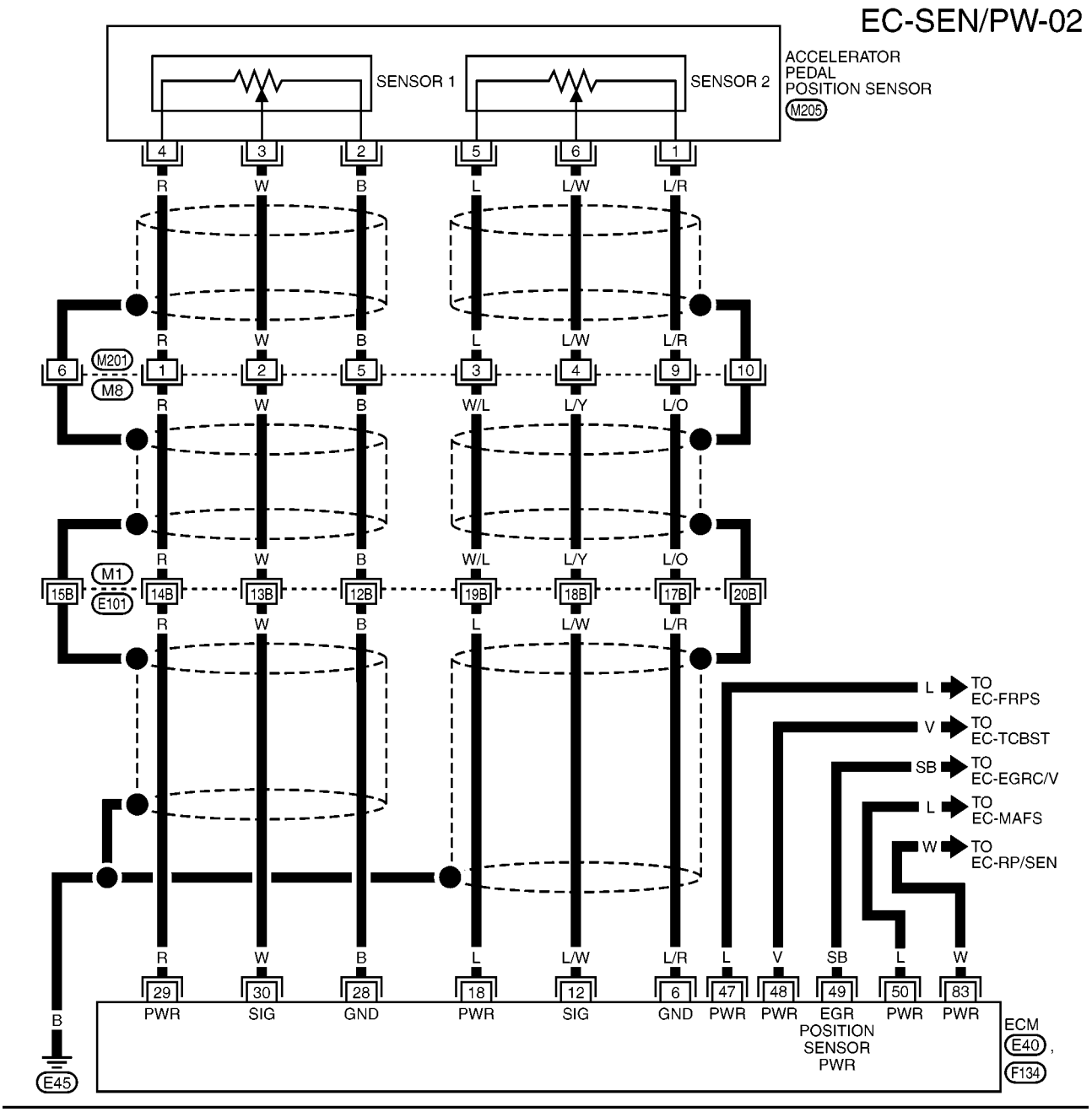

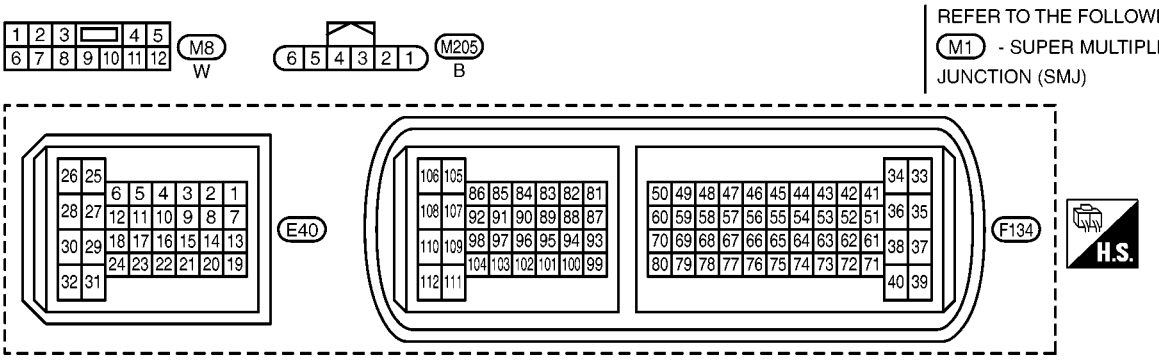

REFER TO THE FOLLOWING.
M1 - SUPER MULTIPLE JUNCTION (SMJ)

MBWA1574E

Specification data are reference values and are measured between each terminal and ground.

CAUTION:

Do not use ECM ground terminals when measuring input/output voltage. Doing so may result in damage to the ECM's transistor. Use a ground other than ECM terminals, such as the ground.

TERMINAL NO.	WIRE COLOR	ITEM	CONDITION	DATA (DC Voltage and Pulse Signal)
6	L/R	Sensor ground (Accelerator pedal position sensor 2)	**[Engine is running]** ● **Warm-up condition** ● Idle speed	Approximately 0.3V
12	L/W	Accelerator pedal position sensor 2	**[Ignition switch ON]** ● Engine stopped ● Accelerator pedal: Fully released	Approximately 0.4V
			[Ignition switch ON] ● Engine stopped ● Accelerator pedal: Fully depressed	Approximately 2.0V
18	L	Sensor power supply (Accelerator pedal position sensor 2)	**[Ignition switch ON]**	Approximately 4.6V
28	B	Sensor ground (Accelerator pedal position sensor 1)	**[Engine is running]** ● **Warm-up condition** ● Idle speed	Approximately 0.24V
29	R	Sensor power supply (Accelerator pedal position sensor 1)	**[Ignition switch ON]**	Approximately 5.0V
30	W	Accelerator pedal position sensor 1	**[Ignition switch ON]** ● Engine stopped ● Accelerator pedal: Fully released	Approximately 0.76V
			[Ignition switch ON] ● Engine stopped ● Accelerator pedal: Fully depressed	Approximately 4.2V
47	L	Sensor power supply (Fuel rail pressure sensor)	**[Ignition switch ON]**	Approximately 5.0V
48	V	Sensor power supply (Turbocharger boost sensor)	**[Ignition switch ON]**	Approximately 5.0V
49	SB	Sensor power supply (EGR volume control valve position sensor)	**[Ignition switch ON]**	Approximately 5.0V
50	L	Sensor power supply (Mass air flow sensor)	**[Ignition switch ON]**	Approximately 5.0V
83	W	Sensor power supply (Refrigerant pressure sensor)	**[Ignition switch ON]**	Approximately 5.0V

Diagnostic Procedure

BBS0046Q

1. CHECK GROUND CONNECTIONS

1. Turn ignition switch OFF.
2. Loosen and retighten ground screw on the body.
   Refer to EC-1703, "Ground Inspection" .

- Body ground (1)
- Priming pump (2)

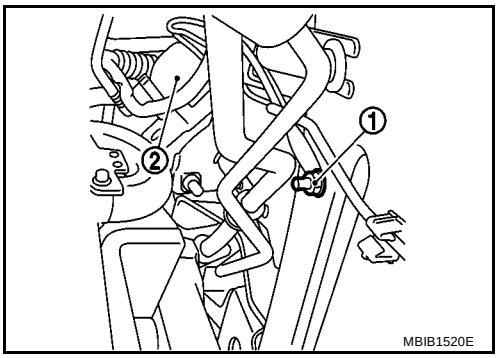

OK or NG

OK >> GO TO 2.
NG >> Repair or replace ground connections.

2. CHECK APP SENSOR 1 POWER SUPPLY CIRCUIT-I

1. Disconnect accelerator pedal position (APP) sensor harness connector (1).

- Accelerator pedal position sensor (2)
- Accelerator pedal (3)

2. Turn ignition switch ON.

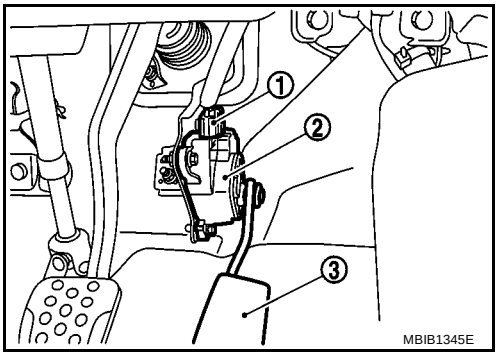

3. Check voltage between APP sensor terminal 4 and ground with CONSULT-II or tester.

Voltage: Approximately 5.0V

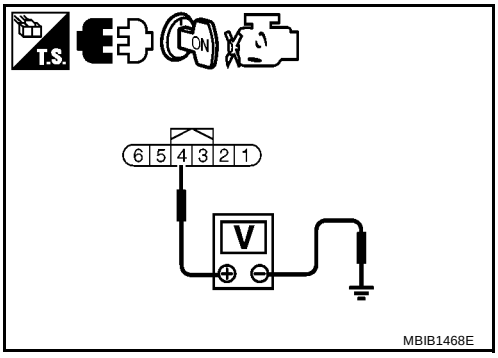

OK or NG

OK >> GO TO 7.
NG >> GO TO 3.

3. CHECK APP SENSOR 1 POWER SUPPLY CIRCUIT-II

1. Turn ignition switch OFF.
2. Disconnect ECM harness connecor.
3. Check harness continuity between APP sensor terminal 4 and ECM terminal 29.
   Refe to Wiring Diagram.

Continuity should exist.

OK or NG

OK >> GO TO 5.
NG >> GO TO 4.

4. DETECT MALFUNCTIONING PART

Check the following.
- Harness connectors M201, M8 (RHD models)
- Harness connectors M1, E101 (RHD models)
- Harness for open or short between APP sensor and ECM

>> Repair open circuit or short to ground or short to power in harness or connectors.

5. CHECK SENSOR POWER SUPPLY CIRCUITS

Check the following.
Harness for short to power and short to ground, between the following terminals.

ECM terminal	Sensor terminal	Reference Wiring Diagram
29	APP sensor terminal 4	EC-1831
47	Fuel rail pressure sensor terminal 3	EC-1737
48	Turbocharger boost sensor terminal 1	EC-1764
49	EGR volume control valve control position sensor terminal 1	EC-1801
50	Mass air flow sensor terminal 5	EC-1723
83	Refrigerant pressure sensor terminal 3	EC-1812

OK or NG
OK >> GO TO 6.
NG >> Repair short to ground or short to power in harness or connectors.

6. CHECK COMPONENTS

Check the following.
- Fuel rail pressure sensor (Refer to EC-1739, "Component Inspection" .)
- Turbocharger boost sensor (Refer to EC-1765, "Diagnostic Procedure" .)
- EGR volume control valve control position sensor (Refer to EC-1799, "Component Inspection" .)
- Mass air flow sensor (Refer to EC-1726, "Component Inspection" .)
- Refrigerant pressure sensor (Refer to ATC-85, "COMPONENT INSPECTION" or MTC-51, "COMPONENT INSPECTION" .)

OK or NG
OK >> GO TO 7.
NG >> Replace malfunctioning component.

7. CHECK APP SENSOR

Refer to EC-1757, "Component Inspection" .

OK or NG
OK >> GO TO 8.
NG >> Replace accelerator pedal assembly.

8. CHECK INTERMITTENT INCIDENT

Refer to EC-1697, "TROUBLE DIAGNOSIS FOR INTERMITTENT INCIDENT" .

>> **INSPECTION END**

DTC P0651 APP SENSOR

PFP:22693

Description

BBS004U5

The accelerator pedal position sensor is installed on the upper end of the accelerator pedal assembly. The sensors detect the accelerator pedal position and sends a signal to the ECM. The ECM uses the signal to determine the amount of fuel to be injected.

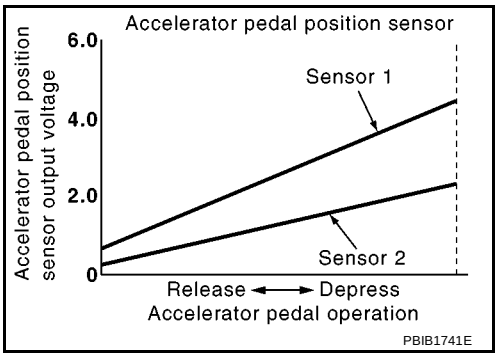

CONSULT-II Reference Value in Data Monitor Mode

BBS004U6

Specification data are reference values.

MONITOR ITEM	CONDITION		SPECIFICATION
PL PTNMR T1 V	● Ignition switch: ON (Engine stopped)	Accelerator pedal: Fully released	Approximately 15 %
PL PTNMR T2 V	● Ignition switch: ON (Engine stopped)	Accelerator pedal: Fully released	Approximately 6 %

On Board Diagnosis Logic

BBS004U7

DTC No.	Trouble diagnosis name	Possible cause
P0651	APP SENSOR 2 CIRCUIT ● CO.1: Open circuit or short circuit to +12V ● CC.0: Short circuit to ground	● Harness or connectors (The APP sensor 2 circuit is open or shorted.) ● Accelerator pedal position sensor (Accelerator pedal position sensor 2)

NOTE:

- **If DTC P0651 is displayed with DTC P0641, first perform trouble diagnosis for DTC P0641. Refer to** **EC-1830, "DTC P0641 SENSOR POWER SUPPLY"** **.**
- **Special notes:**
  - If this DTC is present, the engine idle speed is set to 1,000 rpm, the engine performance is reduced, and
  - **Malfunction indicator (Red) lights up.**

Wiring Diagram
LHD MODELS

BBS004U8

EC-APPS-01

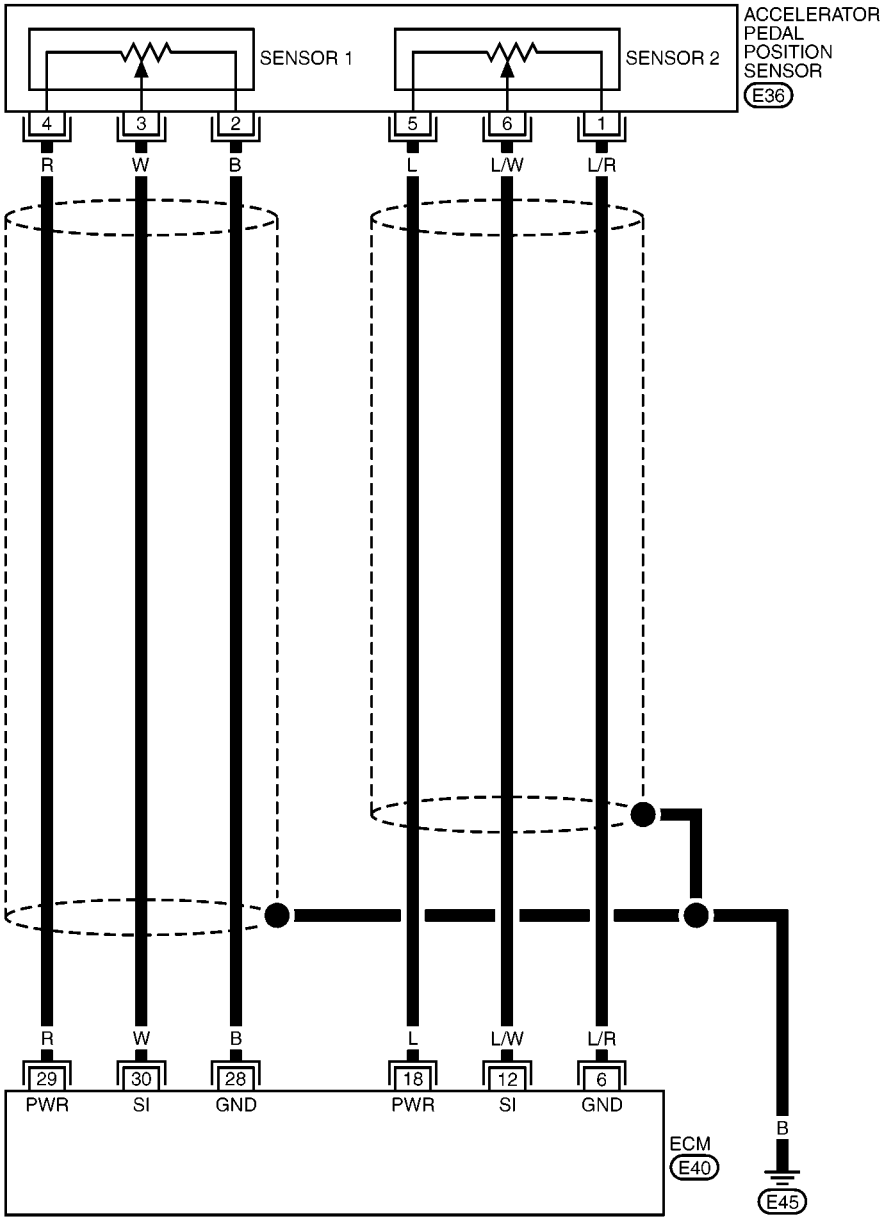

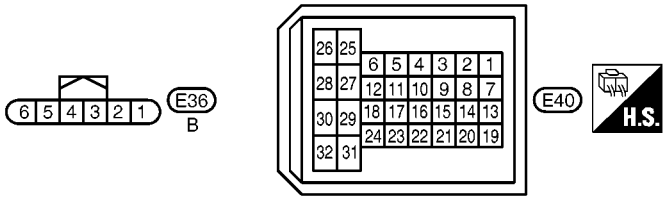

MBWA1554E

Specification data are reference values and are measured between each terminal and ground.

CAUTION:

Do not use ECM ground terminals when measuring input/output voltage. Doing so may result in damage to the ECM's transistor. Use a ground other than ECM terminals, such as the ground.

TERMINAL NO.	WIRE COLOR	ITEM	CONDITION	DATA (DC Voltage and Pulse Signal)
6	L/R	Sensor ground (Accelerator pedal position sensor 2)	**[Engine is running]** ● **Warm-up condition** ● Idle speed	Approximately 0.3V
12	L/W	Accelerator pedal position sensor 2	**[Ignition switch ON]** ● Engine stopped ● Accelerator pedal: Fully released	Approximately 0.4V
			[Ignition switch ON] ● Engine stopped ● Accelerator pedal: Fully depressed	Approximately 2.0V
18	L	Sensor power supply (Accelerator pedal position sensor 2)	**[Ignition switch ON]**	Approximately 4.6V
28	B	Sensor ground (Accelerator pedal position sensor 1)	**[Engine is running]** ● **Warm-up condition** ● Idle speed	Approximately 0.24V
29	R	Sensor power supply (Accelerator pedal position sensor 1)	**[Ignition switch ON]**	Approximately 5.0V
30	W	Accelerator pedal position sensor 1	**[Ignition switch ON]** ● Engine stopped ● Accelerator pedal: Fully released	Approximately 0.76V
			[Ignition switch ON] ● Engine stopped ● Accelerator pedal: Fully depressed	Approximately 4.2V

RHD MODELS

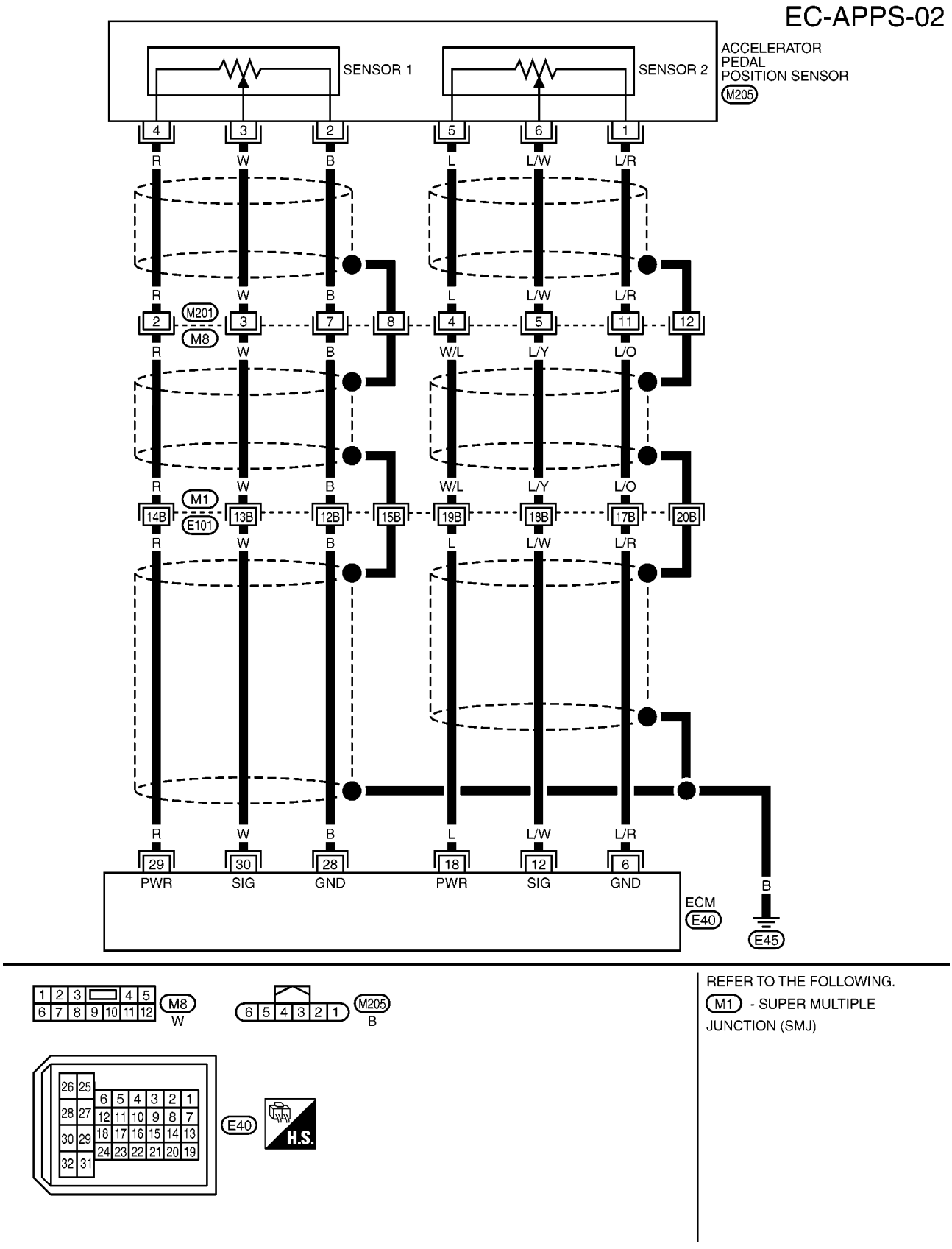
EC-APPS-02
SENSOR 1
SENSOR 2
ACCELERATOR PEDAL POSITION SENSOR
M205
4 3 2 5 6 1
R W B L L/W L/R
M201
M8
2 3 7 8 4 5 11 12
W/L L/Y L/O
M1
E101
14B 13B 12B 15B 19B 18B 17B 20B
29 30 28 18 12 6
PWR SIG GND PWR SIG GND
ECM
E40
B
E45
M8
W
M205
B
E40
H.S.
REFER TO THE FOLLOWING.
M1 - SUPER MULTIPLE JUNCTION (SMJ)
MBWA1555E

Specification data are reference values and are measured between each terminal and ground.

CAUTION:
Do not use ECM ground terminals when measuring input/output voltage. Doing so may result in damage to the ECM's transistor. Use a ground other than ECM terminals, such as the ground.

TERMINAL NO.	WIRE COLOR	ITEM	CONDITION	DATA (DC Voltage and Pulse Signal)
6	L/R	Sensor ground (Accelerator pedal position sensor 2)	**[Engine is running]** ● **Warm-up condition** ● Idle speed	Approximately 0.3V
12	L/W	Accelerator pedal position sensor 2	**[Ignition switch ON]** ● Engine stopped ● Accelerator pedal: Fully released	Approximately 0.4V
			[Ignition switch ON] ● Engine stopped ● Accelerator pedal: Fully depressed	Approximately 2.0V
18	L	Sensor power supply (Accelerator pedal position sensor 2)	**[Ignition switch ON]**	Approximately 4.6V
28	B	Sensor ground (Accelerator pedal position sensor 1)	**[Engine is running]** ● **Warm-up condition** ● Idle speed	Approximately 0.24V
29	R	Sensor power supply (Accelerator pedal position sensor 1)	**[Ignition switch ON]**	Approximately 5.0V
30	W	Accelerator pedal position sensor 1	**[Ignition switch ON]** ● Engine stopped ● Accelerator pedal: Fully released	Approximately 0.76V
			[Ignition switch ON] ● Engine stopped ● Accelerator pedal: Fully depressed	Approximately 4.2V

Diagnostic Procedure

BBS004U9

1. CHCEK GROUND CONNECTIONS

1. Turn ignition switch OFF.
2. Loosen and retighten ground screw on the body.
   Refer to EC-1703, "Ground Inspection" .

– Body ground (1)
– Priming pump (2)

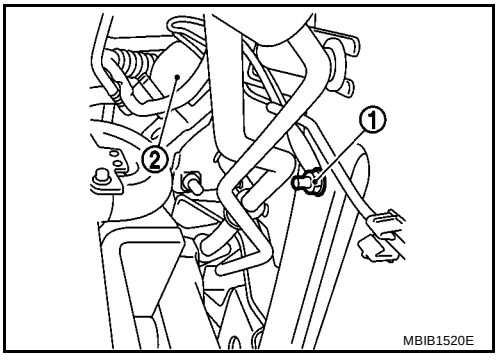

OK or NG

OK >> GO TO 2.
NG >> Repair or replace ground connections.

2. CHECK APP SENSOR 2 POWER SUPPLY CIRCUIT

1. Disconnect accelerator pedal position (APP) sensor harness connector (1).
   - Accelerator pedal position sensor (2)
   - Accelerator pedal (3)
2. Turn ignition switch ON.

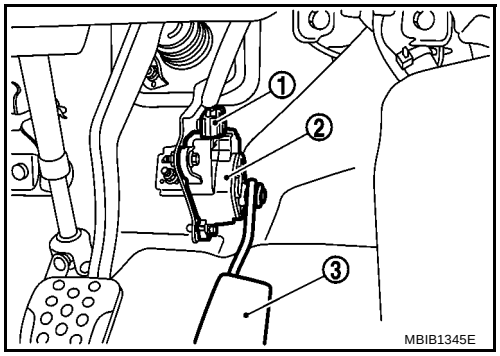

3. Check voltage between APP sensor terminal 5 and ground with CONSULT-II or tester.

   Voltage: Approximately 5.0V

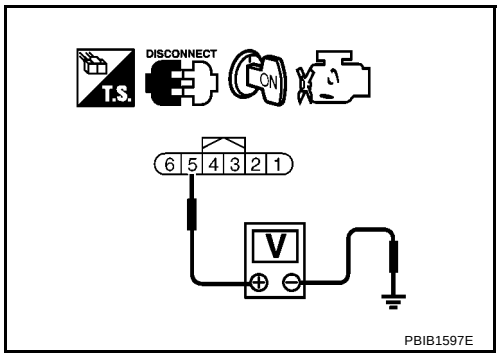

OK or NG

OK >> GO TO 4.
NG >> GO TO 3.

3. DETECT MALFUNCTIONING PART

Check the following.

- Harness connectors M201, M8 (RHD models)
- Harness connectors M1, E101 (RHD models)
- Harness for open or short between APP sensor and ECM

>> Repair open circuit or short to ground or short to power in harness or connectors.

4. CHECK APP SENSOR 2 GROUND CIRCUIT FOR OPEN AND SHORT

1. Turn ignition switch OFF.
2. Disconnect ECM harness connector.
3. Check harness continuity between APP sensor terminal 1 and ECM terminal 6.
   Refer to Wiring Diagram.

   Continuity should exist.

4. Also check harness for short to ground and short to power.

OK or NG

OK >> GO TO 6.
NG >> GO TO 5.

5. DETECT MALFUNCTIONING PART

Check the following.

- Harness connectors M201, M8 (RHD models)
- Harness connectors M1, E101 (RHD models)
- Harness for open or short between APP sensor and ECM

>> Repair open circuit or short to ground or short to power in harness or connectors.

6. CHECK APP SENSOR 2 INPUT SIGNAL CIRCUIT FOR OPEN AND SHORT

1. Check harness continuity between ECM terminal 12 and APP sensor terminal 6.
   Refer to Wiring Diagram.

   Continuity should exist.

2. Also check harness for short to ground and short to power.

OK or NG

OK >> GO TO 8.
NG >> GO TO 7.

7. DETECT MALFUNCTIONING PART

Check the following.

- Harness connectors M201, M8 (RHD models)
- Harness connectors M1, E101 (RHD models)
- Harness for open or short between APP sensor and ECM

>> Repair open circuit or short to ground or short to power in harness or connectors.

8. CHECK APP SENSOR

Refer to EC-1843, "Component Inspection" .

OK or NG

OK >> GO TO 9.
NG >> Replace accelerator pedal assembly.

9. CHECK INTERMITTENT INCIDENT

Refer to EC-1697, "TROUBLE DIAGNOSIS FOR INTERMITTENT INCIDENT" .

>> **INSPECTION END**

Component Inspection

BBS004UA

ACCELERATOR PEDAL POSITION SENSOR

1. Disconnect APP sensor harness connector (1).
   - Accelerator pedal position sensor (2)
   - Accelerator pedal (3)

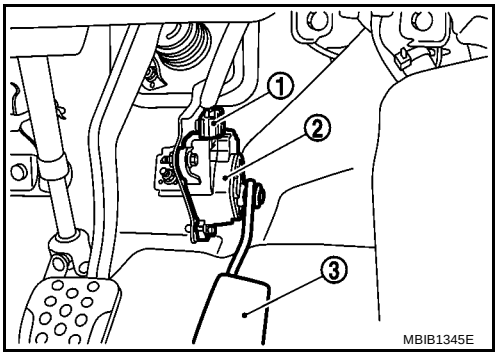

2. Check resistance between the APP sensor terminals 2 and 4, 1 and 5.

Terminals	Resistance
2 and 4:	1.7 ± 0.9 kΩ
1 and 5:	2.4 ± 1.2 kΩ

3. If NG, replace accelerator pedal assembly.

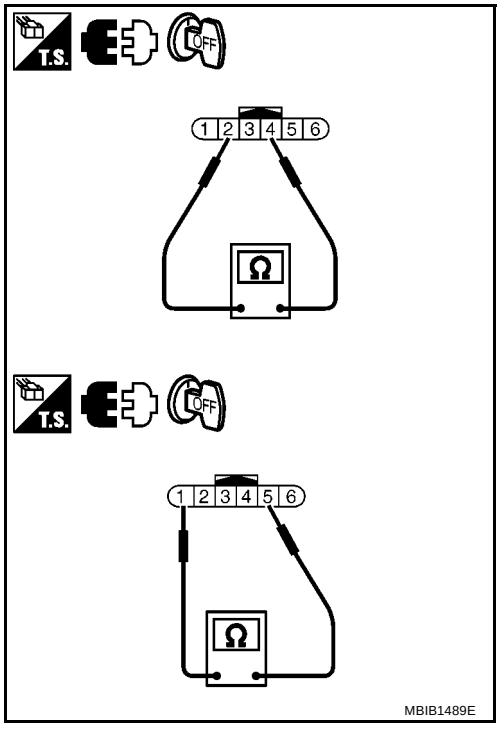

BBS004UB

Removal and Installation

ACCELERATOR PEDAL

Refer to ACC-2, "ACCELERATOR CONTROL SYSTEM" .

DTC P0685 ECM RELAY

PFP:22693

On Board Diagnosis Logic

BBS0046V

DTC No.	Trouble diagnosis name	Possible cause
P0685	ECM RELAY CIRCUIT ● 1.DEF: Permanent low signal ● 2.DEF: Permanent high signal	● Harness or connectors (The ECM relay circuit is shorted.) ● ECM relay

Wiring Diagram

BBS0046X

EC-ECMRLY-01

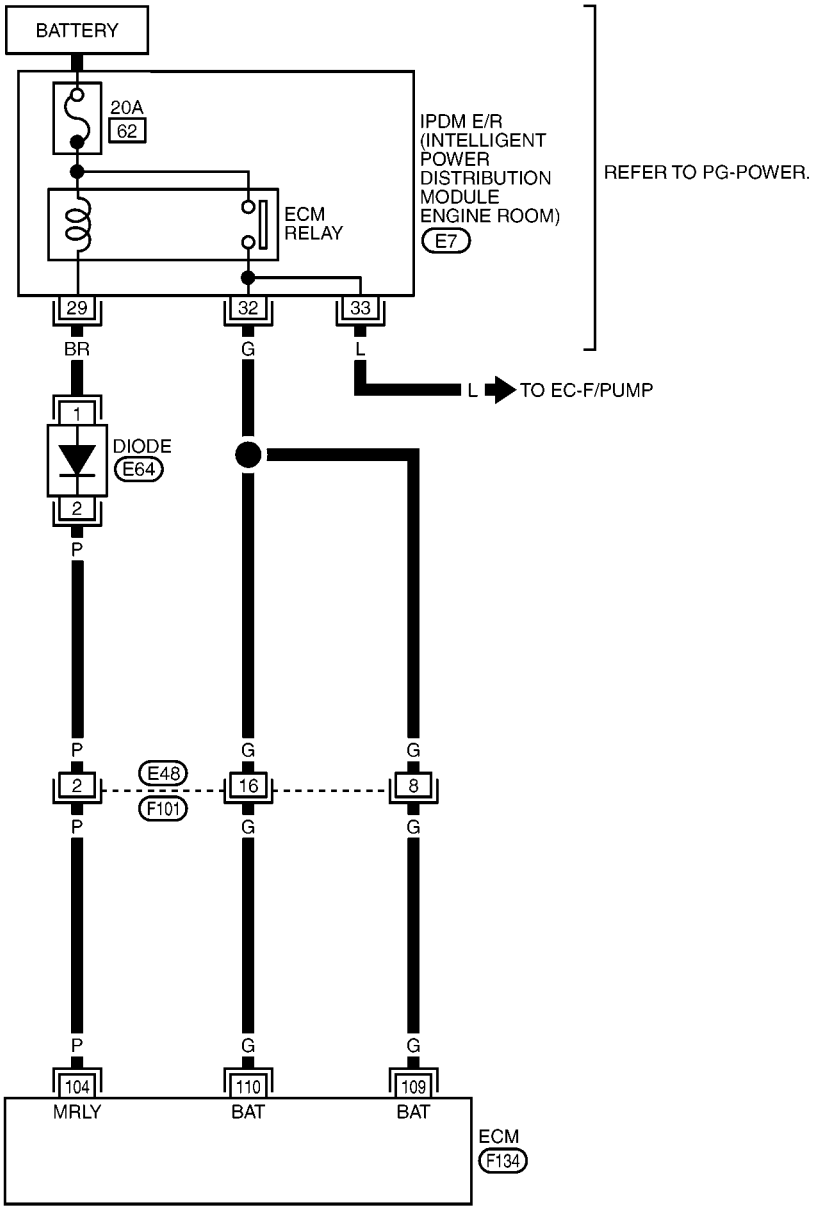

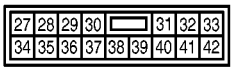

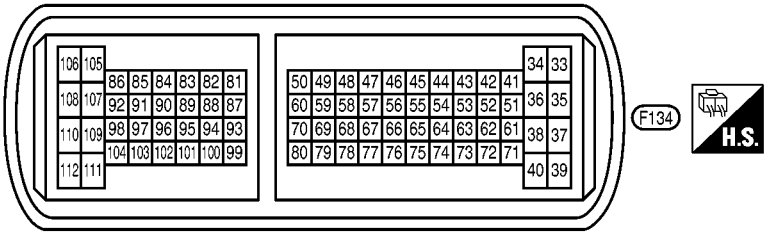

REFER TO THE FOLLOWING.
F101 - SUPER MULTIPLE JUNCTION (SMJ)

MBWA1572E

Specification data are reference values and are measured between each terminal and ground.

CAUTION:
Do not use ECM ground terminals when measuring input/output voltage. Doing so may result in damage to the ECM's transistor. Use a ground other than ECM terminals, such as the ground.

TERMINAL NO.	WIRE COLOR	ITEM	CONDITION	DATA (DC Voltage)
104	P	ECM relay (self-shutoff)	**[Ignition switch ON]** **[Ignition switch OFF]** ● For a few seconds after turning ignition switch OFF	Approximately 1.4V
			[Ignition switch OFF] ● More than a few seconds after turning ignition switch OFF	BATTERY VOLTAGE (11 - 14V)
109 110	G G	Power supply for ECM	**[Ignition switch ON]**	BATTERY VOLTAGE (11 - 14V)

Diagnostic Procedure

BBS0046Y

1. CHECK ECM POWER SUPPLY CIRCUIT-I

1. Turn ignition switch OFF and wait at least 10 seconds.
2. Turn ignition switch ON and then OFF.
3. Check voltage between ECM terminals 109, 110 and ground with CONSULT-II or tester.

Voltage: After turning ignition switch OFF, battery voltage will exist for a few seconds, then drop to approximately 0V.

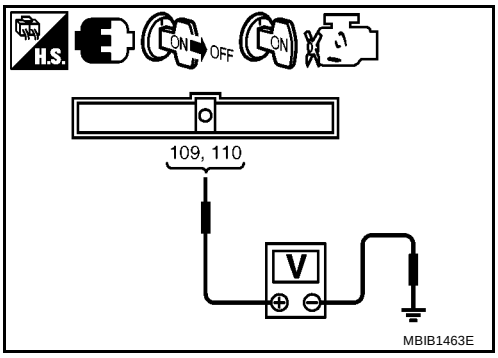

OK or NG

OK >> GO TO 9.
NG (Battery voltage does not exist)>>GO TO 2.
NG (Battery voltage exists for more then a few seconds)>>GO TO 5.

2. CHECK ECM POWER SUPPLY CIRCUIT-II

1. Turn ignition switch OFF and wait at least 10 seconds.
2. Check voltage between ECM terminal 104 and ground with CONSULT-II or tester.

Voltage: Battery voltage

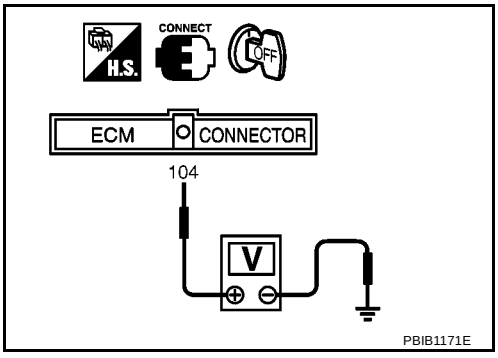

OK or NG

OK >> GO TO 3.
NG >> GO TO 5.

3. CHECK ECM POWER SUPPLY CIRCUIT-III

1. Disconnect ECM harness connector.
2. Disconnect IPDM E/R harness connector E7.
3. Check harness continuity between ECM terminals 109, 110 and IPDM E/R terminal 32.
   Refer to Wiring Diagram.

   Continuity should exist.

4. Also check harness for short to ground and short to power.

OK or NG

OK >> GO TO 8.
NG >> GO TO 4.

4. DETECT MALFUNCTIONING PART

Check the following.

- Harness connectors E48, F101
- Harness for open or short between ECM and IPDM E/R

>> Repair open circuit or short to ground or short to power in harness or connectors.

5. CHECK ECM POWER SUPPLY CIRCUIT-IV

1. Disconnect ECM harness connector.
2. Disconnect IPDM E/R harness connector E7.
3. Check harness continuity between ECM terminal 104 and IPDM E/R terminal 29 under the following conditions.
   Refer to Wiring Diagram.

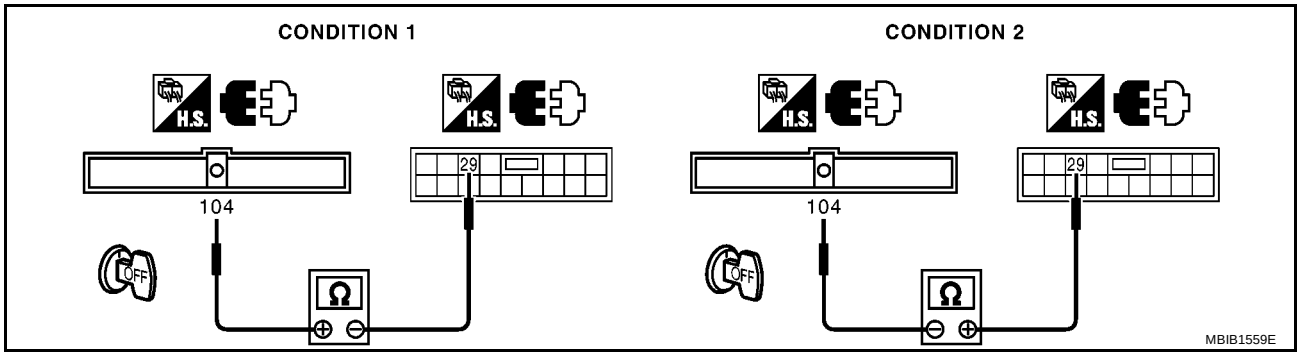

CONDITION 1: Continuity should exist.
CONDITION 2: Continuity should not exist.

4. Also check harness for short to ground and short to power.

OK or NG

OK >> GO TO 7.
NG >> GO TO 6.

6. DETECT MALFUNCTIONING PART

Check the following.

- Harness connectors E48, F101
- Diode E64
- Harness for open or short between ECM and IPDM E/R

>> Repair open circuit or short to ground or short to power in harness or connectors.

7. CHECK 20A FUSE

1. Disconnect 20 A fuse.
2. Check 20A fuse

OK or NG

OK >> GO TO 8.
NG >> Replace 20A fuse.

8. CHECK INTERMITTENT INCIDENT

Refer to EC-1697, "TROUBLE DIAGNOSIS FOR INTERMITTENT INCIDENT" .

OK or NG

OK >> Replace IPDM E/R. Refer to PG-18, "IPDM E/R (INTELLIGENT POWER DISTRIBUTION MODULE ENGINE ROOM)" .
NG >> Repair open circuit or short to ground or short to power in harness or connectors.

9. CHECK INTERMITTENT INCIDENT

Refer to EC-1697, "TROUBLE DIAGNOSIS FOR INTERMITTENT INCIDENT" .

>> **INSPECTION END**

DTC P0703 BRAKE SWITCH

PFP:22693

Description

BBS00470

Brake switch signal is applied to the ECM through the stop lamp switch when the brake pedal is depressed. This signal is used mainly to decrease the engine speed when the vehicle is driving.

On Board Diagnosis Logic

BBS00472

DTC No.	Trouble diagnosis name	Possible cause
P0703	BRAKE SWITCH CIRCUIT ● 1.DEF: Signal absent ● 2.DEF: Inconsistency	● Harness or connectors (Stop lamp switch circuit is open or shorted.) ● Stop lamp switch

NOTE:

- **Conditions for applying the diagnostic procedure to the stored DTCs:**
  The DTC is declared present when the ignition switch is ON, when decelerating or when the brake pedal is depressed.

Wiring Diagram

BBS00474

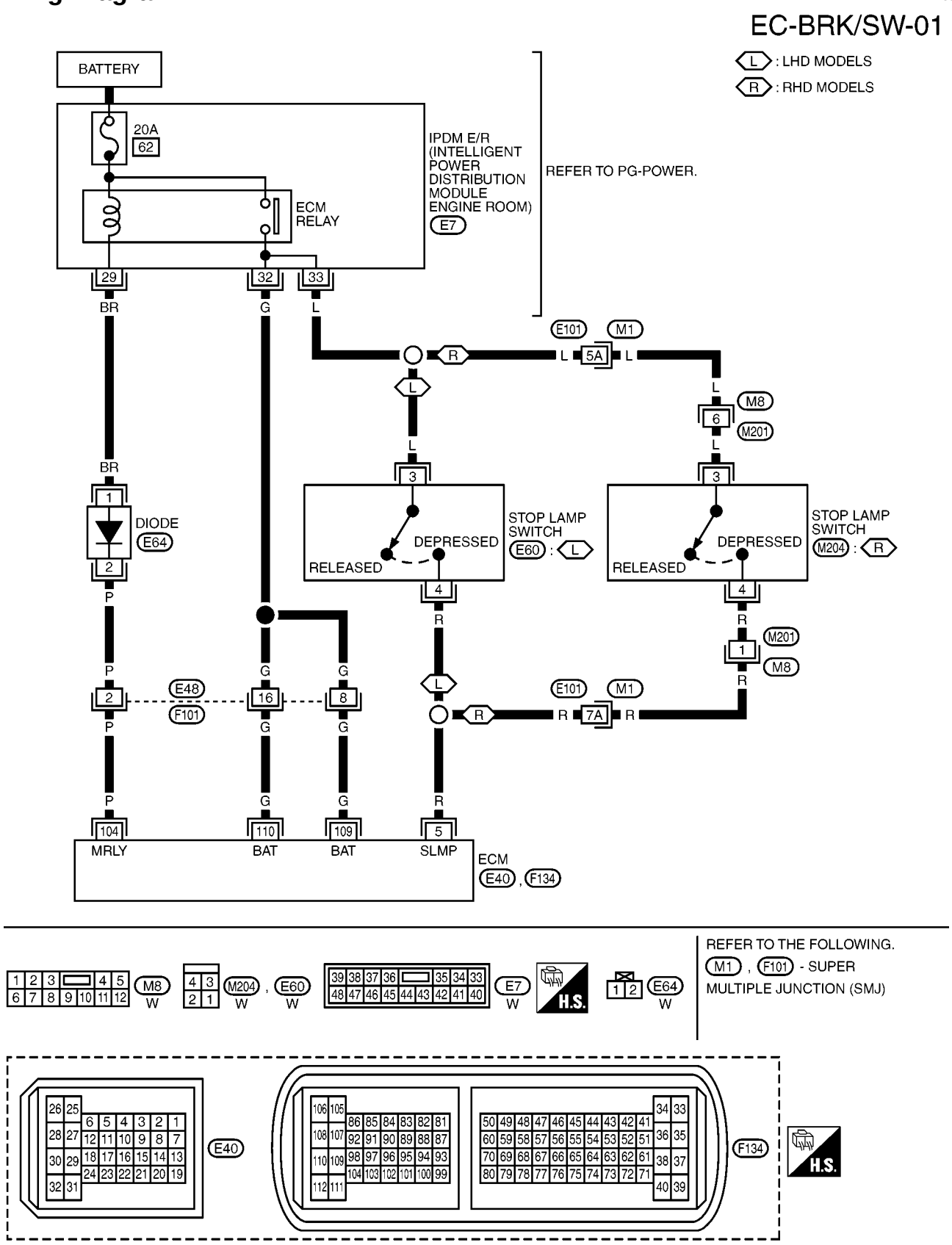

Specification data are reference values and are measured between each terminal and ground.

CAUTION:

Do not use ECM ground terminals when measuring input/output voltage. Doing so may result in damage to the ECM's transistor. Use a ground other than ECM terminals, such as the ground.

TERMINAL NO.	WIRE COLOR	ITEM	CONDITION	DATA (DC Voltage)
5	R	Stop lamp switch	**[Ignition switch: ON]** ● Brake pedal: Fully released	Approximately 0V
			[Ignition switch: ON] ● Brake pedal: Slightly depressed	BATTERY VOLTAGE (11 - 14V)

Diagnostic Procedure

BBS00475

1. CHECK STOP LAMP SWITCH POWER SUPPLY CIRCUIT

1. Turn ignition switch OFF.
2. Disconnect stop lamp switch (1) harness connector.
- Brake pedal (2)
3. Turn ignition switch ON.

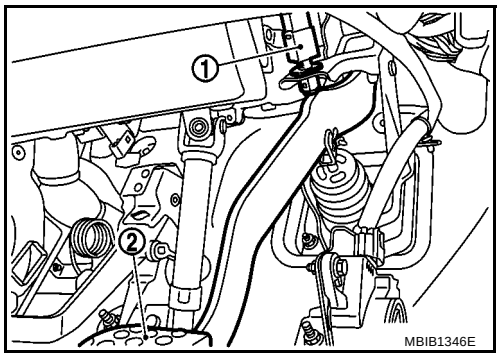

4. Check voltage between stop lamp switch terminal 3 and ground with CONSULT-II or tester.

Voltage: Battery voltage

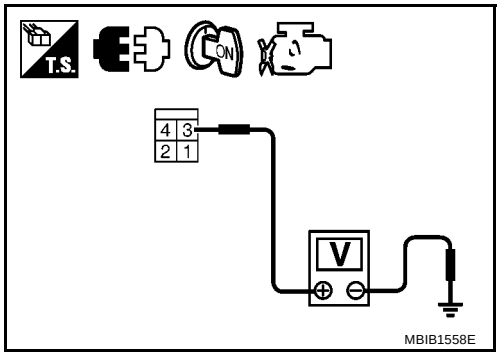

OK or NG

OK >> GO TO 3.
NG >> GO TO 2.

2. DETECT MALFUNCTIONING PART

Check the following.

- Harness connectors M1, E101 (RHD models)
- Harness connectors M8, M201 (RHD models)
- 10A fuse
- Fuse block (J/B) connector E7
- Harness for open and short between stop lamp switch and IPDM E/R

>> Repair open circuit or short to ground or short to power in harness or connectors.

3. CHECK STOP LAMP SWITCH INPUT SIGNAL CIRCUIT FOR OPEN AND SHORT

1. Turn ignition switch OFF.
2. Disconnect ECM harness connector.
3. Check harness continuity between ECM terminal 5 and stop lamp switch terminal 4.
   Refer to Wiring Diagram.

   Continuity should exist.

4. Also check harness for short to ground and short to power.

OK or NG

OK >> GO TO 5.
NG >> GO TO 4.

4. DETECT MALFUNCTIONING PART

Check the following.

- Harness connectors M1, E101 (RHD models)
- Harness connectors M8, M201 (RHD models)
- Harness for open and short between stop lamp switch and ECM

>> Repair open circuit or short to ground or short to power in harness or connectors.

5. CHECK STOP LAMP SWITCH

Refer to EC-1854, "Component Inspection" .

OK or NG

OK >> GO TO 6.
NG >> Replace stop lamp switch.

6. CHECK INTERMITTENT INCIDENT

Refer to EC-1697, "TROUBLE DIAGNOSIS FOR INTERMITTENT INCIDENT" .

>> **INSPECTION END**

Component Inspection

BBS00476

STOP LAMP SWITCH

1. Disconnect stop lamp switch (1) harness connector.
   - Brake pedal (2)

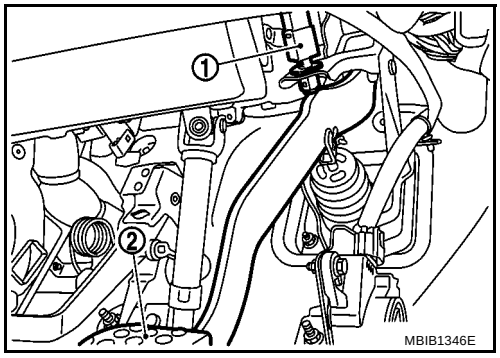

2. Check continuity between stop lamp switch terminals 3 and 4 under the following conditions.

Conditions	Continuity
Brake pedal: Fully released	Should not exist
Brake pedal: Slightly depressed	Should exist

If NG, adjust stop lamp switch installation, refer to BR-6, "BRAKE PEDAL" , and perform step 2 again.

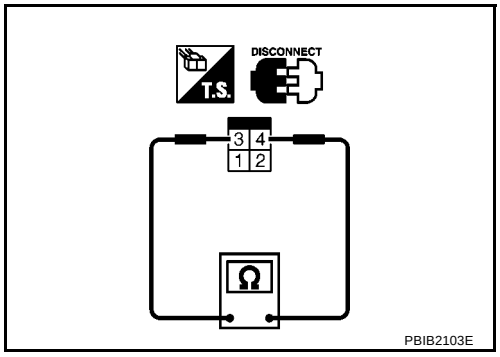

DTC P2120 APP SENSOR

PFP:22693

Description

BBS00477

The accelerator pedal position sensor is installed on the upper end of the accelerator pedal assembly. The sensors detect the accelerator pedal position and sends a signal to the ECM. The ECM uses the signal to determine the amount of fuel to be injected.

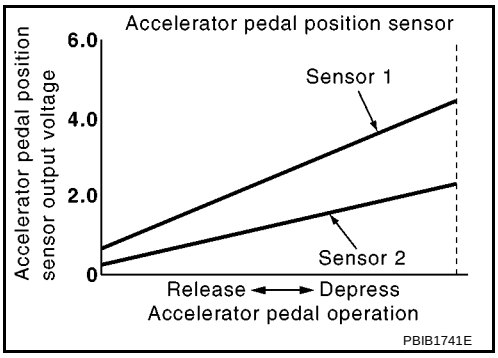

CONSULT-II Reference Value in Data Monitor Mode

BBS00478

Specification data are reference values.

MONITOR ITEM	CONDITION		SPECIFICATION
PL PTNMR T1 V	● Ignition switch: ON (Engine stopped)	Accelerator pedal: Fully released	Approximately 15 %
PL PTNMR T2 V	● Ignition switch: ON (Engine stopped)	Accelerator pedal: Fully released	Approximately 6 %

On Board Diagnosis Logic

BBS00479

DTC No.	Trouble diagnosis name	Possible cause
P2120	APP SENSOR 2 CIRCUIT ● CO.0: Open circuit or short circuit to ground ● CC.1: Short circuit to +12V	● Harness or connectors (The APP sensor 2 circuit is open or shorted.) ● Accelerator pedal position sensor (Accelerator pedal position sensor 2)

NOTE:

- **If DTC P2120 is displayed with DTC P0641, first perform trouble diagnosis for DTC P0641. Refer to** **EC-1830, "DTC P0641 SENSOR POWER SUPPLY"** **.**
- **If DTC P2120 is displayed with DTC P0651, first perform trouble diagnosis for DTC P0651. Refer to** **EC-1837, "DTC P0651 APP SENSOR"** **.**
- **Special notes:**
  - If this DTC is present, the engine speed is maintained above 1,000 rpm, and **malfuction indicator (Red) lights up.**
  - If this DTC is present with DTC P0225, the engine idle speed is fixed at 1,800 rpm, and **malfuction indicator (Red) lights up.**

Wiring Diagram
LHD MODELS

BBS0047B

EC-APPS-01

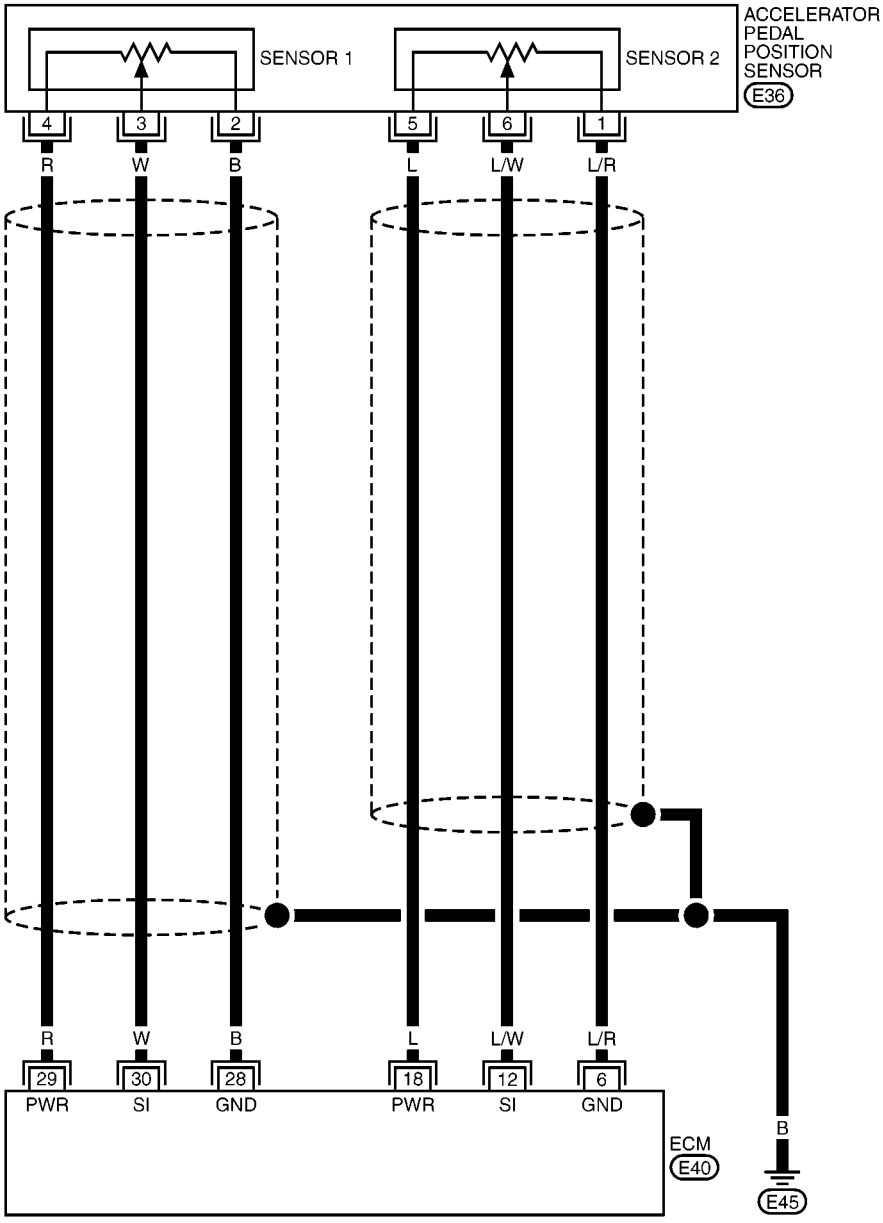

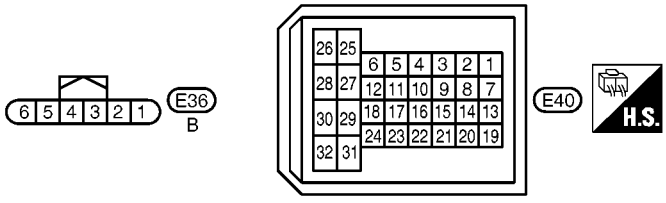

MBWA1554E

Specification data are reference values and are measured between each terminal and ground.

CAUTION:

Do not use ECM ground terminals when measuring input/output voltage. Doing so may result in damage to the ECM's transistor. Use a ground other than ECM terminals, such as the ground.

TERMINAL NO.	WIRE COLOR	ITEM	CONDITION	DATA (DC Voltage and Pulse Signal)
6	L/R	Sensor ground (Accelerator pedal position sensor 2)	**[Engine is running]** ● **Warm-up condition** ● Idle speed	Approximately 0.3V
12	L/W	Accelerator pedal position sensor 2	**[Ignition switch ON]** ● Engine stopped ● Accelerator pedal: Fully released	Approximately 0.4V
			[Ignition switch ON] ● Engine stopped ● Accelerator pedal: Fully depressed	Approximately 2.0V
18	L	Sensor power supply (Accelerator pedal position sensor 2)	**[Ignition switch ON]**	Approximately 4.6V
28	B	Sensor ground (Accelerator pedal position sensor 1)	**[Engine is running]** ● **Warm-up condition** ● Idle speed	Approximately 0.24V
29	R	Sensor power supply (Accelerator pedal position sensor 1)	**[Ignition switch ON]**	Approximately 5.0V
30	W	Accelerator pedal position sensor 1	**[Ignition switch ON]** ● Engine stopped ● Accelerator pedal: Fully released	Approximately 0.76V
			[Ignition switch ON] ● Engine stopped ● Accelerator pedal: Fully depressed	Approximately 4.2V

RHD MODELS

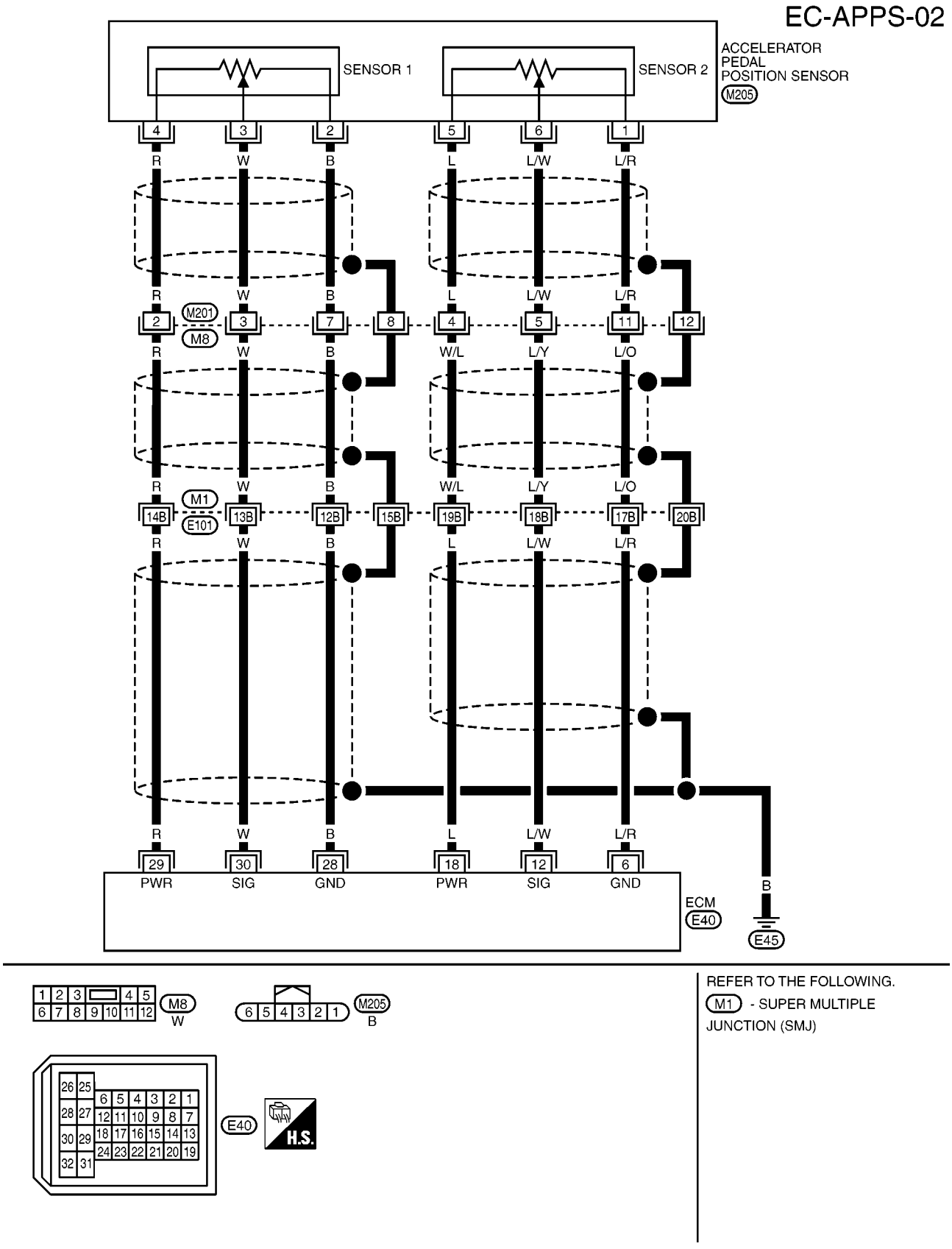
EC-APPS-02
SENSOR 1
SENSOR 2
ACCELERATOR PEDAL POSITION SENSOR
M205
4 3 2 5 6 1
R W B L L/W L/R
M201
M8
2 3 7 8 4 5 11 12
W/L L/Y L/O
M1
E101
14B 13B 12B 15B 19B 18B 17B 20B
29 30 28 18 12 6
PWR SIG GND PWR SIG GND
ECM
E40
B
E45
M8
W
M205
B
E40
H.S.
REFER TO THE FOLLOWING.
M1 - SUPER MULTIPLE JUNCTION (SMJ)
MBWA1555E

Specification data are reference values and are measured between each terminal and ground.

CAUTION:
Do not use ECM ground terminals when measuring input/output voltage. Doing so may result in damage to the ECM's transistor. Use a ground other than ECM terminals, such as the ground.

TERMINAL NO.	WIRE COLOR	ITEM	CONDITION	DATA (DC Voltage and Pulse Signal)
6	L/R	Sensor ground (Accelerator pedal position sensor 2)	**[Engine is running]** ● **Warm-up condition** ● Idle speed	Approximately 0.3V
12	L/W	Accelerator pedal position sensor 2	**[Ignition switch ON]** ● Engine stopped ● Accelerator pedal: Fully released	Approximately 0.4V
			[Ignition switch ON] ● Engine stopped ● Accelerator pedal: Fully depressed	Approximately 2.0V
18	L	Sensor power supply (Accelerator pedal position sensor 2)	**[Ignition switch ON]**	Approximately 4.6V
28	B	Sensor ground (Accelerator pedal position sensor 1)	**[Engine is running]** ● **Warm-up condition** ● Idle speed	Approximately 0.24V
29	R	Sensor power supply (Accelerator pedal position sensor 1)	**[Ignition switch ON]**	Approximately 5.0V
30	W	Accelerator pedal position sensor 1	**[Ignition switch ON]** ● Engine stopped ● Accelerator pedal: Fully released	Approximately 0.76V
			[Ignition switch ON] ● Engine stopped ● Accelerator pedal: Fully depressed	Approximately 4.2V

Diagnostic Procedure

BBS0047C

1. CHCEK GROUND CONNECTIONS

1. Turn ignition switch OFF.
2. Loosen and retighten ground screw on the body.
   Refer to EC-1703, "Ground Inspection" .

– Body ground (1)
– Priming pump (2)

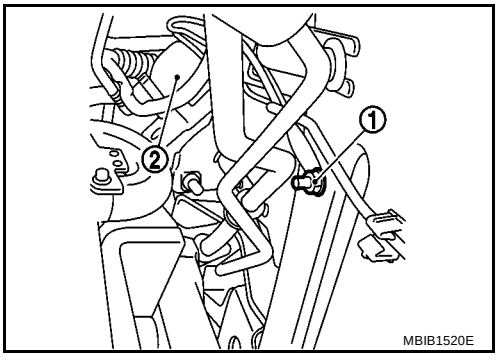

OK or NG

OK >> GO TO 2.
NG >> Repair or replace ground connections.

2. CHECK APP SENSOR 2 POWER SUPPLY CIRCUIT

1. Disconnect accelerator pedal position (APP) sensor harness connector (1).
- Accelerator pedal position sensor (2)
- Accelerator pedal (3)
2. Turn ignition switch ON.

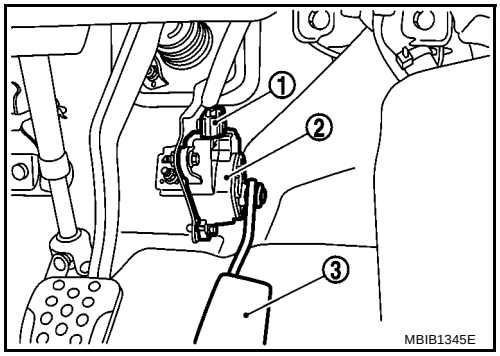

3. Check voltage between APP sensor terminal 5 and ground with CONSULT-II or tester.

Voltage: Approximately 5.0V

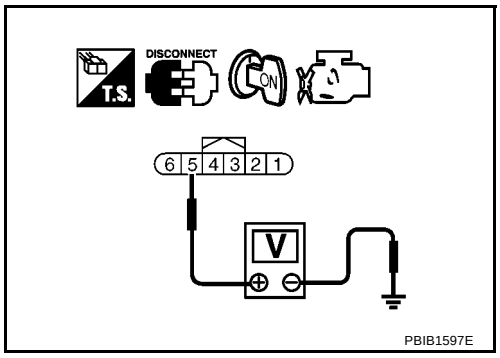

OK or NG

OK >> GO TO 4.
NG >> GO TO 3.

3. DETECT MALFUNCTIONING PART

Check the following.
- Harness connectors M201, M8 (RHD models)
- Harness connectors M1, E101 (RHD models)
- Harness for open or short between APP sensor and ECM

>> Repair open circuit or short to ground or short to power in harness or connectors.

4. CHECK APP SENSOR 2 GROUND CIRCUIT FOR OPEN AND SHORT

1. Turn ignition switch OFF.
2. Disconnect ECM harness connector.
3. Check harness continuity between APP sensor terminal 1 and ECM terminal 6.
   Refer to Wiring Diagram.

Continuity should exist.

4. Also check harness for short to ground and short to power.

OK or NG

OK >> GO TO 6.
NG >> GO TO 5.

5. DETECT MALFUNCTIONING PART

Check the following.
- Harness connectors M201, M8 (RHD models)
- Harness connectors M1, E101 (RHD models)
- Harness for open or short between APP sensor and ECM

>> Repair open circuit or short to ground or short to power in harness or connectors.

6. CHECK APP SENSOR 2 INPUT SIGNAL CIRCUIT FOR OPEN AND SHORT

1. Check harness continuity between ECM terminal 12 and APP sensor terminal 6.
   Refer to Wiring Diagram.

   Continuity should exist.

2. Also check harness for short to ground and short to power.

OK or NG

OK >> GO TO 8.
NG >> GO TO 7.

7. DETECT MALFUNCTIONING PART

Check the following.

- Harness connectors M201, M8 (RHD models)
- Harness connectors M1, E101 (RHD models)
- Harness for open or short between APP sensor and ECM

>> Repair open circuit or short to ground or short to power in harness or connectors.

8. CHECK APP SENSOR

Refer to EC-1861, "Component Inspection" .

OK or NG

OK >> GO TO 9.
NG >> Replace accelerator pedal assembly.

9. CHECK INTERMITTENT INCIDENT

Refer to EC-1697, "TROUBLE DIAGNOSIS FOR INTERMITTENT INCIDENT" .

>> **INSPECTION END**

Component Inspection

BBS0047D

ACCELERATOR PEDAL POSITION SENSOR

1. Disconnect APP sensor harness connector (1).
   - Accelerator pedal position sensor (2)
   - Accelerator pedal (3)

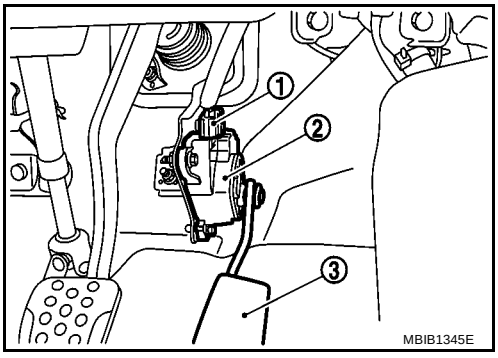

2. Check resistance between the APP sensor terminals 2 and 4, 1 and 5.

Terminals	Resistance
2 and 4:	1.7 ± 0.9 kΩ
1 and 5:	2.4 ± 1.2 kΩ

3. If NG, replace accelerator pedal assembly.

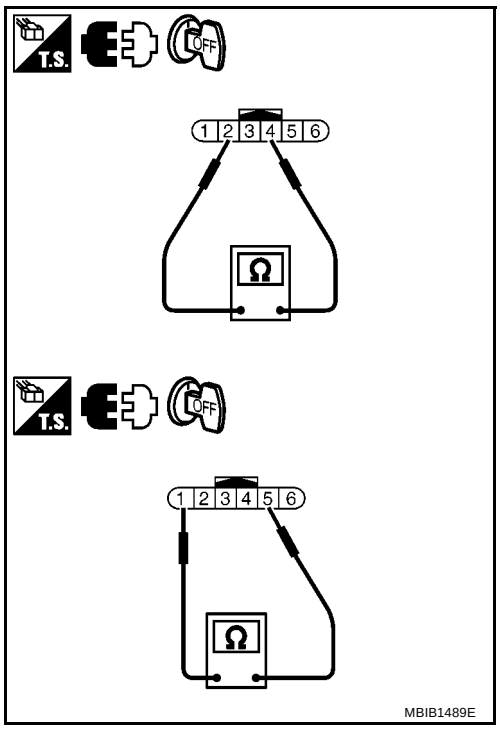

BBS0047E

Removal and Installation

ACCELERATOR PEDAL

Refer to ACC-2, "ACCELERATOR CONTROL SYSTEM" .

DTC P2226 BARO SENSOR

PFP:22693

Description

BBS0047F

The barometric pressure sensor is built into ECM. The sensor detects ambient barometric pressure and sends the voltage signal to the microcomputer.

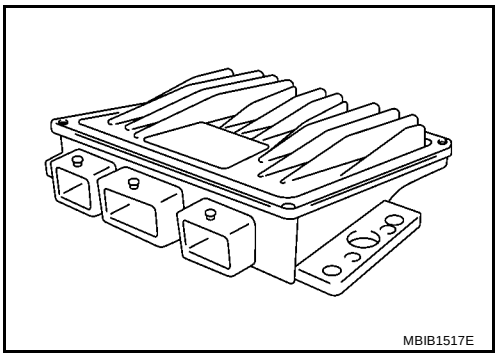

On Board Diagnosis Logic

BBS0047G

DTC No.	Trouble diagnosis name	Possible cause
P2226	BAROMETRIC PRESSURE SENSOR CIRCUIT ● CC.1: Shoet circuit to +12V ● CO.0: Short circuit to ground or open circuit	● ECM

Diagnostic Procedure

BBS0047I

1. REPLACE ECM

1. Replace ECM.
2. Perform initialization of NATS system and registration of all NATS ignition key IDs. Refer to BL-218, "ECM Re-communicating Function" .
3. Perform Injector Adjustment Value Registration. Refer to EC-1625, "Injector Adjustment Value Registration" .

>> **INSPECTION END**

COOLING FAN

PFP:21486

System Description

BBS004UC

Sensor	Input Signal to ECM	ECM function	Actuator
Crankshaft position sensor (POS) Camshaft position sensor (PHASE)	Engine speed	Cooling fan control	IPDM E/R (Cooling fan relays)
Battery	Battery voltage		
Wheel sensor	Vehicle speed*		
Engine coolant temperature sensor	Engine coolant temperature		
Air conditioner switch	Air conditioner ON signal*		
Refrigerant pressure sensor	Refrigerant pressure		

*: This signal is sent to ECM through CAN communication line.

The ECM controls the cooling fan corresponding to the vehicle speed, engine coolant temperature, refrigerant pressure, and air conditioner ON signal. The control system has 3-step control [HIGH/LOW/OFF].

COOLING FAN OPERATION

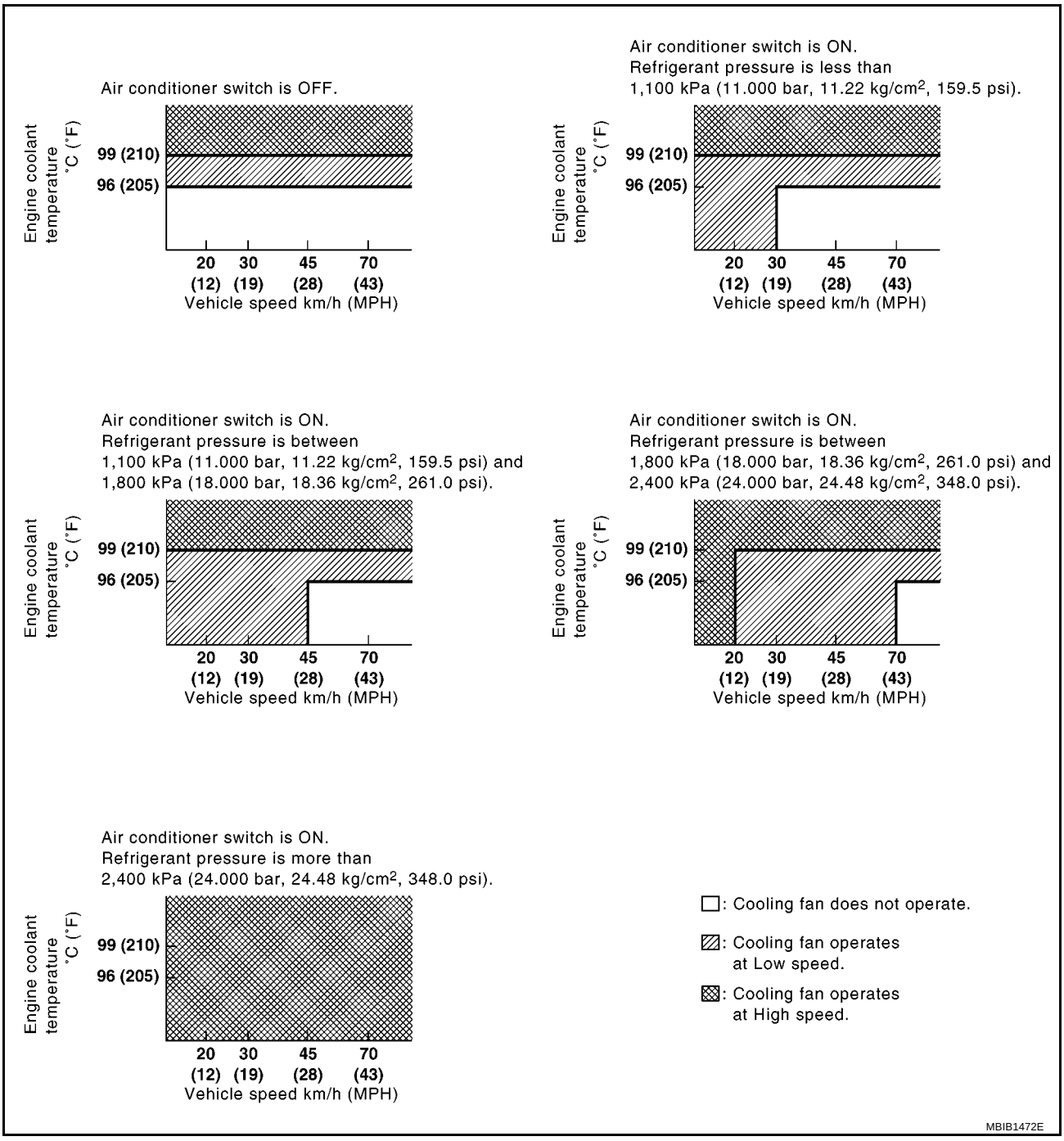

Wiring Diagram

BBS004UG

EC-COOL/F-01

: DATA LINE

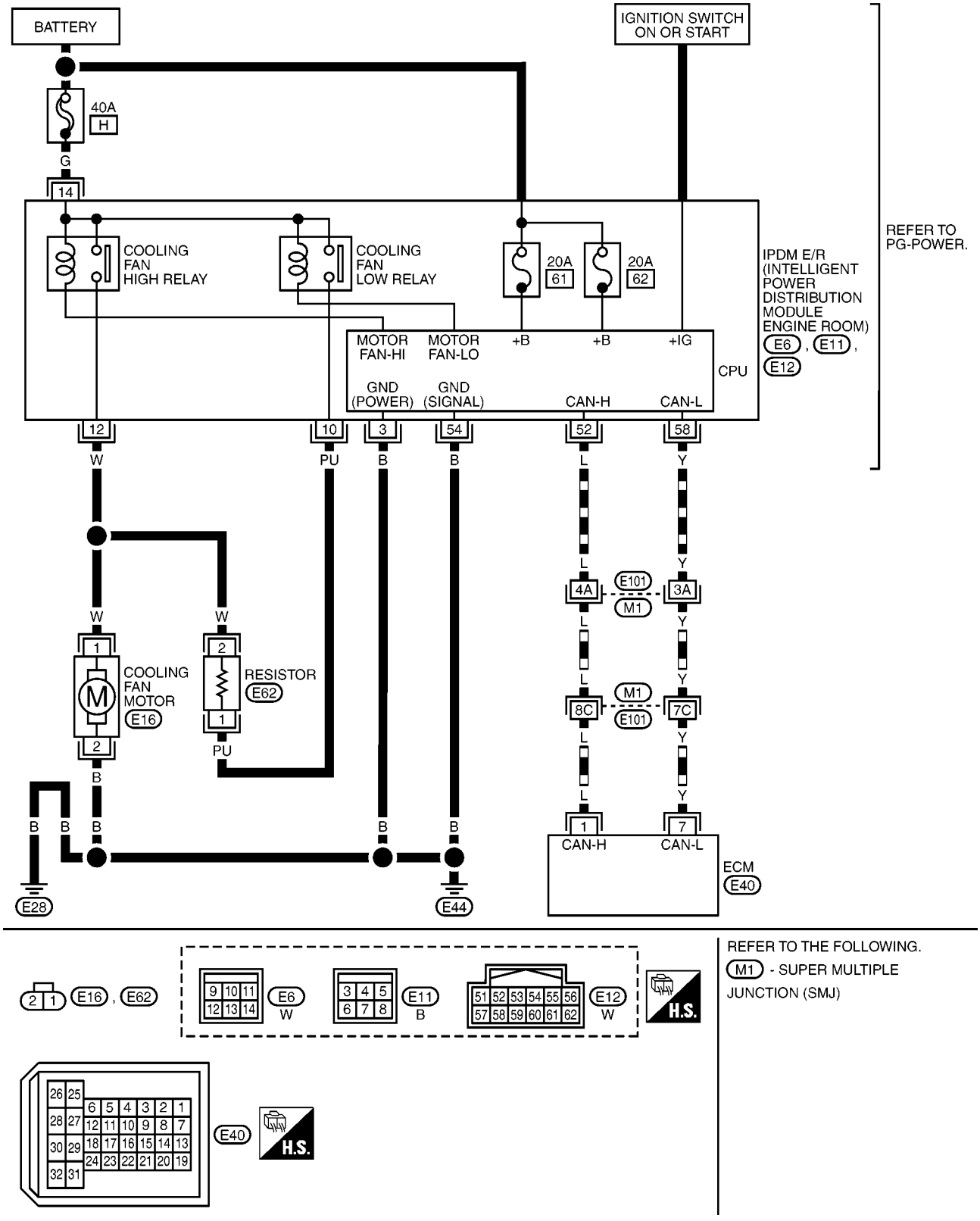

MBWA1566E

Diagnostic Procedure

BBS004UH

1. CHECK COOLING FAN OPERATION

1. Perform IPDM E/R auto active test and check cooling fan motors operation, refer to PG-22, "Auto Active Test" .
2. Make sure that cooling fan operates at each speed (Low/High).

OK or NG

OK >> **INSPECTION END**
NG >> GO TO 2.

2. CHECK IPDM E/R POWER SUPPLY CIRCUIT

1. Turn ignition switch OFF.
2. Disconnect IPDM E/R harness connector E6.
3. Check voltage between IPDM E/R terminal 14 and ground with CONSULT-II or tester.

Voltage: Battery voltage

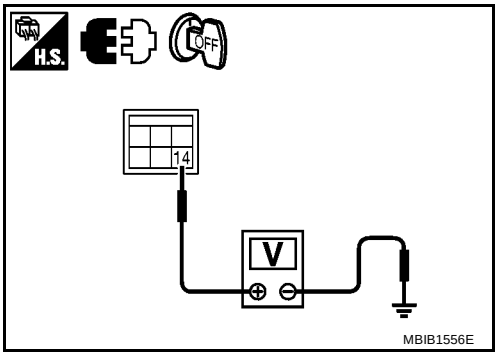

OK or NG

OK >> GO TO 4.
NG >> GO TO 3.

3. DETECT MALFUNCTIONING PART

Check the following.

- 40A fusible link
- Harness for open or short between IPDM E/R and battery

>> Repair open circuit or short to ground in harness or connectors.

4. CHECK IPDM E/R GROUND CIRCUIT FOR OPEN AND SHORT

1. Disconnect IPDM E/R harness connectors E11 and E12.
2. Check harness continuity between IPDM E/R terminals 3, 54 and ground. Refer to Wiring Diagram.

Continuity should exist.

3. Also check harness for short to power.

OK or NG

OK >> GO TO 5.
NG >> Repair open circuit or short to power in harness or connectors.

5. CHECK COOLING FAN MOTOR CIRCUIT FOR OPEN AND SHORT

1. Disconnect cooling fan motor harness connector.
2. Check harness continuity between the following terminals.
   Cooling fan motor terminal 1 and IPDM E/R terminal 12,
   Cooling fan motor terminal 1 and IPDM E/R terminal 10,
   Cooling fan motor terminal 2 and ground.
   Refer to Wiring diagram.

   Continuity should exist.

3. Also check harness for short to ground and short to power.

OK or NG

OK >> GO TO 7.
NG >> GO TO 6.

6. DETECT MALFUNCTIONING PART

Check the following.

- Resistor E62
- Harness for open or short between cooling fan motor and IPDM E/R
- Harness for open or short between cooling fan motor and ground

>> Repair open circuit or short to ground in harness or connectors.

7. CHECK COOLING FAN MOTOR

Refer to EC-1868, "Component Inspection" .

OK or NG

OK >> GO TO 8.
NG >> Replace cooling fan motor.

8. CHECK INTERMITTENT INCIDENT

Perform EC-1697, "TROUBLE DIAGNOSIS FOR INTERMITTENT INCIDENT" .

OK or NG

OK >> Replace IPDM E/R. Refer to PG-18, "IPDM E/R (INTELLIGENT POWER DISTRIBUTION MODULE ENGINE ROOM)" .
NG >> Repair or replace harness or connector.

Component Inspection

BBS004UJ

COOLING FAN MOTOR

1. Disconnect cooling fan motor harness connector.
2. Supply cooling fan motor terminals with battery voltage and check operation.
3. If NG, replace cooling fan motor.

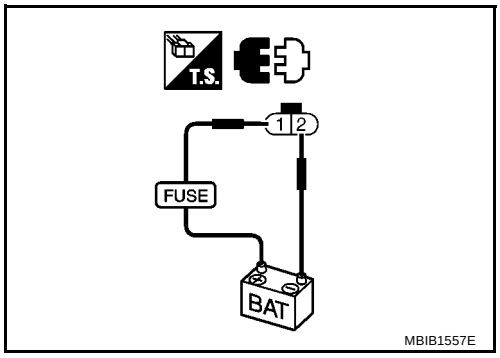

MI & DATA LINK CONNECTORS

PFP:24814

Wiring Diagram

BBS00417

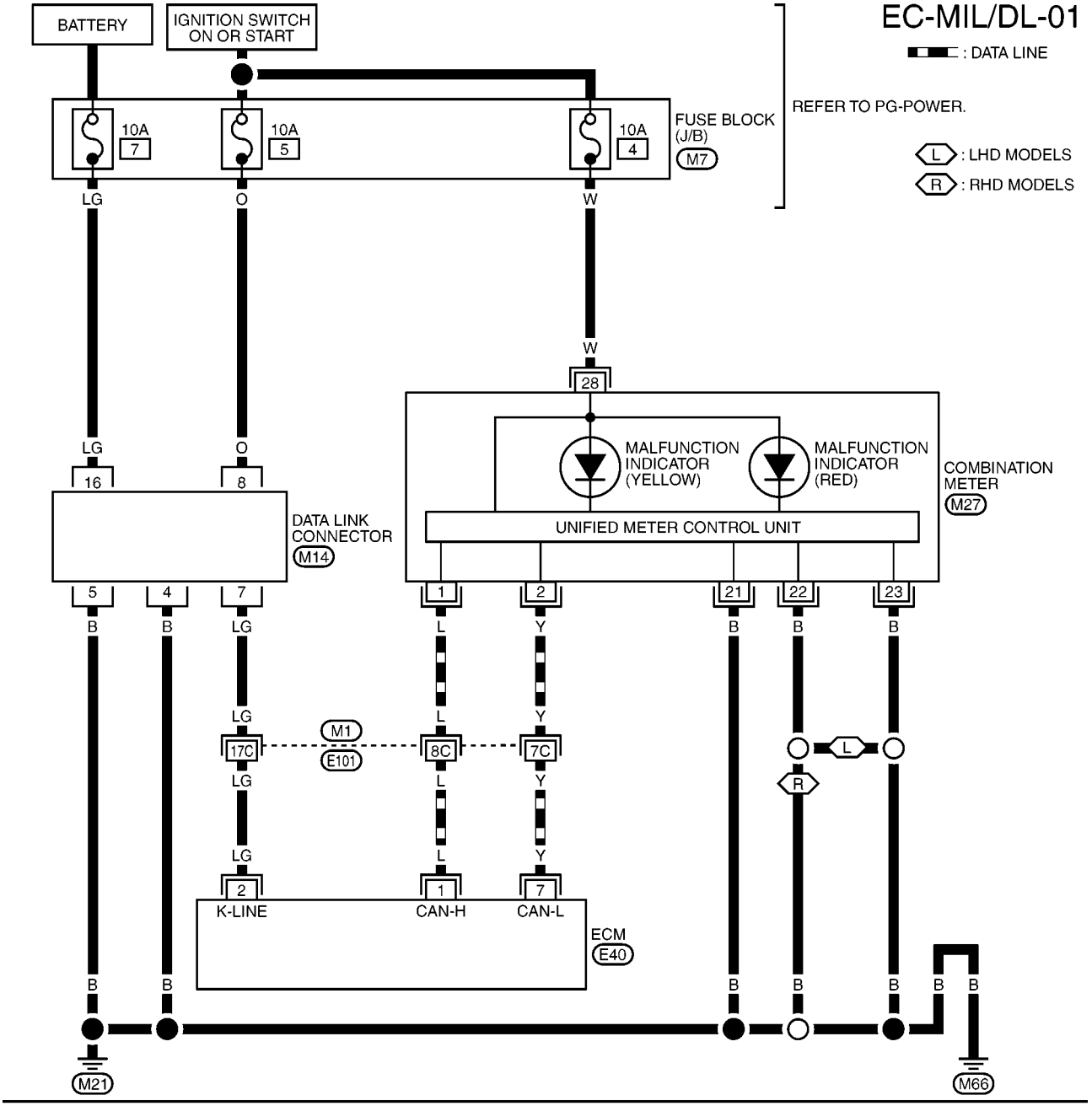

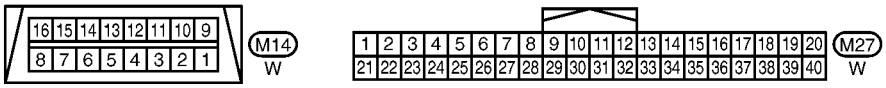

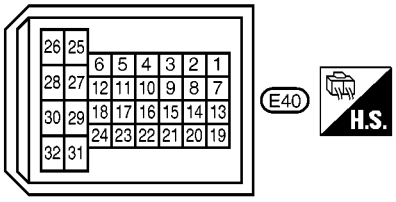

REFER TO THE FOLLOWING.
M1 - SUPER MULTIPLE JUNCTION (SMJ)
M7 - FUSE BLOCK - JUNCTION BOX (J/B)

MBWA1569E

SERVICE DATA AND SPECIFICATIONS (SDS)

PFP:00100

BBS004U1

Vehicles	Engines							
	Type	Suffix	Bore (mm, in)	Stroke (mm, in)	Displacement cm 3 (cu in)	Compression ratio	Catalytic converter	Emission control standard
E11	K9K	274 276	76 (2.99)	80.5 (3.17)	1,461 (89.15)	18.25/1	228	Euro 4

ENGINE SPEED (rpm)			SMOKE OPACITY	
IDLE SPEED	Max. - no load	Max. - under load	Homologation value	Max. - legal
800 ± 50	4,500 ± 150	5,000 ± 150	2.26 m^{-1} (46%)	3 m^{-1} (73%)

DESCRIPTION	MARQUE/TYPE	SPECIAL NOTES
High pressure pump	DELPHI	Located on the high pressure pump 0 to 1,400 bars continuous pressure
Fuel rail fuel pressure sensor	DELPHI	Incorporated into the fuel rail Non measurable resistance
Fuel injector	DELPHI	Solenoid injector Maximum pressure 1600 bar Non measurable resistance
Fuel pump	DELPHI	Resistance: 5.3 ± 0.5 Ω at 20°C
ECM	DELPHI	ECM (computer) (112 terminals)
Glow control unit	NAGARES BED 7-12	With pre-postheating function controlled by the ECM
Glow plug	BERU or CHAMPION	Resistance: Less than 0.6 Ω connector disconnected
Accelerator pedal position sensor	CTS	Double track potentiometer Resistance: ● sensor 1: terminals 2 and 4: 1.7 ± 0.9 kΩ ● sensor 2: terminals 5 and 1: 2.4 ± 1.2 kΩ
Intake air temperature sensor	JAEGER	CTN thermistor Resistance: 50,000 ± 6,800 Ω at - 40°C 9,500 ± 900 Ω at - 10°C 2,051 ± 120 Ω at 25°C 810 ± 47 Ω at 50°C 310 ± 17 Ω at 80°C
Fuel pump temperature sensor	DELPHI	Located on the high pressure pump CTN thermistor Resistance: 2.2 kΩ at 25° C
Engine coolant temperature sensor	ELTH	CTN thermistor Resistance: 76,000 ± 7,000Ω at - 40° C 12,500 ± 1,130 Ω at - 10°C 2,252 ± 112 Ω at 25° C 810 ± 40 Ω at 50° C 280 ± 8 Ω at 80° C 115 ± 3 Ω at 110°C 88 ± 2 Ω at 120° C
Crankshaft position sensor	MGI	Variable reluctance sensor Resistance: 760 Ω
Barometric pressure sensor	DELPHI	Built into the ECM
Turbocharger boost sensor	BOSCF/LDF6 20-300	Non measurable resistance
Camshaft position sensor	SAGEM	Hall effect sensor
Knock sensor	SAGEM	Non measurable resistance

DESCRIPTION	MARQUE/TYPE	SPECIAL NOTES
EGR volume control valve	PIERBURG	Resistance: ● terminals 2 and 6: 8 ± 2.3 Ω at 25°C
Turbocharger boost control solenoid valve	BITRON	Resistance: 18.6 ± 1.8 Ω at -30°C 21 ± 2.1 Ω at 23°C 18 ± 1.8 Ω at 110°C